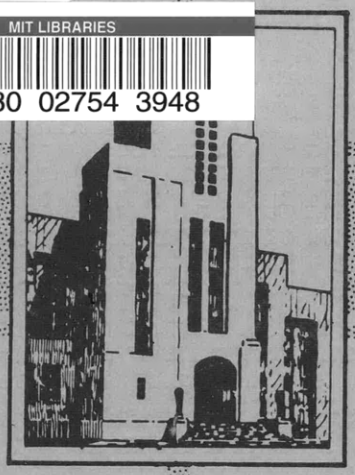

DEPARTMENT OF THE NAVY

DAVID TAYLOR MODEL BASIN

HYDROMECHANICS

○

AERODYNAMICS

○

STRUCTURAL MECHANICS

○

APPLIED MATHEMATICS

USS ALBACORE (AGSS 569) MODES OF RUDDER VIBRATION

by

Ralph C. Leibowitz

STRUCTURAL MECHANICS LABORATORY

RESEARCH AND DEVELOPMENT REPORT

September 1961

Report 1540

USS ALBACORE (AGSS 569) MODES OF RUDDER VIBRATION

by

Ralph C. Leibowitz

September 1961

Report 1540

TABLE OF CONTENTS

LIST OF ILLUSTRATIONS

LIST OF TABLES

NOTATION

A	Cross-sectional area of rudder stock
b	z-coordinate of effective center of attachment of rudder to rudder stock
D_i	Inner diameter of rudder stock
D_o	Outer diameter of rudder stock
E	Modulus of elasticity in tension and compression
f	Natural frequency of vibration of rudder system
G	Modulus of elasticity in shear
h	x-coordinate of effective center of attachment of rudder to rudder stock
I	Area moment of inertia of cross section of rudder stock with respect to an axis coinciding with its diameter
I_x, I_y, I_z	Moments of inertia of rudder mass with respect to the x–, y–, and z–axes
I_{xy}, I_{yz}, I_{zx}	Products of inertia of rudder mass with respect to the xy–, yz–, and zx–axes
J	Polar moment of inertia of area of cross section of rudder stock with respect to an axis perpendicular to the cross section
K	Numerical factor depending on shape of cross section or rudder stock. This factor is 3/4 for a solid circular cross section, 2/3 for a solid rectangular cross section, 1/2 for a hollow circular cross section, and 0.59 for the ALBACORE rudder stock cross section (see Table 6)
K_{ij}	Spring constant of the rudder system relating a restoring force (moment) to a unit displacement (rotation) causing it. The subscripts refer to the three translations and three rotations
l_1	Effective length of rudder stock for computing bending flexibility
l_2	Effective length of rudder stock for computing torsional flexibility
$M^i_{j,c}$	Moment at any cross section; superscript refers to axis about which it acts; subscript j refers to either rudder r or stock b; subscript c, if used, refers to couple at end of stock
m	Effective mass of rudder, including its virtual mass
O	Origin of rudder coordinate system. Position of center of mass of rudder

O'	Effective center of attachment $x = h$, $y = 0$, $z = b$ of rudder to rudder stock. In some of the analyses it is convenient to use O' as the reference origin. In that case the x, y, and z are then coordinates with origin at O'
O''	Origin used in Figures 6 and 11 having x, y, z as its reference coordinates.
P_b	Resultant force acting on end of rudder stock due to displacement of effective center of attachment
P_r	Force acting on rudder at point of attachment due to displacement of that point
Q	Effective center of attachment of rudder to stock
r	Distance from origin O to effective center of attachment O' of rudder to rudder stock
u_z	Equals $\partial u/\partial z$
u_{zz}	Equals $\partial^2 u/\partial z^2$
u, v, w	Deflections of rudder stock along x–, y–, and z–axes, respectively
$\bar{u}$, $\bar{v}$, $\bar{w}$	Small displacements of center of mass of rudder in x-, y-, z-directions, respectively
u_{max}, v_{max}, w_{max}	Displacements of effective center of attachment O' along x, y, z, respectively
V	Shearing force acting on cross section of beam
v_z	Equals $\partial v/\partial z$
v_{zz}	Equals $\partial^2 v/\partial z^2$
x, y, z	Rectangular coordinates with origin O at center of mass of rudder system and with axes taken as principal axes of rudder system
X_b, Y_b, Z_b	Component forces acting on end of rudder stock along x–, y–, and z–axes, respectively, due to displacement of effective center of attachment
X_r, Y_r, Z_r	Component forces acting on rudder at center of attachment along x–, y–, and z–axes, respectively, due to displacement of effective center of attachment
z_n	Value of z at Station T_n
α, β, γ	Small rotations of rudder about x–, y–, and z–axes
Δ	Displacement of effective center of attachment O' of rudder to rudder stock in Figure 7
ϵ	Longitudinal strain in rudder stock
σ	Axial stress in rudder stock

ABSTRACT

With the addition of a motor-propeller system to the lower rudder of USS ALBACORE (AGSS 569) the possibility existed that local resonance frequencies of the rudder within the operating speed range of the ship would occur and hence increase the vibratory response of the ship to propeller-blade forces acting on the rudder. Theoretical analysis indicates, however, that the addition of the motor-propeller system to the rudder would not cause excessive vibrations. This conclusion was verified experimentally.

INTRODUCTION

It was thought appropriate to study the possibility that the addition of a motor and propeller to the lower rudder of USS ALBACORE (AGSS 569) could cause some local frequencies of the rudder to fall within the operating speed range of the ship. These resonance frequencies could effectively increase the vibratory response of the ship to the propeller-blade forces acting on the rudder. If, however, addition of the motor produced only small changes in natural frequencies and modes of vibration of the rudder system within the operating speed range, then installation of the motor would have negligible effect upon the vibratory response of the ship.

In this report theoretical calculations are made of the effect of the added motor-propeller system on the natural frequencies of the rudder and hull. Based on these calculations and on the results of a vibration test on ALBACORE, it is shown that the addition of the motor-propeller system has no significant effect on the vibration response.

THEORETICAL ANALYSIS OF PROBLEM

The six natural frequencies and modes of vibration of the lower rudder were computed on the assumptions that the lower rudder is a rigid body attached through a flexible rudder stock to a rigid hull and that small-vibration theory is applicable. The computations were based on an analysis previously used for computation of the natural frequencies* of a flexibly mounted rigid assembly.[1,2] The method requires evaluation of the inertias and elastic constants of the system. Then, from the natural frequencies of the rudder and hull, considered independently,** the natural frequencies of the combined rudder-hull system were estimated

---

[1]References are listed on page 30.

*Inclusion of the lift force would greatly complicate the calculation and would probably introduce damping, hence no allowance was made for the lift force. The results are strictly correct therefore, only for the stationary ship. The effect of the lift force that may act when the ship is under way should be investigated.

**That is, the natural frequency of the hull without attached rudder and the natural frequency of the rudder attached by its rudder stock to a rigid hull.

roughly by use of the qualitative results of sprung-mass theory.[3,4*]

The natural frequencies and modes of vibration of the rudder were calculated for the following conditions:

a. The activated** rudder vibrating in air, for comparison with the data obtained from tests made in dry dock.

b. The rudder, with and without attached motor, vibrating in water.

In Figure 1 the rudder-motor combination is shown attached (effectively at $x = h$, $y = 0$, $z = b$) to the rudder stock. The rudder stock is assumed to act as a cantilever beam fixed to the hull at $x = h$, $y = 0$, $z = b + l_1$ for computations of beam deflections; it is assumed fixed at $x = h$, $y = 0$, $z = b + l_2$ for computations of torsional deflections.

For these conditions the mass of the rudder system, the moments and products of inertia, and the 21 elastic constants K_{ij} were evaluated for use in computation by the methods of References 1 and 2. The details of these calculations are given in Appendixes A, B, and C.

Formulas for the calculation of the 21 elastic constants are derived in Appendixes B and C and are summarized in Table 5 of Appendix C. In order to evaluate separately the effects of bending and shearing flexibility of the rudder stock on the natural frequencies anu modes of rudder vibration, two sets of elastic parameters were calculated corresponding to the data shown in Table 6 of Appendix C.

In Table 1 are given the natural frequencies and modes of vibration of the rudder system calculated on UNIVAC from the data of Tables 4 and 6 for five conditions:

Without Motor	With Motor	
In Water	In Water	In Air
Flexure and Shear	Flexure and Shear Flexure Only	Flexure and Shear Flexure Only

VIBRATION TESTS OF RUDDER

Vibrations of the lower rudder of ALBACORE were measured on 27 May 1957 while the ship was in dry dock at Key West, Florida. Coupled bending-torsion vibrations were excited by striking the rudder with a timber at a point 64 in. above the base of the rudder and 38 in. aft of the leading edge; see Figure 2. The vibrations were measured by Consolidated

*A more complex analysis can be made to determine the natural frequencies and modes of vibration of the rudder-hull system by making the assumption that the rudder is a rigid body flexibly attached through the rudder stock to an elastic hull. Such an analysis is not made in this report.

**The combination of rudder, motor, and propeller is called the activated rudder.

TABLE 1

Modes of Vibration of Rudder System Computed by UNIVAC

The modal components $\bar{u}$, $\bar{v}$, $\bar{w}$, α, β, γ, are scaled so that the largest component in each mode is unity. All numbers are given to five significant figures followed by the power of ten by which the number must be multiplied, e.g., −3.8677(−02) = −0.038677; 1.0000(00) = 1.0000.

Case 1 - In Water without Motor including Flexure and Shear, h = 17.832 in., b = 11.904 in.							
Frequency, cpm	f	7831.20	2041.08	388.07	2593.92	747.72	353.31
Displacements of Center of Mass, in.	$\bar{u}$	−3.8677(−02)	−1.0000(00)	1.0000(00)	0.0000(00)	0.0000(00)	0.0000(00)
	$\bar{v}$	0.0000(00)	0.0000(00)	0.0000(00)	−1.0000(00)	−1.0000(00)	−1.0000(00)
	$\bar{w}$	1.0000(00)	9.135(−01)	−4.3781(−01)	0.0000(00)	0.0000(00)	0.0000(00)
Rotations, radians	α	0.0000(00)	0.0000(00)	0.000(00)	4.6536(−02)	7.6788(−02)	−1.9188(−02)
	β	−4.0507(−02)	−4.5884(−02)	−2.4459(−02)	0.0000(00)	0.0000(00)	0.0000(00)
	γ	0.0000(00)	0.0000(00)	0.0000(00)	−9.1539(−02)	1.9472(−01)	1.1843(−02)
Case 2 - In Water with Motor including Flexure and Shear, h = 18.228 in., b = 14.088 in.							
Frequency, cpm	f	7474.80	1979.94	348.13	2520.18	732.54	331.20
Displacements of Center of Mass, in.	$\bar{u}$	−3.6221(−02)	−1.0000(00)	1.0000(00)	0.0000(00)	0.0000(00)	0.0000(00)
	$\bar{v}$	0.0000(00)	0.0000(00)	0.0000(00)	−1.0000(00)	−1.0000(00)	−1.0000(00)
	$\bar{w}$	1.0000(00)	−8.6295(−01)	−4.2715(−01)	0.0000(00)	0.0000(00)	0.0000(00)
Rotations, radians	α	0.0000(00)	0.0000(00)	0.0000(00)	4.3554(−02)	7.4873(−02)	−1.8598(−02)
	β	−3.4205(−02)	−4.2464(−02)	−2.3357(−02)	0.0000(00)	0.0000(00)	0.0000(00)
	γ	0.0000(00)	0.0000(00)	0.0000(00)	−8.8156(−02)	1.9544(−01)	1.0896(−02)
Case 3 - In Water with Motor including Flexure only, h = 18.228 in., b = 14.088 in.							
Frequency, cpm	f	7491.00	2072.28	359.07	2637.60	737.40	330.33
Displacements of Center of Mass, in.	$\bar{u}$	−4.0108(−02)	−1.0000(00)	1.0000(00)	0.0000(00)	0.0000(00)	0.0000(00)
	$\bar{v}$	0.0000(00)	0.0000(00)	0.0000(00)	−1.0000(00)	−1.0000(00)	−1.0000(00)
	$\bar{w}$	1.0000(00)	−8.6162(−01)	−4.3084(−01)	0.0000(00)	0.0000(00)	0.0000(00)
Rotations, radians	α	0.0000(00)	0.0000(00)	0.0000(00)	4.3247(−02)	7.6234(−02)	−1.8627(−02)
	β	−3.4362(−02)	−4.1934(−02)	−2.3556(−02)	0.0000(00)	0.0000(00)	0.0000(00)
	γ	0.0000(00)	0.0000(00)	0.0000(00)	−8.6948(−02)	2.0000(−01)	1.1238(−02)
Case 4 - In Air with Motor including Flexure and Shear, h = 17.520 in., b = 11.016 in.							
Frequency, cpm	f	12,582.00	2941.20	585.98	4041.48	1036.38	631.98
Displacements of Center of Mass, in.	$\bar{u}$	−1.2294(−02)	1.0000(00)	1.0000(00)	0.0000(00)	0.0000(00)	0.0000(00)
	$\bar{v}$	0.0000(00)	0.0000(00)	0.0000(00)	−1.0000(00)	−1.0000(00)	−1.0000(00)
	$\bar{w}$	1.0000(00)	3.3301(−01)	−4.5591(−01)	0.0000(00)	0.0000(00)	0.0000(00)
Rotations, radians	α	0.0000(00)	0.0000(00)	0.0000(00)	3.4489(−02)	5.9845(−02)	−2.0058(−02)
	β	−9.9097(−03)	1.7799(−02)	−2.5957(−02)	0.0000(00)	0.0000(00)	0.0000(00)
	γ	0.0000(00)	0.0000(00)	0.0000(00)	−4.8883(−02)	1.6847(−01)	1.1520(−02)
Case 5 - In Air with Motor including Flexure only, h = 17.520 in., b = 11.016 in.							
Frequency, cpm	f	12,591.00	3085.98	586.70	4234.92	1036.80	633.42
Displacements of Center of Mass, in.	$\bar{u}$	−1.3622(−02)	1.0000(00)	1.0000(00)	0.0000(00)	0.0000(00)	0.0000(00)
	$\bar{v}$	0.0000(00)	0.0000(00)	0.0000(00)	−1.0000(00)	−1.0000(00)	−1.0000(00)
	$\bar{w}$	1.0000(00)	3.3281(−01)	−4.5884(−01)	0.0000(00)	0.0000(00)	0.0000(00)
Rotations, radians	α	0.0000(00)	0.0000(00)	0.0000(00)	3.4252(−02)	5.9403(−02)	−2.0220(−02)
	β	−9.9245(−03)	1.7667(−02)	2.6123(−02)	0.0000(00)	0.0000(00)	0.0000(00)
	γ	0.0000(00)	0.0000(00)	0.0000(00)	−4.8401(−02)	1.6865(−02)	1.1576(−02)

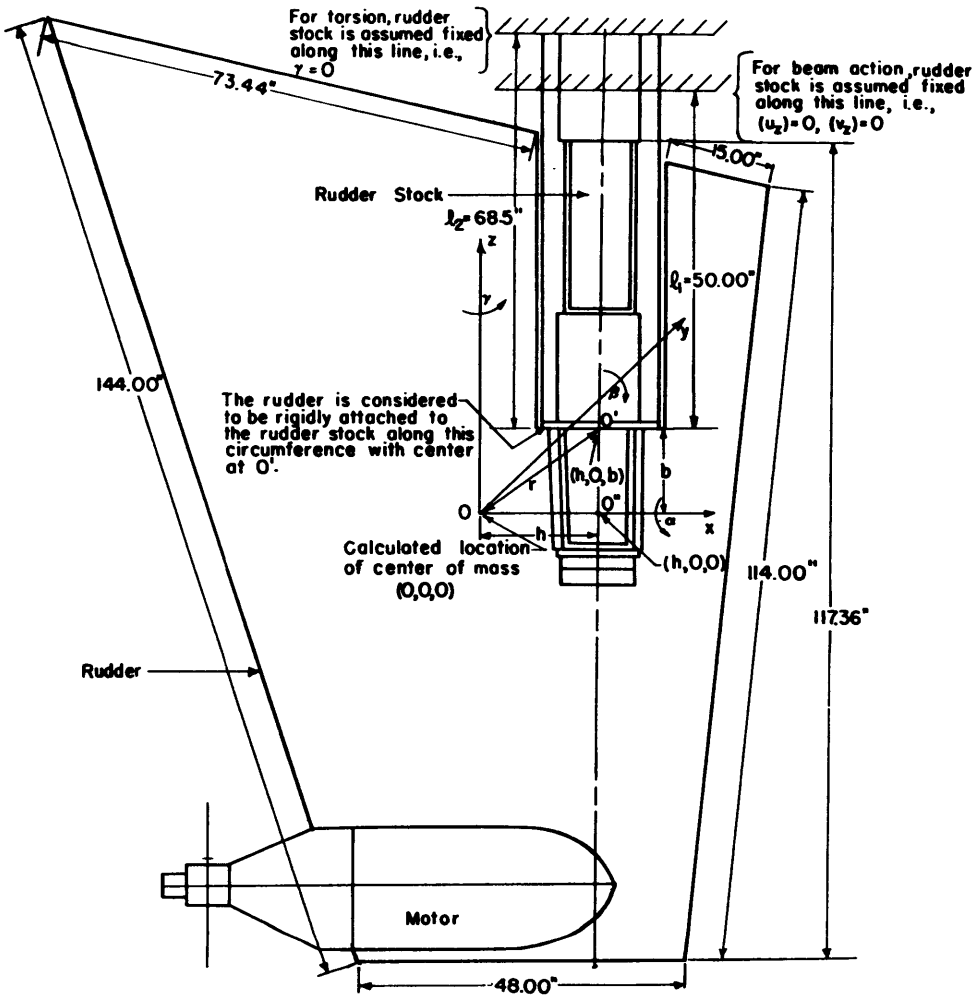

Figure 1 – Rudder System of USS ALBACORE

velocity pickups and recorded on a Sanborn oscillograph. One of the pickups was kept stationary as a reference pickup, and the other was moved from point to point in order to define the mode of vibration. The relative amplitudes of vibrations measured on the lower rudder at points in line with the rudder stock and at corresponding points along the trailing edge are plotted in Figure 3. The natural frequency of the predominant torsion-bending mode of vibration was 810 cpm.

After these measurements were made, the motor was removed from the rudder but the undesirable excessive noise levels still remained.

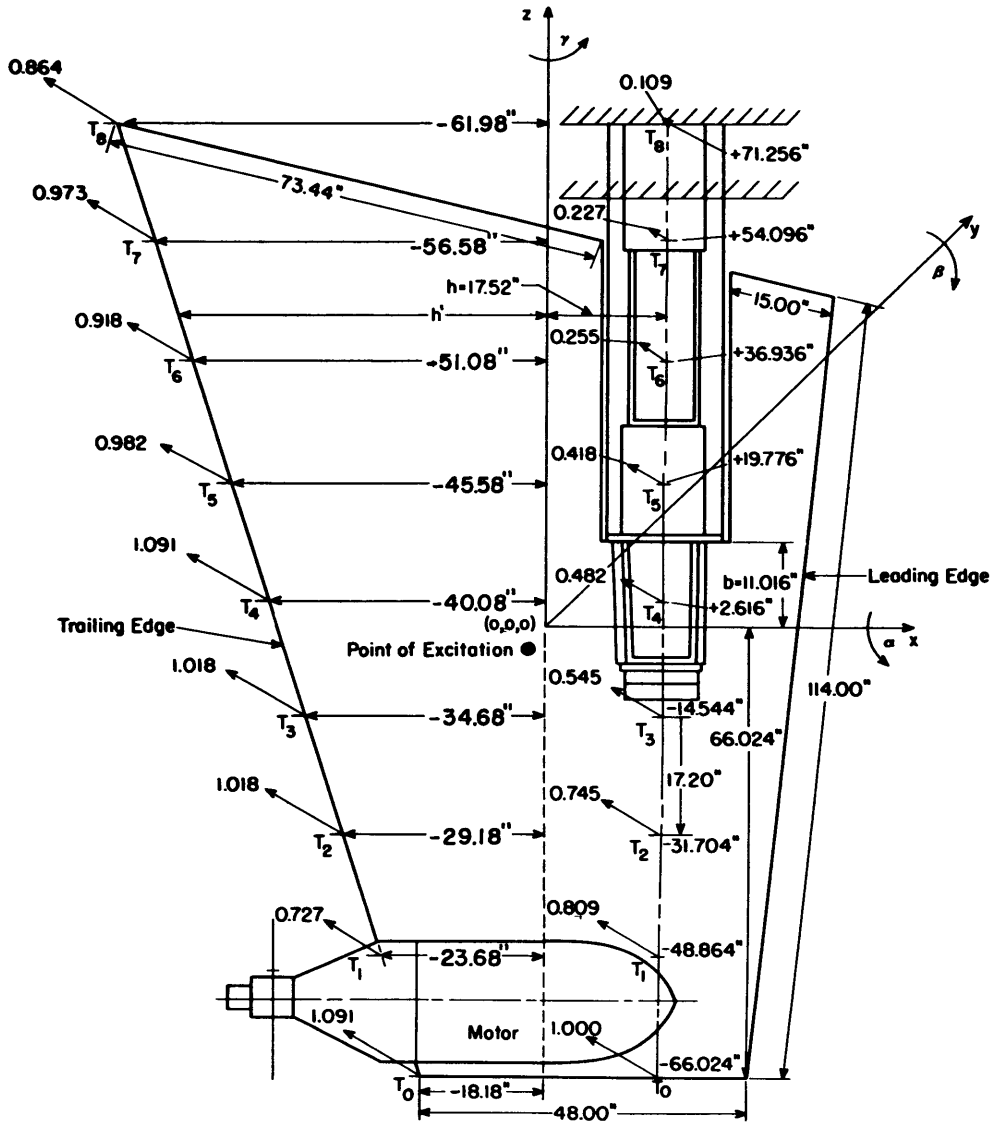

Figure 2 – Relative Athwartship Vibration Amplitude Measured on Lower Rudder in Line with Rudder Stock and along Trailing Edge

The frequency of vibration was 810 cpm. All motions shown are in phase. The displacement at the T_0 position below the rudder is considered as unity. T_0, T_1 ... T_n are stations along the rudder stock and trailing edge where vibrations were measured. The relative amplitude of vibration at any station is labeled and is indicated by the length of the arrow. z_n is the value of z at stations T_n; h' is the horizontal distance from the z-axis to the trailing edge.

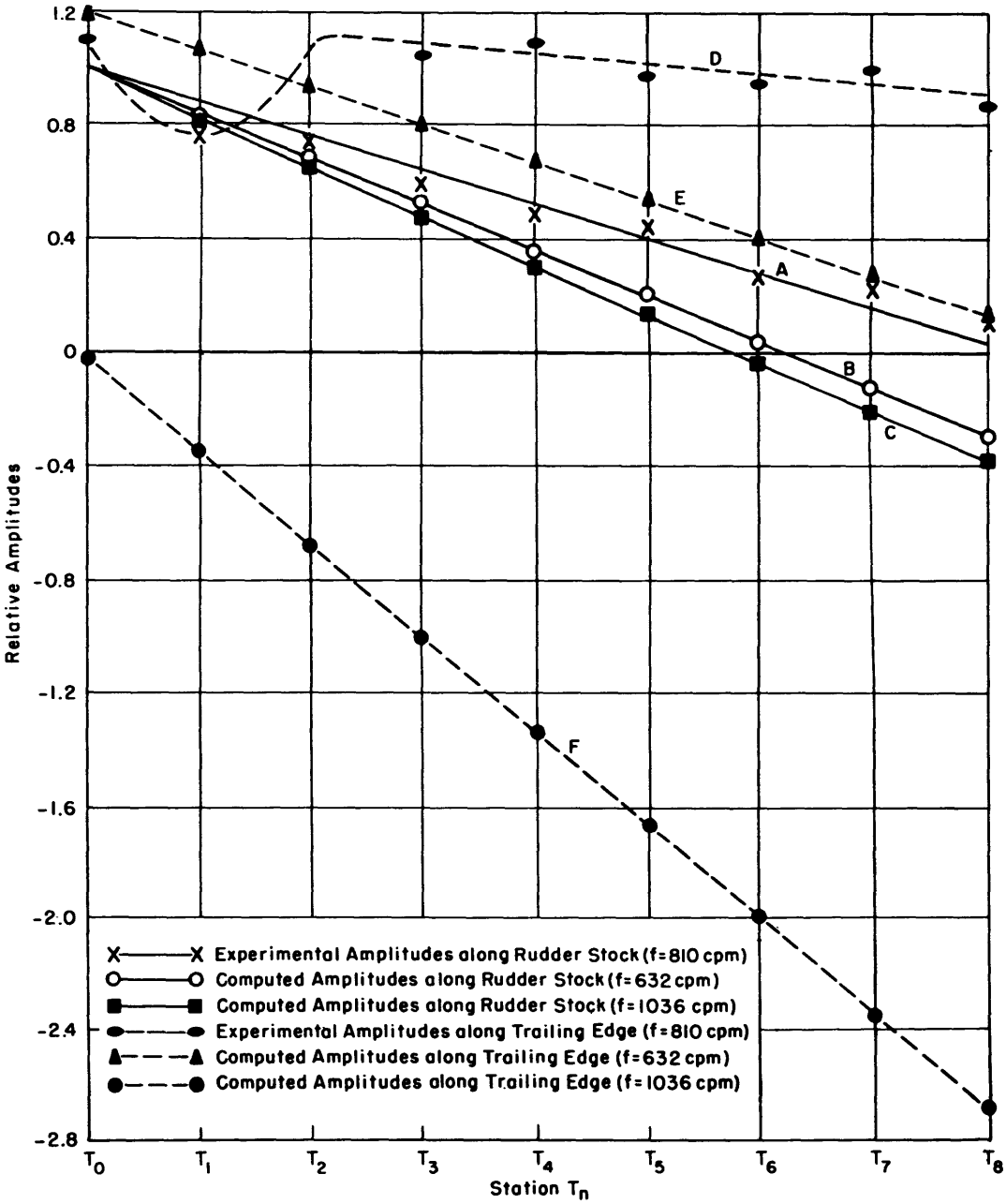

Figure 3a — Computed for Rigid Attachment

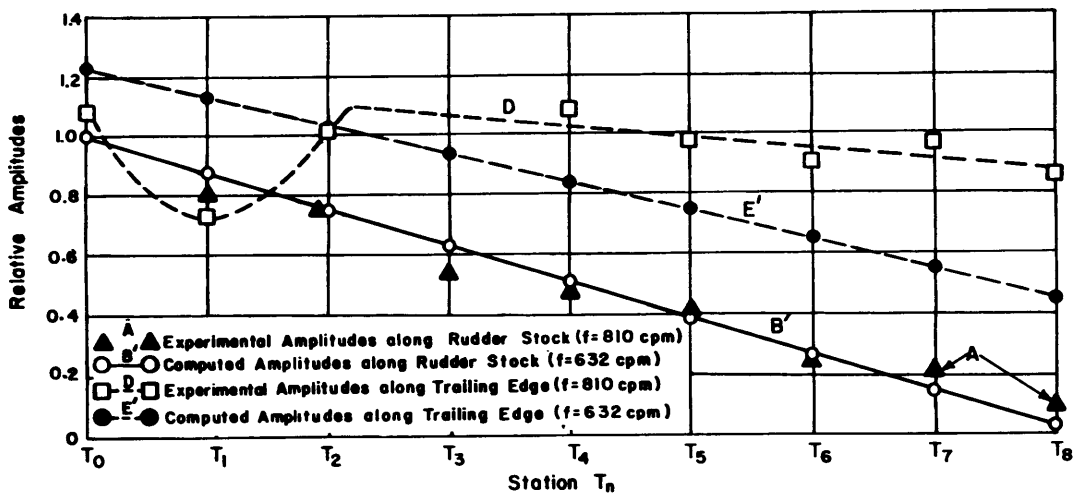

Figure 3b – Corrected for Motion of Point of Attachment

The computed amplitudes along the rudder stock for the 632-cpm mode were translated an amount equal to the difference between the computed amplitude and the point on the experimental curve at Station T_8 in Figure 3a. The computed curve was then pivoted about the point at Station T_8 to obtain curve B' agreeing with the experimental values A. The computed amplitude along the trailing edge was translated the same amount, and the curve was pivoted the same amount as the curve for the rudder stock. The curve E' was thus obtained. It compares favorably with the experimental points D.

Figure 3 – Comparison of Experimental and Computed Modes of Rudder Vibration

The locations of the stations are shown in Figure 2.

DISCUSSION

Table 1 clearly shows that the addition of the motor-propeller system to the rudder has very little effect on the natural frequencies and modes of vibration of the rudder system and, therefore, will have little effect on the combined rudder-hull system. Thus it is concluded that the frequency response of ALBACORE to propeller forces is practically unaffected by the addition of the motor. The observation that the excessive vibrations still persisted after the motor was removed verifies this conclusion.

Comparison of the computed natural frequencies and mode shapes given in Table 1 shows that the effect of shear flexibility of the rudder stock on the vibration characteristics is small.

From Table 1 relative amplitudes were computed for the second and third modes of vibration in air; see Table 2. The mode of rudder vibration excited during the drydock tests is compared with the most nearly "corresponding" calculated modes in Figure 3. Close agreement between the measured and computed modes of vibration is not to be expected because the end condition assumed in the calculation (fixed ended cantilever rudder stock) is not attained in practice. However, the comparison indicates that the predominant mode of vibration excited in the experiments (810 cpm in air) corresponds to the 632-cpm mode of Case 4, Table 1 (rudder vibrating in air), and to the 331-cpm mode of Case 2 (rudder vibrating in water).

TABLE 2

Computation of Relative Amplitudes for Second and Third Modes of Rudder Vibration in Air

T_n (Station)	Second Mode (f = 632 cpm)					Third Mode (f = 1036 cpm)					Experimental (f = 810 cpm)	
	$\bar{v}$ in.	αz_n in.	γh^* in.	$\bar{v}-\alpha z_n+\gamma h$ in.	$\frac{\bar{v}-\alpha z_n+\gamma h}{(\bar{v}-\alpha z_n+\gamma h)_{T_0}}$	$\bar{v}$ in.	αz_n in.	γh^* in.	$\bar{v}-\alpha z_n+\gamma h$ in.	$\frac{\bar{v}-\alpha z_n+\gamma h}{(\bar{v}-\alpha z_n+\gamma h)_{T_0}}$	y in.	$\frac{y}{(y)_{T_0}}$
Along Rudder Stock												
T_0	−1.0	+1.3243	0.2018	−2.1225	+1.000	−1.0	−3.9512	2.9516	+5.9028	+1.000	0.110	1.000
T_1	−1.0	+0.9801	0.2018	−1.7783	+0.838	−1.0	−2.9243	2.9516	+4.8759	+0.826	0.089	0.809
T_2	−1.0	+0.6359	0.2018	−1.4341	+0.676	−1.0	−1.8973	2.9516	+3.8489	+0.652	0.082	0.745
T_3	−1.0	+0.2917	0.2018	−1.0899	+0.513	−1.0	−0.8704	2.9516	+2.8220	+0.478	0.060	0.545
T_4	−1.0	−0.0525	0.2018	−0.7457	+0.351	−1.0	+0.1566	2.9516	+1.7950	+0.304	0.053	0.482
T_5	−1.0	−0.3967	0.2018	−0.4015	+0.189	−1.0	+1.1835	2.9516	+0.7681	+0.130	0.046	0.418
T_6	−1.0	−0.7409	0.2018	−0.0573	+0.027	−1.0	+2.2104	2.9516	−0.2588	−0.044	0.028	0.255
T_7	−1.0	−1.0851	0.2018	+0.2869	−0.135	−1.0	+3.2374	2.9516	−1.2858	−0.218	0.025	0.227
T_8	−1.0	−1.4293	0.2018	+0.6311	−0.297	−1.0	+4.2643	2.9516	−2.3127	−0.392	0.012	0.109
Along Trailing Edge												
T_0	−1.0	+1.3243	−0.2094	−2.5337	1.194	−1.0	−3.9512	−3.0628	−0.1116	−0.019	0.120	1.091
T_1	−1.0	+0.9801	−0.2728	−2.2529	1.061	−1.0	−2.9243	−3.9894	−2.0651	−0.350	0.080	0.727
T_2	−1.0	+0.6359	−0.3362	−1.9721	0.929	−1.0	−1.8973	−4.9160	−4.0187	−0.681	0.112	1.018
T_3	−1.0	+0.2917	−0.3995	−1.6912	0.797	−1.0	−0.8704	−5.8425	−5.9721	−1.012	0.112	1.018
T_4	−1.0	−0.0525	−0.4617	−1.4092	0.664	−1.0	+0.1566	−6.7523	−7.9089	−1.340	0.120	1.091
T_5	−1.0	−0.3967	−0.5251	−1.1284	0.532	−1.0	+1.1835	−7.6789	−9.8624	−1.671	0.108	0.982
T_6	−1.0	−0.7409	−0.5884	−0.8475	0.399	−1.0	+2.2104	−8.6054	−11.8158	−2.002	0.101	0.918
T_7	−1.0	−1.0851	−0.6518	−0.5667	0.267	−1.0	+3.2374	−9.5320	−13.7694	−2.333	0.107	0.973
T_8	−1.0	−1.4293	−0.7140	−0.2847	0.134	−1.0	+4.2643	−10.4418	−15.7061	−2.661	0.095	0.864

*To compute the amplitudes along the rudder stock h = 17.52 in. To compute the amplitudes along the trailing edge the varying values of h' given in Figure 2 are used.

Better correlation of the experimental and computed data is obtained by taking into consideration the fact that the rudder stock is attached to an *elastic* hull so that the point of attachment is given translational and rotational components of motion. If it is assumed that these components are equal in magnitude to the values necessary to make the experimental and corresponding computed (632 cpm) motions along the rudder stock coincide as shown in Figure 3b, then the correlation of experimental and computed data at the trailing edge is improved.

Figure 3 also shows linearity of the measured amplitudes along the rudder stock. This indicates that the assumption of a rigid rudder is acceptable, except for the dip at station n = 1 in Figure 3, near the motor. The nearly constant amplitudes along the trailing edge may be ascribed to the combination of torsion and bending vibrations, the torsional component being greatest where the bending component is least; see Figure 2.

An understanding of the effect of the flexibly attached rudder on the natural frequencies of the combined hull-rudder system and of the critical vibration to be expected may be gained from a study of Table 3, which shows:

a. The significant computed natural frequencies of ALBACORE rudder (Table 1, Case 2).

b. The computed natural frequencies of the ALBACORE hull excluding the sprung inertia effects of the rudder.

The rudder system may be considered as a generalized sprung inertia attached to the hull. The six degrees of freedom of the rudder system will add six new modes of vibration to the combined rudder-hull system which will therefore have natural frequencies different from those computed for the uncoupled rudder and hull systems. It is frequently observed that the natural frequencies of the combined system do not differ too greatly from the frequencies of the separate systems. Thus the computed natural frequencies listed in Table 3 may be considered as rough approximations to some of the natural frequencies of the combined rudder-hull system. Furthermore, since four of the six frequencies lie within the operating speed range of the ship, it is possible that the additional modes of vibration due to the rudder (with or without motor) could cause excessive vibrations.

TABLE 3

Computed Natural Frequencies of Rudder and Hull and Measured Natural Frequencies of Hull

These computations, made on an IBM 704, are in good agreement with experimental results.

Computed Natural Frequencies of Rudder System with Motor Installed. Virtual Mass, Flexure and Shear Included cpm	Computed Horizontal and Vertical Natural Frequencies of Submerged Submarine. Virtual Mass, Flexure and Shear Included cpm		Computed Horizontal and Vertical Natural Frequencies of Surfaced Submarine. Virtual Mass, Flexure and Shear Included cpm	
	Horizontal	Vertical	Horizontal	Vertical
	264	270		
			330	318
331				
348				
	534	540		
			678	636
733				
	834	852		
			1044	984
	1152	1176		
	1488		1434	1362
		1518		1776
			1872	
1980				

CONCLUSIONS

1. The analysis shows that the addition of the motor to the rudder does not change the natural frequencies and modes of vibration appreciably. Therefore, addition of the motor to the lower rudder should not cause excessive propeller-excited vibrations. This conclusion has been verified experimentally.

2. Consideration of the rudder system (with or without motor) as a generalized sprung inertia attached to a hull indicates that six more modes of vibration exist for the combined ALBACORE rudder-hull system than for the hull alone. Four of these modes of vibration may be excited by propeller-blade forces within the operating speed range of the ship and could result in excessive vibrations.

3. The experimental determination helps to identify the predominant torsion-bending mode of the active rudder vibrating in air and in water. Experimentation also shows that the assumption of a rigid rudder is acceptable.

ACKNOWLEDGMENTS

The author wishes to express his appreciation to Dr. N.H. Jasper and to Dr. W.J. Sette for their critical and constructive review of this report. Mr. R.T. McGoldrick and Dr. E.H. Kennard made valuable suggestions on the mathematical analysis presented herein. Mrs. B.H. Gesswein and Mr. A.W. McIver assisted in the numerical calculations. The vibration tests were conducted by Mr. J.T. Birmingham.

APPENDIX A

PROCEDURE FOR OBTAINING RUDDER PARAMETERS

The following data, obtained from the Portsmouth Naval Shipyard, give the weights of the *component* parts of the lower rudder of ALBACORE with the propulsive motor installed;

Rudder Structure	3909 lb
Wood and Pitch Filling	1618 lb
Rudder Stock*	1750 lb
Propulsive Rudder Structure	416 lb
Trapped Water	379 lb
Propulsive Motor	1125 lb
Total Weight in Air	9207 lb

To this is added the weight of the added virtual water mass which is 19,732 lb, making the total effective weight in water 28,939 lb.

The various components of the rudder (including the motor) were each subdivided into a large number of *sections* in order to calculate the center of mass and the moments and products of inertia of the entire rudder. The center of mass of the material within each section is assumed coincident with the center of area of the section. With this assumption the center of mass of each *component* part was computed. From the centers of mass of the components the center of mass of the rudder in *air* was computed. From the centers of the mass of the components and the virtual mass[5] of the rudder the center of mass of the rudder in water was computed. A coordinate system x, y, z was then constructed with the center of mass of the rudder as its origin (Figure 1). The point of attachment of the rudder to the rudder stock is designated by the coordinates (h, 0, b).

The mass moments and products of inertia were then computed for each *component* in air with respect to the coordinate axes through the rudder center of mass. The component virtual masses** and moments of inertia were computed from formulas in Reference 5. Finally the mass moments and products of inertia of the entire rudder in *air* and in *water* were found by summing the moments and products of inertia of the components. The computed data are given in Table 4.

---

*In the computations the effective mass of the stock was obtained by taking 23 percent of the mass of the portion of the stock of length l_1 and regarding it as placed at the lower end of the stock; see Reference 6.

**To calculate virtual mass for motion in the transverse direction the rudder was approximated by an elliptic cylinder whose major and minor diameters equal the width and breadth of the rudder, respectively, as measured in a horizontal plane through the center of area of the rudder. The height of the cylinder equals the height of the rudder as measured through its center of area perpendicular to its base. The products of inertia of the virtual mass of the rudder about any axis in the plane of symmetry were calculated on the assumption that the virtual mass was concentrated at the center of area of the rudder and that the formulas for a rigid body were applicable.

TABLE 4

Data Computed for Rudder

Quantity	Rudder Condition		
	In Air (With Motor)	In Water (With Motor)	In Water (Without Motor)
$m^*\left(\frac{\text{lb-sec}^2}{\text{in}}\right)$	19.838	70.953	67.604
I_x(in-lb-sec^2)	26,256.0	73,239.0	65,193.0
I_y(in-lb-sec^2)	36,419.0	45,165.0	36,146.0
I_z(in-lb-sec^2)	9,995.0	18,292.0	17,327.0
I_{xy}(in-lb-sec^2)	0	0	0
I_{yz}(in-lb-sec^2)	0	0	0
I_{zx}(in-lb-sec^2)	−2,870.0	−2,811.0	−4,070.0
h (in.)	17.520	18.228	17.832
b (in.)	11.016	14.088	11.904

*Virtual mass of rudder for motion in the transverse plane is approximated by an elliptic cylinder whose vertical plane of symmetry is centered 18.48 in. aft of and 15.24 in. below the point of attachment of rudder to stock. Virtual mass is 51.115 lb-sec^2/in. This value for the virtual mass was used in all computations. The height, major diameter, and minor diameter of the cylinder are 122.40 in., 74.52 in., and 13.56 in., respectively.

APPENDIX B

DERIVATION OF ELASTIC CONSTANTS BASED ON FLEXURE ONLY

All symbols are defined in the NOTATION. Amplification of K_{ij} seems warranted. K_{ij}, the spring or elastic constant, is defined as the negative ratio or restoring force (moment) to the unit displacement (rotation) causing it. K_{ij} is, therefore, the negative ratio of the restoring force (moment) in the i-direction to the unit displacement (rotation) in the j-direction causing it. Forces are those acting at the center of mass; moments are those about the center of mass; displacements are those of the center of mass; rotations are those about the center of mass.

The sign convention used and the relation between forces and moments acting on the rudder and deflected rudder stock in the xz– and yz–planes are shown in Figures 4 and 5, respectively. The moments acting on the rudder are defined as the moments of *all* forces acting on the rudder about an axis through the center of mass. Moments are positive (vectorially) in the directions x, y, and z. Forces X_b and Y_b or end couples $M_{b,c}^x$ and $M_{b,c}^y$ applied to the rudder stock deflect it in directions shown in Figures 4 and 5. Consequently, from the elastic curve equations

$$M_b^y = EIu_{zz} \qquad [1]$$

and

$$M_b^x = EIv_{zz} \qquad [2]$$

The bending moments M_b^x and M_b^y are positive for the deflections shown.

Based upon the superposition theorem the values of the deflection and slope at the lower end of the rudder stock for the case of the end couples and load simultaneously applied are[7]

$$u_{max} = \frac{M_{b,c}^y l_1^2}{2EI} + \frac{X_b l_1^3}{3EI} \qquad [3a]$$

$$(u_z)_{z=0} = \frac{-M_{b,c}^y l_1}{EI} - \frac{X_b l_1^2}{2EI} \qquad [3b]$$

$$v_{max} = \frac{M_{b,c}^x l_1^2}{2EI} + \frac{Y_b l_1^3}{3EI} \qquad [4a]$$

$$(v_z)_{z=0} = -\frac{M_{b,c}^x l_1}{EI} - \frac{Y_b l_1^2}{2EI} \qquad [4b]$$

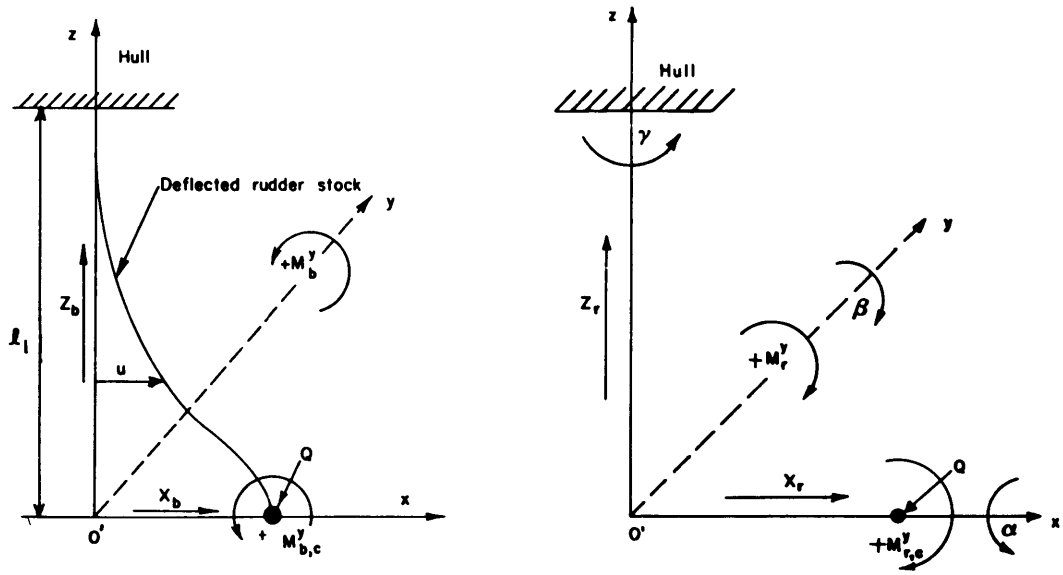

Figure 4a – Rudder Stock

Figure 4b – Rudder

Figure 4 – Positive Forces and Moments Acting on Rudder and Rudder Stock for Beam Deflection in xz-Plane

The elastic curve equation of the rudder stock is $M_b^y = EIu_{zz}$. u, X_b are positive for the deflection shown. u_z is negative for the deflection shown.

$X_b = -X_r$, $Z_b = -Z_r$; $M_{b,c}^y = M_{r,c}^y$ (Newton's Law)

Q is the effective center of attachment of the rudder to the stock.

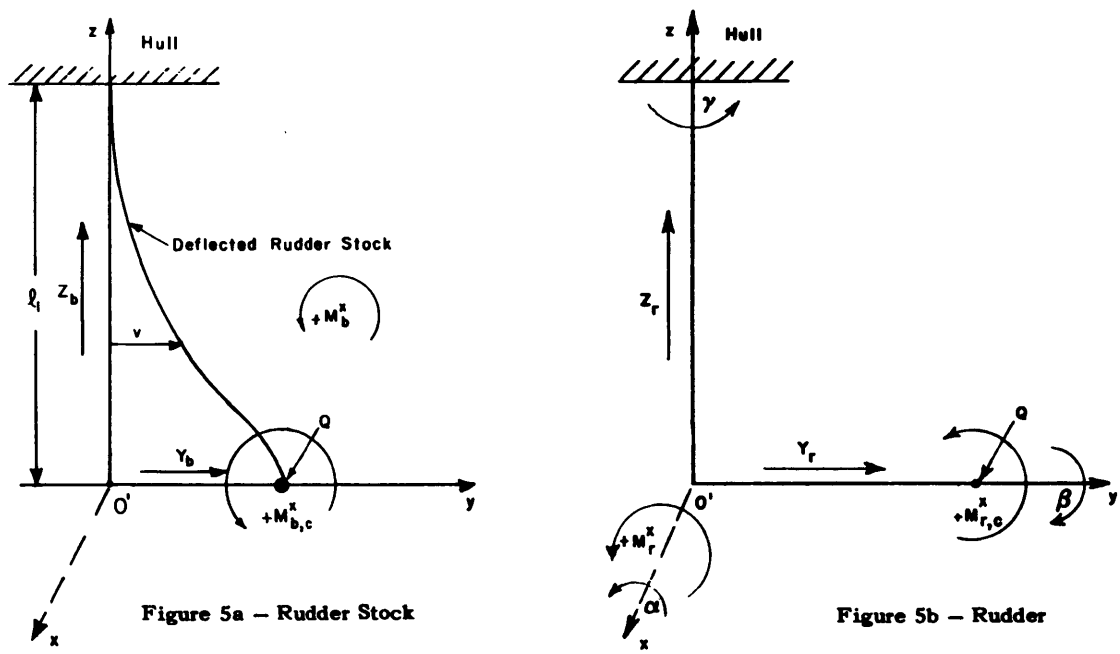

Figure 5a – Rudder Stock

Figure 5b – Rudder

Figure 5 – Positive Forces and Moments Acting on Rudder and Rudder Stock for Beam Deflection in yz-Plane

The elastic curve equation of the rudder stock is $M_b^x = EIv_{zz}$. v, Y_b are positive for the deflection shown. v_z is negative for the deflection shown.

$Y_b = -Y_r$, $Z_b = -Z_r$, $M_{b,c}^x = -M_{r,c}^x$ (Newton's Law).

Q is the effective center of attachment of the rudder to the stock.

Throughout the analysis liberal use is made of the condition that the forces and moments acting on the rudder are equal in magnitude but opposite in direction to the forces and moments acting on the rudder stock at the point of attachment.

The following derivations of elastic constants are based on the assumption of *only* flexural compliance in the rudder stock. The stock is assumed to be *rigid* in shear.

TRANSLATIONS

1. K_{uu}. By definition

$$K_{uu} = -\frac{X_r}{u_{max}} = \frac{X_b}{u_{max}}$$

for the deflection u_{max} of the effective center of attachment of the rudder stock is the linear displacement of the rudder. At this point:

$$(u_z)_{z=0} = 0$$

Hence, from Equations [3b] and [3a]

$$M^{\gamma}_{b,c} = -\frac{X_b l_1}{2} \qquad [5]$$

and

$$u_{max} = \frac{X_b l_1^3}{12EI} \qquad [6]$$

Therefore

$$K_{uu} = \frac{12EI}{l_1^3} \qquad [7]$$

2. K_{vv}. Similarly

$$K_{vv} = -\frac{Y_r}{v_{max}} = \frac{Y_b}{v_{max}} = \frac{12EI}{l_1^3} \qquad [8]$$

3. K_{ww}. By definition

$$K_{ww} = -\frac{Z_r}{w_{max}} = \frac{Z_b}{w_{max}}$$

But

$$E = \frac{\sigma}{\epsilon} = \frac{\dfrac{Z_b}{A}}{\dfrac{w_{max}}{l_2}} \qquad [9]$$

Therefore

$$K_{ww} = \frac{EA}{l_2} \qquad [10]$$

4. K_{uv}, K_{vu}, K_{vw}, K_{wv}, K_{wu}, and K_{uw}. A study of Figures 4 and 5 shows that

$$K_{uv} = K_{vu} = 0 \qquad [11]$$

$$K_{vw} = K_{wv} = 0 \qquad [12]$$

$$K_{wu} = K_{uw} = 0 \qquad [13]$$

ROTATIONS

1. $K_{\alpha\alpha}$. Forces and moments acting on the rudder and on the rudder stock when the rudder is rotated through a small positive angle α are shown in Figure 6. The total moment acting on the rudder about the x-axis through its center of mass is $-bY_r + M^x_{r,c}$. By definition

$$K_{\alpha\alpha} = \frac{bY_r - M^x_{r,c}}{\alpha} = \frac{-bY_b + M^x_{b,c}}{\alpha} \qquad [14]$$

From Equations [4b] and [4a] for the stock

$$-\frac{M^x_{b,c}\, l_1}{EI} - \frac{Y_b\, l_1^2}{2EI} = -\alpha \qquad [15]$$

$$\frac{M^x_{b,c}\, l_1^2}{2EI} + \frac{Y_b\, l_1^3}{3EI} = -b\,\alpha \qquad [16]$$

From which

$$M^x_{b,c} = \frac{12\alpha EI}{l_1^2}\left(\frac{l_1}{3} + \frac{b}{2}\right) \qquad [17]$$

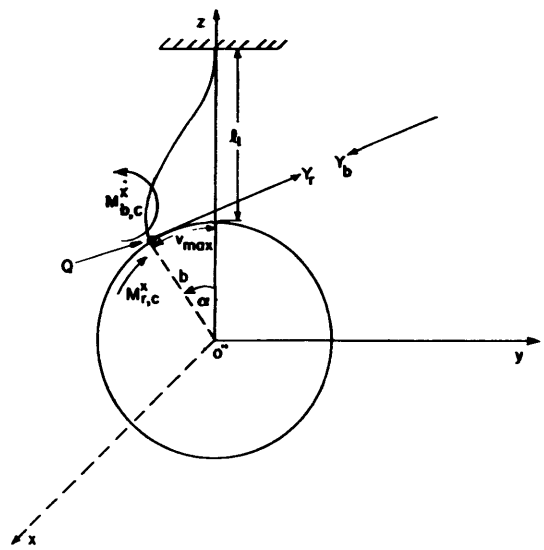

Figure 6 – Forces and Moments Acting on Rudder and Rudder Stock When Rudder Is Rotated through Positive Angle α

Y_r, $M^x_{b,c}$ are positive; Y_b, $M^x_{r,c}$ are negative. $Y_b = -Y_r$, $M^x_{b,c} = -M^x_{r,c}$. At the lower end of the rudder stock $v_z = -\alpha$, $v_{max} = -b\alpha$. Q is the effective center of attachment of the rudder to the stock.

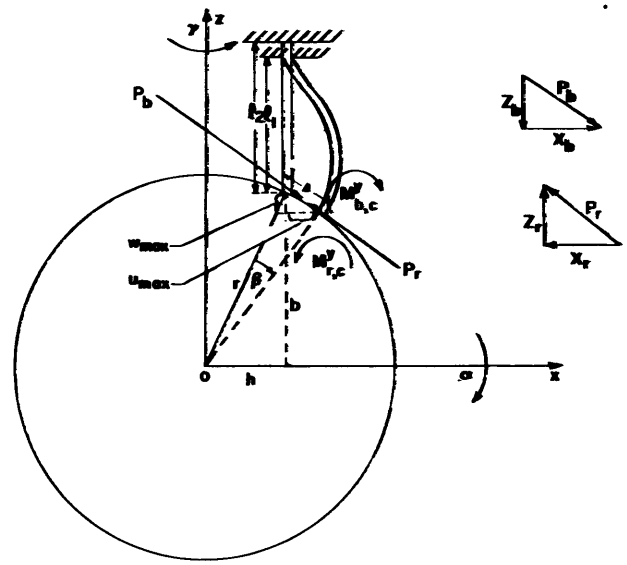

Figure 7 – Forces and Moments Acting on Rudder and Rudder Stock When Rudder Is Rotated through Positive Angle β

X_b, Z_r are positive; X_r, Z_b, $M^y_{r,c}$, $M^y_{b,c}$ are negative. $X_b = -X_r$, $Z_b = -Z_r$, $M^y_{b,c} = M^y_{r,c}$. At the lower end of the rudder stock $u_z = \beta$, $\Delta = r\beta$.

$$Y_b = -\frac{12\alpha EI}{l_1^3}\left(\frac{l_1}{2} + b\right) \qquad [18]$$

Thus

$$K_{\alpha\alpha} = \frac{12EI}{l_1^3}\left(\frac{l_1^2}{3} + b\,l_1 + b^2\right) \qquad [19]$$

2. $K_{\beta\beta}$. The forces and moments acting on the rudder and on the stock for a small positive rotation β are shown in Figure 7. The total moment acting on the rudder about the y-axis through its center of mass is $-hZ_r + bX_r + M^y_{r,c}$. By definition

$$K_{\beta\beta} = \frac{hZ_r - bX_r - M^y_{r,c}}{\beta} = \frac{-hZ_b}{\beta} + \frac{bX_b + M^y_{b,c}}{\beta} \qquad [20]$$

From Equation [10] for the condition that β is the only motion

$$-\frac{hZ_b}{\beta} = -\frac{hEA}{\beta l_2} w_{max} \qquad [21]$$

But, from Figure 7

$$w_{max} = -\frac{h}{r}\Delta = -h\beta \qquad [22]$$

Thus

$$-\frac{hZ_b}{\beta} = \frac{EAh^2}{l_2} \qquad [23]$$

The remaining term of $K_{\beta\beta}$ is obtained from a consideration of the forces and moments acting on the rudder stock which cause it to bend. The moment existing at any cross section of the rudder stock consists of two parts: The moment that would exist if there were no axial force and the moment due to the existence of an axial force. For small β, this latter component is negligible. The remaining terms of $K_{\beta\beta}$ are then found in the same way as the terms of $K_{\alpha\alpha}$ were obtained with $\beta, M_{b,c}^{y}$, X_b substituted for $-\alpha, M_{b,c}^{x}$, and Y_b respectively in Equations [15], [16], [17], and [18]. Thus the final equation for $K_{\beta\beta}$ is

$$K_{\beta\beta} = \frac{EAh^2}{l_2} + \frac{12EI}{l_1^3}\left(\frac{l_1^2}{3} + bl_1 + b^2\right) \qquad [24]$$

3. $K_{\gamma\gamma}$. Figure 8 shows the rotation of the cross section of the bottom of the rudder through a small positive angle γ about the z-axis, i.e., plane xy rotates about z. For small γ there is a linear motion of the stock in the y-direction and a twist through an angle γ of the bottom of the stock about its own axis. Also the axis of the rudder stock is parallel to the z-axis at the point of attachment of the stock to the rudder. Finally, the forces and moments tending to move the stock along the x-axis in the xy-plane may be neglected.

From Equation [8]

$$Y_b = \frac{12EI}{l_1^3} v_{max} = \frac{12EI}{l_1^3}(h\gamma)$$

Therefore

$$K_{\gamma\gamma} = \frac{hY_b}{\gamma} + \frac{M_{b,c}^{z}}{\gamma} = \frac{12EIh^2}{l_1^3} + \frac{GJ}{l_2} \qquad [25]$$

Figure 8 – Forces and Moments Acting on Rudder and Rudder Stock When Rudder is Rotated through Positive Angle γ

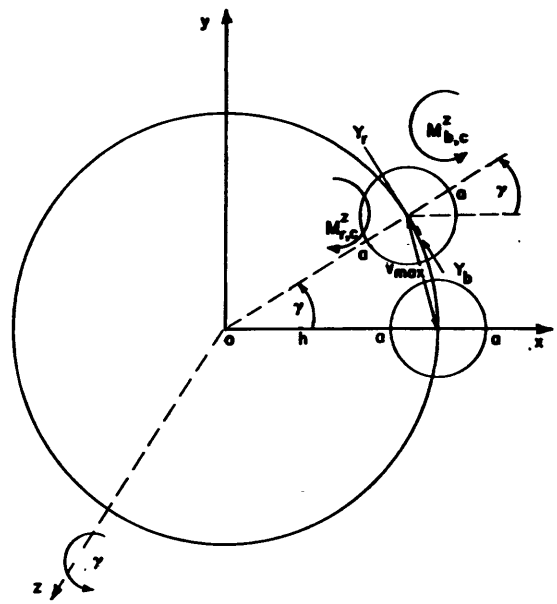

4. $K_{\alpha\beta}$, $K_{\beta\alpha}$, $K_{\beta\gamma}$, and $K_{\gamma\beta}$. A study of Figures 6, 7, and 8 shows that

$$K_{\alpha\beta} = K_{\beta\alpha} = 0 \qquad [26]$$

$$K_{\beta\gamma} = K_{\gamma\beta} = 0 \qquad [27]$$

5. $K_{\gamma\alpha}$ and $K_{\alpha\gamma}$. By definition

$$K_{\gamma\alpha} = K_{\alpha\gamma} = -\frac{hY_r}{a} = \frac{hY_b}{a}$$

From Equation [18]

$$K_{\gamma\alpha} = K_{\alpha\gamma} = -\frac{12EIh}{l_1^3}\left(b + \frac{l_1}{2}\right) \qquad [28]$$

CROSS RELATIONS

1. $K_{u\alpha}$, $K_{\alpha u}$, $K_{v\beta}$, $K_{\beta v}$, $K_{w\gamma}$, and $K_{\gamma w}$. A study of Figures 4 through 8 shows that

$$K_{u\alpha} = K_{\alpha u} = 0 \qquad [29]$$

$$K_{v\beta} = K_{\beta v} = 0 \qquad [30]$$

$$K_{w\gamma} = K_{\gamma w} = 0 \qquad [31]$$

2. $K_{u\beta}$ and $K_{\beta u}$. By definition

$$K_{u\beta} = K_{\beta u} = -\frac{X_r}{\beta} = \frac{X_b}{\beta}$$

By a process similar to that which led to Equation [18]

$$X_b = \frac{12\beta EI}{l_1^3}\left(b + \frac{l_1}{2}\right) \qquad [32]$$

Thus

$$K_{u\beta} = K_{\beta u} = \frac{12EI}{l_1^3}\left(b + \frac{l_1}{2}\right) \qquad [33]$$

3. $K_{v\gamma}$ and $K_{\gamma v}$. By definition

$$K_{v\gamma} = K_{\gamma v} = -\frac{Y_r}{\gamma} = \frac{Y_b}{\gamma}$$

From Equation [8] and the derivation of Equation [25]

$$K_{v\gamma} = K_{\gamma v} = \frac{12EIh}{l_1^3} \qquad [34]$$

Note that the twist produces no resultant force.

4. $K_{w\alpha}$ and $K_{\alpha w}$. A study of Figures 4 through 8 shows that

$$K_{w\alpha} = K_{\alpha w} = 0 \qquad [35]$$

5. $K_{v\alpha}$ and $K_{\alpha v}$. By definition

$$K_{v\alpha} = K_{\alpha v} = -\frac{Y_r}{\alpha} = \frac{Y_b}{\alpha}$$

From Equation [18]

$$K_{v\alpha} = K_{\alpha v} = -\frac{12EI}{l_1^3}\left(b + \frac{l_1}{2}\right) \qquad [36]$$

6. $K_{w\beta}$ and $K_{\beta w}$. By definition

$$K_{w\beta} = K_{\beta w} = -\frac{Z_r}{\beta} = \frac{Z_b}{\beta}$$

From Equation [23]

$$K_{w\beta} = K_{\beta w} = -\frac{EAh}{l_2} \qquad [37]$$

7. $K_{u\gamma}$ and $K_{\gamma u}$. A study of Figures 4 through 8 shows that

$$K_{u\gamma} = K_{\gamma u} = 0 \qquad [38]$$

APPENDIX C

DERIVATION OF ELASTIC CONSTANTS BASED ON FLEXURE AND SHEAR

A shear force v causes the cross section of the rudder stock to warp as shown in Figure 9.

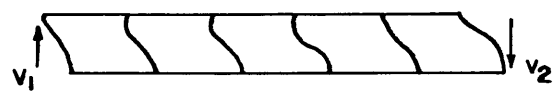

Figure 9 – Shear Force Acting on Rudder Stock

Since the shear force is uniform along the rudder stock, the warping is uniform; hence the longitudinal fibers are neither stretched nor compressed and there is no bending moment generated by this warping. At the ends of the stock the warping results in a change of slope which is commonly denoted by $-V/KAG$. Thus the boundary conditions at the ends assumed in Appendix B must be modified to allow for this change in slope. For a deep uniform beam of circular cross section it has been shown[8] that satisfactory results are obtained in calculations if it is assumed that the component of slope due to shear at the end (i.e., the boundary condition) is $-\frac{4}{3}\frac{V}{AG}$. More generally we may write, in accord with custom, that the slope of this beam is $-V/KAG$ where $K = \frac{3}{4}$.

If the upper end of the rudder stock is fixed to the hull and the lower end is given a translation u, then the stock deflection takes the shape shown in Figure 10.

For a rotation α of the rudder, the shape of the stock deflection is shown in Figure 11.

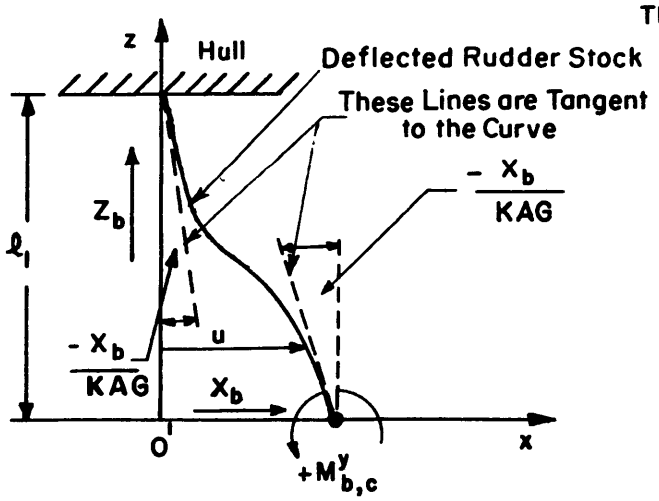

Figure 10 – Forces and Moments Acting on Rudder Stock in xz-Plane, with Bending and Shearing Flexibility

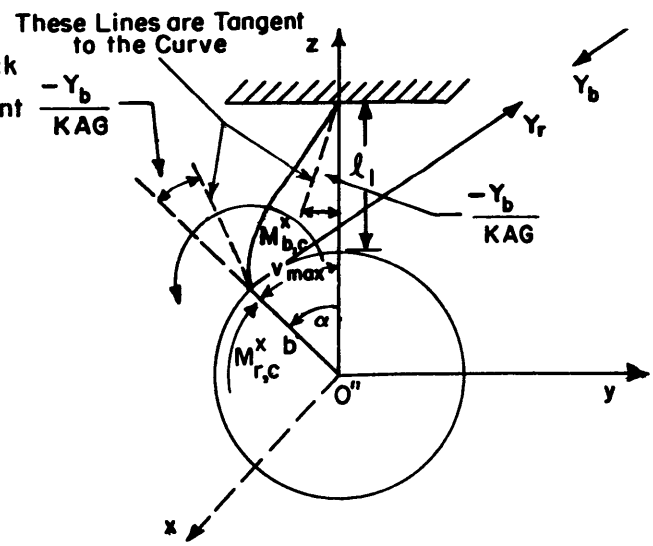

Figure 11 – Forces and Moments Acting on Rudder and Rudder Stock in yz-Plane, Including Bending and Shearing Flexibility of Stock

When the effects of shear are considered, Equations [1] and [2] are solved as before except that boundary conditions used in the derivation of Equations [3a], [3b], [4a], and [4b] are now replaced by

$$u_z = -\frac{X_b}{KAG} \quad \text{at } z = l_1$$

$$u = 0 \quad \text{at } z = l_1$$

$$v_z = -\frac{Y_b}{KAG} \quad \text{at } z = l_1$$

$$v = 0 \quad \text{at } z = l_1$$

Equations [3a], [3b], [4a], and [4b] then become

$$u_{max} = \frac{M_{b,c}^{y} l_1^2}{2EI} + \frac{X_b l_1^3}{3EI} + \frac{X_b l_1}{KAG} \qquad [39a]$$

$$(u_z)_{z=0} = -\frac{M_{b,c}^{y} l_1}{EI} - \frac{X_b l_1^2}{2EI} - \frac{X_b}{KAG} \qquad [39b]$$

$$v_{max} = \frac{M_{b,c}^{x} l_1^2}{2EI} + \frac{Y_b l_1^3}{3EI} + \frac{Y_b l_1}{KAG} \qquad [40a]$$

$$(v_z)_{z=0} = -\frac{M_{b,c}^{x} l_1}{EI} - \frac{Y_b l_1^2}{2EI} - \frac{Y_b}{KAG} \qquad [40b]$$

TRANSLATIONS

1. K_{uu}.

$$(u_z)_{z=0} = -\frac{X_b}{KAG}$$

Equation [39b] gives

$$M_{b,c}^{y} = -\frac{X_b l_1}{2}$$

Substituting this value of $M_{b,c}^{y}$ in Equation [39a] we find

$$K_{uu} = \frac{X_b}{u_{max}} = \frac{1}{\dfrac{l_1^3}{12EI} + \dfrac{l_1}{KAG}} = \frac{12EI}{l_1^3}\left(\frac{1}{1 + \dfrac{12EI}{KAGl_1^2}}\right) \qquad [41]$$

2. K_{vv}. Similarly

$$K_{vv} = \frac{Y_b}{v_{max}} = \frac{12EI}{l_1^3}\left(\frac{1}{1 + \dfrac{12EI}{KAGl_1^2}}\right) \qquad [42]$$

3. K_{ww}. No change is introduced.

4. K_{uv}, K_{vu}, K_{vw}, K_{wv}, K_{wu}, and K_{uw}. Again the values of all these elastic constants are equal to zero.

ROTATIONS

1. $K_{\alpha\alpha}$. Equations [15] and [16] are replaced by

$$-M_{b,c}^{x}\frac{l_1}{EI} - Y_b\frac{l_1^2}{2EI} - \frac{Y_b}{KAG} = -\alpha - \frac{Y_b}{KAG} \qquad [43]$$

$$M_{b,c}^{x}\frac{l_1^2}{2EI} + Y_b\left(\frac{l_1^3}{3EI} + \frac{l_1}{KAG}\right) = -b\alpha \qquad [44]$$

From which

$$M_{b,c}^{x} = \frac{\dfrac{\alpha l_1^2}{EI}\left(\dfrac{l_1}{3} + \dfrac{b}{2}\right) + \dfrac{\alpha l_1}{KAG}}{\dfrac{l_1^4}{12E^2I^2} + \dfrac{l_1^2}{KAGEI}} \qquad [45]$$

$$Y_b = \frac{\dfrac{\alpha l_1}{EI}\left(b + \dfrac{l_1}{2}\right)}{-\dfrac{l_1^4}{12E^2I^2} - \dfrac{l_1^2}{KAGEI}} \qquad [46]$$

Thus

$$K_{\alpha\alpha} = \frac{12EI}{l_1^3}\left(\frac{l_1^2}{3} + bl_1 + b^2 + \frac{EI}{KAG}\right)\left(\frac{1}{1 + \frac{12EI}{l_1^2 KAG}}\right) \qquad [47]$$

2. $K_{\beta\beta}$. Similarly

$$K_{\beta\beta} = \frac{EAh^2}{l_2} + \frac{12EI}{l_1^3}\left(\frac{l_1^2}{3} + b\,l_1 + b^2 + \frac{EI}{KAG}\right)\left(\frac{1}{1 + \frac{12EI}{l_1^2\,KAG}}\right) \qquad [48]$$

where the term EAh^2/l_2 is due to axial displacement.

3. $K_{\gamma\gamma}$. From Equation [42], since $v_{max} = h\gamma$

$$Y_b = \frac{12EI}{l_1^3}\left(\frac{1}{1 + \frac{12EI}{KAG\,l_1^2}}\right)h\gamma \qquad [49]$$

Thus

$$K_{\gamma\gamma} = \frac{12EI}{l_1^3}\left(\frac{h^2}{1 + \frac{12EI}{l_1^2\,KAG}}\right) + \frac{GJ}{l_2} \qquad [50]$$

4. $K_{\alpha\beta}$, $K_{\beta\alpha}$, $K_{\beta\gamma}$, and $K_{\gamma\beta}$. All these elastic constants are still equal to zero.

5. $K_{\gamma\alpha}$ and $K_{\alpha\gamma}$. From Equation [46],

$$K_{\gamma\alpha} = K_{\alpha\gamma} = -\frac{12EI}{l_1^3}\,\frac{h\left(b + \frac{l_1}{2}\right)}{1 + \frac{12EI}{l_1^2 KAG}} \qquad [51]$$

CROSS RELATIONS

1. $K_{u\alpha}$, $K_{\alpha u}$, $K_{v\beta}$, $K_{\beta v}$, $K_{w\gamma}$, and $K_{\gamma w}$. All these elastic constants are still equal to zero.

2. $K_{u\beta}$ and $K_{\beta u}$. By a process similar to that which led to Equation [46]

$$X_b = \frac{\dfrac{\beta l_1}{EI}\left(b + \dfrac{l_1}{2}\right)}{\dfrac{l_1^4}{12E^2I^2} + \dfrac{l_1^2}{KAGEI}} \qquad [52]$$

Thus

$$K_{u\beta} = K_{\beta u} = \frac{12EI}{l_1^3} \cdot \frac{b + \dfrac{l_1}{2}}{1 + \dfrac{12EI}{l_1^2 KAG}} \qquad [53]$$

3. $K_{v\gamma}$ and $K_{\gamma v}$. From Equation [49],

$$K_{v\gamma} = K_{\gamma v} = \frac{12EI}{l_1^3}\left(\frac{h}{1 + \dfrac{12EI}{l_1^2 KAG}}\right) \qquad [54]$$

4. $K_{w\alpha}$ and $K_{\alpha w}$. $K_{w\alpha}$ and $K_{\alpha w}$ are still equal to zero.

5. $K_{v\alpha}$ and $K_{\alpha v}$. From Equation [46],

$$K_{v\alpha} = K_{\alpha v} = -\frac{12EI}{l_1^3}\left(\frac{b + \dfrac{l_1}{2}}{1 + \dfrac{12EI}{l_1^2 KAG}}\right) \qquad [55]$$

6. $K_{w\beta}$ and $K_{\beta w}$. No change is introduced.

7. $K_{u\gamma}$ and $K_{\gamma u}$. $K_{u\gamma}$ and $K_{\gamma u}$ are still equal to zero.

Formulas for the calculations of the 21 elastic constants derived in Appendixes B and C are summarized in Table 5.

The data used in the evaluation of the 21 elastic constants are shown in Table 6.

TABLE 5

Summary of Formulas for Computation of 21 Elastic Constants

Flexure*	Flexure and Shear**
$K_{uu} = \frac{12EI}{l_1^3}$	$K_{uu} = \frac{12EI}{l_1^3}\left(\frac{1}{1+\frac{12EI}{KAGl_1^2}}\right)$
$K_{vv} = \frac{12EI}{l_1^3}$	$K_{vv} = \frac{12EI}{l_1^3}\left(\frac{1}{1+\frac{12EI}{KAGl_1^2}}\right)$
$K_{ww} = \frac{EA}{l_2}$	$K_{ww} = \frac{EA}{l_2}$
$K_{uv} = K_{vu} = 0$	$K_{uv} = K_{vu} = 0$
$K_{vw} = K_{wv} = 0$	$K_{vw} = K_{wv} = 0$
$K_{wu} = K_{uw} = 0$	$K_{wu} = K_{uw} = 0$
$K_{\alpha\alpha} = \frac{12EI}{l_1^3}\left(\frac{l_1^2}{3} + bl_1 + b^2\right)$	$K_{\alpha\alpha} = \frac{12EI}{l_1^3}\left(\frac{l_1^2}{3} + bl_1 + b^2 + \frac{EI}{KAG}\right)\left(\frac{1}{1+\frac{12EI}{KAGl_1^2}}\right)$
$K_{\beta\beta} = \frac{EAh^2}{l_2} + \frac{12EI}{l_1^3}\left(\frac{l_1^2}{3} + bl_1 + b^2\right)$	$K_{\beta\beta} = \frac{EAh^2}{l_2} + \frac{12EI}{l_1^3}\left(\frac{l_1^2}{3} + bl_1 + b^2 + \frac{EI}{KAG}\right)\left(\frac{1}{1+\frac{12EI}{KAGl_1^2}}\right)$
$K_{\gamma\gamma} = \frac{12EIh^2}{l_1^3} + \frac{GJ}{l_2}$	$K_{\gamma\gamma} = \frac{12EI}{l_1^3}\left(\frac{h^2}{1+\frac{12EI}{l_1^2 KAG}}\right) + \frac{GJ}{l_2}$
$K_{\alpha\beta} = K_{\beta\alpha} = 0$	$K_{\alpha\beta} = K_{\beta\alpha} = 0$
$K_{\beta\gamma} = K_{\gamma\beta} = 0$	$K_{\beta\gamma} = K_{\gamma\beta} = 0$

TABLE 5 (continued)

Flexure*	Flexure and Shear**
$K_{\gamma\alpha} = \frac{-12EIh}{l_1^3}\left(b + \frac{l_1}{2}\right) = K_{\alpha\gamma}$	$K_{\gamma\alpha} = \frac{-12EIh}{l_1^3} \frac{\left(b + \frac{l_1}{2}\right)}{1 + \frac{12EI}{l_1^2 KAG}} = K_{\alpha\gamma}$
$K_{u\alpha} = K_{\alpha u} = 0$	$K_{u\alpha} = K_{\alpha u} = 0$
$K_{v\beta} = K_{\beta v} = 0$	$K_{v\beta} = K_{\beta v} = 0$
$K_{w\gamma} = K_{\gamma w} = 0$	$K_{w\gamma} = K_{\gamma w} = 0$
$K_{u\beta} = \frac{12EI}{l_1^3}\left(b + \frac{l_1}{2}\right) = K_{\beta u}$	$K_{u\beta} = \frac{12EI}{l_1^3}\left(\frac{b + \frac{l_1}{2}}{1 + \frac{12EI}{l_1^2 KAG}}\right) = K_{\beta u}$
$K_{v\gamma} = \frac{12EIh}{l_1^3} = K_{\gamma v}$	$K_{v\gamma} = \frac{12EI}{l_1^3}\left(\frac{h}{1 + \frac{12EI}{l_1^2 KAG}}\right) = K_{\gamma v}$
$K_{w\alpha} = K_{\alpha w} = 0$	$K_{w\alpha} = K_{\alpha w} = 0$
$K_{v\alpha} = \frac{-12EI}{l_1^3}\left(b + \frac{l_1}{2}\right) = K_{\alpha v}$	$K_{v\alpha} = \frac{-12EI}{l_1^3}\left(\frac{b + \frac{l_1}{2}}{1 + \frac{12EI}{l_1^2 KAG}}\right) = K_{\alpha v}$
$K_{w\beta} = \frac{-EAh}{l_2} = K_{\beta w}$	$K_{w\beta} = \frac{-EAh}{l_2} = K_{\beta w}$
$K_{u\gamma} = K_{\gamma u} = 0$	$K_{u\gamma} = K_{\gamma u} = 0$

*Rudder stock is assumed to have flexural stiffness only. The rudder stock is assumed to be rigid in shear.

**Rudder stock is assumed to have flexural and shearing stiffness.

TABLE 6

Data Used in Evaluation of 21 Elastic Constants

l_1, in.	50.0	K	0.59
l_2, in.	68.5	A, in.^{2}	67.5933
E, lb/in.^{2}	30×10^6	I, in.^{4}	439.621
G, lb/in.^{2}	12×10^6	J, in.^{4}	879.241
For the rudder stock $D_0 = 9.75$ in, $D_i = 3$ in.			

REFERENCES

1. Bureau of Ships Notice 10462 of 6 July 1956.

2. Vane, F.F., "A Guide for the selection and Application of Resilient Mountings to Shipboard Equipment," David Taylor Model Basin Report 880, Revised Edition (Feb 1958) pp. 98–99.

3. Kennard, E.H., "Forced Vibration of Beams and the Effect of Sprung Masses," David Taylor Model Basin Report 955 (Jul 1955).

4. Leibowitz, R.C., "The Natural Modes and Frequencies of Vertical Vibration of a Beam with an Attached Sprung Mass," David Taylor Model Basin Report 1215 (Aug 1958).

5. Wendel, K., "Hydrodynamic Masses and Hydrodynamic Moments of Inertia," David Taylor Model Basin Translation 260 (Jul 1956) p. 62.

6. Den Hartog, J.P., "Mechanical Vibrations," McGraw-Hill Book Co., New York, N.Y., Second Edition (1940) p. 188.

7. Seely, F.B., "Resistance of Materials," John Wiley and Sons, Inc., New York, N.Y., Second Edition (1946).

8. Timoshenko and Goodier, "Theory of Elasticity," McGraw-Hill Book Co., New York, N.Y., Second Edition (1951).

INITIAL DISTRIBUTION

Copies

20 CHBUSHIPS
- 3 Tech Info Br (Code 335)
- 1 Tech Asst (Code 106)
- 1 Lab Mgt (Code 320)
- 1 Appl Sci (Code 370)
- 2 Sound Ranges & Instrumentation (Code 375)
- 2 Prelim Des Br (Code 420)
- 1 Mach Des (Code 430)
- 1 Mach, Sci, & Res (Code 436)
- 1 Hull Des (Code 440)
- 1 Sci & Res (Code 442)
- 2 Sub Br (Code 525)
- 1 Hull Mach Br (Code 632)
- 2 Special Dev Sec (Code 689A)
- 1 Fixed Systems Sec (Code 689D)

4 CHONR
- 1 Acoustics (Code 411)
  Attn: Mr. M. Lasky
- 2 Mech Br (Code 439)
- 1 Undersea Programs (Code 466)

1 CDR, USNOL, White Oak

1 CO & DIR, USNUSL

1 CO & DIR, USNEL

1 COMOPTEVFOR

2 COMSUBLANT

2 COMSUBPAC

1 COMSUBDEVGRPTWO

1 CO, USS ALBACORE (AGSS 569)

1 NAVSHIPYD PTSMH

1 NAVSHIPYD MARE

1 SUPSHIP, Groton

1 EB Div, Gen Dyn Corp

1 SUPSHIP, NNS
Attn: LCDR R.J. Djikowski

2 CO, USNROTC & NAVADMINU MIT

2 O in C, PGSCOL, Webb

2 Supt, USNAVPGSCOL

1 Hudson Lab

SHIP DYNAMICS DIVISION

Code	Name	AIC*	Remarks	Sig.	Date
✓760	E. F. Noonan				
✓761	E. Buchmann				
✓762	H. F. Alma				
✓762	J. Schneider				
✓762	H. E. Campbell				
✓762	W. R. Fontaine				
✓762	R. E. Murray				
762	C. ~~J.~~ Noonan ~~Macurdy~~				
✓763	W. B. Hinterthan				
✓763	V. S. Hardy				
✓763	N. Mawby				
763	J. T. Birmingham				
763	R. L. Price				
763	R. O. Farmer				
✓763	F. Kessler ~~J. Geiger~~				
763	I. Young				
✓765	J. W. Church				
766	J. N. Andrews				
✓766	N. K. Bales				
766	F. W. Palmer				
✓767	S. E. Lee				
✓767	S. L. Chuang				
✓771	R. C. Leibowitz				
✓771	A. V. Davis				
✓771	A. Kilcullen				
✓	MCK				

* A = Action, I = Information, C = Comment.

aylor Model Basin. Report 1540.
ALBACORE (AGSS 569) MODES OF RUDDER VIBRATION,
h C. Leibowitz. Sep 1961. v, 31p. illus., graphs, tables.
UNCLASSIFIED

he addition of a motor-propeller system to the lower rud-
SS ALBACORE (AGSS 569) the possibility existed that
sonance frequencies of the rudder within the operating
nge of the ship would occur and hence increase the vi-
esponse of the ship to propeller-blade forces acting on
er. Theoretical analysis indicates, however, that the
of the motor-propeller system to the rudder would not
ccessive vibrations. This conclusion was verified
entally.

1. Rudders--Vibration--Theory
2. Rudders--Vibration--Measurement
3. Rudder-hull systems--Vibration--Theory
4. ALBACORE (U.S. auxiliary submarine AGSS 569)
I. Leibowitz, Ralph C.

David Taylor Model Basin. Report 1540.
USS ALBACORE (AGSS 569) MODES OF RUDDER VIBRATION, by Ralph C. Leibowitz. Sep 1961. v, 31p. illus., graphs, tables, refs.
UNCLASSIFIED

With the addition of a motor-propeller system to the lower rudder of USS ALBACORE (AGSS 569) the possibility existed that local resonance frequencies of the rudder within the operating speed range of the ship would occur and hence increase the vibratory response of the ship to propeller-blade forces acting on the rudder. Theoretical analysis indicates, however, that the addition of the motor-propeller system to the rudder would not cause excessive vibrations. This conclusion was verified experimentally.

1. Rudders--Vibration--Theory
2. Rudders--Vibration--Measurement
3. Rudder-hull systems--Vibration--Theory
4. ALBACORE (U.S. auxiliary submarine AGSS 569)
I. Leibowitz, Ralph C.

aylor Model Basin. Report 1540.
LBACORE (AGSS 569) MODES OF RUDDER VIBRATION,
C. Leibowitz. Sep 1961. v, 31p. illus., graphs, tables.
UNCLASSIFIED

ie addition of a motor-propeller system to the lower rud-
SS ALBACORE (AGSS 569) the possibility existed that
onance frequencies of the rudder within the operating
nge of the ship would occur and hence increase the vi-
esponse of the ship to propeller-blade forces acting on
er. Theoretical analysis indicates, however, that the
of the motor-propeller system to the rudder would not
cessive vibrations. This conclusion was verified
ntally.

1. Rudders--Vibration--Theory
2. Rudders--Vibration--Measurement
3. Rudder-hull systems--Vibration--Theory
4. ALBACORE (U.S. auxiliary submarine AGSS 569)
I. Leibowitz, Ralph C.

David Taylor Model Basin. Report 1540.
USS ALBACORE (AGSS 569) MODES OF RUDDER VIBRATION, by Ralph C. Leibowitz. Sep 1961. v, 31p. illus., graphs, tables, refs.
UNCLASSIFIED

With the addition of a motor-propeller system to the lower rudder of USS ALBACORE (AGSS 569) the possibility existed that local resonance frequencies of the rudder within the operating speed range of the ship would occur and hence increase the vibratory response of the ship to propeller-blade forces acting on the rudder. Theoretical analysis indicates, however, that the addition of the motor-propeller system to the rudder would not cause excessive vibrations. This conclusion was verified experimentally.

1. Rudders--Vibration--Theory
2. Rudders--Vibration--Measurement
3. Rudder-hull systems--Vibration--Theory
4. ALBACORE (U.S. auxiliary submarine AGSS 569)
I. Leibowitz, Ralph C.

aylor Model Basin. Report 1540.
LBACORE (AGSS 569) MODES OF RUDDER VIBRATION,
C. Leibowitz. Sep 1961. v, 31p. illus., graphs, tables,
UNCLASSIFIED

he addition of a motor-propeller system to the lower rud-
SS ALBACORE (AGSS 569) the possibility existed that
onance frequencies of the rudder within the operating
nge of the ship would occur and hence increase the vi-
esponse of the ship to propeller-blade forces acting on
er. Theoretical analysis indicates, however, that the
of the motor-propeller system to the rudder would not
cessive vibrations. This conclusion was verified
ntally.

1. Rudders--Vibration--Theory
2. Rudders--Vibration--Measurement
3. Rudder-hull systems--Vibration--Theory
4. ALBACORE (U.S. auxiliary submarine AGSS 569)
I. Leibowitz, Ralph C.

David Taylor Model Basin. Report 1540.
USS ALBACORE (AGSS 569) MODES OF RUDDER VIBRATION, by Ralph C. Leibowitz. Sep 1961. v, 31p. illus., graphs, tables, refs.
UNCLASSIFIED

With the addition of a motor-propeller system to the lower rudder of USS ALBACORE (AGSS 569) the possibility existed that local resonance frequencies of the rudder within the operating speed range of the ship would occur and hence increase the vibratory response of the ship to propeller-blade forces acting on the rudder. Theoretical analysis indicates, however, that the addition of the motor-propeller system to the rudder would not cause excessive vibrations. This conclusion was verified experimentally.

1. Rudders--Vibration--Theory
2. Rudders--Vibration--Measurement
3. Rudder-hull systems--Vibration--Theory
4. ALBACORE (U.S. auxiliary submarine AGSS 569)
I. Leibowitz, Ralph C.

aylor Model Basin. Report 1540.
LBACORE (AGSS 569) MODES OF RUDDER VIBRATION,
C. Leibowitz. Sep 1961. v, 31p. illus., graphs, tables,
UNCLASSIFIED

he addition of a motor-propeller system to the lower rud-
SS ALBACORE (AGSS 569) the possibility existed that
onance frequencies of the rudder within the operating
nge of the ship would occur and hence increase the vi-
esponse of the ship to propeller-blade forces acting on
er. Theoretical analysis indicates, however, that the
of the motor-propeller system to the rudder would not
cessive vibrations. This conclusion was verified
ntally.

1. Rudders--Vibration--Theory
2. Rudders--Vibration--Measurement
3. Rudder-hull systems--Vibration--Theory
4. ALBACORE (U.S. auxiliary submarine AGSS 569)
I. Leibowitz, Ralph C.

David Taylor Model Basin. Report 1540.
USS ALBACORE (AGSS 569) MODES OF RUDDER VIBRATION, by Ralph C. Leibowitz. Sep 1961. v, 31p. illus., graphs, tables, refs.
UNCLASSIFIED

With the addition of a motor-propeller system to the lower rudder of USS ALBACORE (AGSS 569) the possibility existed that local resonance frequencies of the rudder within the operating speed range of the ship would occur and hence increase the vibratory response of the ship to propeller-blade forces acting on the rudder. Theoretical analysis indicates, however, that the addition of the motor-propeller system to the rudder would not cause excessive vibrations. This conclusion was verified experimentally.

1. Rudders--Vibration--Theory
2. Rudders--Vibration--Measurement
3. Rudder-hull systems--Vibration--Theory
4. ALBACORE (U.S. auxiliary submarine AGSS 569)
I. Leibowitz, Ralph C.