58

RESTRICTED

THE DAVID W. TAYLOR MODEL BASIN

UNITED STATES NAVY

THE TAYLOR MODEL BASIN DIAPHRAGM BLAST GAGE

BY B. SUSSHOLZ

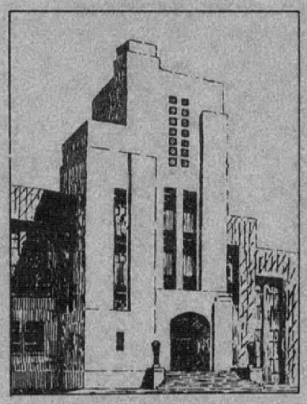

~~CONFIDENTIAL~~

42

DECEMBER 1943

REPORT 508

NAVY DEPARTMENT

DAVID TAYLOR MODEL BASIN

WASHINGTON, D.C.

RESTRICTED

The contents of this report are not to be divulged or referred to in any publication. In the event information derived from this report is passed on to officer or civilian personnel, the source should not be revealed.

REPORT 508

THE TAYLOR MODEL BASIN DIAPHRAGM BLAST GAGE

BY B. SUSSHOLZ

DECEMBER 1943

PERSONNEL

Much of the early work on this gage was done by Dr. J.M. Frankland, at that time a member of the David Taylor Model Basin staff. The research was continued to its present stage by Benjamin Sussholz of the Taylor Model Basin. The report was written by Mr. Sussholz.

NOTATION

ϵ_t	Tangential strain
ϵ_r	Radial strain
ϵ_0	Strain at center of diaphragm
r	Distance from center of diaphragm
a	Radius of diaphragm
t	Thickness of diaphragm
μ	Poisson's ratio
p	Force per unit area
Δp	Excess pressure applied to the gage
E	Modulus of elasticity
l	Variable length of strain-gage wire
Δl	Extension of wire
L_0	Definite wire length
b	Spacing of wires between wire centers
b_m	Maximum spacing of wires
R	Electrical resistance
γ	Resistance per unit length of wire
G	Resistance sensitivity constant of wire
f	Natural frequency
g	Acceleration due to gravity
ρ	Weight density
S	Strain sensitivity
P	Pressure at elastic limit of diaphragm
β	Temperature coefficient
n	Number of free vibration cycles
λ	Per cent critical damping
m	Mass of diaphragm
k	Stiffness of diaphragm
α	Acceleration
V	Voltage
I	Current

DIGEST*

A diaphragm type of blast gage developed at the David Taylor Model Basin is shown in Figure 7. This gage employs a thin circular plate or diaphragm with a thick integral rim as the pressure-sensitive element. The motion of the diaphragm is recorded by a wire-resistance or metalectric strain gage cemented to the side of the diaphragm opposite the blast.

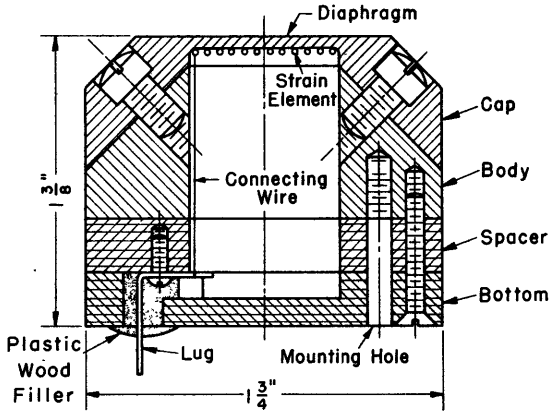

Figure 7 - Section through Blast Gage

The diaphragm acts as a flat, fixed-edge, circular plate with a characteristic deflection pattern and a natural frequency dependent on its composition, thickness, and diameter and with an inherent degree of mechanical damping. The strain-sensitive element cemented to the diaphragm consists of a single layer, spirally-wound, non-inductive wire coil. The winding has generally been of insulated Advance resistance wire, 1 mil in diameter, with a resistance of 300 ohms per foot. Two cementing materials found to be satisfactory were Glyptal and Duco cement.

When the diaphragm is deflected inward toward the gage body by a positive pressure, the wire of the strain gage is subjected to tension which increases its electrical resistance. When the diaphragm is pulled outward from the gage body by a negative pressure the wire is subjected to compression which decreases its resistance. Since the strain gage is located at a distance from the neutral plane of the diaphragm, its strains reverse sign as the diaphragm passes through its mean position.

The elastic strains in a clamped diaphragm, including their distribution and magnitude under the influence of static normal pressures, are known quite definitely (5) (6).** The radial bending strains of a clamped diaphragm reverse in direction between the clamped edge and the center of the diaphragm. The tangential strains increase continually from the clamped edge to the center of the diaphragm. Because of these facts the metalectric gage is made up in a spiral form which responds to the tangential strains. This type of winding gives the maximum sensitivity for a given diaphragm. By the use of an electrical ballast circuit the resistance changes resulting from

---

* This digest is a condensation of the text of the report, containing a description of all essential features and giving the principal results. It is prepared and included for the benefit of those who cannot spare the time to read the whole report.

** Numbers in parentheses indicate references on page 25 of this report.

the blast pressure changes are transformed into voltage variations which are recorded by a cathode-ray oscillograph.

Theoretical considerations (3) (7) (9) indicate that the response of a linear system to a positive rectangular pressure wave will be identical in form but opposite in direction to its response to a negative pressure wave. A negative pressure wave is used to calibrate the blast gage.

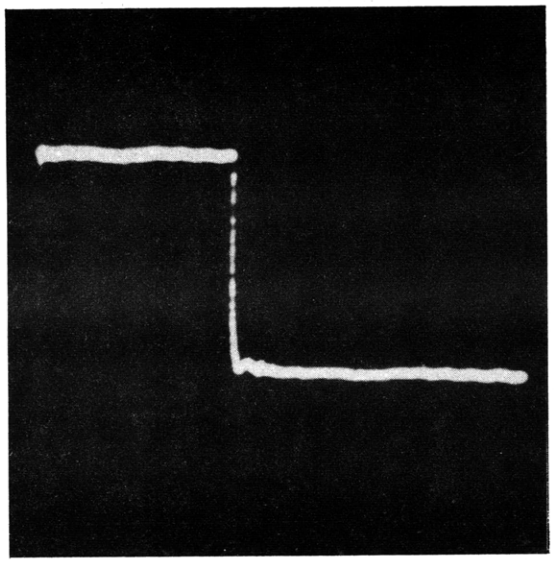

Figure 13 - Sample Pressure Calibration Record

The step down follows abrupt release of a known pressure on the gage. The natural vibrations of the gage are of negligible amplitude because of a relatively long pressure-release time of about 3 milliseconds.

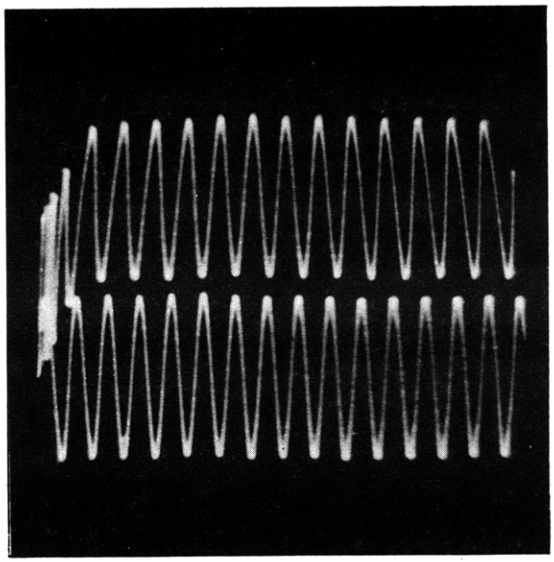

Figure 14 - Voltage and Time Calibration Record

The record shows the response of the oscillograph to a sine-wave signal of known voltage and frequency. The initial left to right sweep in the upper part of the record is the one used; the right to left return sweep in the lower part of the record should be disregarded.

For calibration, the blast gage is enclosed in an air chamber and the pressure is raised to a selected value by a hand pump. When the blast gage reaches a condition of stable equilibrium, as indicated by the beam on the oscillograph screen, the pressure in the chamber is released suddenly by the rupture of a cellophane window in the wall of the chamber. The gage returns rapidly to its original unloaded position, causing a dynamic variation of the resistance of the strain gage. A photographic record of the corresponding voltage change is taken. A sample pressure calibration record is shown in Figure 13, and a voltage calibration record is shown in Figure 14; this latter calibration is necessary to determine the amplitude of the signal in volts.

A special method for calibration of the recording equipment during field tests has been developed. An auxiliary circuit in parallel with the

gage resistance is designed to produce resistance changes similar to those caused by blast pressures applied to the gage. The calibration signal generated in this manner is a rectangular step-pulse which offers the advantage of a determination of the frequency response of the entire recording circuit. Calibration records of this kind, as shown in Figure 13, also indicate whether or not the blast pressure signals are electrically distorted by transmission through the recording equipment. The theory of the method is discussed in Appendix 2. A sample record containing this step is shown in Figure 22a.

The natural frequency of the diaphragm plays an important role in the functioning of this type of blast gage. Diaphragms with high natural frequency respond to transient pressure waves with greater fidelity than diaphragms of low natural frequency. The sensitivity of high-frequency diaphragms is lower than the sensitivity of low-frequency diaphragms. This is the fundamental dilemma met in all gage design - a gage of infinite natural frequency would respond with perfect fidelity and zero sensitivity. Natural frequency vibrations of the diaphragm are excited when the gage is subjected to a blast wave, because of the abrupt pressure rise. The amplitude of these vibrations is governed by the relation between the time of initial rise to peak pressure and the natural period of the gage (2) (3). Actual records contain a superposition of the free and forced motions of the diaphragm. A high-frequency diaphragm will, in general, have low amplitude natural frequency vibrations in the record. The actual blast disturbance, or forced motion of the diaphragm, can be determined by averaging the displacement of the diaphragm over each cycle. A sample blast record is shown in Figure 17.

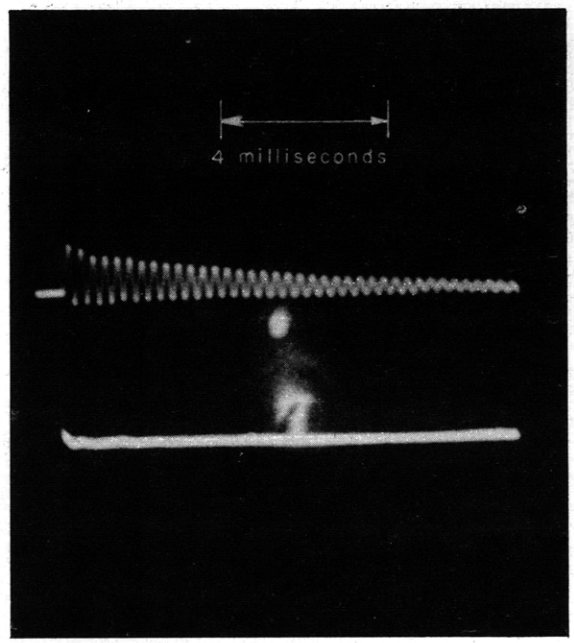

Figure 17 - Record of Blast from 16-Inch, 45-Caliber Gun Taken with a Steel Gage having a 2-Inch Diameter Diaphragm

The frequency of the gage used to obtain this record was 4000 cycles per second. The record runs from left to right along the upper trace and then back from right to left along the lower trace.

The diaphragm blast gages developed at the Taylor Model Basin have a fundamental natural frequency of about 30,000 cycles per second. Their natural damping happens to be around 1 per cent of critical damping. With this amount of damping the natural

frequency vibrations superimposed on the record take about 2 milliseconds to die down to 10 per cent of their initial value. By using electronic filters tuned to the natural frequency of the gage and with properly matched response characteristics it is possible to eliminate all or most of the natural frequency "hash" from the record.

The strain sensitivity of the latest TMB diaphragm blast gages is about 13×10^{-6} ohms per ohm per pound per square inch. Figure 15 on page 13 gives a calibration curve for the gage in volts as a function of pressure.

Blast pressure measurements have been made with bare charges of explosives, large bombs, and guns of various calibers. A number of sample records are shown in Figure 22. The legend under each record indicates the test conditions.

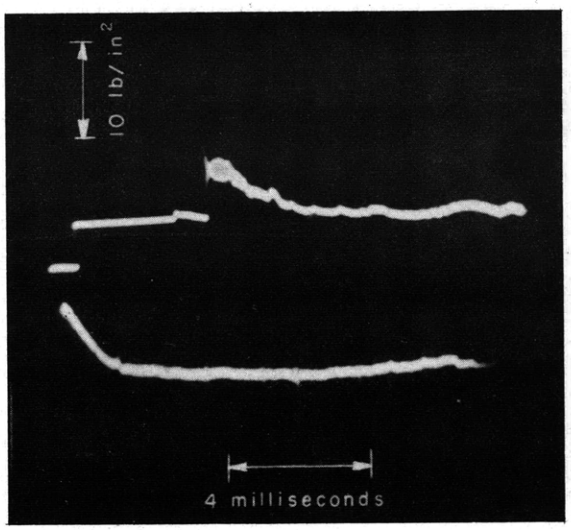

Figure 22a - Gun Blast Record during the Firing of 5-Inch, 38-Caliber Twin Mount

This record was taken with a 26,000-CPS dowmetal gage. The gage was mounted in a 28-inch circular baffle at 23 feet from the muzzle of the nearer gun, and about 3 1/2 feet from the line of fire. The step pulse at the beginning of the record is a calibration signal; see Appendix 2. From the indication of other records the delay time between the firing of the two guns was greater than the duration of the sweep and therefore only the first pulse was recorded.

The pressure duration of this sample record is intended only as an indication of an order of magnitude.

Several precautions have been found by experience to be necessary in the measurement of blast pressure by the TMB diaphragm gage.

1. The body of the gage should be grounded to the shield or to the structure in which it is mounted, as a protection against electrostatic effects.

2. The shield or structure should not carry any of the current passing through the gage. This can be prevented by the use of a 2-conductor shielded cable, since the wire coil is insulated from the body of the gage by the construction.

3. The cable leads should be soldered to the terminals of the gage and fastened firmly so that whipping of the cable will not cause the terminals to vibrate.

4. Irregular line voltage variations should be controlled by use of a variac and voltage regulator.

5. Whenever possible, it is advisable to use a single length of cable without joints from the gage in the field to the ballast box located with the auxiliary recording equipment.

6. Recording equipment should be isolated from shock to minimize the transmission of vibration of the supports.

THE TAYLOR MODEL BASIN DIAPHRAGM BLAST GAGE

ABSTRACT

The theory of operation of the TMB diaphragm blast gage is presented with a series of design curves. The advantages of a spiral-type strain element are indicated.

A detailed discussion is then given of the gage design, auxiliary equipment, calibration technique and gage characteristics such as sensitivity, natural frequency and damping factor. Methods of eliminating undesirable acceleration effects are included.

A number of necessary precautions are noted, and several sample blast pressure records taken in field tests are given.

INTRODUCTION

About three years ago, the David Taylor Model Basin was called upon to measure blast pressures on the flight deck of an aircraft carrier when the main battery guns were fired across the deck at low elevations.

Standard Williams blast gages (1)* were available at that time but it was felt that something better could be developed, which would record in permanent form the true shape of the blast pressure curve as a function of time, known to be of the general form shown in Figure 1.

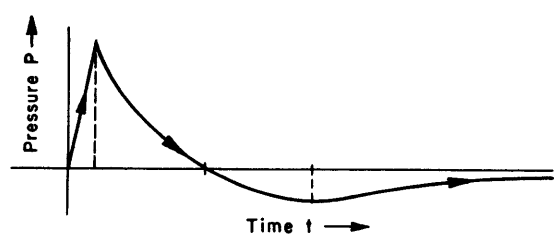

Figure 1 - Typical Curve of Pressure and Time for Gun Blast

This was by no means a new problem, but improved electronic equipment and entirely new strain-recording apparatus furnished new tools which had not been available to previous experimenters.

One such was Wilhelm Schneider who in 1939 reported (2) on the results of extensive work done in Germany with a blast gage consisting of a thin circular membrane with a thick rim, which deflected normal to its surface under the influence of blast.

Schneider, in his consideration of the effects of the blast impulse upon the membrane or diaphragm, which had a natural frequency of vibration of its own in a direction normal to the surface, was led into a rather complete

* Numbers in parentheses indicate references on page 25 of this report.

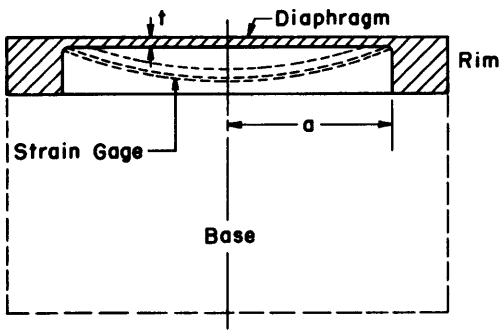

Figure 2 - Schematic Diagram of Diaphragm Gage

Deflection of the diaphragm is exaggerated. It is actually limited to 1/3 of the thickness for linear response.

study of the effects of impact upon simple elastic structures. Dr. J.M. Frankland made a similar study (3) in connection with the aircraft carrier flight deck mentioned earlier, as well as with the diaphragm gage described in this report.

Schneider used a condenser type of pickup to record the motions of his diaphragm; the circuit is shown in his Figure 18 (2). The gage finally evolved at the Taylor Model Basin, as shown in Figures 2 and 6, employed a thin circular plate or diaphragm with a thick integral rim, but the motion of the sensitive element, the diaphragm, was recorded by a wire-resistance or metalectric strain gage (4) attached to the side of the diaphragm opposite the blast. When the diaphragm is deflected inward toward the gage body by a positive pressure the wire of the strain gage is subjected to tension which increases its electrical resistance. When the diaphragm is pulled outward from the gage body by a negative pressure the wire is subjected to compression which decreases its resistance. Since the strain gage is located at a distance from the neutral plane of the diaphragm its strains reverse sign as the diaphragm passes through its mean position.

THEORY OF THE DIAPHRAGM AND THE STRAIN GAGE

When the gage is subjected to a blast pressure impulse, the diaphragm is deformed elastically, owing to the unbalance in pressures acting on the outer and inner surfaces. The elastic strains in the clamped diaphragm, including their distribution and their magnitude under the influence of static normal pressures, are known quite definitely (5) (6). The bending strains developed by this action cause corresponding resistance variations in the strain gage. By the use of an electrical ballast circuit the resulting resistance variations are transformed into voltage variations which are recorded by a cathode-ray oscillograph.

TYPES OF WINDING

Consider the thin circular plate of radius a and thickness t, Figure 2, with its edges fixed and a uniform normal load distributed over the entire surface (5). To insure a linear gage response assume that the normal pressures do not produce stresses in excess of the elastic limit of the material and that the deflections do not exceed 1/3 of the thickness of the diaphragm.

The tangential strain at any distance r from the center is given by

$$\frac{\epsilon_t}{\epsilon_0} = 1 - \frac{r^2}{a^2} \qquad [1]$$

and the radial strain by

$$\frac{\epsilon_r}{\epsilon_0} = 1 - 3\frac{r^2}{a^2} \qquad [2]$$

where ϵ_0 is the strain at the center. This strain is given by

$$\epsilon_0 = \frac{3}{8}(1 - \mu^2)\frac{pa^2}{Et^2} \qquad [3]$$

where μ is Poisson's ratio,
p is the force per unit area, and
E is the modulus of elasticity.

The radial bending strain changes sign at the inflection point $r = a/\sqrt{3} = 0.577a$. A strain gage measuring radial strain should therefore be limited in length to about 0.6 the diameter of the diaphragm.

The tangential strain does not pass through an inflection point along the radius. Therefore the entire surface of the diaphragm is available when a spiral winding is used, as shown in A of Figure 3. However, the area near the rim adds to resistance more than to the elongation of the wire and so is relatively ineffective and therefore generally neglected.

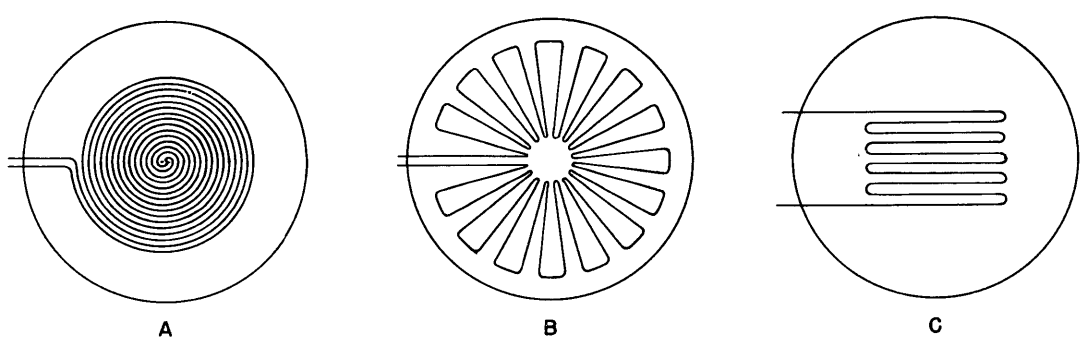

Figure 3 - Diagram of Alternative Strain-Gage Windings

Type A is the kind of winding used with the present model of the diaphragm gage. This type of strain gage is constructed by the Taylor Model Basin. The rosette type of gage, B, has not been considered practical because of the relatively low sensitivity factor. The third form of winding, C, is characteristic of the Baldwin-Southwark Type C metalectric strain gage which was used with the first model of the diaphragm gage.

Simple calculations indicate that a spiral winding offers the advantages of maximum sensitivity for a specified diaphragm. When a definite sensitivity is required spiral winding permits the use of smaller diaphragms with higher natural frequencies than would be permissible otherwise.

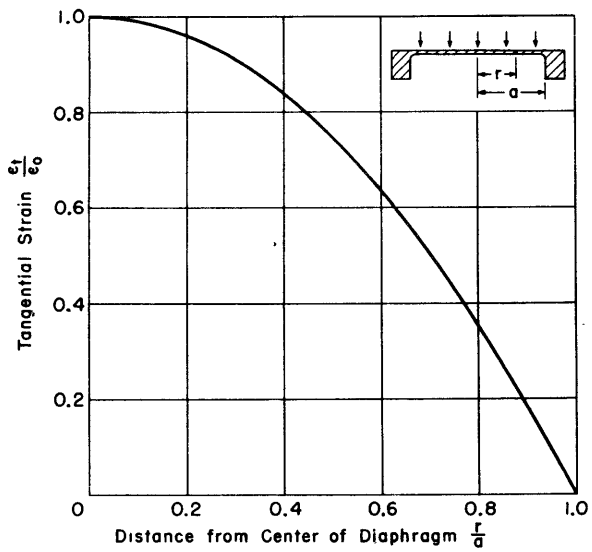

Figure 4 - Curve of Tangential Strain in a Circular Diaphragm Deflected under a Uniformly Distributed Load

$$\frac{\epsilon_t}{\epsilon_0} = 1 - \frac{r^2}{a^2}$$

where ϵ_0 is the strain at the center and ϵ_t is the tangential strain at the radius r.

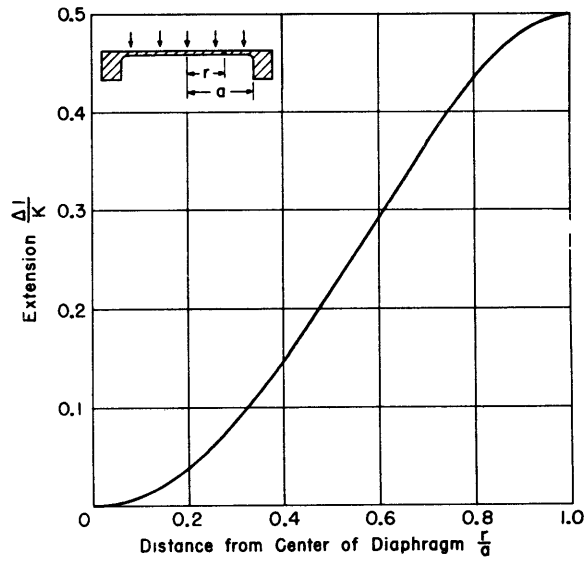

Figure 5 - Extension of Wire in a Spiral Strain Gage when Diaphragm is Deflected under a Uniformly Distributed Load

$$\frac{\Delta l}{K} = \frac{r^2}{a^2}\left(1 - \frac{1}{2}\frac{r^2}{a^2}\right) \qquad K = \pi \frac{a^2}{b} \epsilon_0$$

where b is the spacing of the turns.

A non-dimensional plot of tangential strain on a basis of distance from the center of the diaphragm is shown in Figure 4. For a spiral winding, as shown in A of Figure 3, the total change in length of wire is given by

$$\Delta l = \int_0^l \epsilon_t \, dl \qquad [4]$$

At a distance r from the center the number of turns in an annular ring of width dr would be dr/b, where b is the spacing between the wires. Since the length per turn is $2\pi r$, the element of length dl is given by $dl = \frac{2\pi r}{b} dr$, whence

$$\Delta l = \int_0^r \frac{2\pi}{b} r \epsilon_t \, dr \qquad [5]$$

Substituting for ϵ_t and integrating,

$$\Delta l = \frac{\pi a^2 \epsilon_0}{b} \frac{r^2}{a^2}\left(1 - \frac{r^2}{2a^2}\right) \qquad [6]$$

A plot of this relation between Δl and r, with b constant, is shown in Figure 5. For a spiral winding extending from 0.1 to 0.9 of the radius, about 95 per cent of the possible signal would be obtained.

Radial windings, as shown in B of Figure 3, have the disadvantage that the spacing cannot be uniform, and even covering of the sensitive surface is impossible. Even if an average value of b equal to that for a spiral winding were obtainable on the surface within the inflection circle, Δl would have only 4/5 the value obtained by the spiral, as a simple calculation shows. Since the spiral winding may be extended beyond the inflection circle to yield a still greater signal, it is evident that this type of winding is preferable.

LIMITS OF SENSITIVITY

When a definite resistance R is specified for the gage winding, Δl will have limiting values governed by the spacing between turns. The resistance of the wire is

$$R = \gamma L_0$$

where γ is the resistance per unit length of the wire. For a given length L_0 of the wire

$$r^2 = \frac{bL_0}{\pi}$$

Therefore from Equation [6]

$$\Delta l = L_0 \epsilon_0 \left(1 - \frac{1}{2}\frac{b}{b_m}\right) \qquad [7]$$

where b_m is the maximum spacing possible as determined by $\pi a^2/L_0$. The minimum value of b is the diameter of the wire.

It is evident that a greater signal will be developed for closer windings of the strain gage wire; from Figure 4 this is also true for a concentration of turns near the center. The change in resistance of the strain gage is linearly proportional to the change in length of the wire:

$$\frac{\Delta R}{R} = G\frac{\Delta l}{l}$$

From geometrical considerations alone, $G = 1 + 2\mu$, where μ is the ratio of the transverse contraction to the longitudinal extension, but other influences are known to exist; thus for Advance* wire $G = 2.1$ where G, the dimensionless resistance sensitivity constant, depends upon the type of wire used. The gage sensitivity or fractional change in resistance per unit change of pressure is therefore given by

---

*Advance is a trade name for one of the types of resistance wire commonly used for these gages. It contains approximately 60 per cent copper and 40 per cent nickel.

$$\frac{\Delta R}{R \Delta p} = \frac{3}{8}\left(1 - \mu^2\right) \frac{Ga^2}{Et^2}\left(1 - \frac{1}{2}\frac{r^2}{a^2}\right) \qquad [8]$$

where Δp is the pressure applied to the gage.

The natural frequency of the diaphragm will govern the time-resolving power of the gage. For a circular clamped-edge diaphragm of thickness t the lowest natural frequency (7) is

$$f = \frac{1}{2}\sqrt{\frac{Eg}{\rho}}\,\frac{t}{a^2} \qquad [9]$$

where $\sqrt{Eg/\rho}$ is the velocity of sound in the material and $2a$ is the diameter of the diaphragm. The strain sensitivity S for a spiral winding covering the entire surface is given by

$$S = \frac{\Delta l}{l \Delta p} = \frac{1}{6}\frac{a^2}{Et^2} \qquad [10]$$

Gage sensitivity, as defined by Equation [8], equals the strain sensitivity S times the dimensionless constant of the wire, G.

For a simplification of the expressions in Equations [9] and [10] μ was assumed to be equal to 1/3 and the coefficients rounded to the nearest whole number. For the different materials considered in Figure 6 the values of μ range roughly from 0.25 for steel to 0.37 for bakelite.

Combining Equations [9] and [10] we find that

$$S(fa)^2 = \frac{g}{24\rho} \qquad [11]$$

where ρ is the weight density of the diaphragm. A plot of Equation [11] for various materials is shown in Figure 6a. A corresponding plot of Equation [10] is shown in Figure 6b.

If the pressures produce large deflections exceeding 1/3 of the thickness, the gage response will be non-linear, as an appreciable part of the pressure will be balanced by membrane stresses (6). The pressure producing a deflection of $t/3$ is

$$P = \frac{16}{9(1 - \mu^2)}\, E\left(\frac{t}{a}\right)^4 = 2E\left(\frac{t}{a}\right)^4 \qquad [12]$$

Combining Equations [10] and [12]

$$P = \frac{1}{18ES^2} \qquad [13]$$

This relation is plotted in Figure 6c.

The maximum stress in the diaphragm occurs at the edge and is

$$\sigma_{max} = \frac{3}{4}\frac{pa^2}{t^2} \qquad [14]$$

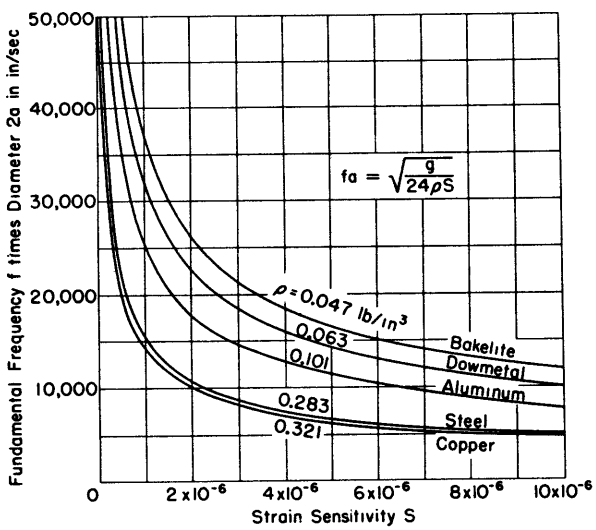

Figure 6a

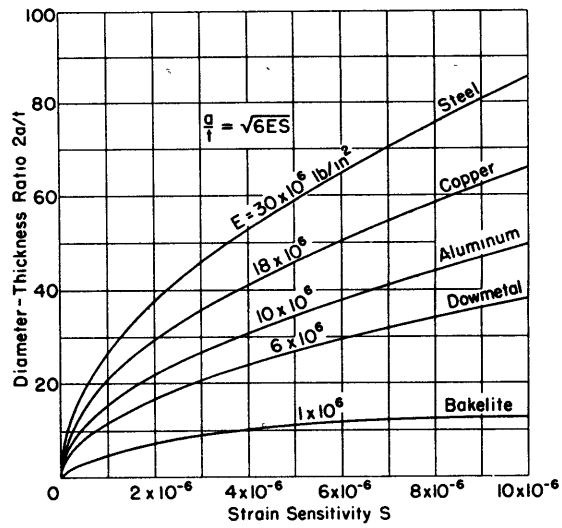

Figure 6b

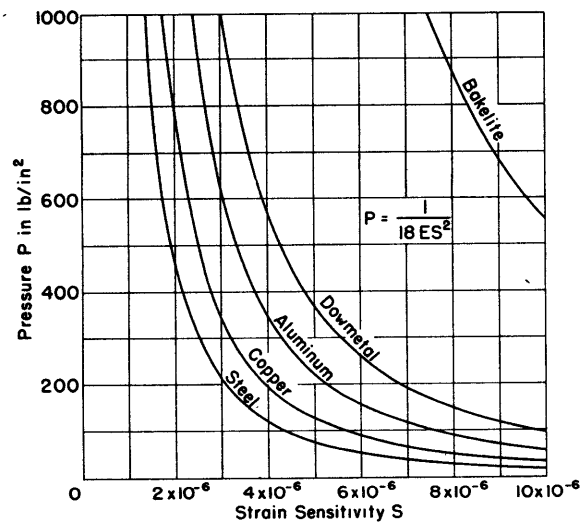

Figure 6c

Figure 6 - Gage Design Characteristics

Figure 6a shows the relation between the strain sensitivity and the product of the fundamental frequency and the diameter of the diaphragm.

Figure 6b shows the relation between the strain sensitivity and the ratio of the diameter to the thickness of diaphragm.

Figure 6c shows the relation between the strain sensitivity and the uniform load that would cause a deflection of the diaphragm equal to 1/3 its thickness.

S is the strain sensitivity, the fractional change in length of the sensitive wire per unit pressure applied to the gage. Gage sensitivity is $S \times G$.

For the various materials covered in Figure 6 the yield strength is sufficiently high to prevent permanent deformation for moderately high pressures.

The three plots of Figure 6 contain the basic design characteristics of the diaphragm gage. It is evident from these plots that many parameters can be varied in the design of a gage of this type.

CONSTRUCTION OF THE GAGE

A cross-sectional diagram of the present design of TMB diaphragm blast gage is shown in Figure 7.

To prevent back pressure developing on the inner surface of the diaphragm, all possible sources of leakage in the gage are filled with plastic

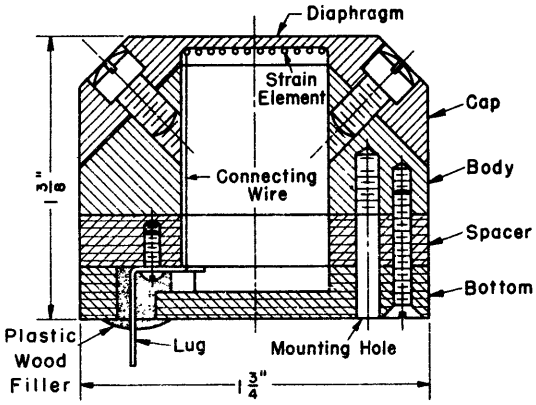

Figure 7 - Section through Blast Gage

The diaphragm acts as a flat, fixed-edge, circular plate with a characteristic deflection pattern and a natural frequency dependent on its composition, thickness, and diameter and with an inherent degree of mechanical damping. The strain-sensitive element cemented to the diaphragm consists of a single layer, spirally-wound, non-inductive wire coil. The winding has generally been of insulated Advance resistance wire, 1 mil in diameter, with a resistance of 300 ohms per foot. Two cementing materials found to be satisfactory were Glyptal and Duco cement.

wood, covered with Duco cement and sprayed with clear lacquer. The ends of the strain gage wire are connected to the lugs by silk-covered copper wire about 8 mils in diameter. These connecting wires are cemented to the body of the gage to prevent any extraneous signals that might develop from their vibration.

The protective measures taken thus far against leakage have not been completely successful. Laboratory tests have indicated that the degree of leakage is sufficient to cause the recorded durations of blast pressure waves to be less by 10 to 20 per cent than the true values. Experiments seeking to eliminate this weakness in the gage design are now in progress.

RECORDING APPARATUS

The auxiliary equipment necessary for recording blast pressures with the diaphragm gage consists of a ballast circuit, a pre-amplifier, a cathode-ray oscillograph, a sweep generator (8), a trip circuit, an oscillator, a microvolter, and a camera, as shown in Figure 8.

The voltage signal generated by the blast gage is transmitted from the ballast circuit to the pre-amplifier, then to the electronic filter, and finally to the cathode-ray oscillograph. The horizontal plates of the oscillograph are controlled by a sweep generator which determines the time

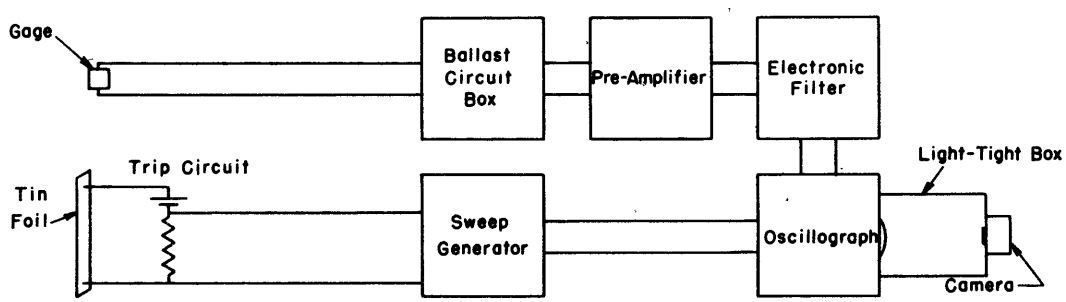

Figure 8 - Schematic Diagram of Recording Equipment

resolution of the record. The theory of the design and operation of the ballast circuit is discussed in detail in Appendix 1.

Figure 9 is a schematic diagram of the pre-amplifier designed and built at the Taylor Model Basin for use with the diaphragm gage. This amplifier has a gain factor of about 500 with a very low noise level. As protection against microphonics due to air-borne noise and vibration of the supports the amplifier is shock-mounted in a special wooden case lined with sound-absorbing material. Figure 10 is a schematic diagram of the TMB electronic filter used with the gage. The unit is easily tuned to a gage at the time of a test.

The sweep of the electron beam of the oscillograph is regulated by a sweep generator (8). The initiation of the sweep is accomplished by the rupture of a strip of tin foil by the blast wave itself. The tin foil is placed a short distance forward of the gage position, directed toward the blast source. The tin foil is an integral part of a simple electrical circuit which transmits a voltage pulse to the sweep generator.

By the use of an oscillator and microvolter, calibration photographs are taken with a known voltage variation passing through the same electrical path as the blast pressure signal; the time rate of sweep and the screen amplitude sensitivity can thus be determined.

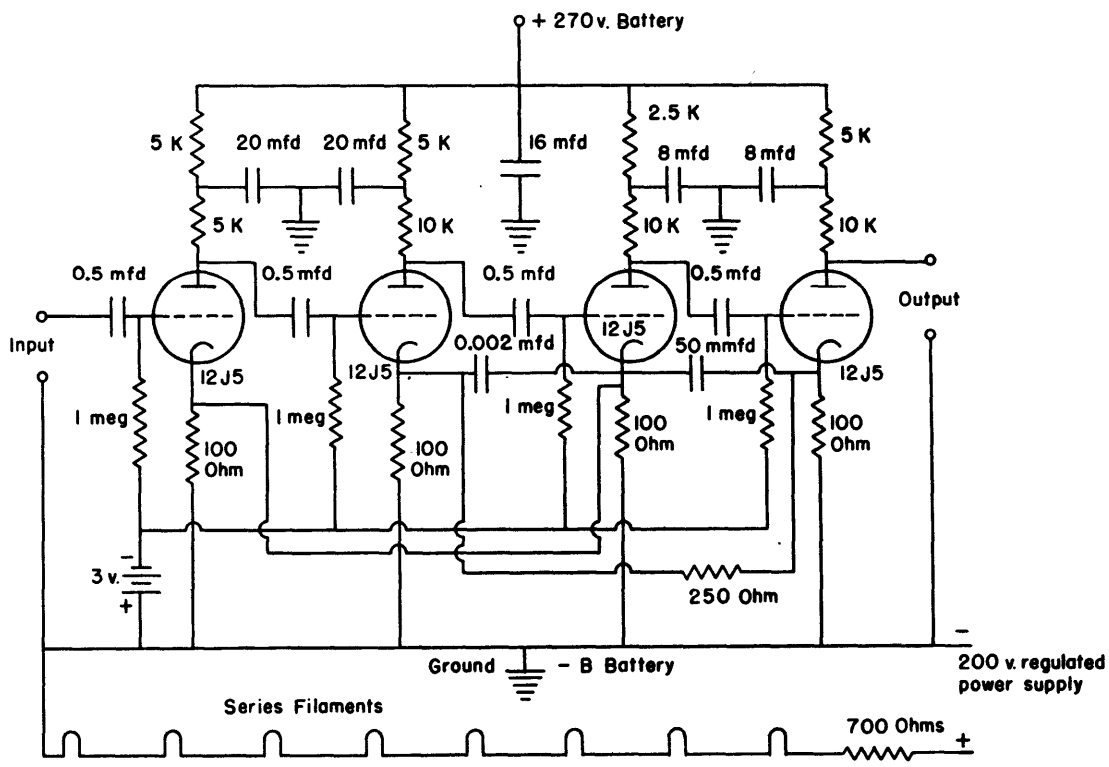

Figure 9 - Circuit of TMB Pre-Amplifier

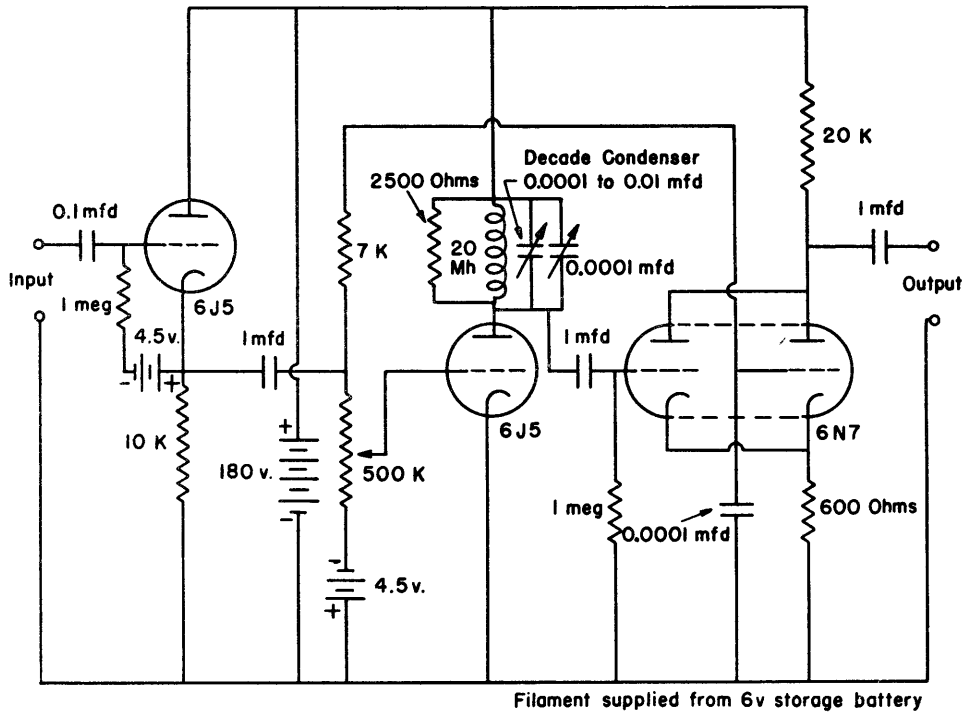

Figure 10 - Circuit of TMB Electronic Filter

CALIBRATION OF GAGE AND RECORDING APPARATUS

Theoretical considerations (3) (7) (9) indicate that the response of a linear system to a positive rectangular pressure wave will be identical in form but opposite in direction to its response to a negative wave. The calibration method used gives the effect of a negative pressure wave.

The blast gage is enclosed in an air chamber and the pressure is raised to a selected value by a hand pump; see Figures 11 and 12. When the blast gage reaches a condition of stable equilibrium, as indicated by the beam on the oscillograph screen, the pressure in the chamber is released suddenly by the rupture of a cellophane window in the wall of the chamber. The gage diaphragm returns rapidly to its original unloaded position, causing a dynamic variation of resistance of the strain gage. A photographic record of the corresponding voltage change is taken. A sample pressure calibration record is shown in Figure 13, together with a voltage calibration record in Figure 14; this latter calibration is necessary to determine the amplitude of the signal in volts.

From the initial air pressure in the chamber and the pressure calibration signal the sensitivity of the gage is then calculated in terms of d.c. volts per unit pressure. The air-pressure chamber has a volume of about 3/8 cubic inch. An effort was made to keep this volume as small as possible to cause a sharp pressure drop. The calibration records indicate that this

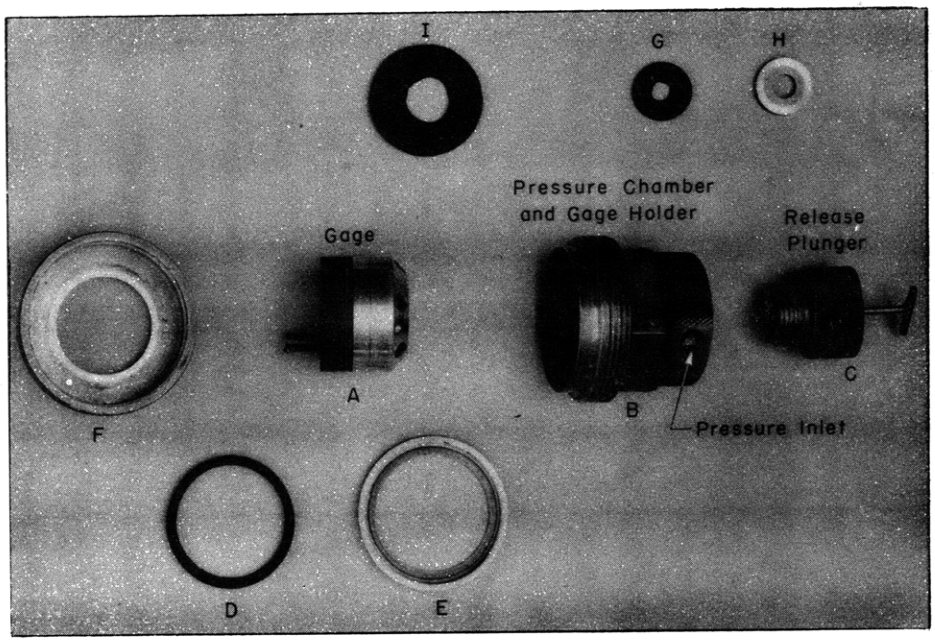

Figure 11 - Unassembled Calibrating Unit

The gage A rests against the rubber washer I in the pressure chamber B. The rubber washer D is then compressed to the body of the gage by the threaded ring E to form an air-tight fit. The collar F is used to clamp the gage to the chamber body B. A cellophane disk inserted between washers G and H is clamped into the pressure chamber by the screw fitting C which holds the release plunger.

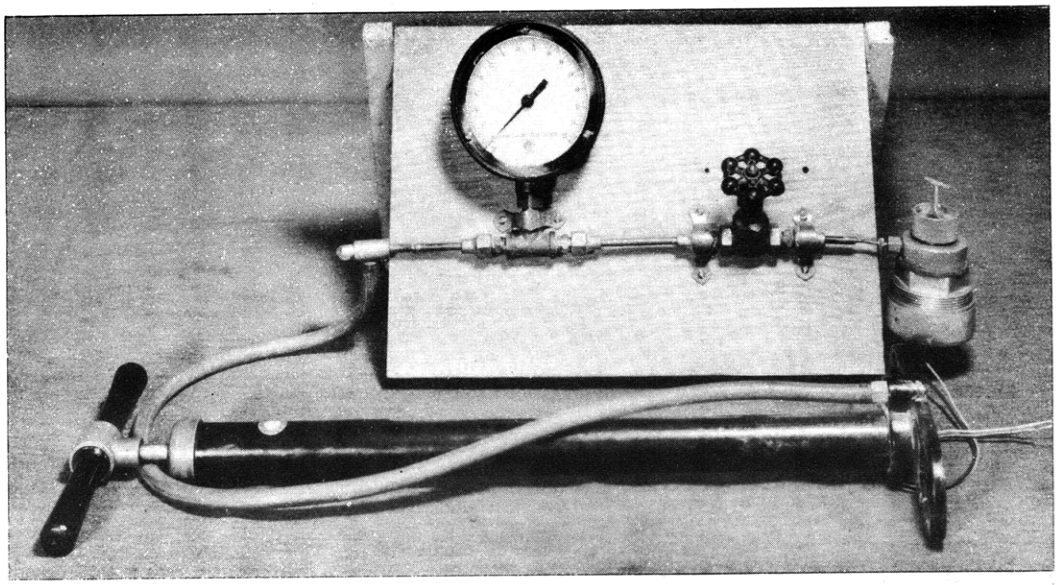

Figure 12 - Assembled Pressure Calibration Apparatus

The unit described in Figure 11 is shown at the right, connected to the rest of the calibrating apparatus. The hand pump is used to raise the pressure within the air chamber to a predetermined value. The pressures within the air chamber are indicated on the Bourdon pressure gage. The globe valve is inserted in the line as a protection against damage to the needle of the Bourdon gage due to the sudden release of pressure in the air chamber.

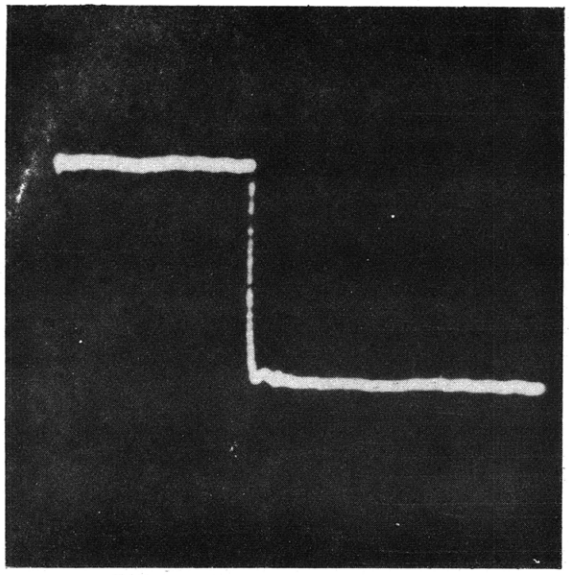

Figure 13 - Sample Pressure Calibration Record

The step down follows abrupt release of a known pressure on the gage. The natural vibrations of the gage are of negligible amplitude because of a relatively long pressure-release time of about 3 milliseconds.

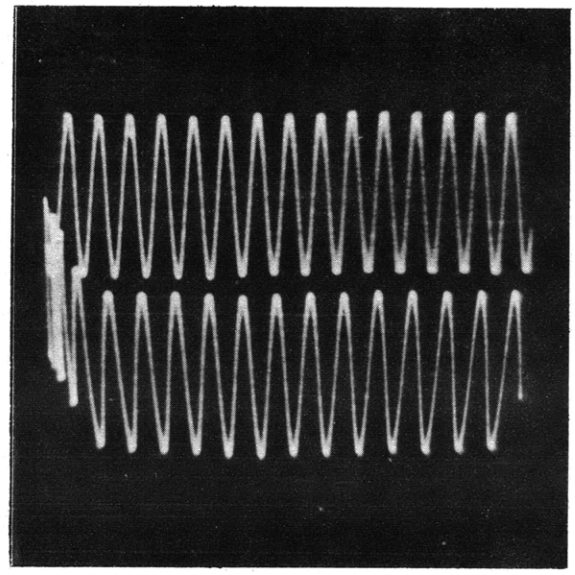

Figure 14 - Voltage and Time Calibration Record

The record shows the response of the oscillograph to a sine-wave signal of known voltage and frequency. The initial left to right sweep in the upper part of the record is the one used; the right to left return sweep in the lower part of the record should be disregarded.

drop occurs in 3 milliseconds. The cellophane window generally used has been 0.001 inch thick and 1/2 inch in diameter, with a rupture strength greater than 50 pounds per square inch.

Static calibration is accomplished by measurement of the variations in resistance with pressure by a Carey-Foster or Wheatstone bridge circuit. However, with this method an effect of "temperature drift" is introduced which becomes serious enough to lower the degree of accuracy. A general characteristic of all conducting wires is that the resistivity varies with temperature, so that

$$R = R_0 (1 + \beta t) \qquad [15]$$

The Advance wire generally used for strain gages has a very low temperature coefficient, $\beta = 2 \times 10^{-6}$ per degree. For a slow temperature change of one degree centigrade the resistance change of a 500-ohm gage will be 0.001 ohm. The resistance change of the same gage for a pressure change of 1 pound per square inch will depend on the sensitivity, and may be as low as 0.0015 ohm. Therefore it is evident that a serious extraneous factor may be introduced. However, in the case of the dynamic calibration, any possible change in temperature over the short interval of time is negligible, and therefore the problem is eliminated.

A special method for calibration of the recording equipment during field tests has been developed. An auxiliary circuit in parallel with the gage resistance is designed to produce resistance changes similar to those caused by blast pressures applied to the gage. The calibration signal generated in this manner is a rectangular step-pulse which offers the advantage of a determination of the frequency response of the entire recording circuit. Calibration records of this kind, as shown in Figure 13, also indicate whether or not the blast pressure signals are electrically distorted by transmission through the recording equipment. The theory of this method is discussed in Appendix 2. A sample record containing this calibration step is shown in Figure 22a.

Calibration records are taken simultaneously with the blast pressure record to insure reliable calibration data. Experience during a number of field tests indicated that the gain of the amplifiers may vary possibly 20 per cent because of unstable line voltages. The line voltage fluctuations often went beyond the range of control of the voltage regulators.

GAGE CHARACTERISTICS

The dynamic calibration data taken with a dowmetal gage with a 1/2-inch diameter diaphragm, having a natural frequency of vibration of 26,000 cycles per second, are shown in Figure 15. With a negligible scattering of the data, the gage signal is shown to be directly proportional to the applied pressure over the region covered.

SENSITIVITY

The spirally-wound strain gages used on the 1/2-inch diaphragms were generally 3/8 inch in diameter. The sensitivity* of the dowmetal gage $\Delta R/R\Delta p$ was calculated theoretically to be 13.1×10^{-6} per pound per square inch, whereas experimentally it was found to be 12.7×10^{-6} per pound per square inch. Applying the latter figure, the strain sensitivity S was calculated to be about 6×10^{-6} per pound per square inch. The plot of Figure 6c, page 7, indicates that the linearity of the gage extends beyond a pressure of 250 pounds per square inch.

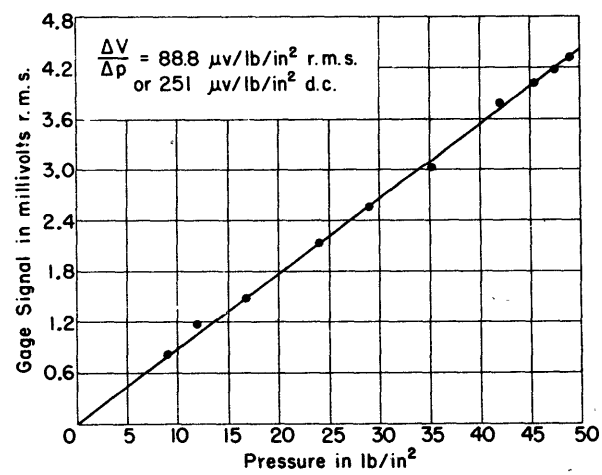

Figure 15 - Calibration Curve of Diaphragm Blast Gage

* See Equation [8].

Repeated calibration of several gages with 3/4-inch diameter aluminum diaphragms showed no evidence of a variation in sensitivity over a period of several months. The effects of humidity variations and aging appeared to be negligible. Critical tests under very damp conditions were not made. If the gage is to be used under such conditions for an appreciable length of time it is best to use a waterproof cement or possibly to apply a waterproof coating to the strain gage.

A question arises as to the effect of repeated violent shocks on the bond between the strain gage and the diaphragm. Calibration of gages before and after each blast test showed no changes in sensitivity, which may be taken to indicate that the bond was not weakened. However, some gages were definitely damaged during the tests, as shown by extraneous high-frequency signals on the blast records. The damage in these cases may be attributed to faulty construction. New strain gages were cemented to the diaphragms and after the units were recalibrated they were found to be completely restored.

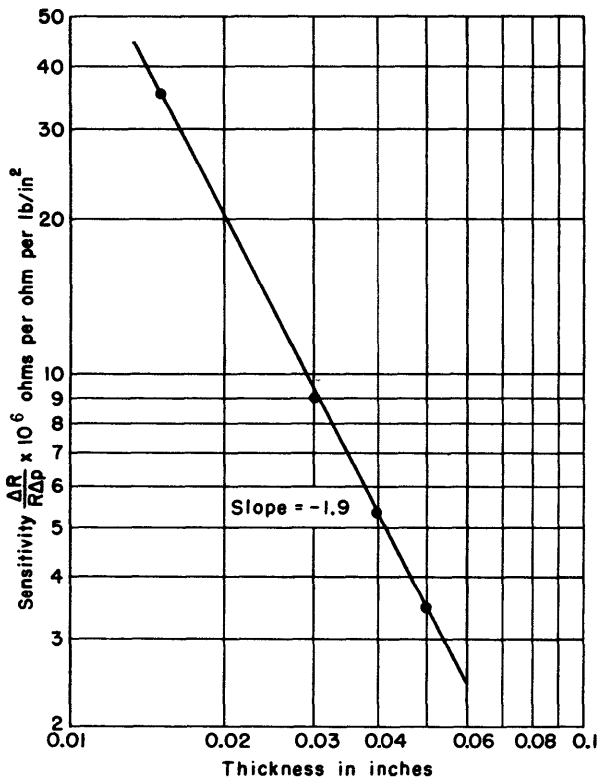

Figure 16 - Variation of Pressure Sensitivity with Diaphragm Thickness for a 3/4-Inch Diameter Aluminum Diaphragm

The gage sensitivity should theoretically vary inversely as the square of the thickness of the diaphragm. This relation was checked experimentally with the result as shown in Figure 16.

NATURAL FREQUENCY AND DAMPING

Natural vibrations of the diaphragm are excited when the gage is subjected to a blast wave, because of the abrupt pressure rise. The amplitude of these vibrations is governed by the relation between the time of initial rise to peak pressure and the natural period of the gage (2) (3). Actual pressure records contain a superposition of the free and forced motion of the diaphragm. The nature of the blast disturbance is determined by averaging the displacements of the diaphragm over each cycle. A sample blast record is shown in Figure 17.

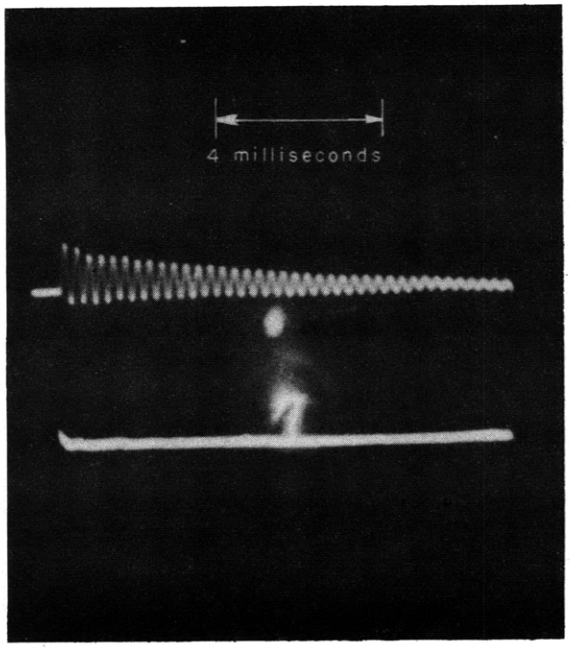

Figure 17 - Record of Blast from 16-Inch, 45-Caliber Gun Taken with a Steel Gage having a 2-Inch Diameter Diaphragm

The frequency of the gage used to obtain this record was 4000 cycles per second. The record runs from left to right along the upper trace and then back from right to left along the lower trace.

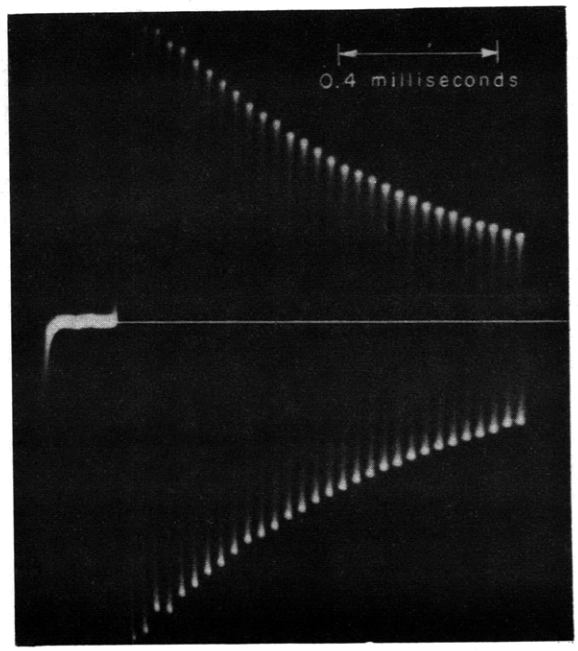

Figure 18 - Record of Free Vibrations of a 3/4-Inch Diameter Duralumin Diaphragm Excited by a Ball Dropping upon it

The natural frequency is 28,800 cycles per second, and the damping is 0.62 per cent of critical. The number of cycles required for reduction of amplitude by 90 per cent is 57. The duration of 57 cycles is about 2 milliseconds.

For the case of an undamped diaphragm the amplitude of the free oscillations initially excited would be maintained throughout the record. However, since all mechanical systems have some degree of damping, the free vibrations gradually diminish in amplitude and the forced motion continues unaffected. The number of cycles n taken for the amplitude of natural oscillations to decrease to 10 per cent of its initial value is given by $36/\lambda$, where λ is the per cent critical damping. For a gage having a damping factor of 1 per cent critical, $n = 36$. The corresponding time taken for n cycles is n/f, where f is the natural frequency. It is evident that for a particular blast test the factor n/f should be small compared with the positive duration of the pressure wave; however this is not always possible.

The natural frequency and damping characteristics of the gage are determined experimentally by dropping a 1/8-inch steel ball on the center of the diaphragm from a height of approximately 12 inches. A sample record of the excitation of the diaphragm is shown in Figure 18. For this gage n/f is about 2 milliseconds.

The record indicates a natural frequency of 28,800 cycles per second whereas the frequency calculated for this gage from Equation [9] is about 35,000 cycles per second. The presence of the strain element on the back of the diaphragm is not considered in the equation. This element introduces both a mass and a stiffness effect. At about 10,000 cycles per second these effects cancel each other as shown by the fact that the actual gage frequencies and calculated frequencies are equal. The natural frequency of the strain gage is, therefore, about 10,000 cycles per second since when fixed to the diaphragm it does not alter its frequency. Since the weight of the strain gage is about 0.001 pound, the corresponding stiffness becomes 10,000 pounds per inch. A closer approximation of the expected blast gage frequency can be determined by

$$f = \frac{1}{2\pi}\sqrt{\frac{k + k'}{m + m'}} \qquad [16]$$

where k is the stiffness of the diaphragm,
m is the mass of the diaphragm,
k' is the stiffness of the strain gage, and
m' is the mass of the strain gage.

The strain gage constants m' and k' are given in the foregoing while the values of m and k for the diaphragm are given by

$$k = \frac{\pi^3 E t^3}{a^2}$$

$$m = \frac{\pi a^2 \rho t}{g}$$

The stiffness k of the diaphragm is defined as the stiffness of the spring of an equivalent simple system of one degree of freedom whose mass is equal to the mass of the diaphragm and whose fundamental frequency is equal to the fundamental frequency of the diaphragm.

The modified frequency formula yields values that check the experimental frequencies to within about 4 per cent for the range from 10,000 to 30,000 cycles per second.

The damping factor indicated in Figure 18 is about 1/2 of 1 per cent critical damping. The average damping of a number of gages was found to be about 3/4 of 1 per cent critical, in which free oscillations would decrease 90 per cent in amplitude in about 50 cycles. For a 30,000 cycles per second gage the corresponding time would be 1.7 millisecond. This damping factor has been found to be inherent in the gage. Artificial damping would offer advantages, but has been found impractical because of mechanical difficulties.

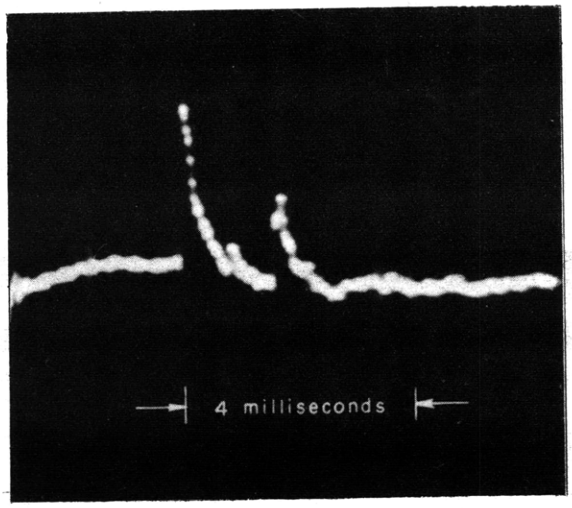

Figure 19a - Record of the Blast from a Bare Charge, taken with an Electronic Filter

The second pulse is the ground reflection wave.

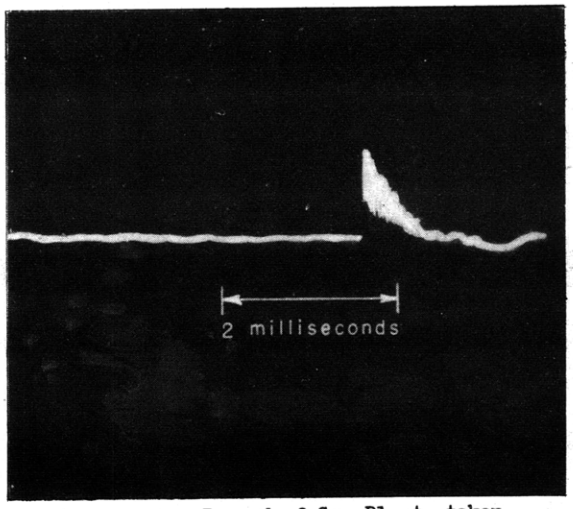

Figure 19b - Record of Gun Blast, taken without an Electronic Filter

Figure 19 - Blast Records with and without Electronic Filter

The pressure durations of these sample records are intended only as an indication of an order of magnitude.

The possibility of eliminating the natural oscillations from the pressure records by an electronic filter was investigated, with good results. Comparative records taken with and without a filter for blast pulses of short duration are shown in Figure 19. The filter offers a means of using gages with higher sensitivities but with lower natural frequencies, whenever relatively low signals are to be measured. However, the duration in such cases should be at least 10 times the natural period of the gage so that the distortion in the blast record may be negligible.

It is evident that the time-resolving power of the diaphragm gage is greater as its natural frequency is higher. However, frequencies of the order of 30,000 to 50,000 cycles per second have given good resolution of various blast waves in air ranging in duration from $\tau = 0.75$ millisecond for 3-inch guns to $\tau = 35$ milliseconds for large bombs.

ACCELERATION EFFECTS AND THEIR REMEDIES

All diaphragm gages respond to accelerations in the same manner as to applied pressures, and this results in extraneous signals on blast pressure records which can be reduced but not wholly eliminated. Because of the unavoidable inertia of the diaphragm its motion can be excited by an accelerated motion of the body of the gage even in the absence of external pressure. A large structure set into vibratory motion by an applied blast wave, and carrying the gage with it, can develop a driving force of this kind.

Therefore definite precautions must be taken to minimize these acceleration effects or to eliminate them from blast pressure records.

Three remedies can be applied to the diaphragm gage, namely

1. using a diaphragm having a very low mass,

2. mounting the diaphragm on a seismic unit, not subject to acceleration, and

3. using a twin-gage unit to cancel accelerations.

The first method presents a simple solution. The force F due to the acceleration α*, is given by

$$F = m\alpha = p \cdot \pi a^2 \qquad [17]$$

where

$$m = \frac{\pi a^2 t \rho}{g} \text{ for the diaphragm gage,}$$

so that

$$\frac{\alpha}{g} = \frac{p}{t\rho} \qquad [18]$$

For an aluminum gage having a diaphragm 0.05 inch thick an acceleration of 200 g would be necessary to develop a signal equivalent to 1 pound per square inch pressure. Large structures such as bulkheads, decks, and superstructure framework on ships develop peak accelerations of about 100 g to 200 g as a result of a gun blast pressure impulse. A rigid coupling between the gage and a structure of this kind would be the simplest mounting possible, but some reduction of acceleration effects could be obtained by the use of soft isolating mountings. A double diaphragm gage with one diaphragm shielded from the pressure but exposed to the acceleration, was tried and found to produce satisfactory cancellation. The best results have been obtained, however, by reduction of mass in the diaphragm.

TYPES OF MOUNTS

The discussion of the preceding section indicated that a gage may be mounted as an integral part of a structure without requiring any special technique in eliminating acceleration effects. When these effects, however, are of a serious order of magnitude a twin-gage unit may be used which is also fixed rigidly to the structure. This unit consists of two identical diaphragm gages mounted symmetrically in a circular steel casing. One gage is subjected to both pressure and acceleration; the other to acceleration only. By opposing the signals of the two gages the acceleration effect may be eliminated to a large extent.

---

* Not to be confused with a, the diaphragm radius.

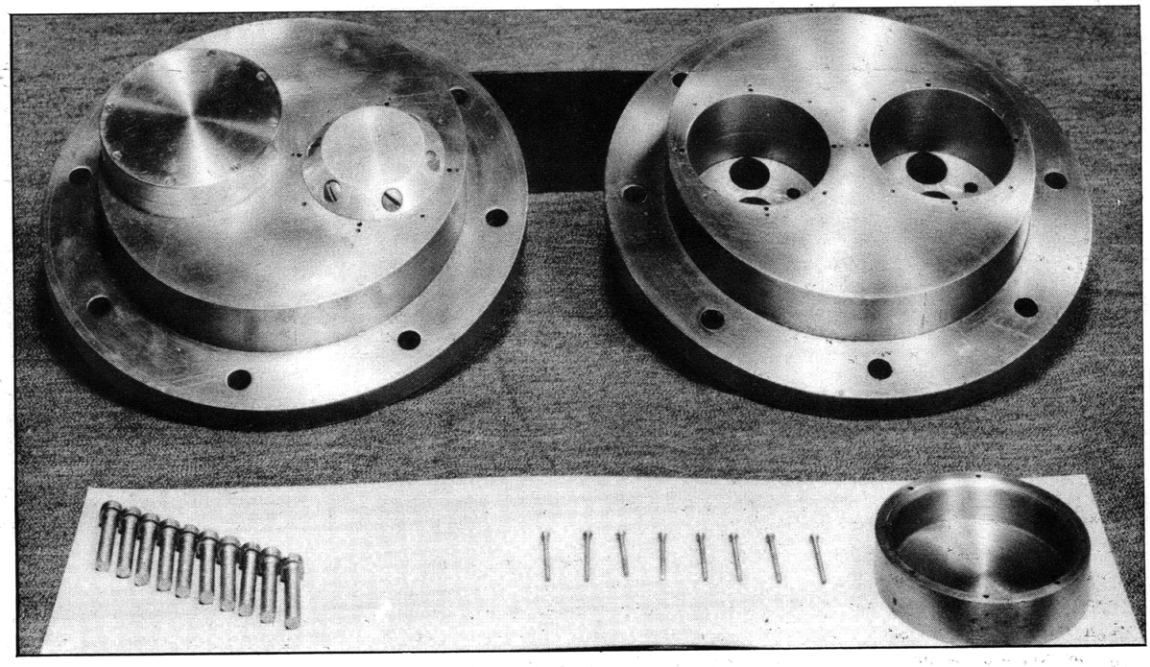

Figure 20 - Twin-Gage Mount

This consists of two identical gages mounted on one plate with opposed strain gage connections. One gage diaphragm is exposed to the pressure and the other is shielded from it by the cap shown.

The bucking effect is accomplished electrically by a bridge circuit or by using one gage as the ballast resistance in the ballast circuit; see Appendices 1 and 2. The pressure sensitivities of the two gages can be made equal to within a few per cent. The largest percentage of the acceleration effect that can be eliminated is equal to the ratio of these sensitivities, where the maximum ratio is unity. A photograph of a twin-gage mount is shown in Figure 20.

A problem encountered with this type of mount is that the two diaphragms can not always be constructed exactly alike with regard to natural frequency and therefore do not respond identically to accelerations. Thus a beat effect may develop between the free oscillations of the two gages.

The photograph in Figure 21 shows a seismic mount designed for the diaphragm gage. The requirement of a mount of this type is essentially a high inertia combined with a low frequency, so that the motion of the gage will be negligible for the duration of a blast pulse.

FIELD TESTS

Blast pressure measurements have been made with bare charges, large bombs, and guns of various calibers. A number of sample records are shown in Figure 22. The legend beneath each record indicates the test conditions.

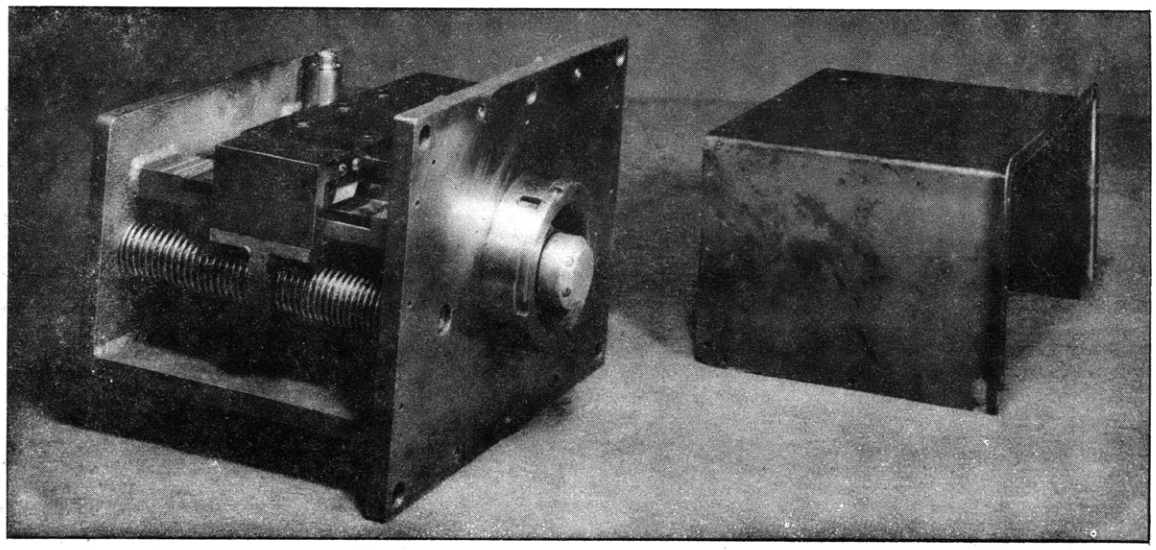

Figure 21 - Seismic Mount

The mount consists of a 5-inch cube of steel coupled horizontally to the casing by four compression springs with a frequency of 2 cycles per second. The mass rests on a series of ball bearings and is constrained to move along two parallel horizontal tracks. The gage is fixed rigidly to the mass, with its diaphragm projecting from the front of the mount, while the casing of the mount is bolted to the structure under test. A level is attached rigidly to the frame of the mount to permit correct positioning of the mass.

DISCUSSION OF SOME TEST RESULTS

During one of the tests simultaneous records were taken at the surface of a large baffle and in free space, to determine the effect of a structure on a blast wave. The baffle consisted of a heavy steel plate 6 feet square, as shown in Figure 23, with the seismic mount containing the gage bolted to the center. The seismic mount was used in this case because large accelerations were expected. The mounting of the free-space gage is shown in Figure 24. The framework of this mount was improvised from equipment used during an earlier test.

The two setups shown in Figures 23 and 24 were situated 1 foot apart laterally at equal distances from the muzzle of a 16-inch 45-caliber gun under test. The peak pressures indicated by the gage in the large plate were higher on an average by about 25 per cent while the durations of the positive pressure phase were higher by a factor of about 3 or 4. The increase in duration corresponded to the time taken for a rarefaction wave to travel with the velocity of sound from the edge of the baffle to its center. The presence of the baffle definitely altered the blast pressure wave qualitatively. The quantitative measurements cannot be depended upon, however, because of possible leakage effects that were discovered after this test. An effort will be made to conduct a similar test in the future for a quantitative analysis. It is clear, however, that blast pressure measurements should

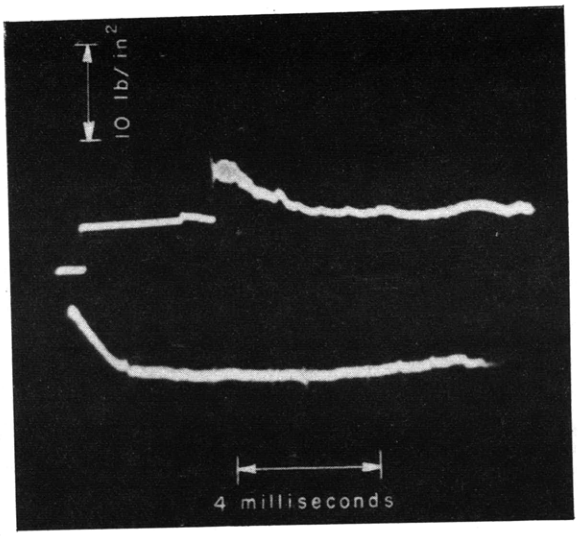

Figure 22a - Gun Blast Record during the Firing of 5-Inch, 38-Caliber Twin Mount

This record was taken with a 26,000-CPS dowmetal gage. The gage was mounted in a 28-inch circular baffle at 23 feet from the muzzle of the nearer gun, and about 3 1/2 feet from the line of fire. The step pulse at the beginning of the record is a calibration signal; see Appendix 2. From the indication of other records the delay time between the firing of the two guns was greater than the duration of the sweep and therefore only the first pulse was recorded.

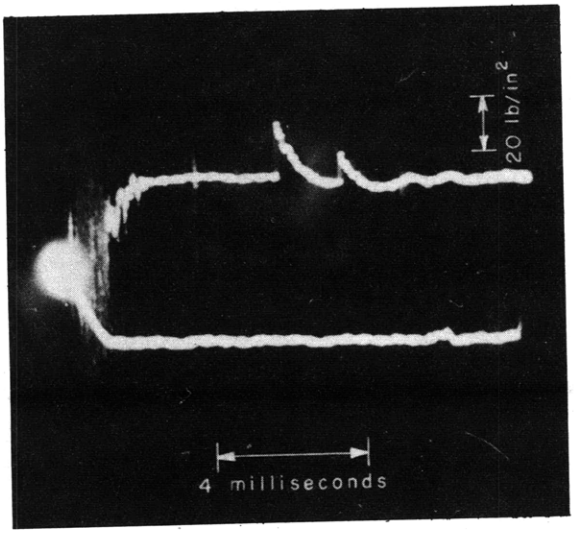

Figure 22b - Bare Charge Blast Record

This record was taken with a 30,000-CPS aluminum gage freely suspended 5 feet above the ground at 14 feet from an 8-pound charge of nitrostarch. The second pulse is the reflection of the initial wave from the ground.

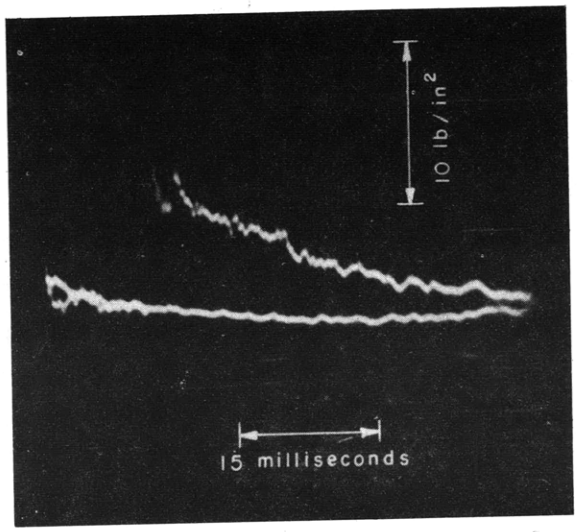

Figure 22c - Bomb Blast Record during the Firing of a 10,000-Pound Bomb

This record was taken with a 19,000-CPS aluminum gage. The gage was located 4 feet above the ground at 200 feet from the bomb. The zero line preceding the initial rise in pressure is superimposed on the return trace.

Figure 22 - Field Test Blast Pressure Records

The pressure durations of these sample records are intended only as an indication of an order of magnitude.

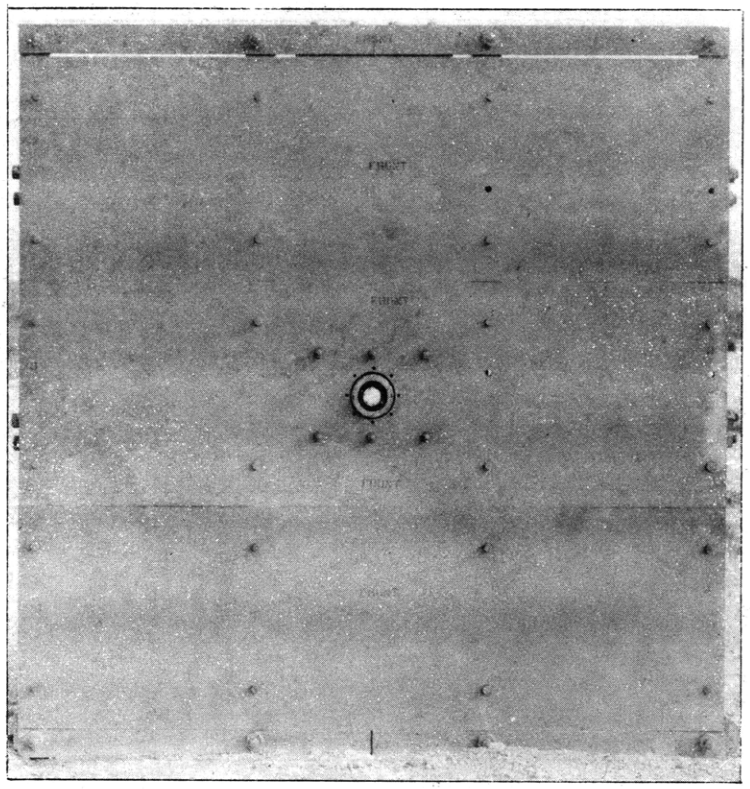

Figure 23 - Face Plate used for Baffle Test

The gage is fixed to the seismic mount shown in Figure 21. The mount is bolted in a horizontal position to the center of the baffle.

be made directly on the structures being investigated for reliable structural analyses.

During another test the effect of orientation of the gage was investigated. Simultaneous records were taken with two unbaffled gages oriented at 90 degrees to each other. The diaphragm of one gage was parallel to the wave front while that of the other gage was normal to it. The peak pressure of the face-on gage was about 70 per cent higher, but no increase in duration of positive phase could be measured. Theoretically an increase in duration of about 0.05 millisecond was expected. The time resolution of the records, however, was not sufficient to allow such precise measurements.

The record of an edge-wise gage may be assumed to indicate the true fluid pressure existing in the blast wave. However, a correction factor must be introduced, taking account of the transit time of the wave across the face of the gage. This transit time would also be a source of error in the determination of the durations of positive phase. Fortunately, these corrections are generally of a negligible order of magnitude.

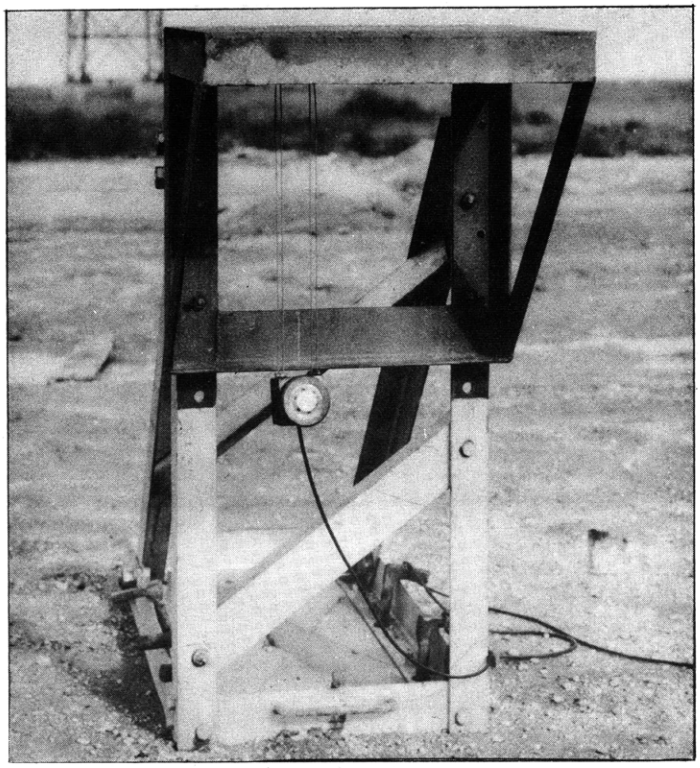

Figure 24 - Free-Space Gage Mounting

The gage assembly hangs on a bifilar suspension about 2 feet in front of the steel framework.

In the case of a face-on gage the indicated pressures are governed by the Bernoulli effect and a reflection effect. At the instant of application of the blast wave the reflection effect causes a doubling of the blast pressure, which lasts for a time equal to that taken by a rarefraction wave to travel from the edge to the center of the gage.

No tests were conducted with gages directed away from the blast source. It is evident that orientation effects must be considered in the analysis of pressure records. These effects will be less significant for gages of smaller dimensions. In the case of measurements on large structures, however, these effects are of extreme importance and must be given full consideration.

CABLE EFFECTS

Standard microphone cable of the 2-conductor shielded rubber-covered type has been used on all tests with negligible degrees of cable signal.* Theoretically the signal from a low-impedance generator is not

* By cable signal is meant any extraneous voltage variations introduced by mechanical distortion of the cable by the pressure wave.

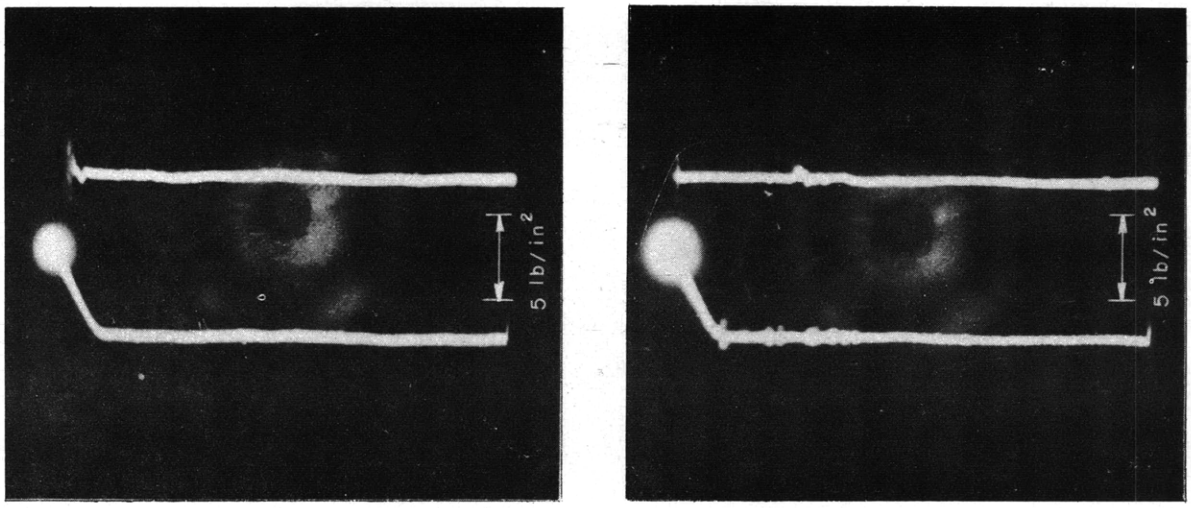

Figure 25 - Test Records of Cable Signals

influenced by cable effects. This is one of the chief advantages of the metalectric-type pressure gage where the impedance of the generator is of the order of only a few hundred ohms. In Figure 25 are shown two sample records of cable signal taken with the aid of a dummy gage. The dummy gage consisted of a 500-ohm, 10-watt resistor completely shielded from the blast wave by a casing. The error that would have been introduced on a pressure record by the largest cable signal would have amounted to only a few per cent of the corresponding pressure.

PRECAUTIONS NECESSARY IN FIELD TESTS

Several precautions have been found by experience to be necessary in the measurement of blast pressure by diaphragm gages.

1. The body of the gage should be grounded to the shield or to the structure in which it is mounted, as a protection against electrostatic effects.

2. The shield or structure should not carry any of the current passing through the gage. This can be prevented by the use of a 2-conductor shielded cable, since the wire coil is insulated from the body of the gage by the construction.

3. The cable leads should be soldered to the terminals of the gage and fastened firmly so that whipping of the cable will not cause the terminals to vibrate.

4. Irregular line voltage variations should be controlled by the use of a variac and voltage regulator.

5. Recording equipment should be isolated from shock to minimize the transmission of vibrations of the supports.

6. Whenever possible, it is advisable to use a single length of cable without joints from the gage on the field to the ballast box located with the auxiliary recording equipment.

CONCLUSIONS

A diaphragm gage suitable for measuring fast transient pressures is now available; the technique of its field use is subject to further development, but it has been demonstrated that good records are obtainable.

Comparison of results with those of crystal gages is not yet available, but when agreement with such gages is obtained the quantitative measurement of blast pressure on time will be an accomplished fact.

REFERENCES

(1) "USS SARATOGA - Effect of Gun Blast on Flight Deck and After Elevator," by E.E. Johnson and Comdr. W.P. Roop, USN, TMB CONFIDENTIAL Report 484, July 1942.

(2) "Untersuchungen zur Bestimmung des Druckes in dem beim Sprengen und Schieszen entstehenden Luftstoszwellen" (The Determination of Pressure in Atmospheric Shock Waves due to Blasting and the Firing of Guns), by Wilhelm Schneider, Zeitschrift für das gesamte Schiesz- und Sprengstoffwesen, August 1939 to December 1939 inclusive. TMB Translation 102, April 1943.

(3) "Effects of Impact on Simple Elastic Structures," by J.M. Frankland, Ph.D., TMB Report 481, April 1942.

(4) "Characteristics and Aircraft Applications of Wire Resistance Strain Gages," by A.V. deForest, Instruments, vol. 15, April 1942, p. 112.

(5) "Formulas for Stress and Strain," by Raymond J. Roark, McGraw-Hill Book Company, New York, 1938.

(6) "Die Elastischen Platten," by A. Nadai, J. Springer, Berlin, 1925, p. 296.

(7) "Vibration Problems in Engineering," by S. Timoshenko, D. VanNostrand Company, New York, 1928.

(8) "The TMB Linear Sweep Oscillator," TMB Report 483, December 1941.

(9) "Mechanical Vibrations," by J.P. DenHartog, McGraw-Hill Book Company, New York, 1934.

APPENDIX 1

THEORY OF THE BALLAST CIRCUIT

The purpose of this circuit is to transform resistance variations of the strain gage into voltage variations. The circuit is shown schematically in Figure 26. The voltage V across the terminals leading to the amplifier is given by

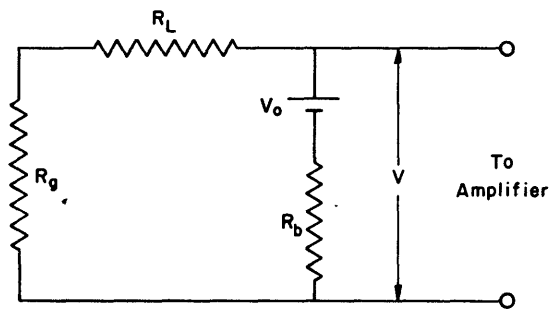

Figure 26 - Strain Gage Ballast Circuit

$$V = \frac{R_g + R_L}{R_b + R_g + R_L} V_0 \qquad [19]$$

where R_g is the gage resistance,
R_L is the cable resistance,
R_b is the ballast resistance,
V_0 is the battery voltage under load.

By differentiation with respect to R_g the electrical sensitivity is found to be

$$\frac{\Delta V}{\Delta R_g} = \frac{R_b}{(R_g + R_b + R_L)^2} V_0 \qquad [20]$$

or since

$$V_0 = I(R_g + R_b + R_L)$$

$$\frac{\Delta V}{\Delta p} = \frac{R_b R_g}{R_g + R_b + R_L} I \frac{\Delta R_g}{R_g \Delta p} \qquad [21]$$

where $\Delta R_g/R_g\Delta p$ is the gage sensitivity as determined by calibration.

The electrical sensitivity is therefore governed by the quantity of current passing through the gage. The maximum current permissible will depend on the heat dissipation characteristics of the strain gage. Generally about 45 milliamperes have been used with a 500-ohm gage, but tests have been conducted satisfactorily with currents up to 90 milliamperes. The variation of the pressure sensitivity $\Delta R_g/R_g\Delta p$ with temperature is negligible for Advance wire, over the range of temperatures encountered in practice.

The ballast resistance R_b is generally made equal to the gage resistance R_g in order to minimize signal distortions. These distortions are due to the transmission line characteristics of the cable leading from the gage to the ballast box. When R_g and R_b are equal to the characteristic impedance of the cable, approximately 100 ohms for ordinary microphone cable,

then to a first approximation all frequencies contained in a signal will be attenuated alike. However, it is not always practical to make the gage resistance 100 ohms because of sensitivity considerations. Laboratory tests conducted with a 500-ohm gage of 30,000 cycles per second frequency showed that the signal distortions were negligible for cable lengths up to 1000 feet.

A method of increasing the signal delivered by the ballast circuit is to have the ballast resistance greater than the gage resistance with the current kept constant. This method has been tried with excellent results.

APPENDIX 2

THE MODIFIED BALLAST CIRCUIT

A schematic diagram of the ballast circuit modified for the step calibration method* is shown in Figure 27.

The resistance R_0 is constant, with a value of 25,000 ohms. The value of R_x is varied according to the expected amplitude of blast pressure signal. A short circuit across resistance R_x is opened, and thereby a small resistance change is developed. The signal generated in this manner is given by

$$\frac{\Delta V}{V_0} = \frac{A R_x}{B + C R_x} \qquad [22]$$

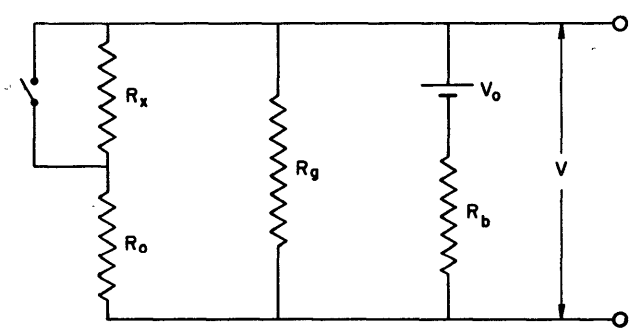

Figure 27 - Modified Ballast Circuit used for Square-Step Calibration Method

where

$A = R_b R_g^2$

$B = (R_b R_g + R_b R_0 + R_g R_0)^2$

$C = \left(R_b + R_g\right)\left(R_b R_g + R_b R_0 + R_g R_0\right)$

For the case of a 500-ohm gage with R_b = 1000 ohms, the signal would be given by

$$\frac{\Delta V}{V_0} = \frac{25 \cdot 10^7 R_x}{144 \cdot 10^{13} + 57 \cdot 10^9 R_x}$$

With values up to several hundred ohms for R_x, the term CR_x can be neglected.

---

* See top of page 13.

Therefore

$$\frac{\Delta V}{V_0} = 1.73 \cdot 10^{-7} R_x \qquad [23]$$

The presence of the auxiliary circuit introduces only a very slight effect on the signal generated by the gage during a blast test. The gage signal for a 500-ohm gage with R_b = 1000 ohms is given by Equation [20] as

$$\frac{\Delta V}{V_0} = 4.44 \cdot 10^{-4} \Delta R_g \qquad [24]$$

The maximum change in gage resistance R_g expected from a particular blast pressure is easily determined from the gage sensitivity factor $\Delta R_g/R_g\Delta p$. The relation between ΔR_g and R_x for equal amplitude of signal is

$$R_x = 2570\ \Delta R_g \qquad [25]$$

or in terms of excess pressure Δp and gage sensitivity S, where $S = \Delta R_g/R_g\Delta p$

$$R_x = 1.28 \cdot 10^6\ S\Delta p$$

During a field test the short circuit across R_x is in the form of a piece of tin foil, terminating a line from the ballast box to the test location. The tin foil is placed across a hole in a wooden block and exposed to the blast pressure wave. The position of the block is intermediate between the diaphragm blast gage and the tin foil, whose rupture initiates the sweep of the electronic beam. The rupture of this secondary tin foil of the auxiliary circuit opens the short circuit across R_x. The instantaneous resistance change developed is transmitted through the electric circuit a short interval ahead of the blast pressure signal. A sample record of the simultaneous calibration and blast pressure signal is shown in Figure 22a.