621.05
R15

RAILWAY MASTER MECHANIC

Chicago and New York

MASS. INSTITUTE TECHNOLOGY 6 APR 1912 LIBRARY

Index to Volume XXXV

JANUARY TO DECEMBER, 1911

ILLUSTRATED ARTICLES MARKED THUS*

EDITORIAL ARTICLES MARKED THUS†

A

Abrasion, Resisting Metal, An*.....240
Accessories, Car (Our Own Convention Exhibit)* 241
Accidents Statistics 533
Accidents, Prevention of.....373
Accidents, Railway 407
Adjustable Die Heads, Solid*.....116
Admiral Schley Visits Convention*....323
Advantages of Group and Individual Motor Drive.....550
Advantages of Variable Speed Motor Drive* 523
Advertiser, A Peak.....190
Air—
Brake Apparatus for Electric and Steam Service, Recent Progress in. 66
Brake, Story of the..... 28
Brush, New.....525
Hoist and Crane* 16
Pumps, Repairing* 180
Alcohol, Denatured, Use of in Railway Service 562
Allen Car Ventilator*.....400
All-Service Car Door, Williams*.....357
Alternating Current in Electric Railway Service† 429
American Radial Drill and Planer*....354
American Railway Master Mechanics Convention, Report of.....268
American Railway Master Mechanics Convention, Discussion at the*....385
American Society of Mechanical Engineers, Spring Meeting of.....166
Among the Manufacturers*32, 76, 116, 154, 192, 240, 350, 392, 437, 461, 525, 567
An Interstate Labor Commission†.....445
An Interstate Labor Commission (Correspondence) 496
Apparatus, Railway Electrical, Development in During the Past Year.564
Apprentice Instruction† 493
Apprentice School, Pennsylvania R. R..154
Arrester, Spark, Van Horn and Endsley* 236
Articulated Locomotives—
Chicago Great Western R. R.*..... 62
Intercepting Valve of*..... 47
Mallet, Tests of, N. Y. C. & H. R. R. R.* 535
Mallet, Tests of, Norfolk & Western Ry. 452
Southern Pacific Co.*.....455
Weak Points in the Design of Mallets† 427
With Flexible Boilers, A. T. & S. F. Ry.* 95
With Superheater, Delaware & Hudson Co.* 427
Asbestos, Facts about.....429
Ash Pans, Locomotive* 51
Association of Railway Electrical Engineers, 4th Annual Convention..540
A. T. & S. F. Ry., Articulated Locomotives with Flexible Boilers*..... 95
A. T. & S. F. Ry., Sweetwater Terminal* 497
Automatic Hack Saw, High Speed*.....441
Automatic Paint Brush*..... 77
Automatic Steam Engine*.....442
Automatic Swivel Vise*.....525
Axle, Car Wheels Revolving Independently of the..... 91

B

Baggage-Buffet Cars, Steel, for Western Pacific Ry.* 367
Baggage Trucks, Buckwalter Electric*. 33
Baltimore & Ohio R. R., Electric Locomotive for* 43
Band, Spring, Stripper*..... 59
Band, The Convention* 299
Bentley to the General Foremen†.....365
Bettendorf Steel Car Plant*.....147
Blacksmith Shop of D. L. & W. R. R., Scranton, Pa.* 20
Bloomington, Ill., Locomotive Terminal of C. & A. R. R. at*.....408
Bloomington, Terminal Improvements at† 405
Blows and Pounds, Locomotive.....185
Bobbing Plates, Punch and Die for*...420
Boiler Check Facing Tool*.....419
Boiler Inspection, Federal Locomotive† 41
Boiler Troubles, Locomotive†..... 82
Boiler Tubes, Recent Developments in Testing 434
Books, New 29,, 114, 191, 523
Boring Tool, Twentieth Century*.....528
Boston & Maine R. R., Electric Locomotive at Hoosac Tunnel*.....501
Boston, Mass., Railway Electrification at 98
Brake Beam Deflection and Piston Travel* 396
Brake Details, Calculating Foundation..134
Brake Rod Jaws, Dies for*.....180
Brass Globe Valve, Storle*.....463
Brasses, Car Journal, Kinks for Handling, Collinwood Shops*..... 16
British Locomotive Developments..... 2
British Locomotive Standardization....110
British Rolling Stock, Development in† 534
Bronze and Iron, Corrosion Tests of...377
Brush, Automatic Paint*..... 77
Brush, New Air.....525
Buckwalter Electric Baggage Truck*... 33
Buffalo Brake Beam Co., Exhibit of at Atlantic City* 362
Burring and Hot Saw Machine for Forge Shop* 76
Business Depression, Repairs During Periods of† 199

C

Calculating Foundation Brake Details..134
Canadian Pacific Ry., 22 Stall Engine House, London, Ont.*.....448
Car Shop Swing Saw*..... 37
Car—
Accessories 241
Door, Jones Peerless* 33
Door, Williams All-Service*.....357
Journal Brass Kinks, Collinwood Shops* 16
Shop, Double Spindle Shaper for*...194

Sill Dresser* 353
Steel, Bettendorf Plant* 147
Steel, Oxy-Acetylene Process and the* 184
Stenciling* 133
Tanks, Largest Ever Constructed*.544
Tipping Installation, Novel German*. 50
Trimming, "Dayton"* 358
Ventilator, Allen* 400
Wheel, Nickelized Chilled.....106
Wheel, Revolving Independently of the Axle 91

Cars—
and Locomotives, Electric, Weight Transfer in* 144
Lifting Machines for Large Railway*.182
Motor, English Built* 109
Motor, German Gas Electric*.....113
Novel Freight* 437
Passenger, Headlinings of.....458
Steel, Baggage-Buffet, Western Pacific Ry.* 367
Carbon Monoxide in the Producer†...200
Care and Maintenance of Machine Tools in a Large Plant.....112
Care of Injured Persons.....447
Care of Small Tools*.....178
Care of the Injured, Pennsylvania R. R. 82
Cartoons* 201, 303
Cedar Hill Round House, N. Y., N. H. & H. R. R.*.....505
Change of Power, Time Required for, Penn. R. R..... 97
Chesapeake & Ohio Ry., Machine Equipment at Huntington Shop.....130
Chesapeake & Ohio Ry., Shop Improvement at Huntington*..... 83
Chicago & Alton R. R. Locomotive Terminal at Bloomington, Ill.*.....408
Chicago & Alton R. R., Shop Kinks at Bloomington, Ill. 510, 554
Chicago Burlington & Quincy R. R., Mikado Locomotive for*.....131
Chicago Burlington & Quincy R. R., Havelock Shops* 4
Chicago, Electrification of Railways*...124
Chicago Great Western R. R., Locomotive Standardization* 90
Chicago Great Western R. R., Mallet Articulated Locomotives for*..... 62
Chicago Great Western R. R., Safety Bureau 548
Chicago Great Western R. R., Stockton Terminal* 45
Chicago Railways Co. Shops, Motor Installation in* 166
Chief Interchange Car Ins. and Car Fmns. Assn.—
Meeting of Ex. Com. 157
Announcement of Meeting 391
Meeting of 407
12th Annual Convention.....466
Members of 529
Chilled Car Wheel, Nickelized.....106
Chuck, Columbia High Power*.....438
Chuck, Drill, Weavers Roller Jaw*.... 35
Civil Service in Railway Application†.. 1
Coal Passer, Ryan-Johnson*.....359
Coal Problem, The 188, 228
Coal Storage Pits, Illinois Traction System* 187
Cold, The Coming of†.....447
Collinwood Shops, L. S. & M. S. Ry., Kinks at the*..... 16
Columbia High Power Chuck*.....438
Coming of Cold, The†.....447
Commission, An Interstate Labor†.....445
Commission, An Interstate Labor (Correspondence) 496
Comparison of Valve Gears, A.*.....173
Comparisons are Odious*.....201
Concerning the Railway Situation†....494
Concrete, Reinforced, Round House, N. Y., N. H. & H. R. R.....505
Conservation of Men†..... 81
Consolidation Locomotives, Nash. C. & St. L. Ry.*.....372
Construction and Round House Work, Trials of 433
Construction of Locomotive Frames (Discussion, Am. Ry. M. M. Convention) 388
Convenient Flue Cutter, A*..... 18
Convention Band, The*.....299
Convention Exhibit, Our Own*.....241
Conventions—
American Railway Master Mechanics' Assn., 44th, Report of.....268
American Railway Master Mechanics' Assn., Discussion at the*.....378
Association of Railway Electrical Engineers, 4th Annual 540
Chief Interchange Car Inspectors and Car Fmns.' Assn., 12th Annual*.466
Master Car Builders' Assn., 45th, Report of 324
Master Car Builders' Assn., Discussion at the* 385
Mechanical, List of Exhibitors at the*.300
Master Car and Locomotive Painters' Assn., 42nd Annual 457
Railway Business Assn., Annual Meeting* 545
Railway Storekeepers' Association, Eighth Annual 205
Mechanical, for 1912.....500
The Mechanical, 1911†.....267
Traveling Engineers' Assn., 19th Annual, Report of*.....413
Corrosion Tests of Brass and Bronze..377
Counterbalance Weights, Reducing*.... 19
Coupler and Draft Equipment (Discussion—M. C. B. Convention).....380
Courtesy, W. L. Park on†.....406
Court Decisions, Recent.....114
Crane, Air Hoist and*..... 16
Crane, Freight Handling*.....439
Crank Shaper, "Queen City"*.....356
Crank Shaper, Stockbridge Two-Piece* 38
Crude Oil Engine, An Efficient*.....525
Cutter, Landis Staybolt*.....440
Cylinder Radii, Machining* 18

D

Dake Reversible Engine*.....440
"Dayton" Car Trimmings*.....358
Deflection, Brake Beam, and Piston Travel* 396
Delaware & Hudson Co., Mallet Superheater Locomotive* 427
Delaware, Lackawanna & Western R. R., Blacksmith Shop, Scranton, Pa.*.. 20
Delaware, Lackawanna & Western R. R., Washout System, Hampton Yards*.238
Denatu Alcohol in Railway Service, of 562
Departm of Transportation, An Imagin Day in the Office of the New 499
Descriptic A Vivid.....407
Design of llets, Weak Points in the†.493
Developme of Locomotive Tubes and Their atment* 375
Developm in British Rolling Stock† 534
Developme in Railway Electrical Appara During Past Year....564
Development ecent, in Testing Boiler Tubes 434
Die and Pun for Bobbing Plates*...420
Die Heads, S Adustable*.....116
Dies for Bra Rod Jaws*.....180
Direct Curren High Voltage Railway Power in itzerland* 123
Discussion—A Ry. M. M. Assn., Atlantic City nvention*.....385
Discussion—M. B. Assn., Atlantic City Conven* 378
Distribution and neration of Electric Power, Its A ication to Railroads.140
Door, Car, Willi All-Service*.....357
Double Spindle S er for Car Shop*..194
Draft and Couple quipment (Discussion, M. C. B. nvention).....380
Dramatic Locom e Mishap.....544
Draw Cut Shaper, orton*.....395
Dresser, New Car ll*.....353
Drill and Planer, A rican Radial*....354
Drill Chuck, Weave Roller Jaw*..... 35
Drill, Lamb Portabl 155
Drill, Portable Elect*.....527
Drilling Record, Hi Duty*.....397
Drills and Reamers, rtable, Electrically Operated* 399
Drills, Multi-Spindle, Several Operations for* 60
Dupo Yard Lighting* 137
Dynamite, Tests of.....151
Dynamometer Car, Fo tain Pens in*393

E

Economics of Tonnage Rang†*...200, 220
Economy, Fuel, Value of ractical Instruction on* 423
Economy in the Manufactu of Tools*. 88
Efficient Crude Oil Engine* 525
Efficiency in Railway Oper ion.....420
Efficiency, The Father of..... 97
Electric—
Baggage Truck, Buckwalter 33
Cars and Locomotives, Weig t Transfer in* 144
Drill, Portable* 527
Grinder, Hisey Portable*.....440
Locomotive, The† 406
Locomotive, Flange Wear on 163
Locomotives for the B. & M. l. R. at the Hoosac Tunnel*.....501
Locomotives for the B. & O. R. R.*.. 43
Locomotives for Penn. R. R.*.....105
Locomotives, Switching, for T. H. I. & E. Tract. Co.*.....517
Power, Generation and Distribution, Its Application to Railroads.....140
Railway Service, Alternating Current in* 429

05208

Electrical Apparatus, Railway, Development in During Past Year.564
Electrician Engineers, Assn. of Ry., 4th Annual Convention 540
Electrical Equipment in Railway Shops*.369
Electrically Operated Portable Drills and Reamers* 399
Electrification—
Boston, Mass., Railway at..... 98
in Italy* 163
of Chicago Railways*.....124
Progress in Railway.....557
Substitute for† 162
Elevating Water, Hydraulic Rams for*.195
Endsley and Van Horn Spark Arrester* 236
England and Germany, Locomotive Developments in 177
English Built Railway Motor Car*.....109
Engine, Crude Oil, An Efficient*.....525
Engine, Dake Reversible* 440
Engine House, 22 Stall at London, Ont., C. P. Ry.*.....448
Engine, Steam, New Automatic*.....442
Engines, Fire Fighting 540
Equipment—
Electrical, in Railway Shops*.....368
Locomotive (Our Own Convention Exhibit)* 249
Metal, Protection of 11
Shop (Our Own Convention Exhibit)* 253
Steel Passenger† 405
Executive Committee, Meeting of, C. I. C. I. & C. F. A. A.....157
Exhibit of Buffalo Brake Beam Co. at Conventions* 362
Exhibit of Independent Pneumatic Tool Co. 353
Exhibit of McConway & Torley Co.*..362
Exhibit, Our Own Convention*.....241
Exhibitors at the Mechanical Convention, List of*.....300
Extension, Shop† 81
External Throttle Valve*.....516

F

Facilities, Round House†.....446
Facing Tool, Boiler Check*.....419
Facts About Asbestos.....429
Father of Efficiency, The..... 97
Federal Locomotive Boiler Inspection†. 41
Fenestra Steel Window Sash*.....567
Files of an S. M. P., from the.....505
Fire Fighting Engines 540
Fireman's Record, A.....154
Fire Protection Feature in Construction of Penn. Station, New York..... 9
Flexible Boilers, Articulated Locomotives with, A. T. & S. F. Ry.*..... 95
Flexible Metallic Roof, Franklin*.....360
Flexible Packing, Universal*.....193
Flexible Staybolt, Tate*.....352
Flue Cutter, A Convenient*..... 18
Folding Steel Horse*.....395
Forge Shop, Hot Saw and Burring Machine for* 76
Forged Truck Lever, Solid, Construction of* 363
Form for Making Piston Rod Packing* 19
Foundation Brake Details, Calculating.134
Fountain Pens in Dynamometer Car*..393
Four Cylinder Locomotive, French*...512
Frame, Locomotive, Best Construction of (Discussion, Am. Ry. M. M. Convention) 388
Frames, Locomotive, Welding*.....465
Frames, Locomotive, Welding with Limited Facilities* 180
Franklin Flexible Metallic Roof*.....360
Freight Car, Novel*.....437
Freight Handling Crane*.....439
French Four Cylinder Locomotive*....512
From the Files of an S. M. P.....505
Fuel Economy, Value of Practical Instruction in* 423
Fuel, Specifications for†.....365

G

Gas-Electric Car, German*.....113
Gauge Glass Protector*.....438
Gaskets, Goetze* 154
General Foremens' Assn., International Railway 366
General Foremen, Bentley to the†.....365
General Layout for a Modern Locomotive Repair Plant*..... 69
Generation and Distribution of Electric Power and Its Application to Railroads 140
German Car Tipping Installation, Novel* 50
German Gas-Electric Car*.....113
Germany and England, Locomotive Developments in 177
Glass Protector, Gauge*.....438
Globe Valve, Storle Brass*.....463
Goetze Gaskets* 154
Going Some 500
Gondola, Last Gasp of a.....549
Gould & Eberhardt High Duty Shaper* 32
Government Ownership† 121
Grand Rapids Roundhouse, Pere Marquette R. R.* 543
Grand Rapids Shops, G. R. & I. Ry., Kinks at* 419, 459
Grinder, Hisey Portable Electric Parallel* 440
Group and Individual Motor Drive, Relative Advantages of 550
Growth of Motive Power, The†.....162

H

Hack Saw, High Speed Automatic*...441
Half Truth, A..... 61
Hampton Yards Roundhouse, D. L. & W. R. R., Washout System at*....238
Havelock Shops, C. B. & Q. R. R.*.... 4
Headlight Outfit, Moon* 397
Headlinings of Passenger Cars.....458
Heating and Lighting (Our Own Convention Exhibit)* 247
High Duty Drilling Record*.....397
High Duty Shaper, Gould & Eberhardt* 32
High Power Chuck, Columbia*.....438
High Speed Hack Saw, Automatic*...441
High Speed Locomotives, Steel Tires for* 552
High Voltage Direct Current Railway Power in Switzerland* 123
Hisey Portable Electric Parallel Grinder* 440
Hoist, Air, and Crane*..... 16
Hoosac Tunnel Electric Locomotives, B. & M. R. R.*.....501
Horse, Folding Steel*.....395
Hot Saw and Burring Machine for Forge Shop* 76
How About It Mr. MacBain?.....407
How It Happened.....447
Hunter Inserted Tooth Saw Blade*..568
Huntington Shops, C. & O. Ry., Improvements at* 83
Huntington Shops, C. & O. Ry., Machine Equipment 130
Hydraulic Rams for Elevating Water*.195

I

Illinois Traction System, Coal Storage Pits* 187
Imaginary Day in the Office of the Secretary of the New Department of Transportation 499
Independent Pneumatic Tool Co., Exhibit of the 353
India, The Smoke Problem in†.....122
Industrial Notes. 39, 78, 117, 156, 196, 265, 443, 528, 568
Inserted Tooth Saw Blade, Hunter*.568
Intercepting Valve of the Articulated Locomotive* 47
Interchange Inspection, M. C. B.....176
Interesting High Duty Drilling Record* 397
Interesting Locomotive Model*.....374
International Railway General Foremen's Assn. 366
Interstate Labor Commission, An†.....445
Interstate Labor Commission (Correspondence) 496
Iron and Bronze, Corrosion Tests of..377
Italy, Electrification in*.....163

J

Jaws, Brake Rod, Dies for*.....180
Jones Peerless Car Door*..... 33

K

Kansas City, Mexico & Orient Ry., Wichita Shops* 230

L

Labor Commission, An Interstate†.....445
Labor Commission, An Interstate (Correspondence) 496
Lake Shore & Michigan Southern Ry., Kinks at Collinwood Shops*..... 16
Lamb Portable Drill*.....155
Lamps, New Rear End.....516
Landis Staybolt Cutter*.....440
Largest Tank Car Ever Constructed*.543
Last Gasp of a Gondola.....549
Lathe, Libby Turret* 192
Lathe, Schumacher & Boye*.....358
Layout, General, for a Modern Locomotive Repair Plant*..... 69
Libby Turret Lathe*.....192
Lifting Magnets, Practical Application of* 63
Lifting Machine for Large Railway Cars* 182

90520

Light, Milburn, for Wrecking Outfit*... 77
Lighting at Dupo, Ill., Yard*.....137
Literature, New (See New Literature)
Light for Safety* 559
Lighting and Heating (Our Own Convention Exhibit)*.....247
List of Exhibitors at the Mechanical Conventions* 300
Lock Nut, New.....353
Locomotive—
Articulated, Intercepting Valve of the* 47
Ash Pans* 51
Boiler Inspection, Federal†..... 41
Blows and Pounds.....185
Boiler Troubles† 82
Developments, British 2
Developments, in England and Germany 177
Electric, The† 406
Electric, Weight Transfer in*.....144
Equipment (Our Own Convention Exhibit)* 249
Frame, Best Construction of (Discussion, Am. Ry. M. M. Convention) 388
Frame, Welding, with Limited Facilities* 180
Frames, Welding* 465
French Four Cylinder*.....512
Mallet, Tests of, Norfolk & Western.452
Netting Machine* 560
Model, An Interesting*.....374
Mishap, Dramatic 544
Operation, Third Man for†.....494
Repair Plant, General Layout for a Modern* 69
Specifications 108
Standardization, British 110
Standardization, Chicago Great Western R. R.*..... 90
Steam Turbines for.....139
Steel Tires for High Speed*.....552
Stokers, (Discussion, Am. Ry. M. M. Convention) 385
Terminal and Shops, K. C. M. & O. Ry.* 230
Terminal, Bloomington, Ill., Chicago & Alton R. R.*.....408
Tests of Mallet, N. Y. C. & H. R. R. R.* 535
Tests of Mallet, Norf. & Wn. Ry.*.452
Tubes, Development and Treatment of* 375
Locomotives—
Articulated, with Flexible Boilers, A. T. & S. F. Ry.*..... 95
Consolidation, Nash. C. & St. L. Ry.*.372
Electric, Flange Wear on†.....163
Electric for B. & M. R. R. at Hoosac Tunnel* 501
Electric for the B. & O. R. R.*..... 43
Electric for Penn. R. R.*.....105
Electric Switching for T. H. I. & E. Tract. Co.* 517
Heavy Passenger, Built at Wyoming Shop, Pere Marquette R. R.*.....423
Mallet Articulated, Chicago Great Western R. R.*..... 62
Mallet, for the Southern Pacific Co.*.455
Mallet Superheater, Delaware & Hudson Co.* 427
Mikado Type, C. B. & Q. R. R.*.....131
London, Ont., 22 Stall Engine House, C. P. Ry.* 448

M

McConway & Torley Co., Exhibit of the* 362
MacBain, Mr., How About It?.....407
Machine Equipment, Huntington Shop, C. & O. Ry.....130
Machine Tools in a Large Plant, Care and Maintenance of.....112
Machinery Plant, Model*.....518
Machining Cylinder Radii*..... 18
Magnets, Lifting, Practical Application of* 63
Maintenance, Superheater 172, 509
Mallet Articulated Locomotives (See Articulated Locomotives)
Mallets, Weak Points in the Design of!.493
Man Who Knows, The.....104
Manufacture of Tools, Economy in the. 88
Mason Safety Treads*.....400
Master Boiler Makers' Assn., Meeting of Executive Committee.....496
Master Car and Locomotive Painters' Assn., Annual Meeting.....457
Master Car Builders' Assn., Report of 45th Annual Convention.....324
Master Car Builders' Assn., Discussion at Atlantic City Convention*.....378
Master Car Builder Interchange Inspection 176
Master Car Builder, Reminiscences of a* 218, 377, 421, 503
Master Mechanics' Assn., Report of 44th Annual Convention 268
Master Mechanics' Assn., Discussion at Atlantic City Convention*....385
Master Mechanic's Dream, The.....122
Material, Reworking of Old..... 26
Mechanical Conventions, List of Exhibitors at* 300
Mechanical Convention, 1911†.....267
Mechanical Conventions for 1912.....500
Mechanical Refrigeration in Railway Work, Present Status of..... 72
Meeting of C. I. C. I. & C. F. Assn..407
Meeting of Executive Committee, C. I. C. I. & C. F. A. A.....157
Meeting, Spring, of A. S. M. E.....166
Members of the C. I. C. I. & C. F. Assn. 529
Men, Conservation of†..... 81
Metal, An Abrasion Resisting*.....240
Metal Equipment, Protection of..... 11
Metallic Roof, Franklin Flexible*.....360
Meter, Pop Valve*.....504
Mikado Type Locomotive, C. B. & Q. R. R.*.....131
Milburn Light, The*..... 77
Milling Machine, Vertical*.....116
Million a Day, A†..... 1
Mishap, Dramatic Locomotive 544
Missouri Pacific Buys Cars.....403
Model, Locomotive, An Interesting*..374
Model Machinery Plant*.....518
Modest Request, A†.....122
Modification of the Walchaert Valve Gear* 561
Month from Now, A†.....161
Moon Headlight Outfit*.....397
Morton Draw Cut Shaper*.....395
Motive Power, The Growth of†.....162
Motor Car, Railway, English Built*...109
Motor Car, Railway, German Gas-Electric* 113
Motor Drive, Group and Individual, Relative Advantages of 550
Motor Drive, Turntables with*.....515
Motor Drive, Variable Speed, Some Advantages of* 522
Motor Installation in Chicago Railway Co. Shops* 166
Multi-Spindle Drills, Several Operations for* 60

N

Nashville, Chattanooga & St. Louis Ry., Consolidation Locomotives* 372
Netting Machine, Locomotive* 560
New Books.....29, 114, 191, 390, 436, 523
New Literature 38, 77, 117, 155, 195, 392, 437, 462, 527, 568
New York Central & Hudon River R. R., Mallet Locomotive Tests*.535
New York, New Haven & Hartford R. R., Cedar Hill Roundhouse*.....505
New York, New Haven & Hartford R. R., Punctuality Record on*.....179
New York, Penn. Station at, Fire Protection Feature in Construction of. 9
Nickelized Chilled Car Wheel.....106
Norfolk & Western Ry., Tests of Hallet Locomotive 452
Notes on the Panama Canal..... 24
Novel Freight Car*.....437
Novel German Car Tipping Installation* 50
Nut Facing Machines, Victor*.....356
Nut, New Lock.....353

O

Obituary* 31, 75, 566
Office of the Secretary of the New Department of Transportation, An Imaginary Day in the.....499
Officers, Staff, Selection of†.....446
Oil Cup, Twentieth Century, Loose Pulley* 393
Oil Burners, Forges and Torches, Practical* 34
Oil Engine, Crude, An Efficient*....525
Oilers, Solid Steel*.....356
Oils and Paints (Our Own Convention Exhibit)* 248
Old Material, Reworking of..... 26
Operation, Locomotive, Third Man for†.494
Operation, Railway, Efficiency in.....420
Our Own Convention Exhibit*.....241
Ownership, Government† 121
Oxy-Acetylene Process and the Steel Car* 184
Oxy-Acetylene Welding, C. & N.-W. Ry. 548
Oxy-Acetylene Welding, Progress in†..121
Oxy-Acetylene Welds in Steel, Strength of* 170

P

Packing, Piston Rod, Form for Making* 19
Packing, Universal Flexible* 193
Paint Brush, Automatic* 77
Paint, "Steelkote"* 36
Paints and Oils (Our Own Convention Exhibit)* 248
Panama Canal, Notes on the..... 24

Parallel Grinder, Hisey Portable Electric* 440
Park on Courtesy† 406
Passenger Cars, Headlinings of.....458
Passenger Equipment, Steel†.-.....405
Passenger Locomotive Built at Wyoming Shops, Pere Marquette R. R.* 423
Patents, Railway Mechanical*.40, 80, 120, 160, 198, 266, 404, 444, 492, 532, 570
Paying Men to Think† 268
Pennsylvania R. R.—
Apprentice School 154
Electric Locomotives for* 105
New York Station, Fire Protection Feature in Construction of..... 9
Time Required for Change of Power 97
Pere Marquette R. R., Passenger Locomotive Built at Wyoming Shop*..423
Pere Marquette R. R., Roundhouse at Grand Rapids* 543
Periods of Business Depression, Repairs During† 199
Personals* 29, 74, 115, 153, 191, 239, 391, 435, 461, 525, 565
Piece Work, Quality* 402
Piston Rod Packing, Form for Making* 19
Piston Travel and Brake Beam Deflection* 396
Pits, Coal Storage, Illinois Traction System* 187
Planer, American Radial Drill and*...354
Plant, A Model Machinery* 518
Plant of U. S. Light & Heating Co.*...350
Plates, Bobbing, Punch and Die for*..420
Pneumatic Spring Band Stripper, Springfield Shops* 59
Pop Valve Meter* 504
Portable Drill, Lamb* 155
Portable Electric Drill* 527
Portable Electric Drills, Van Dorn & Dutton* 399
Portable Electric Parallel Grinder, Hisey* 440
Pounds, Locomotive Blows and.....185
Power, High Voltage Direct Current in Switzerland* 123
Practical Application of Lifting Magnets* 63
Practical Instructions in Fuel Economy, Value of* 423
Practical Oil Burners, Forges and Torches* 34
Present Status of Mechanical Refrigeration in Railway Work..... 72
Prevention of Accidents 373
Problem, The Coal 188, 228
Producer, Carbon Monoxide in the†....200
Progress in Air Brake Apparatus for Electric and Steam Service, Recent. 66
Progress in Oxy-Acetylene Welding†..121
Progress in Railway Electrification..557
Proper Procedure, The 46
Prospectus† 2
Protection of Metal Equipment..... 11
Protector, Gauge Glass* 438
Protest, A 15
Pump Troubles..... 75
Pumps, Air, Removing* 180
Punctuality Record, N. Y., N. H. & H. R. R.* 179
Punch and Die for Bobbing Plates*..420

Q

Quality Piece Work 402
"Queen City" Crank Shaper* 356

R

Radial Drill and Planer, American*..354
Radii, Cylinder, Machining* 18
Rags, Sanitary Wiping* 194
Railway Accidents 407
Railway Business Assn., Annual Meeting* 545
Railway Electrical Apparatus, Development in During Past Year..564
Railway Mechanical Patents (See Patents).
Railway Operation, Efficiency in.....420
Railway Situation, Concerning the†....494
Railway Storekeepers' Association, Annual Convention 205
Rams, Hydraulic, for Elevating Water*.195
Rating, Tonnage, Economics of†*..200, 220
Rear End Lamps, New 516
Recent Court Decisions 114
Recent Developments in Testing Boiler Tubes 434
Recent Progress in Air Brake Apparatus for Electric and Steam Service. 66
Recommended Practice and Standards, Revision of (Discussion, M. C. B. Convention) 378
Record, A Fireman's 154
Record, Punctuality, N. Y. N. H. & H. R. R.* 179
Record, High Duty Drilling* 397
Reducing Counterbalance Weights*.... 19
Refrigeration, Mechanical, in Railway Work, Present Status of..... 72
Reinforced Concrete Round House, N. Y. N. H. & H. R. R.* 505
Relative Advantages of Group and Individual Motor Drive* 550
Reminders 407
Reminiscences of a Master Car Builder* 218, 377, 421, 503
Removing Air Pumps* 180
Repair Plant, Locomotive, General Layout for a Modern* 69
Repairs during Periods of Business Depression† 199
Report of 44th Annual Convention, A. R. M. M. Assn 268
Report of 45th Annual Convention, M. C. B. Assn 324
Report of 19th Annual Convention of Traveling Engineers' Assn.*....413
Retrospection† 42
Reversible Engine, Dake* 440
Revision of Standards and Recommended Practice (Discussion, M. C. B. Convention) 378
Reworking of Old Material..... 26
Roof, Franklin Flexible Metallic* 360
Roller Jaw Drill Chuck, Weavers*..... 35
Roundhouse Facilities† 446
Roundhouse at Grand Rapids, Pere Marquette R. R.* 543
Roundhouse, Reinforced Concrete, N. Y. N. H. & H. R. R.* 505
Roundhouse Work, and Construction, Trials of 433
Ryan-Johnson Coal Passer* 359

S

Safety Appliance Act† 533
Safety Bureau, Chicago Great Western R. R. 548
Safety, Light for* 559
Safety Treads, Mason* 400
Sanitary Wiping Rags* 194
Sash, Fenestra Steel Window* 567
Saw Blade, Hunter Inserted Tooth*..568
Saw, Hack, Automatic High Speed*...441
Saw, Swing, Car Shop* 37
Schley, Admiral, Visits the Convention* 323
School, Apprentice, Pennsylvania R. R..154
Schumacher & Boye Lathe* 358
Scranton, Pa., Blacksmith Shop of D., L. & W. R. R. at* 20
Secretary of the New Department of Transportation, An Imaginary Day in the Office of the 499
Selection of Staff Officers† 446
Several Operations for Multi-Spindle Drills* 60
Shapers—
Double Spindle, for Car Shop* 194
High Duty, Gould & Eberhardt*..... 32
Morton Draw Cut* 395
"Queen City" Crank* 356
Stockbridge Two-Piece Crank*..... 38
Stockbridge* 464
Shop—
Car, Double Spindle Shaper for*....194
Equipment (Our Own Convention Exhibit)* 253
Extension† 81
Kinks* ...16, 57, 180, 419, 459, 510, 554
Washing Machine for* 568
Shops—
Chicago Railways Co., Motor Installation in* 166
Electrical Equipment in Railway*....368
Grand Rapids, of G. R. & I. Ry., Kinks at* 419
Havelock, Chicago Burlington & Quincy R. R.* 4
Huntington, C. & O. Ry., Improvements at* 83
Huntington, C. & O. Ry., Machine Equipment in 130
Scranton, Pa., Blacksmith, D. L. & W. R. R.* 20
Springfield, Ill., Wabash R. R.*..... 57
Wichita, Kan., K. C. M. & O. Ry.*..230
Wyoming, of Pere Marquette R. R., Locomotive Built at* 423
Side Bearing Truck* 363
Side Rods, A Suggestion Concerning*.. 65
Sill Dresser, Car* 353
Situation in Brief† 122, 161, 199
Situation, the Railway, Concerning the†.494
Slotting Tools, Commutator* 193
Small Tools, Care of* 178
Smoke Problem in India, The† 122
Sneak Advertiser, A 190
Solid Adjustable Die Heads* 116
Solid Forged Truck Lever Construction* 363
Solid Steel Oilers* 356
Southern Pacific Co., Mallet Locomotives for the* 455
Spark Arrester, Van Horn & Endsley*.236

Specifications for Fuel†.....365
Spring Meeting, A. S. M. E.....166
Specifications, Locomotive.....108
Springfield Shops, Wabash R. R., Kinks at* 57
Staff Officers, Selection of†.....446
Standardization, Locomotive, British..110
Standardization, Locomotive, Chicago Great Western R. R.*..... 90
Standards and Recommended Practice, Revision of (Discussion, M. C. B. Convention) 378
Staybolt Cutter, Landis* 440
Staybolt, Tate Flexible*.....352
Steam Engine, New Automatic*.....441
Steam Heat, Train Pipe Connections for (Discussion, M. C. B. Convention) 384
Steam Turbines for Locomotives.....139
Steel Baggage-Buffet Cars, Western Pacific Ry.* 367
Steel Car, Oxy-Acetylene Process and the* 184
Steel Car Plant, Bettendorf*.....147
Steel Horse, Folding* 395
Steel Oilers* 356
Steel Passenger Equipment†.....405
Steel Tires for High Speed Locomotives* 552
Steel Window Sash, Fenestra*.....567
Steels, Swedish 541
"Steelkote" Paint* 36
Stenciling, Car* 405
Stockbridge Shaper* 464
Stockbridge Two-Piece Crank Shaper* 38
Stockton Terminal, Chicago Great Western R. R.*..... 45
Stokers, Locomotive (Discussion, Am. Ry. M. M. Convention).....385
Storage Pits, Coal, Illinois Traction System* 187
Storekeepers, Railway, Association.....205
Storle Brass Globe Valve*.....463
Story of the Air Brake..... 28
Strange if True 31
Strength of Oxy-Acetylene Welds in Steel* 170
Structures 28
Subjects for Discussion, Traveling Engineers' Assn. 1912.....515
Substitute for Electrification, A†.....162
Suggestion Concerning Side Rods, A* 65
Superheater, Locomotive, Mallet, D. & H. Co.*.....427
Superheater Maintenance 172, 509
Swedish Steels 540
Sweetwater Terminal, A. T. & S. F. Ry.* 497
Swing Saw, Car Shop*..... 37
Switching Locomotives, Electric, T. H. I. & E. Tract. Co.*.....517
Switzerland, High Voltage Direct Current Railway Power in*.....123
Swivel Vise, Automatic*.....525

T

Tank Car, Largest Ever Constructed*544
Tate Flexible Staybolt*.....352
Terminal at Sweetwater, Texas, A. T. & S. F. Ry.*.....497
Terminal, Locomotive, at Bloomington, Ill., C. & A. R. R.*.....408
Terminal and Shop, Locomotive, K. C. M. & O. Ry.*.....230
Terminal Improvement at Bloomington† 405
Terminal, Stockton, Chicago Great Western R. R.*..... 45
Terre Haute, Indianapolis & Eastern Tract. Co., Electric Locomotives*..517
Testing Boiler Tubes, Recent Developments in 434
Tests, Corrosion, of Iron and Bronze..377
Tests of Dynamite.....151
Tests of Mallet Locomotive, N. Y. C. & H. R. R. R.* 535
Tests of Mallet Locomotive, Norfolk & Western Ry.* 452
Third Man for Locomotive Operation†.494
Throttle Valve, External*.....516
Time Required for Change of Power, Penn. R. R..... 97
Tires, Steel, for High Speed Locomotives* 552
Toledo Terminal R. R., Shopping Engine in Record Time.....500
Tonnage Rating, Economics of†*..200, 220
Tools, Economy in the Manufacture of. 88
Tools, Machine, Care and Maintenance of in a Large Plant.....112
Tools, Slotting, Commutator*.....193
Tools, Small, Care of*.....178
Tractor, Turntable, for Heavy Duty*.. 37
Train Lighting (Discussion, M. C. B. Convention) 378
Train Pipe Connections for Steam Heat (Discussion, M. C. B. Convention).384
Traveling Engineers' Association†.....405
Traveling Engineers Assn., Announcement of Annual Convention.....366
Traveling Engineers' Assn., Committee Subjects, 1912.....515
Traveling Engineers' Assn., Report of 19th Annual Convention*.....413
Treads, Mason Safety*.....400
Trials of Construction and Round House Work 433
Trimmings, "Dayton" Car*.....358
Truck Lever Construction, Solid Forged* 363
Truck, New Side Bearing*.....363
Triumph Electric Co., Machinery Plant of* 518
Truth, A Half..... 61
Tubes, Boiler, Recent Developments in Testing 434
Tubes, Locomotive, Development and Treatment of* 375
Turbines, Steam, for Locomotives.....139
Turntable Tractor for Heavy Duty*... 37
Turntables with Motor Drive*.....515
Turret Lathe, Libby*.....192
Twentieth Century Boring Tool*.....528
Twentieth Century Oil Cup*.....393
Twenty-two Stall Engine House, London, Ont., C. P. Ry.*.....448
Two-Piece Crank Shaper, Stockbridge* 38
Types of Valve Gears, New*.....462

U

U. S. Light & Heating Co., Plant of*..350
Universal Flexible Packing*.....193
Use of Denatured Alcohol in Railway Service 562

V

Value of Practical Instruction on Fuel Economy* 423
Valve Castings, Why They Leak..... 42
Valve—
External Throttle*.....516
Gears, A Comparison of*.....173
Gears, New Types of* 462
Gears, Walschaert, Modification of*561
Globe, Storle Brass*.....463
Intercepting, of the Articulated Locomotive* 47
Pop, Meter* 504
Van Horn & Endsley Spark Arrester*.236
Variable Speed Motor Drive, Some Advantages of* 522
Ventilators, Allen Car*.....400
Vertical Milling Machine*.....116
Victor Nut Facing Machines*.....356
Vise, Automatic Swivel*.....525
Vivid Description 407

W

Wabash R. R., Kinks at Springfield Shop* 57
Washing Machine for Shop*.....568
Walschaert Valve Gear, Modification of* 561
Washout System at Hampton Yards Round House, D. L. & W. R. R.*..238
Water, Hydraulic Rams for Elevating*.195
Weak Points in the Design of Mallets† 493
Wear, Flange, on Electric Locomotives† 163
Weavers Roller Jaw Drill Chuck*..... 35
Western Pacific Ry., Steel Baggage-Buffet Cars* 367
Weight Transfer in Electric Cars and Locomotives* 144
Weights, Counterbalance, Reducing*... 19
Welcome Man, The.....460
Welding Locomotive Frame with Limited Facilities* 180
Welding Locomotive Frames*.....465
Welding, Oxy-Acetylene, C. & N.-W. Ry. 548
Welding, Oxy-Acetylene, Progress in†..121
Welds, Oxy-Acetylene, Strength in Steel* 170
Why Valve Castings Leak..... 42
Wichita Shops, K. C. M. & O. Ry.*....230
Williams All-Service Car Door*.....357
Window Sash, Fenestra Steel* 567
Wiping Rags, Sanitary*.....194
Wyoming Shops, Pere Marquette R. R., Heavy Locomotive Built at*.....423

Y

Yard Lighting, Dupo, Ill.*.....137

RAILWAY MASTER MECHANIC

Established 1878

Published by THE RAILWAY LIST COMPANY

WILLIAM E. MAGRAW, Pres. and Treas. CHAS. S. MYERS, Vice-Pres.
LYNDON F. WILSON, Editor C. C. ZIMMERMAN, Bus. Mgr.
O. W. MIDDLETON, Assoc. Editor J. M. CROWE, Mgr. Cent. Dist.
WARREN EDWARDS, V. P. & Assoc. Editor J. K. GREENE, Sec.

Office of Publication: 315 Dearborn Street, Chicago
Telephone, Harrison 4948
Eastern Office: 50 Church Street, New York
Telephone Cortlandt 5765
Central Office: House Bldg., Pittsburg, Pa.

A Monthly Railway Journal

Devoted to the interests of railway power, car equipment, shops, machinery and supplies.
Communications on any topic suitable to our columns are solicited.
Subscription price, $2.00 a year; to foreign countries, $2.50, free of postage. Single copies, 20 cents. Advertising rates given on application to the office, by mail or in person.
In remitting make all checks payable to The Railway List Company.
Papers should reach subscribers by the 16th of the month at the latest. Kindly notify us at once of any delay or failure to receive any issue and another copy will be very gladly sent.

Entered as Second-Class Matter June 18, 1895, at the Post Office at Chicago, Illinois, Under Act of March 3 1879.

Vol. XXXV. Chicago, January, 1911 No. 1

CONTENTS.

Editorial—
Civil Service in Railway Application 1
A Million a Day 1
Prospectus 2
British Locomotive Development 2
Havelock Shops, C., B. & Q. R. R. 4
Fire Protection in the Pennsylvania Station, New York.. 9
Protection of Metal Equipment 11
A Protest 15
Shop Kinks 16
Air Hoist and Crane 16
At Collinwood, L. S. & M. S. Ry 16
A Convenient Flue Cutter 18
Machinery Cylinder Radii 18
Reducing Counter-Balance Weights 19
Form for Making Piston Rod Packing 19
Blacksmith Shop of the D. L. & W. R. R. 20
Notes on the Panama Canal 24
Re-Working of Old Material 26
Story of the Air Brake 28
New Books 28
Personals 29
Obituary 31
Strange if True 31
Among the Manufacturers 32
A High Duty Shaper 32
Jones Peerless Car Door 33
Buckwalter Electric Baggage Trucks 33
Practical Oil Burners, Forges and Torches 34
Weaver Roller Jaw Chuck 35
Steelkote Paint 36
Car Shop Swing Saw 37
Stockbridge Two-Piece Shaper 37
New Literature 38
Industrial Notes 39
Railway Mechanical Patents 40

CIVIL SERVICE IN RAILWAY APPLICATION.

The recent general promotion in the official ranks of the Chicago & Northwestern Ry., is an evidence of the excellent application of the principles of "civil service." The employees' magazine of this railway makes a point of the fact that each of the promotions following the retirement of the past president, Marvin Hughitt, concerned men who, as old employees of the company, had never allowed their "jobs to overtake their knowledge." By putting this maxim into effect, every employee, no matter what his present status, has a chance at the highest position. The unsigned letter on another page of this issue under the heading, "A Protest," is written by a man who probably does not believe in this principle, or who, believing, does not see the application. He is under the impression that his superiors have no right to their positions as such and therefore does not make a good subordinate. Hardly anyone will dispute the fact that there are few if any heads of railway departments who were not at one time gool subordinates. It should be borne in mind that a good subordinate always is prepared to take, temporarily at least, the place of his immediate chief. No man is able to do this who does not keep ahead of his present duties. The quick and broad intelligence which goes with the prompt and faithful carrying out of orders furnishes the basis upon which orders are issued. The man who is content merely with the doing of what is before him to-day, who prepares himself simply for his present task, may be reasonably sure that he never will be asked to assume more exacting or more responsible duties. So long as his education or his knowledge does not reach beyond his job, he does not fit himself for more than he now is called upon to perform, his job never will grow. He will stand still while others, perhaps of fewer years in the service, will be hurrying past him because they have developed that merit which means advancement.

At times it seems that the North-Western's system of "Civil Service" has anything but a general application. Men are sometimes taken from other systems and put in over the heads of the older employees. It must be remembered, however, that these men were subordinates somewhere at sometime and a consideration of the railway field as a whole, instead of system by system, will show a common level or balance. If, therefore, a man has become stationary in a subordinate position he can rest assured that he has in some important particular failed to prepare himself for promotion. He will not believe in this doctrine, however; but will continue to prate of "pulls" and the inefficiency of his superiors until, no longer of use even in a position of minor importance, he is cast aside as scrap. The pitiful feature of his case is that he has never been able to properly locate the cause of his failure.

A MILLION A DAY.

"Efficiency" is not a new term in railway management, as the daily press would lead many to believe from its widely published reports of declarations by Louis D. Brandeis before the Interstate Commerce Commission. Probably no other question gives railway presidents and managers as

many hours of thought and sleepless nights as this one. That it has been raised at this time by interests fundamentally not in harmony with the railway' side of the rate question does not make it new to them. The very fact that railway officials generally welcome any change for the better in their methods which Mr. Brandeis can offer shows that they are doing their best and are willing to do anything to help the work along.

It is also a fact that the Atchison, Topeka & Santa Fe has introduced methods that have produced splendid results in reducing costs. The officials of other railways in the country are thoroughly familiar with what the Santa Fe has done and are now working to accomplish similar results on their own systems by methods applicable to circumstances. Mr. Brandeis' own ideas were being put into effect by the big systems probably long before he thought of them. He is an astute lawyer and a learned man, but it hardly seems reasonable to suppose that he could successfully undertake the management of a great railroad system with its complex questions and intricacy of detail that takes years for the best brains to master.

It will not be denied that some railway systems are not operated by the most efficient methods and if raising the question at this time will hasten the work of introducing newer tools and appliances, better systems for handling men, machines and equipment, and higher efficiency all around, then Mr. Brandeis has done some good. It will further be admitted that there had been a tendency among railway managements during the past two years to use equipment, supplies and methods that could not in the nature of things be expected to make for efficiency. It sometimes happens that the question of dividends now is of paramount importance, and where the installation of more efficient methods would mean a great first cost, the management has decided, wisely or not, for the dividends. Railway men who have devoted their lives to the management of these great industries do not view the statements of Mr. Brandeis with great enthusiasm or hopefulness.

PROSPECTUS.

(With apologies to the popular magazines.)

Of course we expect during the coming year to make the "Master Mechanic" bigger and better, not because we care whether our two (2) subscribers read it or not, but because our prospective advertisers will figure that it is good enough to read, and when the advertiser backs up this opinion on a cash basis—well, that's when our wife gets the new hat to wear on the Board Walk.

We are not sure who will be numbered among our contributors during the year. We have seen a number of articles in club proceedings and among the pages of our esteemed contemporaries marked "By So and So" and "By So and So" (all big men in the railway field); in fact, we have published a good many of them ourselves. We have always had doubts as to their genuineness, however. We have the honor of personal acquaintance with most of these men and several of them, at least, remind us of bivalves—anyway, they have some of the characteristics. Then, too, their chief clerks and shop engineers have often evidenced a surprising knowledge of their themes before as well as after publication.

We believe we are safe in saying that the following will positively not be contributors: J. F. Deems (too busy), J. F. DeVoy (too modest), J. T. McGrath (he tried it once), Chas. E. Fuller (too sore; we foozled his picture two years ago), Wm. Boughton (same reason), F. H. Clark (he prefers that others do the talking) and Joseph Taylor (too affluent already).

Our secretary of war reports that we are at peace with our contemporaries. We don't believe it. We have seen too much of our president during the last days of the old year. Even as we go to press, we have evidence to the contrary.

We used to ask for suggestions and advice on running this paper. We have quit. Everybody thinks he can beat us hands down, and we can't afford to risk our feelings. Any really good advice must positively not reach the editorial department.

A Happy New Year to all.

BRITISH LOCOMOTIVE DEVELOPMENTS.

By Thomas Reece.

I have written previously in the "Railway Master Mechanic" upon the steady attention which is being paid in the United Kingdom to the question of superheating for locomotives. Since Lancashire and Yorkshire Locomotive Superintendent Hughes raised the question at a big meeting last spring, superheating for locomotives has been always with us. Early communications of mine to the "Railway Master Mechanic" have dealt with superheating in the United Kingdom. I might now extend these remarks by dealing briefly with superheating on European Continental locomotives—summarizing for this purpose a series of four lectures just delivered by Professor Sauvage in connection with the faculty of engineering at the University of London.

After having dealt with the general properties of superheated steam and its advantages for steam engines generally, the lecturer pointed out that its application to locomotives was by no means new, the patents of Quillac and Moncheuil dating back to the year 1849 and 1850. It was only during the past few years, however, that any real advance had been made, and in this connection excellent work had been done by Schmidt in Germany, whose system had been largely adopted on continental railways. Another form of superheater, the Pielock, had been adopted on the St. Gothard and other railways. It was necessary that the driver should possess the means of regulating the superheat, but this could not be accomplished with all systems. Herr Schmidt favored as high a degree of superheat as possible, and 120 deg. C. was commonly employed. Various problems arose in connection with lubrication, and it was necessary to make use of special oils with a high-flash point.

Experience has shown the economy that resulted from the use of superheaters, and it was interesting to compare the results of a series of trials which had been carried out on French railways between the four-cylinder simple locomotive working with superheated steam and the four-cylinder compound locomotive working with saturated steam, the general dimensions of the engine being the same in each case. The steam pressure employed in the case of the compound engine was about 227 pounds per square inch, and in the case of the simple engine it was 190 pounds per square inch. The results of the experiments showed an economy in coal consumption for the simple engine of 13 per cent and an economy in water consumption of 15 per cent. Subsequent service tests gave similar results, and it would seem that the economy of the simple engine, using superheated steam, in comparison with the compound working with saturated steam, was well established. The question arose whether it would not be possible to combine the advantages of compounding and superheating, and although there were some difficulties in the application of superheating to compound engines, a number of experiments had been carried out by the Eastern Railway of France, by the Paris-Lyons and Mediterranean Railway, and by other companies. The trials were effected with ten ordinary four-cylinder compound locomotives and ten four-cylinder compound locomo-

tives employing superheated steam. The result of the trials showed an economy of 8 per cent in coal consumption in favor of the superheated engines. Similar tests were afterwards carried out between groups of ten compound goods engines, and in that case little, if any, economy was shown between the two classes of locomotives.

A series of experiments had, declared the professor, also been carried out by the Eastern Railway of France on a method of superheating in two stages. The first part of the superheater received the steam issuing from the boiler, and moderately superheated it before it passed into the high pressure cylinders. The exhaust from the high pressure cylinders afterwards passed into the second part of the superheater, and was again superheated before reaching the low pressure cylinders. The trials, which had been carried out quite recently, had not, so far, yielded any very difficult results. Experiments had also been made in connection with compound locomotives, in which only the low-pressure steam was superheated, but the experiments were undertaken rather with a view to avoiding the cost of the mechanical alterations involved in superheating high-pressure steam in existing locomotives. The results of these trials seemed to show that, from the point of view of economy, there would possibly be a reversion to the simple engine working with superheated steam. The matter had, however, to be considered from another aspect. The growing demand for more power with which to provide for the increased weight and speed of trains was a very important matter, and one reason for the introduction of the compound locomotive was that it was more powerful than a simple locomotive. The cost of fitting a superheater on Belgian railways has been found to range from about $800 to $1,000.

Although superheating has not been employed in Great Britain to anything like the extent to which it has been adopted on the Continent, a good deal of work is now being done in this direction. The Great Western Railway has 150 locomotives in service which are fitted with superheaters, and an additional 100 locomotives are being similarly equipped. It is interesting to note that on the Lancashire and Yorkshire Railway the comparative trials carried out confirm the conclusions reached by Continental engineers as to the advantages of superheating, and it had been shown in that series of experiments that the hauling power of the locomotive fitted with a superheater is increased by 10 per cent. On the Canadian Pacific Railway 475 locomotives are equipped with superheaters, and Mr. Vaughan states that the experience of the Canadian Pacific is that in freight service with superheating there is an economy of 10 to 15 per cent and in passenger service a gain of 15 per cent. It has been found that with proper attention there is no increase in the cost of maintenance. All new locomotives on the Canadian Pacific are being fitted with superheaters.

Looking back at some of the interesting types of locomotives exhibited at the Brussels exhibition this year, special attention might be drawn to some of the French and Belgian exhibits. Belgium showed two new types of powerful engines. One of these was a new freight engine having ten wheels coupled. A four-wheeled bogie is constituted by a leading pair of small wheels, and by the first pair of driving wheels, in accordance with the Krauss-Helmholtz system. The weight of the main frame is carried on a central cradle swung from four oblique links on the bogie frame, the pivot being hemispherical in form and traversed horizontally by a safety pin. The side frames of the bogie are connected at their back end by a transverse spring sandwiched in a cross frame, which is suspended by swing links to the underside of the leading driving axle-boxes. A bogie of this construction is also exhibited separately, and labeled "Flamme system."

In both the two new engine types the system of divided driving axles is employed, with the two inside cylinders connected to the second driving axle and the two outside cylinders to the third axle, the "balancing" being effected through the coupling rods. If the outside connected pair of wheels should slip the whole stress of the four pistons must be thrown, directly and indirectly, on the cranked axle, or if the inside connected pair should slip the efforts of all four pistons are concentrated, through the connecting and side rods, on the outside wheel pins. If the axle or the pins were not calculated to support such occasional stresses the parts would fail. The Belgian State Railways compound engines, of which there is now a large number in service, do not figure at the present exhibition.

Representing the French Northern Railway is a marine water-tube fire-box locomotive for its express service, in which the system of water tubes has permitted the raising of the pressure to near that which is common in water-tube boilers—in this case 250 pounds. This engine is interesting from the alleged fact that the drivers, according to the statement of the official in charge, work this engine with a cut-off of only 20 per cent in the high pressure cylinders, and also of 20 per cent in the low-pressure cylinders. This refers to trains of about 300 tons, on level line, at sixty miles per hour. Such equality of cut-offs is of the greatest importance for the successful working of compound locomotives; the power is then nearly equally divided between the two groups of cylinders; the efforts of all four crank pins are balanced, the engine runs steadily, and the greatest steam economy is realized. Under these conditions two sets of valve mechanisms and one reversing gear could be dispensed with, or two valves could be made to distribute to four cylinders. The engine is effectively a compound locomotive, but it works with a 20 per cent boiler steam admission to two cylinders only, in place of the corresponding admission of 20 per cent usually required for four cylinders, of a similar diameter, in simple engines.

Another interesting French engine is an Eastern Railway express locomotive designed for the fastest heavy main line traffic, to which is applied a cascade superheater of interesting construction. This superheater differs in its superheating tubes from the common U-pipe smoke-tube arrangement first introduced by Jean de Montcheuil for application to two types of express engine which were used about 1847 and 1848 on the Troyes to Montereau section of the railway, now the main line Paris to Swiss frontier.

The system is devised to obtain great superheating effect with small heating surfaces. The straight-flow arrangement of U-pipes as in the early de Montcheuil system, is aban-

doned for a straight-flow delivery with helicoidal-flow return.

Briefly described, the large flues of 125 mm. inside and 133 mm. outside diameter contain annular or Joly cul-de-sac superheating elements, consisting of a large tube with a closed end, reaching to within 600 mm. of the fire-box, and having eight external ribs along its whole length. The gases from the fire pass between these two surfaces, licking the radiating ribs. Inside the union connecting with the annular and the central orifices is provided at the smoke-box end, and joined by short pipes to the respective headers for superheated and saturated steams.

Havelock Shops, Chicago, Burlington & Quincy R. R.

To facilitate the handling of repairs to the locomotives running on the Lines West of the Missouri river, the Chicago, Burlington & Quincy R. R. is constructing some extensive additions to its shop equipment at Havelock, Neb. Havelock is located about four miles east of Lincoln, on the main line between Chicago and Denver. Lincoln is an important point on the Burlington, being the junction of the lines running between St. Louis, Kansas City and Billings, Mont., and between Chicago and Denver, as well as the terminus of several branch lines radiating in all directions.

The old shops at Havelock, which consisted of machine and erecting shops, boiler shops, smith shop and power plant, were built in 1894. The introduction of heavy power for both freight and passenger service and the large number of Mallet compounds in use has rendered the old shop equipment inadequate for handling in an economical and rapid manner the necessary repairs to locomotives.

General View of Havelock Shop Buildings.

The improvements at Havelock consist of a new erecting and machine shop, power house, storehouse, casting platform with overhead crane, and oil house. The new building, together with those now existing and shown as shaded areas on the general plan, will give a shop equipment as follows:

Erecting and machine shop	600 x 215 ft.
Boiler shop	400 x 130 ft.
Smith shop	300 x 80 ft.
Storehouse	500 x 80 ft.
Power house	120 x 87 ft.
Car machine shop	200 x 80 ft.
Brass foundry	140 x 56 ft.
Oil house	65 x 36 ft.

In addition to the above building, space has been reserved on the area available for shop use to construct an extensive car repair plant for both passenger and freight equipment.

Erecting and Machine Shop.

This building is somewhat similar to some other western shops built in recent years, in that it has a longitudinal erecting shop. An important difference from these shops, however, is that the boiler work is not done in the same building and the machine shop is located on one side only of the erecting shop instead of on both sides, as at Topeka on the Santa Fe and at Parsons on the Missouri, Kansas & Texas.

The building consists of an erecting and two machine bays and has a cross section wholly unlike any other longitudinal shop in this country. The erecting shop has a height of 42 feet under roof trusses, a clear width of 90 feet and a distance between track centers of 30 feet 6 inches. Three tracks run the entire length of the erecting shop. The machine bays are 60 feet wide center to center of columns. The bay in which the heavy motor-driven tools will be located has a clear height under roof trusses of 32 feet, while the small tool bay, which will contain both group and motor-driven tools, has a similar height of 19 feet. A very substantial steel construction forms the framework of the building. The walls are constructed on 1-inch channel studding tied with iron straps to the steel girths and covered with galvanized expanded metal, wired on. To the expanded metal is applied four coats or layers of cement plaster, each ¾ inch thick, which makes a wall having good weather resisting qualities and sufficient thickness to imbed the steel and protect same from destructive corrosion.

The floor of the erecting shop is of concrete, cast in 5-foot squares, and has 1½-inch crowning between tracks to allow drainage to pits. The floor of the machine bays consists of a course of 3-inch Burnettized Oregon fir laid on tamped Platte River sand, the boards being nailed together. Over this sub-floor is laid a wearing surface of 1⅛-inch maple factory flooring nailed with heads countersunk ¼ inch. The roof of the building consists of 2-inch fir sheathing laid on 6x14-inch purlines and covered with five-ply pitch felt and gravel laid accordingly to the Barret specifications. All of the window frames, sash and doors in the building are of wood, and these portions, together with the roof, floor, tool room partitions and work benches, comprise all of the combustible material in the building. The erecting shop is equipped with two 4-motor girder cranes, each having a main hoist capacity of 75 tons, and an auxiliary hoist capacity of 15 tons. Serving the outside tracks are four 3-motor 3-ton traveling wall cranes, two on each side of the shop. This type of crane is found only in one other locomotive repair shop in the country, the new erecting shop of the Pennsylvania Railroad at Altoona, Pa.

The pits in the erecting shop are 570 feet long and are located on the three tracks. This arrangement is somewhat at variance with previous practice, which has located the pit on the middle track and at times on a portion of the side tracks. Steam, air, water and lighting service connections are provided in the pit, making it unnecessary to have

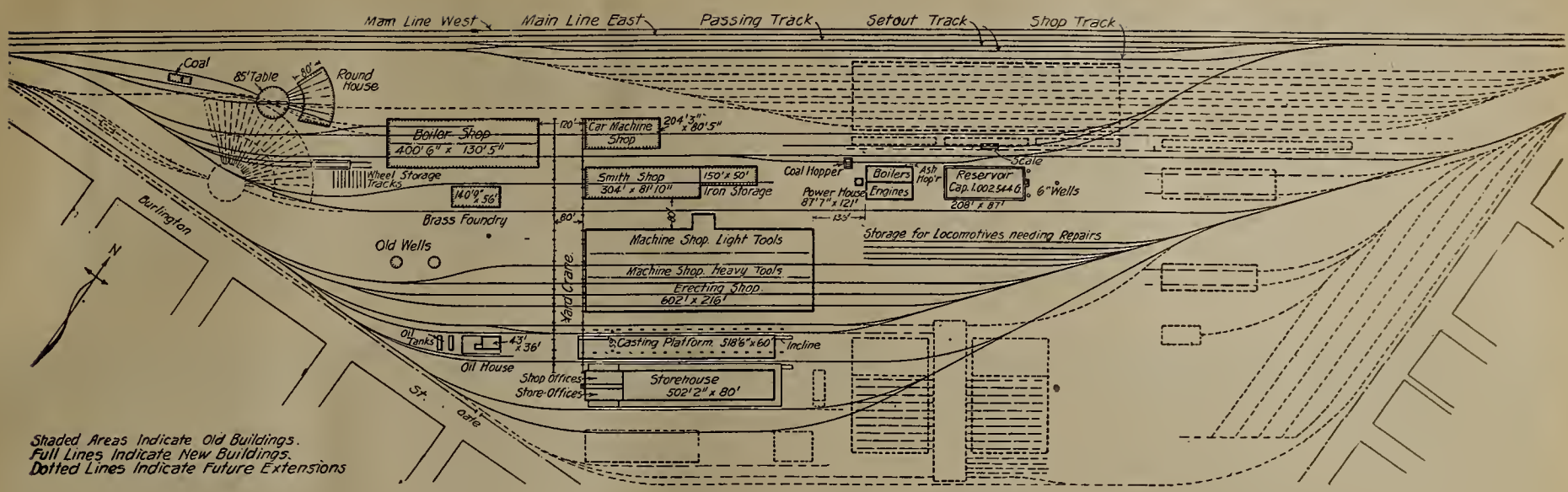

General Layout of Havelock Shops.

hose and lamp cords on the floor of the shop. The lighting of the shop, as well as that of others, is in the nature of general illumination, 110-volt alternating current, multiple enclosed arc lamps being used throughout, with the exception of the smith shop, where flaming arc lamps appear to be more desirable on account of the smoke.

The middle or heavy machine bay is equipped with a 3-motor girder crane having a capacity of ten tons and a span of 58 feet. As soon as shop requirements indicate same is needed, another crane of similar capacity will be installed on the same runway. All of the cranes in the shop, as well as those over the casting platform and runways, were built by the Niles-Bement-Pond Co. Direct current at 220 volts is used for operation of all cranes in the shops. Situated at the north side of the small machine bay at the center of the building is a projection 60 feet long by 40 feet wide containing the toilets, lavatories, lockers and fans for heating the building. Located at different places in the shop are five combination urinals and drinking water fountains built of slate.

Storehouse.

This building which is intended to be the main distributing center for material used on the Western grand division is of slow burning mill construction, with brick walls, and is one of the largest railroad store buildings in the country, being 500 feet long by 80 feet wide and three stories high. Surrounding the building on three sides is a platform 16 feet wide to facilitate the handling of material. One hundred feet of the first and second floors of the west end of the building is reserved for office use. On the first floor are situated the quarters of the superintendent of shops and the storekeeper. On the second floor are located the stationer, medical examiner with emergency hospital fully equipped, telephone exchange, space for apprentice school and meeting room. The offices are all finished in yellow pine, varnished and have plastered walls. On the first floor of the storehouse are located the cases for holding the material handled in largest quantities, and the receiving and shipping rooms. On the second floor are the stationer's stock room and material cases for handling small stock, while all material in original packages which is not worked over in the storehouse, or is of bulky nature, is stored on the third floor. The material cases are arranged in three rows and are perpendicular to the length of the building. An interesting fact regarding the design of the store building is that a form of material case was first adopted and the window spacing arranged to give a maximum of light between cases. The material cases are 5 feet wide at the bottom and are separated by space of the same width. This arrangement gives a case spacing of 10 feet center to center and 7 feet of window between two adjacent cases, the tops of which are three feet wide. The office portion of the building is heated by direct radiation, while the storeroom is warmed by an indirect system having duplicate fans, motor driven, which induce

Erecting and Machine Shop, Heavy Machine Bay, Havelock Shops.

the air through banks of American Radiator Co. "Vento" cast iron heating units using exhaust steam from the power house. Two motor driven elevators are installed in the building, one being located in the receiving room and the other in the shipping room. The building is lighted throughout by incandescent lamps, all wiring being in conduit.

Casting Platform.

Located adjacent to the erecting and machine shop and separated from the material platform along the north side of the storehouse by track clearance is a casting platform 518 feet long by 60 feet wide. Located over the platform is a crane runway with a 10-ton 59-foot span girder crane, which is arranged to serve the track along the north side of the platform and deliver material to a point underneath, and where it may be handled by the yard crane for distribution to all shops.

Oil House.

Situated west of the erecting shop and storehouse and at a distance of 220 feet from both buildings is the oil house. This structure, which is built entirely of concrete below the platform line, has side walls of brick and roof of concrete, water proofed with a five-ply pitch felt and gravel covering. Special attention has been given to making the building entirely fire proof and consequently no combustible material has been used in its construction. Tanks for storage of the various oils with the exception of kerosene and gasolene are located in the basement of the building and under the platform. Kerosene and gasolene are stored outside in two elevated tanks, each having a capacity of 20,000 gallons. These oils are handled to the storage tanks from cars by motor driven power pumps located in a separate compartment on the west side of the building. From the tanks kerosene and gasolene are distributed and barrels filled by gravity. For handling oils stored in the tanks located in the basement and used in considerable quantities, five Gilbert and Barker power pumps, each having a capacity of 40 gallons per minute, are provided. Ten Bowser self-measuring pumps are also located in the pump room for handling as many different kinds of oils in small quantities. The power pumps are driven from line shafting run by a 3 H.P. 440-volt Westinghouse A. C. motor.

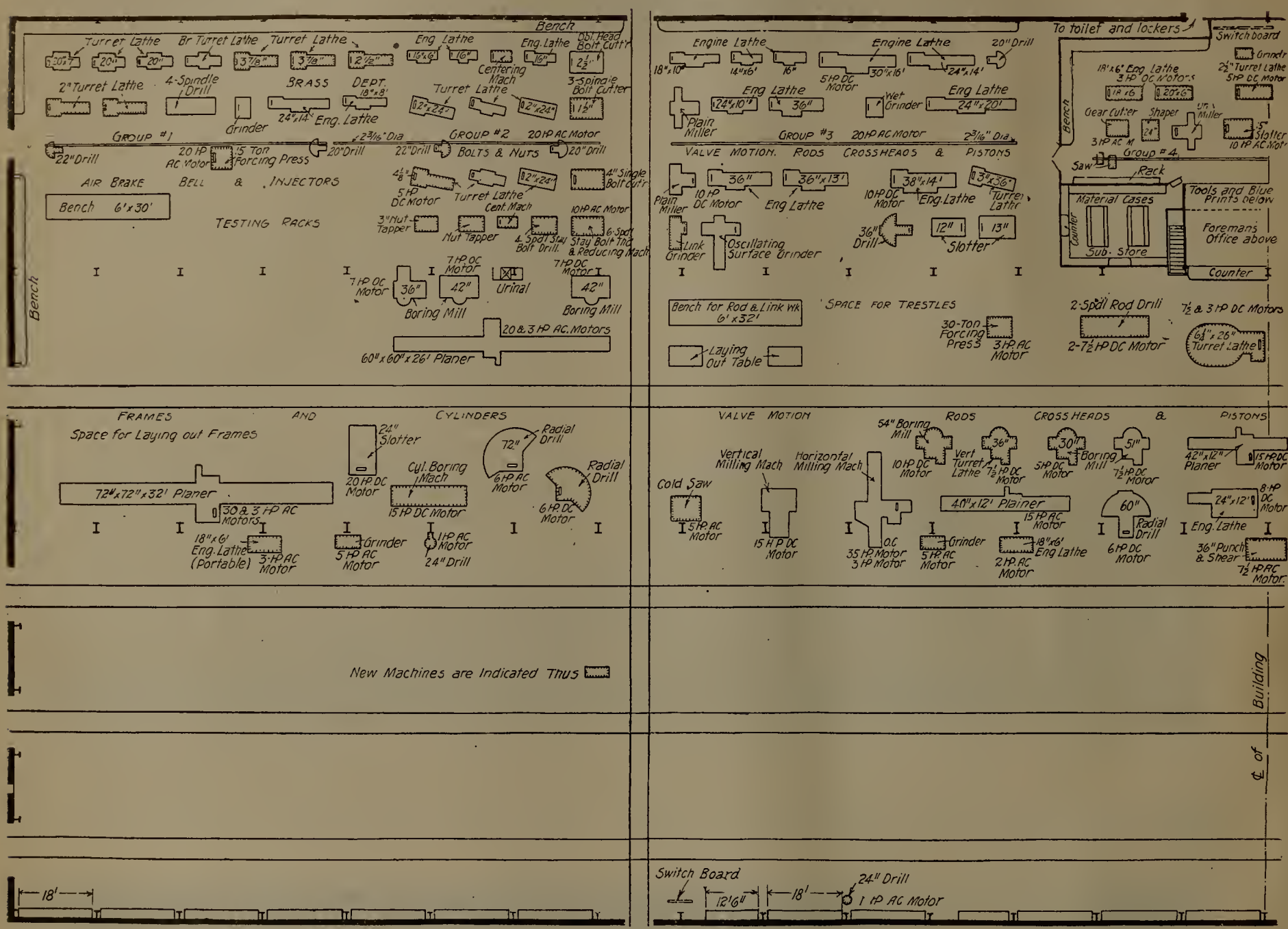

Machine Tool Layout, Machine

The tank capacities and the list of oils to be handled is as follows:

	Gallons
Kerosene	20,000
Gasolene	20,000
Fuel	24,000
Car	24,000
Valve	12,000
Signal	10,000
Mineral Seal	8,000
Black	500
Gas Engine	500
Renown Engine	500
Franklin Engine	500
Linseed	500

A compartment 18 feet by 36 feet is provided in the building for the storage of baled waste. For the easy handling of this material an overhead trolley arrangement has been installed.

Power House.

Forming the east building of the group is the power house, a building thoroughly modern in every respect. The structure is of brick with concrete roof water proofed with a five-ply felt, piteh and gravel covering. Special attention has been given to the eeonomical working of coal and ashes, the former being handled by incline belt conveyor from the usual depressed track hopper to concrete bunkers situated in front of and above the boilers. Ashes are elevated from the ash tunnel beneath the boilers to an overhead bin by means of a skip hoist operated by motor.

compound engine direct connected to a 200-kw. Westinghouse generator. Foundation and space is also provided for two additional turbines to serve the future requirements of the shops. One 100 and one 200-kw. Westinghouse induction motor generator sets furnish direct current at 220 volts for operation of adjustable speed motors on machine tools and all crane motors. Distribution of the current and control of the generating equipment is effected through a well designed 17-panel blue Vermont marble switchboard. A 25-kw., 125-volt Curtis Turbo-Generator and 25-kw., 125-volt Westinghouse motor generator set are provided for ex-

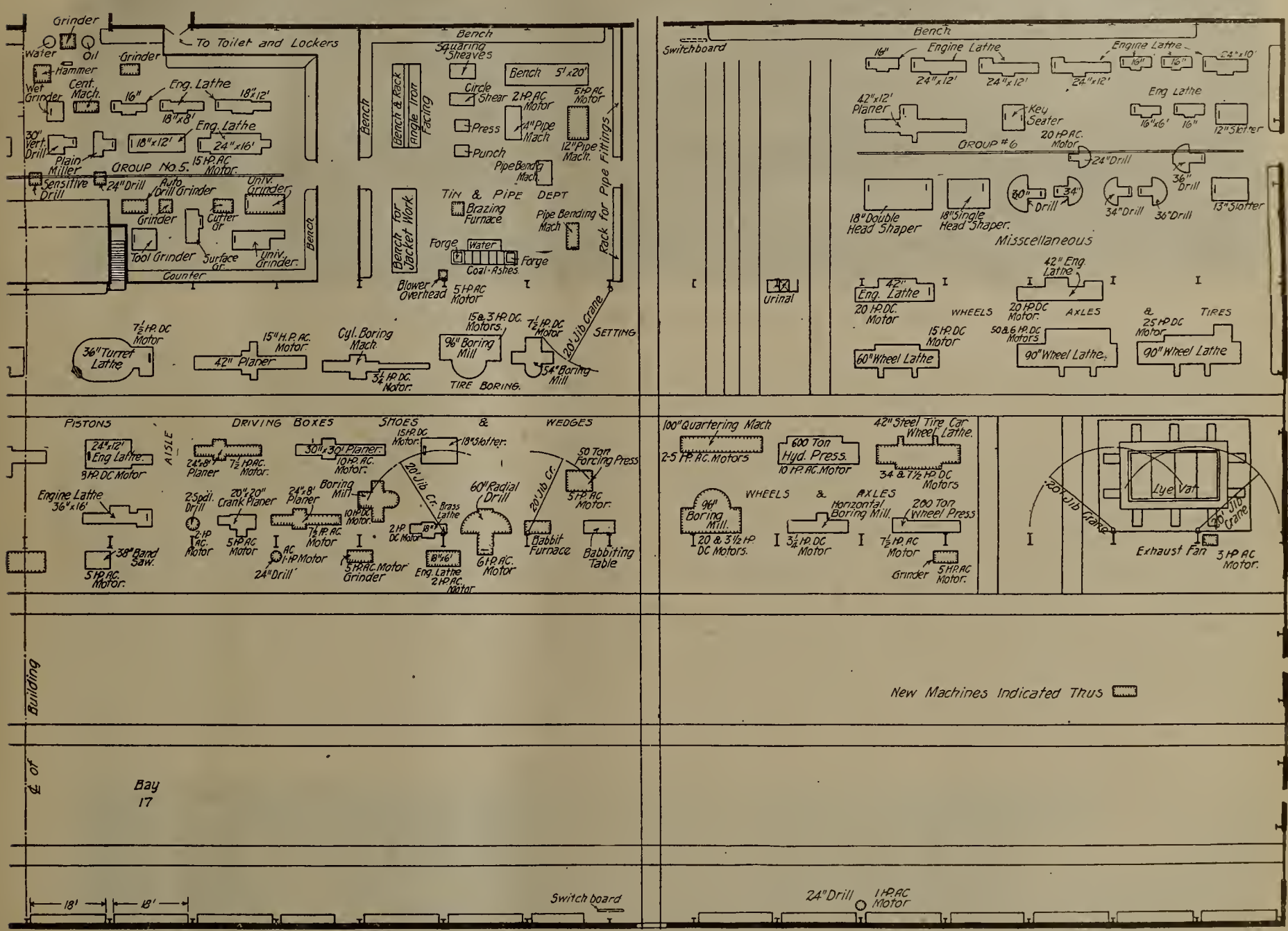

and Erecting Shop, Havelock Shops.

The steam generating equipment consists of four 400-H.P. Stirling boilers furnished by the Babcock & Wilcox Co., arranged in two batteries. Space is also provided for the installation of two additional 400-H.P. units. The boilers are equipped with the improved Green chain grate stokers and furnishes saturated steam at 150 lbs. pressure. Other boiler room equipment consists of two Blake pot valve 14 by 8 by 12 inches outside and packed plunger type duplex boiler feed pumps and a 3,000-H.P. Stillwell feed water heater located on a platform above the boiler feed pumps.

A tapered reinforced concrete chimney 200 feet high and 9 feet in diameter at the top, built by the General Concrete Construction Co., furnishes draft for the boilers. A Locke damper regulator is installed to control the drafts.

Three-phase, 60-cycle, alternating current at 440 volts is generated for lighting and the operation of all constant speed motors throughout the plant. The eurrent is supplied by one 750-kilovolt ampere Westinghouse Parsons turbine and a 300-h. p. 15 x 24 x 20-in. 200-r. p. m. Erie Ball cross

citing and auxiliary lighting purposes. An Ingersoll-Sargent cross compound two-stage 20x32x18¼x30¼x24-in. class G air eompressor having a eapacity of 2,100 eu. ft. of free air per minute and a Franklin duplex 20x20x16½x28x24-in. two-stage compressor of 2,000 cu. ft. capacity, which were part of the old power plant equipment, furnish air for use in the shops. Located in the basement of the engine room are two 16x14x18-in. Warren duplex service and fire pumps.

A 5¼x4¾x5-in. Blake duplex pump for furnishing drinking water to the various shop buildings and a Westinghouse-LeBlanc No. 4 motor-driven condenser for handling the steam from the 750-k.v.a. turbine are also located in the basement.

Adjacent to the power house is situated a large concrete reservoir, 206x85 ft., having a capacity of 1,000,000 gallons, and which contains the water supply for the shops. The reservoir is also used for cooling purposes, the discharge from the turbine condenser being sprayed through Koerting nozzles. Water is supplied to the reservoir into an auxiliary

Erecting and Machine Shop, Small Machine Bay, Havelock Shops.

reservoir from which the supply of drinking water is obtained and which is so constructed that the excess overflows into the main reservoir.

All piping between the power house and the various buildings is carried in concrete tunnels, the larger sections of which have the bottoms, sides and tops cast solid. Where the space required for piping is not large the tunnels are in the nature of conduits with removable concrete slab tops. The power transmission wiring is entirely overhead construction, being carried on steel towers and wood poles.

In adapting the old buildings to new conditions the old erecting and machine shop will become the boiler shop and the old boiler shop will be used as a blacksmith shop. Some wood working machinery will be installed in the old smith shop and the old power house will be used as a brass foundry.

The entire work of construction is under the direct supervision of Mr. F. H. Clark, general superintendent of motive power of the Burlington System, to whom we are indebted for the foregoing details.

All engineering work, including the design and construction of buildings, is being handled by the well-known engineers and contractors, Westinghouse, Church, Kerr & Co., working in conjunction with Mr. Thos. Roope, superintendent of motive power, lines west of the Missouri River, and Mr. Willard Doud, shop engineer of the Burlington System.

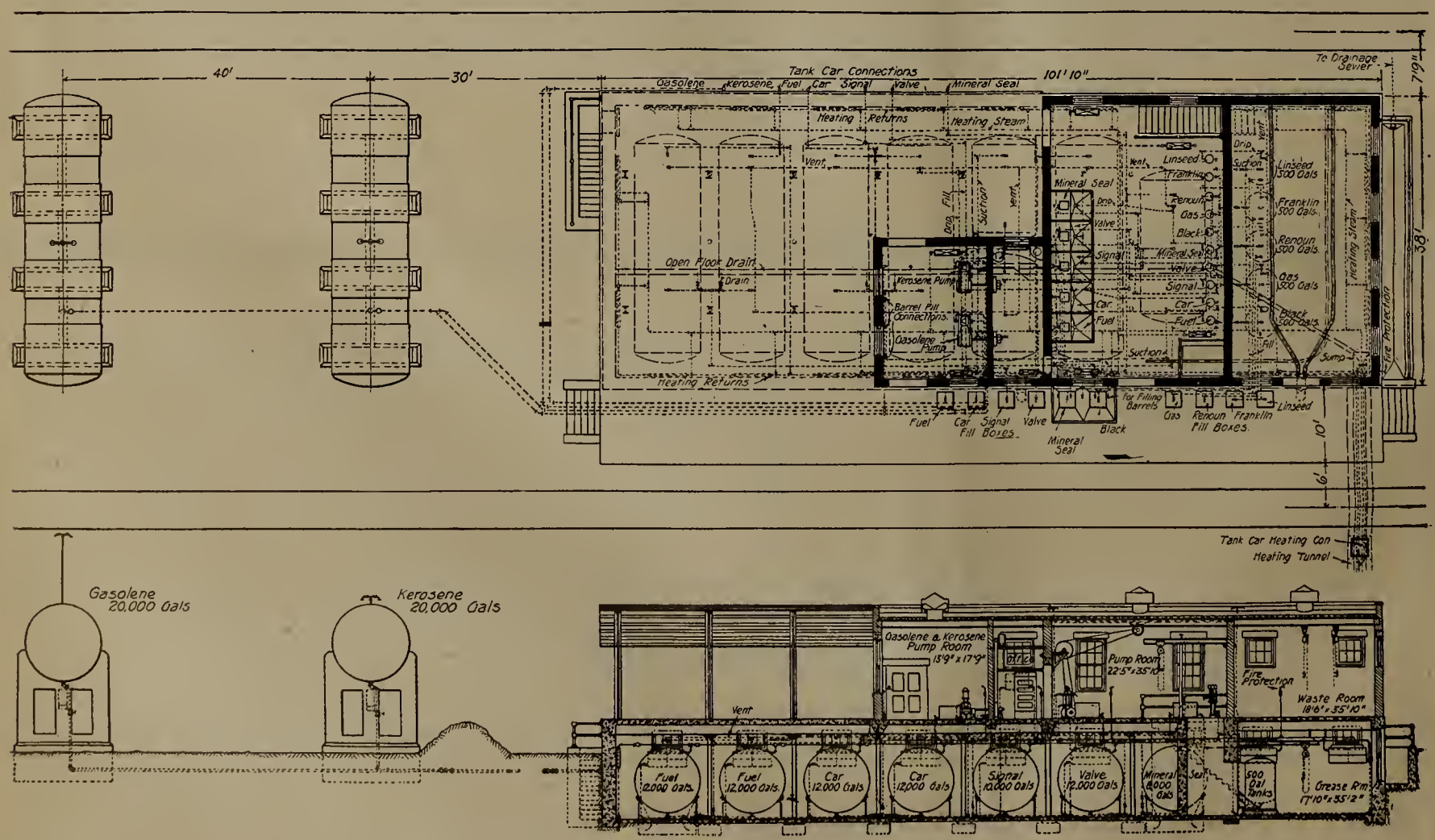

Plan and Section of Oil Storage House, Havelock Shops.

Storehouse, Havelock Shops.

FIRE PROTECTION FEATURE IN CONSTRUCTION OF THE PENNSYLVANIA STATION IN NEW YORK.

A firewall stretching across Manhattan Island from Ninth to Fifth Avenues has been completed by the construction of the Pennsylvania station and adjacent buildings. The full fire protection system of the station has just been put into operation and insurance engineers say a conflagration such as was experienced in Baltimore and San Francisco is now an impossibility in Manhattan. Some idea of the extent of the modern fire protection system in the Pennsylvania station may be had from the fact that the area covered is something over twenty-eight acres, with three levels below the main floor, the lowest being thirty-six feet below the street line. Approximately three miles of piping, weighing four hundred and twenty-five tons were required, while there are in all one hundred and seventeen hose connections, twenty-four roof hydrants and twelve flush hydrants.

A study of the fire protection arrangements of the new Pennsylvania station shows that this system received the same care and attention that has characterized the entire undertaking. While upon first consideration it may seem that the requirements for fire protection for a building of the type and character of the station do not call for any elaborate system, the nature of the business of a transportation company requires that more than ordinary precaution be taken to safeguard its operation against interruption.

It was necessary, in providing for fire protection at the new station, to secure a continuous and uninterrupted supply of water that would meet all the demands for domestic service and at the same time insure a surplus sufficient to maintain not less than twelve standard fire streams or 3,000 gallons per minute. With due regard for variation and uncertainties in the city supply, a careful study was made of the city's distribution system for the station district and it was found that by tapping the street mains in 7th and 9th Avenues, 20 ins. and 24 ins. respectively, and cross connecting the supply with a private 12-in. main in 31st Street between the two avenues, the possibility of serious failure would be reduced to a minimum, likewise there would be no appreciable effect on the station in

Erecting Shop, Showing Two 75-Ton Girder Cranes and Three Traveling Wall Cranes, Havelock Shops.

the event of heavy drafting by city fire steamers on one or the other of the two streets. In addition to the connection with the private 12-in. main in 31st Street there is a 6-in. connection with a 12-in. public main.

Connections from the above mains are carried directly to two 1,500-gallon "Blake" pumps of the Underwriter pattern in addition to the 16-in. suction from two storage tanks having a total capacity of 75,000 gallons. The pumps and tanks are installed in the station service plant, a separate building used for furnishing power for various purposes for the operation of the station, located on the south side of 31st Street between 7th and 8th Avenues. These pumps are cross-connected and can be operated singly or in battery. Ordinarily the pumps work under "Ford" regulators set to maintain constant pressure of 90 lbs. There is a 12-in. discharge union to the fire line distribution, provided with approved gate and check valves.

The fire system distribution is divided into two loops or sections, one section supplying sixteen 4-in. standpipes inside of the station building, the other consisting of a 10-in. "grid-ironed" loop system encircling the track level between 7th and 9th Avenues. West of 9th Avenue there is a 5-in. extension connecting back of a 10-in. cross main, with both sides of the main loop and running to 10th Avenue. There are also two 6-in. tie connections near 33rd Street and 8th Avenue between the 10-in. loop supplying the track level area and the 6-in. discharge to the standpipe system. The supply pipes throughout are carried in pipe subways which encircle the entire station area. The pipes are carried on transverse cast-iron hangers supported from steel girders, and together with the main shut-off valves are readily accessible for inspection or repairs. With the exception of a short section of the loop system which has been laid underground along the 34th Street side, all of the pipe is wrought steel with the interior risers of the standpipe system galvanized steel, the underground pipe being cast iron, hub and spigot pattern.

Six siamese hose connections have been located on the four street fronts of the station building to enable city fire engines to pump into the standpipe system. This service, however, would only be required in the event of failure of the fire pumps, as the latter would supply the maximum discharge necessary for interior protection and maintain 100 lbs. pressure. The pipe-runs from steamer connections are controlled inside of the building by independent gate valves, with an automatic check valve in each of the siamese inlets closing against the building supply.

In the station building there are in all sixteen 4-in. risers with 83 hose connections thereon directly connected with a 6-in. loop line in the pipe galleries. These connections are located about eighty feet apart and are provided with "Nelson" angle globe valves and equipped with 100 ft. of 2½-in. linen hose suspended from hose racks. A smooth tapering nozzle 18 ins. in length with 1-in. discharge is attached to the hose at each connection. The use of an angle globe valve for hose outlets on the standpipe system was determined upon because of the greater freedom from leakage of these valves as compared with the gate type and as the water pressure available would be more than sufficient to meet all the requirements for interior protection the additional friction loss in the angle globe valves would be more than offset by the advantages of a tight connection.

In the track level area there are 23 hose connections on train platforms and 12 hydrants in the yard west of the station building. These latter hydrants are of the flush type, as operating conditions in the yard precluded the use of the ordinary standard fire hydrant; these hydrants are covered by metal hydrant traps. The hose equipment for these hydrants will be stowed in convenient form for quick handling in various yard buildings as the space between the tracks is not sufficient to permit of placing the hose over the hydrants. For the hose connections on the platforms 100 ft. of 2½-in. linen hose is provided at each connection and for the roof hydrants 100 ft. of multiple woven cotton rubber lined hose which is stowed in two centrally located hose houses.

Hand chemical extinguishers have been provided in the corridors of the upper floors and at other points throughout the station, comprising in all 75 three-gallon extinguishers. In addition, there will be 33 extinguishers of the non-freezing type placed in column recesses on the track level floor, where freezing conditions may exist.

For the station building there will be in addition to the equipment specified a 500-ft. reel hose carriage and a 60-gallon chemical engine. The total equipment of 2½-in. fire hose for the station exceeds 15,000 ft. The fire protection for the station would be incomplete without some reference to the equipment provided for the station service plant. For this building there is a 4-in. loop supplying five 3-in. and one 4-in. risers having eleven 2½-in. hose connections for use on which 100 ft. of linen hose is provided suspended from approved hose racks. In all minor details the equipment is similar to that of the station building.

In order to protect against the exposure from adjacent buildings in the rear of the service plant, five monitor nozzles are installed on the roof, each having 1½-in. discharge. There is also a three-way roof hydrant for which 250 ft. of 2½-in. cotton rubber lined hose is provided, in addition to 23 hand chemical extinguishers.

A complete closed circuit fire alarm system covers the entire station and service plant. There are in all 20 boxes of the non-interfering successive type, wired in loops of 10 stations each, recording on three gongs, located under main concourse, yardmaster's office and station service plant. There are a number of "punch" registers and tap bells in the office of the various station officials. City fire alarm boxes are also located on the premises.

The fire brigade organization comprises twenty-five men, divided into three companies, viz.: Hose wagon company, chemical engine company and standpipe company. In addition, five men, who are expected to report at all fires in advance of the regular companies, are especially designated for hand fire extinguishers. Special provision is made for plumbers and electricians to report at all fires, being subject to the orders of the fire marshal, and certain of the elevator lifts are designated for transporting the apparatus when required on upper floors.

The standpipe service company is a distinctive feature of the fire brigade organization. The men of this company respond to all alarms and have exclusive control of the standpipe service and in handling the hose equipment in track level area for use on flush hydrants.

A unique feature of the alarm system for the station is found in the tunnel alarms for transmitting signals indicating fire and for cutting off current to the power rails. Their are 116 boxes on this system divided into six circuits, each box having two levers, one marked "Power" and the other "Fire," the "Power" lever automatically cutting off all power current in the section directly affected. This signal consists of two rounds of the box number. The "Fire" lever also automatically cuts off the power current and is indicated by four rounds of the box number. All alarms are recorded on a 6-in. gong in the main power house at Long Island City and on gongs in each of the sub-stations and station service plant. There are also a number of "punch" registers and tap bells in the signal cabins and train dispatcher's office. This system is not directly connected with the gongs or indicating apparatus of the station fire alarm system. The watchmen's service is recorded on two portable watchman's clocks from 38 stations and provides for hourly tours. At the present time there are two watchmen covering this service.

The fire protection system of the Pennsylvania station em-

bodies every modern contrivance for fire fighting. The system was installed after exhaustive inquiry as to the needs in Manhattan, and it is thought by insurance engineers to render impossible any fire of consequence in the station area.

PROTECTION OF METAL EQUIPMENT.

(Continued from Page 345, December, 1910.)

The answers to question No. 3 are apparently in favor of metal. In regard to general appearance, the writer's observation has been that the exterior of metal cars look better than wood, but he is under the impression that up to the present time more care and regularity has been taken in cleaning them. During the rush of business over Labor Day a number of metal cars were seen that had evidently missed their regular cleaning, and they certainly looked as dingy and unattractive as the wooden cars.

Several correspondents remarked on the appearance of a metal car because of rivets, laps, etc. The best the writer has seen are some of the more recent Pullman cars. The entire side, under the windows is pressed up or molded to resemble the wooden battens. The under row of rivets are not seen, being placed under the car and fastened to a rigid strip of angle iron; the upper row of rivets are so close up under the windows as scarcely to be noticed. But while this may be said of the exterior of Pullman cars, it must be admitted that the interior does not present the same elagance and taste that we have become accustomed to in the beautiful and artistic finish of the wooden cars.

Concerning remarks of (A) in regard to the opening of joints and entrance of moisture, it would seem that the remedy for stopping the spread of rust is better than any known remedy to prevent spread of moisture in a wooden car, when from any cause the varnish and paint have been bruised down to the wood, the sand blast can on a metal car reach it ordinarily. But as one master painter remarked on this subject:—"We already have the acetylene gas flame, which cuts part and welds metal without removing from the structure, does it speedily and without the usual hammering and sledging to injure surrounding parts, as in the old way. Other methods and devices will be forthcoming when necessity demands it to take care of the different operations in the most speedy and economical manner." And he concludes by saying "America for inventions."

Question No. 4.

Do metal cars clean at terminals as well as wood?

(A) "From all I can learn at the terminals, metal cars clean up a little harder than wood."

(B) "..... The inconvenience encountered with rivets is probably counterbalanced by the numerous beads, which have to receive attention on nine-tenths of the wooden cars met with today."

(C) "I find no great difference in cleaning metal cars at terminals as compared with wood."

(D) "Metal cars in our judgment clean at terminals as well as wood."

The answers to question No. 4 vary a little. It should be explained that terminal cleaning does not generally come under the supervision of the master painter, but the one in charge of that department should be one of his selection, or, at least, one who has a practical knowledge of what is injurious to varnish and paint. Much harm can be done, great expense involved, and blame be put on the varnish and general work of the paint department by the use of strong solutions (used to save elbow grease). Anything that is strong enough to remove dirt easily will in the nature of things be strong enough to remove a portion of the varnish film each time it is applied. Cleaning solutions of medium strength may be used when quickly applied and quickly rinsed off with clean cold water, but this requires both skill and expedition. A cleaner that is not soluble in water and cannot be rinsed off will embed itself in all interstices and gradually eat the varnish and paint away, and do it more thoroughly and quickly than surface exposure to rain and sunshine, heat and cold, or sulphuric acid gases encountered in tunnels.

Question No. 5.

On their return to the shop, do you find problems in touching up, repairing and revarnishing different from the wooden car?

(A) "The touching up, cutting-in and revarnishing the exterior is about the same with steel as with wood cars. With the interior parts there is a difference, as the natural wood must be scraped and refinished where it has been bruised, while the steel car can be forced up with putty and repainted."

(B) "There are problems presented by the steel car that do not exist on the wooden car. For instance, take the button or rivet heads. In every case it was found that the varnish and paint had been worn off, exposing the metal. This also applies to the edge of metal plates. In my opinion this was due to repeated terminal cleaning; a really unavoidable result of a necessary practice. In a number of cases these exposed parts had begun to rust. These hundreds of rivets must be freed of this rust and carefully repainted before the car is cut in. The flat surface of a car may be in such condition as to require only a coat of varnish, but the touching up of these innumerable rivets with a color so difficult to match as ..... would produce an effect at once objectionable, and cutting-in the entire car would be the only course to pursue. In other words, a steel car, on account of its construction, cannot receive the same treatment that is acocrded to a wooden car."

(C) "In touching up and revarnishing metal cars we find many joints to be corroded, which must be scraped and cleaned down to the bright metal, then primed and re-surfaced the same as new. Of course, we have none of this to do in touching up and revarnishing a wooden car."

(D) "Where care has been given at terminals, it (metal car) should come back each time with the surface in good state of preservation to permit of cleaning, recoloring or varnishing without cracks or fissures, which are so often found on a wooden car."

(E) "Aside from the possibility of the paint chipping off the edges of metal battens, I do not think there will be any difference in the problems of touching up, but I do think there will be considerable less repairing to be done to the average car."

(F) "On the return to shops, problems of touching up, repairing and revarnishing are entirely different. We advocate cutting sheets in preference to touching up. If a sheet is scarred it is better to clean the whole sheet with one of the paint solvents than to touch up, though the tendency on wood cars is to putty and touch up."

It will be noted that the replies to question No. 5 requires some experience and as many railroads have not yet adopted metal passenger cars, only a few could answer from actual experience, but the answers given are both opinion and experience.

Question No. 6.

Does your present experience or does your opinion, based on present experience, lead you to believe that there will be any greater trouble in future years in making repairs to metal cars by reason of side-swipes, collisions and wrecks? In other words, do you anticipate repairs will be harder to make?

(A) "It is conceded the metal car will withstand the greater impact in cases of wrecks, rakes or severe side-swipes. What would merely rake the painted surface material down to the metal, would most likely cut through the sheathing on the wooden car causing renewal, while the metal car could be remedied with far less expense. And where accidents occur to break in end or side, or, perhaps break the wooden car in two, would likely merely bend the metal so it could be repaired and get into service in shorter time. There are, however, instances where it would be out of the question to repair either class of cars, but would be much cheaper in the end to build entirely new than to attempt to cut apart, straighten out and re-assemble the metal cars, as here is where trouble arises in misfits, metal so heated and worked over is not the same nature or strength as in its original state, and as the metal is of some value as scrap there is this to be gained over the wooden car, which becomes nearly a total loss."

(B) "The corrosion in the joints in my opinion will eventually weaken the whole structure and cause extensive repairs to be made. If the car is side-swiped or wrecked the cost of repairs to metal cars would be much more expensive than a wooden one."

(C) "My opinion as to repairs in future years is that there will be less repairs as to side-swipes, for it will take a greater force to affect a steel plate than a wooden sheathing. As for wrecks and collisions, there would be less damage to the interior of a steel car than of wood. And a bad scratch could be plastered up quicker than one wood and would not have the tendency of crumbling as it sometimes happens on wood."

(D) "In my opinion there will be less trouble from side-swipes for ballast, for coal and light rakes will not affect the metal seriously, when the same cause would be sufficient to bring about the removal of wooden sheathing, panelling, etc. Moreover, when the steel cars are damaged seriously they will be harder to repair than wood. On the whole, think there will be less trouble with the steel because the surface, at least, will stand more than wood."

(E) "This question is one that a person might conjure up all sorts of trouble in store for them, but I have great faith in the ability of the designers of future equipment to overcome largely with modern appliances any serious trouble in handling repairs economically and reducing it to a minimum of cost."

(F) "I believe it will be much harder, therefore, much more expensive to repair metal cars than those of wood."

"No! The body side-swipe metal parts of the future steel cars will have to be straightened up or thrown away just the same as the parts of the wooden car are replaced, etc. Consequently, we cannot see why steel cars repairs may not be as readily made, also anticipated and provided for."

(H) "Metal cars would be more expensive to repair if badly stove in."

(I) "Repairs will be harder to make."

(J) "No! We have had several collisions and wrecks wherein metal and wood cars were concerned, and in most every instance, where the force of the collision was sufficient to make an indenture in the metal car the wood car was invariably a wreck or damaged to such an extent as to make repairs harder and more expensive."

This question takes a long look ahead. The concensus of opinion is that because a car is steel it will offer a greater resistance in accidents, and so reduce to the minimum the number of times it will require repairing. An accident that would put a wooden car out of commission would hardly make an impression on a steel one.

Question No. 7.

You know the average life of a wooden car; do you think the metal car will last as long?

(A) "I am fully convinced that the life of a metal car will be longer."

(B) "I think the metal car, if properly taken care of, will outwear the wooden car, but it is my opinion if the cars are allowed to deteriorate on account of non-shopping at necessary intervals, their appearance will show more markedly the neglect of proper care than the wooden car."

(C) "As to the life of a steel car. It is rather early to tell the exact length of time, but can safely say it will last one-third longer. A steel car well built and painted from the foundation up, should last from ten to twenty years. Practical experience teaches that paint is the life of a steel car."

(D) "In my opinion the steel car equally as well protected as the wooden car will outlast the latter."

(E) "Touching upon proposition seven. I am inclined to the opinion that if the parts of the steel car that are inaccessible after construction are given the treatment indispensable to their preservation before assembling, that the life of the steel car will exceed that of the wooden car."

(F) "In my opinion the life of a metal car will be less than a wooden one."

(G) "If the steel car structurally stands the continuous vibration, also probable rivet shearing motion that the fast traveling passenger car is subjected to, I cannot see why it should not last longer than the wooden car, which is also subject to open joints from the same cause, which in turn causes wood decay."

(H) "This is a question hard to decide. We have wooden cars on our line still in good condition, which have been in service thirty years."

(I) "Decidedly so."

(J) "We do not think the average life of the steel car will be as long as the wooden car."

Question No. 8.

From an economical standpoint, knowing as you do the cost of standard passenger cars and their maintenance, is it your opinion that although the cost of a steel car is greater in the beginning it will nevertheless compensate for the increase first cost by the longer service it will give?

(A) "Yes, I believe from an economical standpoint the steel passenger car will prove a saving over the wooden one."

(B) "Yes! If the present substantial make of steel passenger car is kept in proper general repairs at timely periods, not abused because it is made of steel, kept in the best paint and varnish repairs, also allowed to live out its service life without being subject to the usual architectural changes made in passenger equipment, we cannot see why the greater first cost of the steel car will be fully compensated for, as is claimed by the steel passenger car promoter and builder."

(C) "I do not think the increased cost of a steel passenger car will be compensated for by any longer service."

(D) "This all depends upon the design and construction. If the design is good and construction stable, the steel car, well protected, ought to be more economical in the long run."

(E) "It is my opinion that the first cost, while greater in the steel equipment, will compensate the owner by a more economical cost of maintenance provided they are kept up in good shape and given proper repairs when needed."

(F) "I can forsee the metal car of the future being built, and maintained, giving longer and more service per mile, and with less expense than the wooden car. And its longer life and service should make it the most economical, even though the first cost would be greater than the wooden car."

(G) "Most assuredly."

(H) "It is a question to the writer's mind if the increased cost of steel equipment will compensate for the increased

first cost by any longer service it will give, though when the element of safety it will give over the wooden car is considered, would say the increased cost is warranted."

Some of the answers received were of such a general character that it has been found impossible to incorporate them in the order of questions one to eight. The following seemed so comprehensive and in some respects so different from all the others, that it seemed best to quote it as a whole. It is along lines of originality and may bring out some important discussion. The article appeared in the RAILWAY MASTER MECHANIC about four years ago.

" * * * * I will endeavor to show the causes underlying the existing dissatisfaction based on long experience and many tests of various combinations of pigments and oils and to indicate how they can be successfully and practically removed.

"I will first deal with the subject of rust, as it is the one great evil the paint fraternity have to deal with, particularly so when we take into consideration the cost of structural iron work in large buildings and that of the iron and steel cars. Their maintenance depends largely upon checking rust. To intelligently solve this problem it is quite necessary to first look into the conditions iron and steel are subjected to, for instance, when painting structural iron work for buildings and that of the iron and steel cars, while the iron is practically the same, there are some few different conditions paint has to contend with. Paints must be made for their respective places. The former, dampness practically the year around and much greater during the breaking up of the winter, of walls sweating out badly.

"The iron and steel car having more or less moisture to contend with which is not enclosed, in other words, sandwiched in between damp walls and hidden from sunlight like that of the structural iron work moisture does not get the same chance to lay upon cars like that of the structural iron work. Again, when biulidngs are completed there is no possible chance of ever doing anything with it in the way of checking rust. The result is eating away, slowly but steadily the steel foundations. For protection of iron and steel structures subjected to above conditions, there is practically but one condition paint has to contend with and that is moisture; paint must be of a nature wholly antagonistic to moisture.

"The condition of the iron and steel cars in addition to be subjected to moisture paint must also be of a nature to offset intense heat and extreme cold which produces expansion and contraction. Again, these cars are loaded with hot mill slag and much more severe painted surface than either of above conditions, and while a few of the many paints on the market sold for the protection of iron and steel surfaces have produced only ordinary results, when applied upon the car subjected to artificial heat in addition to the other conditions to life is only of short duration and the manufacturer wonders at the result, particularly so, when he calls your attention to the elastic properties, when being dried out and to the sense of touch with some degree of pressure is very tough, elastic-like and firm. However, I dare say, had the manufacturer taken more seriously under consideration the elastic properties in the manipulation of a mixture for the latter he would have met better results, for an elastic property that will produce fair results in ordinary paint to offset heat and cold and the same mixture proved a failure upon the surface subjected to artificial heat brought about from hot mill slag.

"There is only one conclusion and that is, the elastic properties contained in paint was too sensitive to artificial heat.

"Paint to fulfill its many functions must have many certain and reliable qualities, but cannot be put upon the market and compete with the many conglomerations of various pigment and worthless oils now on the market and labeled some fancy name for the protection of iron surfaces, all of which have been found wanting, among them a few with an odor to deceive the consumer or purchasers of its true nature that would put a dog to flight.

"Referring back to the question of rust I have heard it said time and again among paint manufacturers, civil engineers and painters, who claim it is quite necessary not only to remove rust from the surface, but stoutly adhere to the idea that it is quite necessary that rust must be removed from the pores of the iron and steel as it is to remove same from the surface in order to aid paint in checking rust.

"With all due respect to their opinions, this, in my estimation, is the one great mistake of today in trying to check rust. Rust in pores of iron is what you want and where you want it, and if rust in pores of iron does not show itself the writer always brought it about with what he terms a liquid rust producer absolutely free from chemicals of any kind.

"Rust is hydrated oxide of iron, in other words, a powdered oxide and I might add a peroxide paint in dry form, it cannot be entirely banished as claimed by many writers on this subject. Then I suggest, why not use it in this condition upon iron and steel while in its infancy and in dry powdered paint form?

"After iron and steel have been cleaned of rust and scales this is usually effected by means of a sand-blast; there are other methods but none so clean, quick and economical. However, the real object of the writer advocating the use of the sand-blast in preference to other methods is not so much to remove rust from surface as it is to destroy enamel or smooth finish upon iron and steel surface, at the same time enlarging the mouth of pores of iron and steel enabling the paint to adhere firmer than upon a smooth surface. Another advantage gained by the use of the sand-blast, paint can be made more elastic for a surface of this description and adhere better than that of a smooth one ensuring greater durability.

"Right here is where you check rust and the only opportunity afforded during the process of painting iron and steel surfaces. As heretofore stated, the one mistake of today is trying to check rust with various pigments of all descriptions made up into different combinations and applied for the protection of iron and steel, let us see what the results are, particularly among the cheaper combinations. To start with, pores of iron and steel are full of air, is it natural to suppose that during the application of paint being spread over surface it has driven the air from the pores? Not at all. On the contrary, no matter how fine your paint has been ground or how thoroughly it may be whipped out and laid off with a light touch of the brush, it will bind and bridge over face of pores at the same time enclosing more or less moisture in pores and any ordinary vibration or expansion and contraction will break them and admit more moisture. What is the natural consequence? Is it not natural to suppose that Corrosion starts in almost immediatly in a mild form and as time advances increases in rapidity? Subsequent coats of paint upon priming coat does not or cannot in the least, aid any in checking rust, as many suppose. The more inferior the protective coats the speedier oxidation sets in and the quicker rust shows itself upon the surface. However, in the meantime rust is doing its deviltry upon iron and steel just the same as if subsequent coats of paint upon priming coat were not there, nothing practically speaking has been accomplished in the way of checking rust upon iron and steel, more than subsequent coats of paint upon primer has hidden the evil-existing from the start but in a short time shows itself upon the surface.

"Now the question would naturally arise as to what I would deem the best paint for iron and steel surfacer. Answer—a chemically pure peroxide for several reasons, a few I will mention later on.

"Oxide paints are as numerous as the hills, but 95% of them do not contain over 55% peroxide of iron; the balance is made up of siliceous matter and roasted earth, both of which have in their composition more or less sulphur and phosphorus, alike destructive to linseed oil and most susceptible to moisture. Many on this account are prejudiced against peroxide paints without having ascertained by chemical analysis whether they are chemically pure or not.

"A good paint as a preserver should have a good covering power and a pure peroxide cannot be questioned on that score, but siliceous matter and roasted earth do not possess any such covering power.

"Among the many paints used for the protection of iron and steel, I believe red lead is the most popular, more particularly on account of its drying qualities, it is more a subject of deception and adulteration than pure oxides. Red lead in its pure state has not the affinity of chemical attraction for linseed oil found in pure oxide. Great care must be exercised in mixing it with linseed oil and that only in small quantities at a time and during the application it must be kept thoroughly agitated, otherwise it will separate from the oil and precipitate to the bottom of the vessel. Graphite is slightly of a smaller nature and many combinations of asphaltum, coal tar and ordinary minerals, altogether, I have found no comparison to a natural product of practically a pure peroxide of iron, especially so where each coat of peroxide paint is made and designated for its individual place in the painting of iron and steel surfaces as is so used.

"After iron and steel have been cleaned as herein mentioned, I reproduce rust with what the writer terms a liquid rust producer, going over surface freely using sponge or paint brush giving particular attention to corners and rivets. Sponge off fairly dry and let stand one to two hours; at the expiration of this time, you will observe more or less rust in pores of iron in powdered form 'dry.'

"This condition of iron and steel is in excellent condition to hermetically seal the pores and check any further rust, and the only opportunity afforded during the process of painting iron and steel.

"A priming composition suitable for iron in this condition must be penetrating, elastic, adhesive, and neutral to iron and steel. The former qualifications immediately upon application reaches the depth of pores driving air to the surface, loosens the rust or powdered oxide in pores and utilizes it, showing the utmost affinity between rust and primer, practically sealing the pores and establishing a thorough foundation for subsequent coats of paint.

"The rust or powdered oxide in pores forming the indestructible pigment.

"A primer of this description must not be sandpapered for such proceedure would immediately open the mouth of pores and undo the object in view.

"Second coat should be of a similar nature to that of primer, more than it is the nature of paint having a slight deviation in elasticity, the pigment in same being of a chemically pure peroxide.

"Third coat should slightly resemble second coat except as to elasticity, when dried, and it should not contain a gloss but slightly higher than that of an egg shell. Now I do not wish to convey that this can be brought about by linseed oil in its natural state and produce the desired satisfaction.

"Both coats, second and third, should be ground fairly fine. This will cost a trifle more, but never mind the cost. The extra covering and preserving power derived from a paint of this kind will more than offset the cost of grinding, particularly the second coat, as it will enter the mouth of the pores and unite solidly with the priming composition, affording a more solid protection against moisture.

"The coarser the mechanism division of paint the less adhesive and tenacious, the larger the pores and the greater the absorbing qualities for moisture and the speedier oxidation sets in.

"First and second coats of paint should be made for their individual place in the painting of iron surfaces as already stated. What I refer to by each coat having its individual place in the painting of structural iron work and the iron and steel car, is this: It is absolutely essential that there should and must be some slight deviation in elasticity in order that each individual coat may adhere firmly to the other (building out), whereas, if each coat be of a like nature in elasticity they do not have that affinity for one another and will lay upon each other closely, as for instance, three or more sheets of paper would do under a pressure; but with the proper variation in elasticity harmony is created among the coats applied and form almost a perfect blend, having so thoroughly amalgamated that they may be compared to so many pieces of iron welded together so as to practically form by one coat of paint and yet yield readily to expansion and contraction. The results you will find is a coating upon iron and steel that is surprisingly durable.

"The method summed up briefly is as follows:

"First, study the conditions iron and steel are to be subjected to and make paint to meet the conditions, including bridges, old or new, steel water tanks and coaches.

"Second, sand-blast upon large bodies, object is not so much to remove ordinary rust from surface, as it is to remove enamel or smooth finish upon iron and steel. It also enlarges the mouth of the pores, both assisting paint to adhere firmer than upon a smooth surface. Another great advantage gained is, paint can be made more elastic ensuring greater durability.

"Third, product rust, either artificially or let nature take its course.

"Fourth, liquid primer must be of a penetrating and elastic nature capable of utilizing all powdered oxide in pores, the oxide forming the indestructible pigment.

"Fifth, a chemically pure peroxide, especially so, when following liquid primer its preference over red lead, graphite, asphaltum, cold tar and numerous other paints, is owing to its being of a natural product and neutral to iron and steel.

"Sixth, while the wearing properties in painter's material is linseed oil, it has its place in the manipulation of the different coats applied and when used out of place is a detriment.

"Seventh, a pigment entering into the composition is relatively equal in importance with that of oil.

"Eight, a priming composition holds the same relative position in painting as does the foundation to that of a building. If you must economize, do it on the subsequent coats, for you may have the job to do over and you will have something to work on and help to get you out of your predicament.

"Ninth, avoid heavy coats of paint. If the degree of durability depended upon the quantity of paint, liberality in its application would be commendable. Paint thrown on carelessly lays upon the metal in a thick, heavy mass and the atmosphere in a short time absorbs its life and it flakes and peels off.

"Tenth, an inferior paint, properly applied, causes usually less disastrous results than would a superior article improp-

erly manipulated and carelessly used. A man may be very proficient owing to constant practice in the application of paints and yet he may be quite unfamiliar with the ingredients entering into the composition to meet or offset certain conditions."

Naturally on so new and so great a subject, there must be some difference of opinion, both in regard to practice and result, but the preponderance of views point to the practicability of properly protecting metal equipment, and of maintaining it in the years to come. It would be gratifying if a chemist or a genius could discover some indestructible coating, so that with the coming of the metal car there might be immunity from rust and decay. But the cars were here and nothing presented itself better than the methods pursued in the preservation and beautifying of wood. The best that could be done was to observe the well-known natural laws, which make metal have a tendency to rust, and after carefully preparing the surface, proceed to apply the materials that experience has demonstrated to be best. Too much emphasis cannot be put upon the importance of thoroughly coating the concealed parts, so that moisture and the destructive elements of the air may be excluded. Whatever may be discovered, it is a fixed principle that it is the action of the air and moisture that causes rust and decay. The demolition of some of the earlier built metal and concrete buildings has demonstrated that where the iron was perfectly embedded in concrete or cement, no change had taken place.

As stated in the beginning, this is a composite paper and as such is much more comprehensive than any one person could make it, especially in view of the short time metal cars have been in use.

The writer, therefore, desires to extend his sincere thanks for valuable aid rendered by the following master painters:

Mr. H. M. Butts, N. Y. C. & H. R.
Mr. Chas. A. Cook, P. B. & W.
Mr. A. P. Dane, Boston & Maine.
Mr. W. H. Dutton, Lehigh Valley.
Mr. H. W. Forbes, Erie.
Mr. John Gearhart, Pennsylvania.
Mr. H. Heffelfinger, Pennsylvania.
Mr. H. Hengeveld, Atlantic Coast Line.
Mr. G. M. Hoefler, Brooks Locomotive Works.
Mr. W. H. Hogan, St. Louis Car Co.
Mr. J. H. Kahler, Erie.
Mr. R. J. Kelly, Long Island.
Mr. J. F. Lanfersiek, P. C. C. & St. L.
Mr. D. A. Little, Pennsylvania.
Mr. J. T. McCracken, Interborough Rapid Transit.
Mr. E. B. Miller, D. L. & W.
Mr. W. O. Quest, Pittsburgh & Lake Erie.
Mr. A. D. Seeley, American Car & Foundry Co.
Mr. John D. Wright, The Baltimore & Ohio.
Mr. George Warlick, C. R. I. & P.

Paint, putty and varnish,
Preventatives of tarnish.
Use them early, use them late,
For daily coach or coach of State.
Do not think because its metal
T'will always seem to be in fettle,
Let the fact be e'er projected.
That metal cars must be protected.
Metal cars though good and strong,
Unprotected, don't last long.
Go for every crack and crevice,
If you want the best of service,
Rub it in and brush it well,
Neglect of this is sure to tell.
In cleaning do not be afraid,
To use a cleaner proper made.
It may require some elbow grease,
Before the boss calls out to cease.
Be sure that everything you use,
Is such that no one can refuse
To use it on the best of work.
And plenty of it do not shirk.
Give time between each coat to try.
Good workmen know the reason why,
'Twill save you many cares and ills,
If every part the workman fills.
From poetry we've dropt to rhyme.
And now we close for want of time.

A PROTEST.

Editor of Railway Master Mechanic:

I wish to ask through the columns of the Railway Master Mechanic why it is that so many of the master mechanics pay so little attention to joint car inspectors, who are poorly paid and are shown no favors, but from whom as much is expected as from a car foreman or master mechanic. The inspectors at terminals receive good pay and do not have to bother their heads about repairing cars. They place a card on a car and in the shops it goes, while the interchange inspectors have to repair their own cars and know what to do with a car. When they ask for men to help them the M. M. says, "Get the section men." This may be a saving to the car department, but it is a big expense to the maintenance of way department. Where is anything gained by this method? The clerks and baggagemen at stations are given a two weeks' vacation with full pay, and they never have to work a minute overtime, while the joint inspector is called out of his bed at night regardless of weather conditions, and he receives less pay than the clerks. An inspector serves as an apprentice two or three years, and it is always a task to get relieved. Anybody fills the clerk's place or that of the baggageman. Why should not the railroads hire more inspectors along the line and make the car department a place where young men will seek to serve as an apprentice? You can see they will go to any other department to learn their trade, and whenever there is a chance for a promotion to car foreman or general car inspector or any other good position some clerk in the office with a pull gets the plum, and the interchange inspector stays at his old place as long as he lives. Moral: show the joint inspectors more favors and better pay, and see the results.

From a subscriber of Ry. M. M.

[Better get another job, brother.—Editor.]

Concerning the Buckhannon & Northern, it is stated that bids for grading will be asked for early in 1911, and contracts will probably be let about February 1, to build from the Pennsylvania-West Virginia state line, up the west side of the Monongahela river to Rivesville, Marion county, W. Va. The principal commodities to be carried by the line will be coal and coke. S. D. Brady, chief engineer, Morgantown.

The Porterville & Northeastern Ry. has awarded contracts for the construction of about 16 miles of road between Porterville and Springville, Tulare county, Cal., to the Utah Construction Co., 520 Phelan building, San Francisco, Cal. F. U. Nofziger is president of the road, and C. S. Freeland is chief engineer, both at Porterville, Cal.

Shop Kinks

AN ITEM GOOD ENOUGH TO PUBLISH IS GOOD ENOUGH TO PAY FOR

AIR HOIST AND CRANE.

By Theo. Rowe, General Foreman, Great Northern Ry.

Owing to the fact that we are continually changing the water in our batteries for our dynamo cars, the necessity of getting up some device to lift the boxes arose.

These battery boxes weigh about four or five hundred pounds when filled, and when it is considered that they must be lifted about three feet from the floor for this operation the difficulties will be realized. At different times men have been hurt while doing this, having a finger pinched or a hand crushed. Altogether, they are rather dangerous to handle, and flushing batteries at the best is a heavy job. In view of these things I had a crane and air hoist made and applied in the manner shown in the sketch.

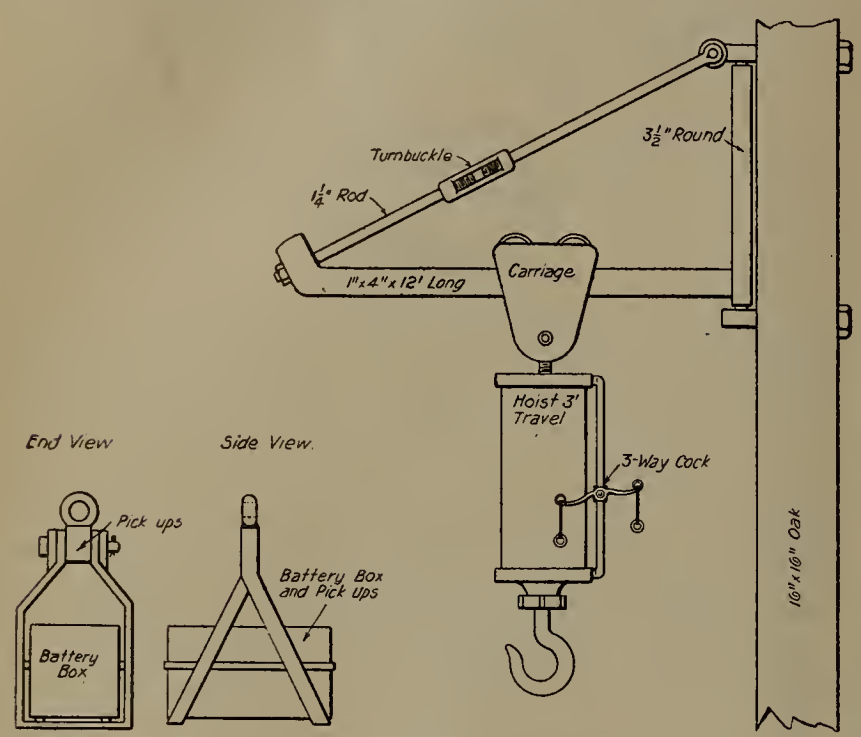

Air Hoist and Jib Crane.

This enables us to carry on this work without any one being hurt and is very convenient and safe. One man can lift up and clean a set of boxes in a very short time, where before it took three or four men, and at that the work was very heavy and laborious. This crane was built for this particular purpose, but it can be operated anywhere there is air pressure of 90 or 100 lbs. It has a capacity of about two tons and can be used to lift anything up to that capacity.

This crane is indispensable in this corner and it would be very distasteful to resort to the old method. In fact, one of these cranes is most convenient for lathe or planer work, being very easily operated and needing very little repair work to keep it in order. It is a very simple device to make. All that is needed is a top and bottom cylinder head, a hook with a piston head, a length of pipe, and a little blacksmith work.

SHOP KINKS AT COLLINWOOD, L. S. & M. S. RY.

The car journal brass department of the Lake Shore & Michigan Southern Ry. has been developed by means of a few home-made devices to the extent that it manufactures and relines all the brasses for the system. The space allotted to the machinery and furnace is very limited, but by means of the devices shown herewith the work is handled in a highly satisfactory manner.

After coming from the brass foundry the journal bearings are bored, four sets of two each at a time, in a 4-spindle Foote-Burt drill press. This machine is rigged with air clamps in such a way as to center and hold the brasses with

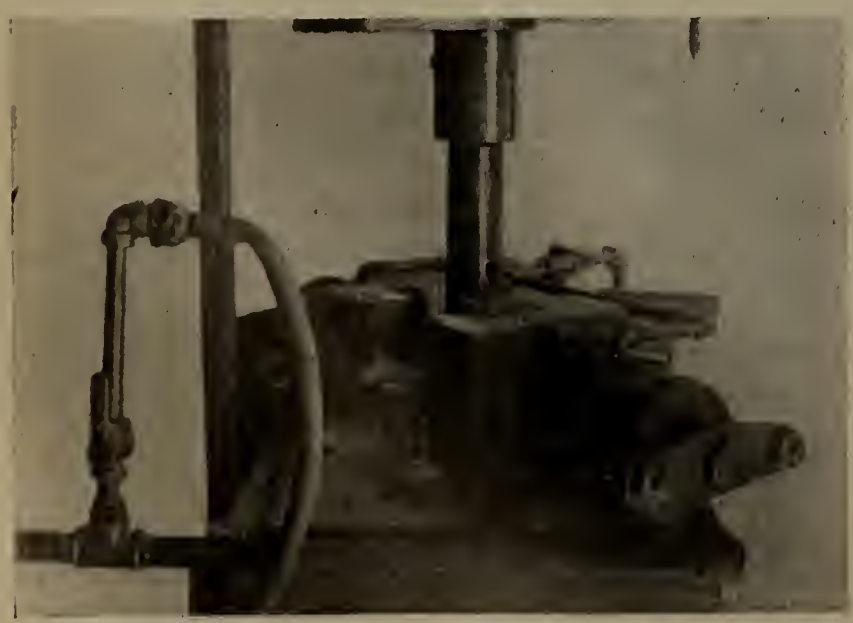

Fig. 1.—Air Clamp for Holding Brasses in Pairs for Boring.

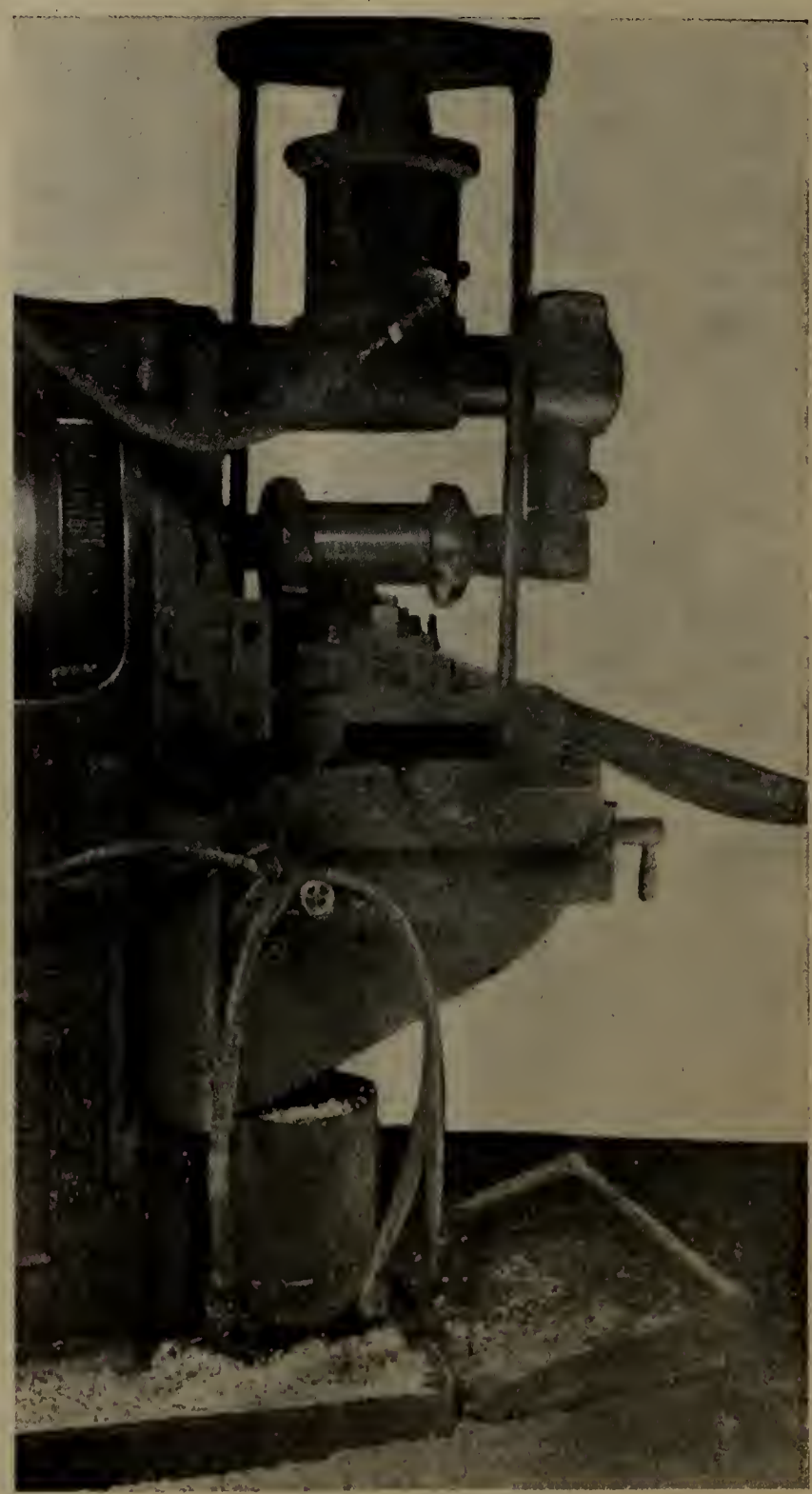

Fig. 2.—Arrangement of Milling Machine for Car Journal Brasses.

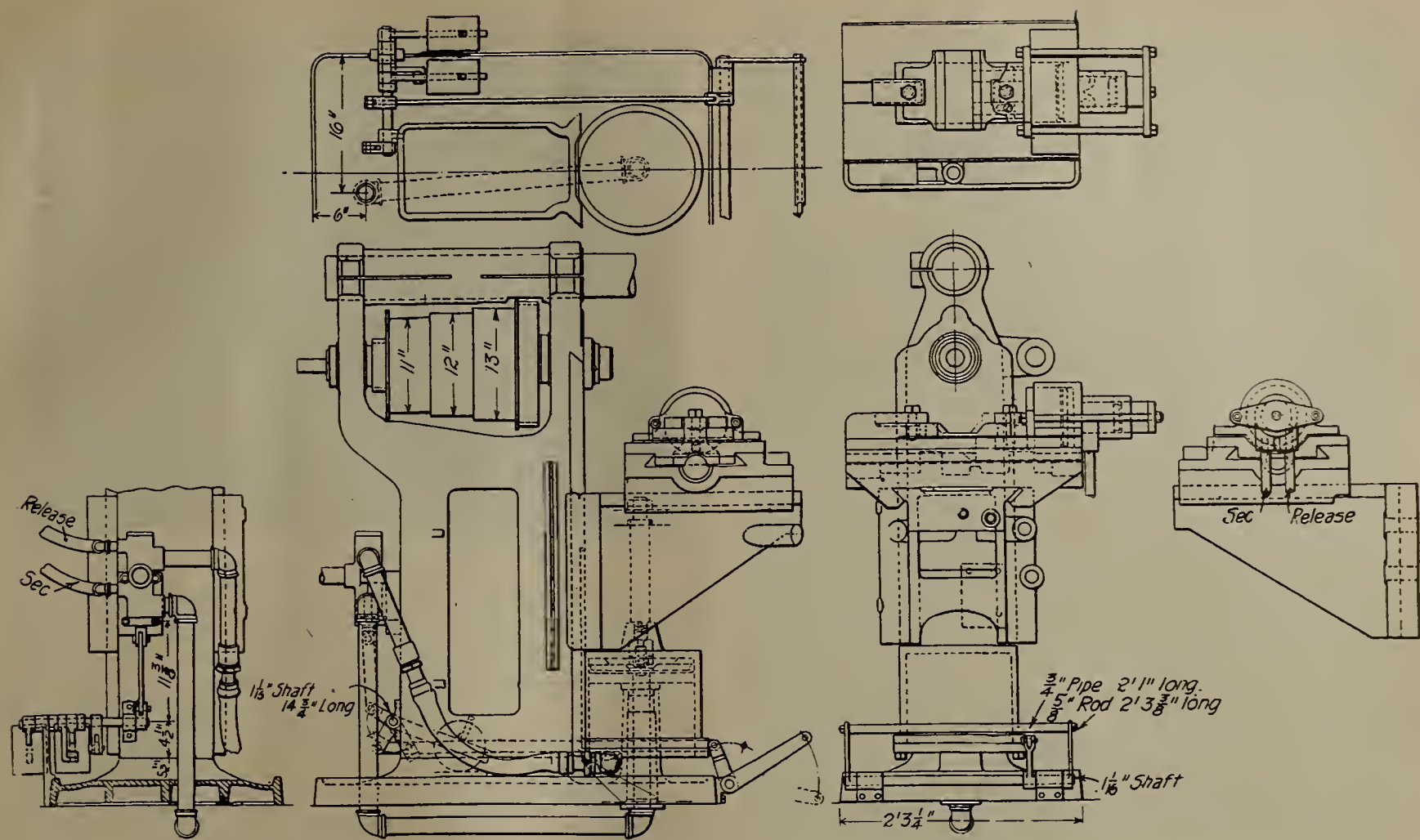

Fig. 3. Arrangement of Machine for Milling Journal Brasses.

one movement of a three way cock. This clamping device is shown in Figure 1.

After being bored the brasses are passed to a milling machine which fillets and faces the ends according to standard practice. This operation is performed in very quick time by the assistance of both an air clamp and a table lifting device which brings the table to exactly the proper height instantly. The arrangement of this machine is shown in Figures 2, 3 and 4. From the milling machine the brasses are taken to the babbitting fire where they are dumped into a tank of hot babbitt metal and left to tin. They are then taken in pairs as needed to a babbitting device which consists of a couple of air clamps illustrated in Figures 5 and 6.

This machine is made up of a 5-in. x 12-in. channel section supported by legs made of 2½-in. x 2-in. tee sections riveted back to back and embedded in concrete. Upon this table are

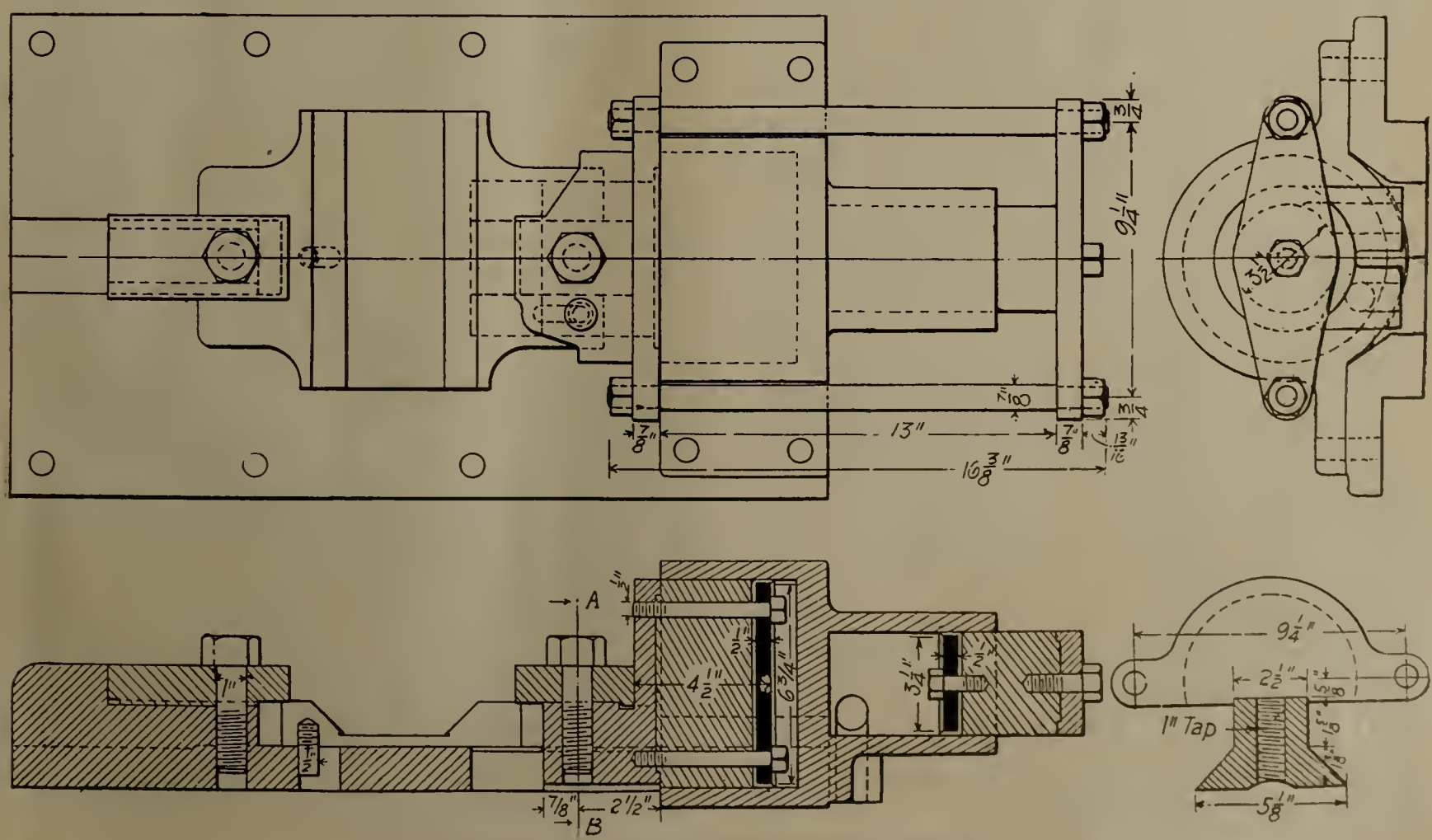

Fig. 4.—Air Clamp for Holding Brasses for Milling.

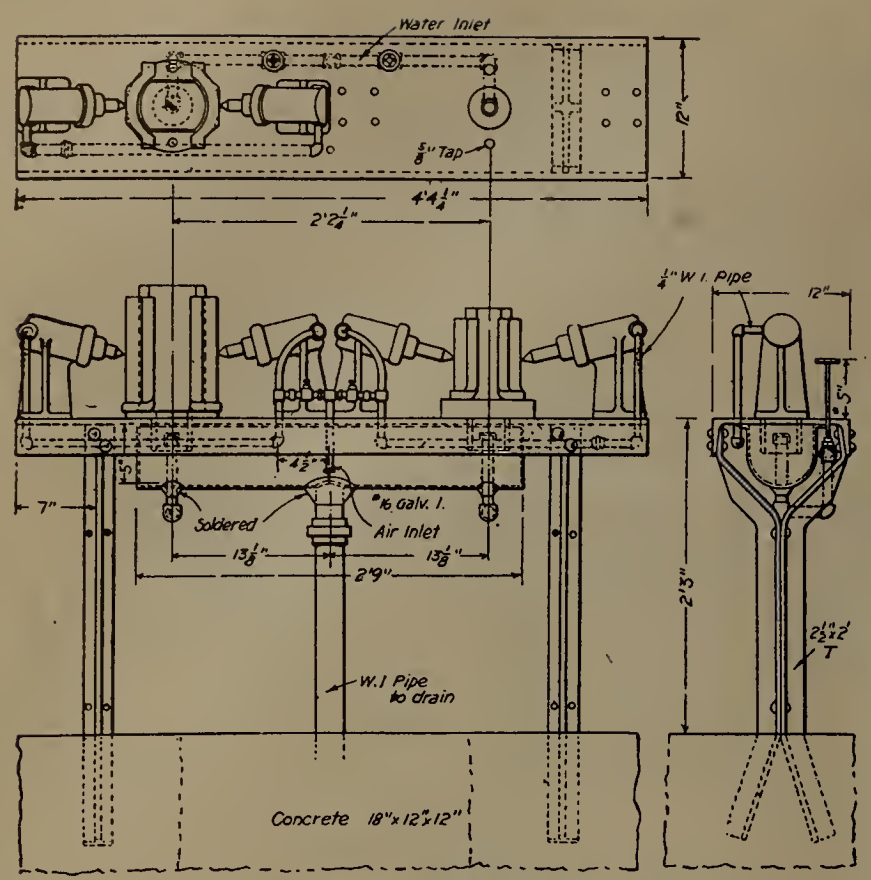

Fig. 5.—Journal Brass Babbitting Machine.

mounted cast-iron forms, which correspond to the sizes of journals for which the brasses are being babbitted and are interchangeable. These forms are cored out so that they can be piped for water to increase the rate of cooling the babbitt metal. The brasses which have been tinned are clamped against the forms with pneumatic clamps and the metal poured.

A CONVENIENT FLUE CUTTER.

By W. H. Snyder.

The accompanying illustrations show a device for cutting out flues from a locomotive boiler. The tool holder is first inserted in the flue, the cutting tool is placed in the holder and the point is driven through the tube. The socket *A* is then attached to the tool holder at *A*, the 1⅛-inch steel rod with a square on one end to fit the spindle *Y*, and an eye

Fig. 6.—Device for Babbitting Journal Brasses.

on the other end which is welded into socket *A* at *B*. This rod drives the cutter to be inserted into any flue without changing the device. One revolution cuts off the flue.

The photographic reproduction shows the assembled device and the method of hanging it up with a block and fall. The two chains shown on the lower part of the device are very important. These are anchored to each frame to steady the device and to keep it from swinging around when cutting off a flue. The large gear wheel is mounted on the spindle *Y*, which drives the cutter, and the power of the motor is transmitted through the gears *V* and *W*. The ease with which this device can be adjusted from one flue to another is a feature that should recommend it to anyone.—Power and the Engineer.

MACHINING CYLINDER RADII.

By M. H. Westbrook.

Figure 1 shows a convenient method for machining the radii of locomotive cylinder saddles. By the use of this method in connection with a draw cut shaper a man can machine to a given line in a few hours, a task on which I have seen a man spend a week of chipping.

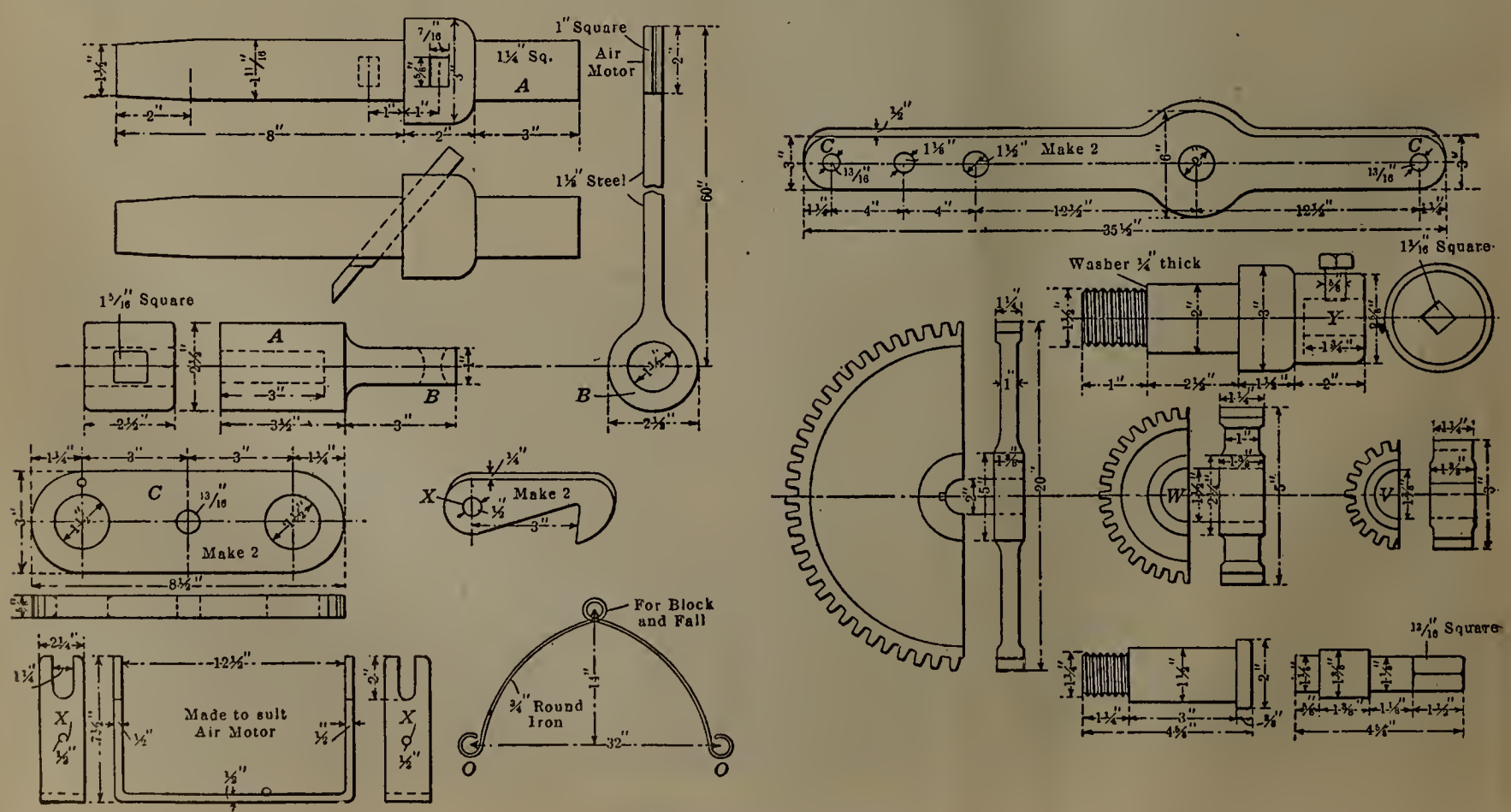

Details of Flue Cutter.

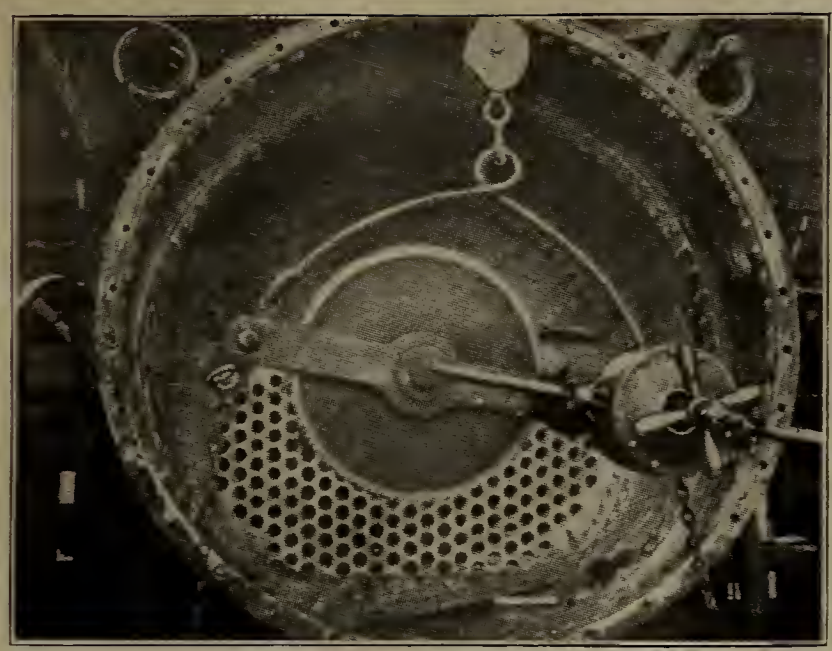

Convenient Flue Cutter.

Very few shops possess a planer wide enough to take two cylinders at a time because such a planer cannot profitably be kept in use on other operations owing to its size and weight of moving parts. The shaper shown can be used in small operations with efficiency, when large work is not to be obtained.

REDUCING COUNTERBALANCE WEIGHTS.

By M. H. Westbrook.

Figure 2 illustrates a method of reducing counterbalance weights by means of the same draw cut shaper. Owing to alterations in the reciprocating parts of the locomotive it was necessary to reduce the weight of the counterbalance. This was done by means of the method so plainly shown. The crank pin would of course have prevented the use of a lathe for this purpose.

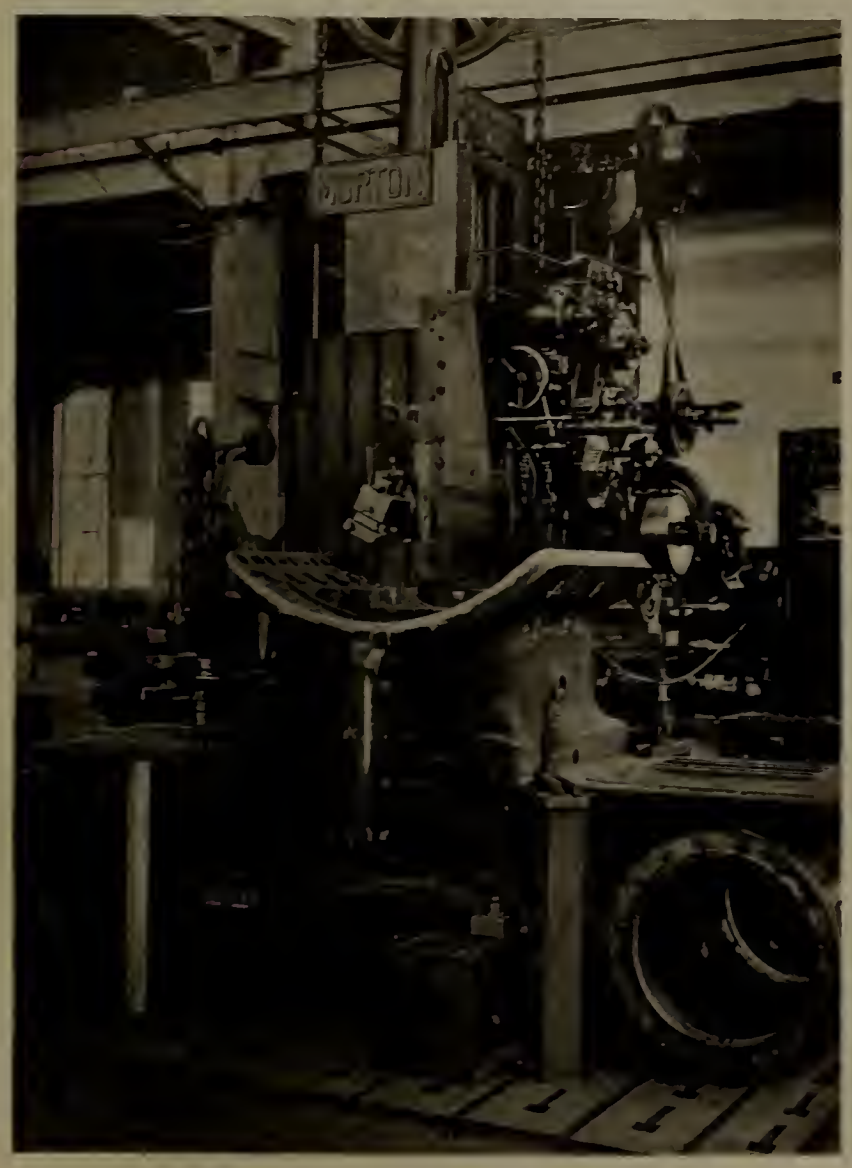

Fig. 1.—Planing Saddle Radii.

Fig. 2.—Reducing Counter-Balances.

FORM FOR MAKING PISTON ROD PACKING.

By Theo. Rowe, General Foreman, Great Northern Ry.

In the Great Northern, as well as many other roads, there is in general use what is known as the Emerson piston rod and valve stem packing. Strictly speaking, it is our standard piston rod and valve stem packing, and in the main shop of the Great Northern at Dale street, St. Paul, there are forms in which to pour this packing, after which it is bored out in a lathe to fit the rod. But in small shops or roundhouses, it is not possible to do this, owing to the fact that the men haven't always a lathe at their disposal.

The old method of pouring and applying this packing in the roundhouse was to place the packing cones as near as possible to their proper position, and wrap a piece of leather or heavy paper around them and cut a small hole in the top for pouring the metal. This method would be a very good one if the cones did not wear out of form and if the cones were always set perfectly square. However, to overcome this I had made four different sizes of forms, from three to four inches, for different diameters of rods, then had them cut in half as

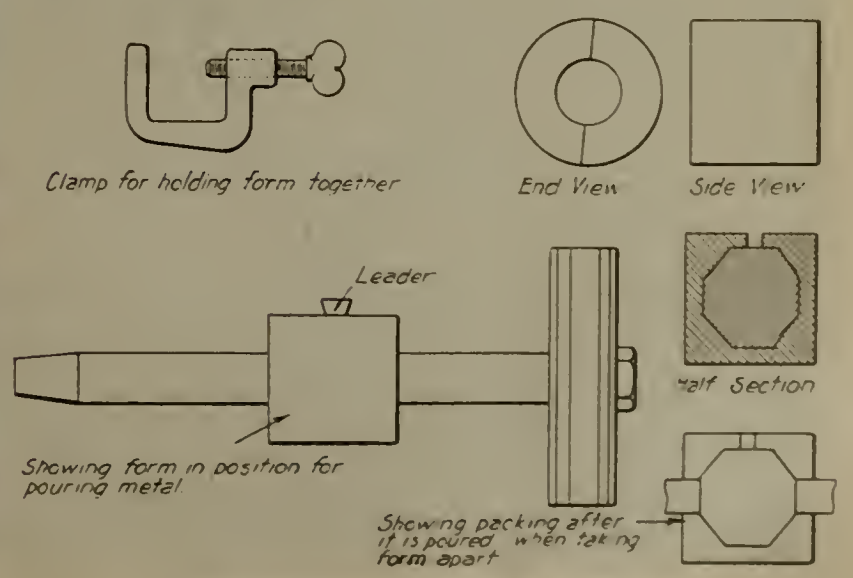

Form for Pouring Solid Piston Packing.

shown in the sketch, and made a clamp to hold them together, having a hole drilled in top for pouring. By this method all that is required to pour the packing is to take a form and clamp it onto the piston rod, there being no adjusting or any wrapping of leather. When clamped on everything is ready to pour the packing, and after it is poured it is uniform in size and just as good a fit as though it had been turned in a lathe. Further, the result is a solid packing, which is by far the best for a locomotive. These forms will, I believe, be in general use on different roads before a great while.

Blacksmith Shop of the D. L. & W. R. R., Scranton, Pa.

The Delaware, Lackawanna & Western R. R. has recently completed shops at Scranton, Pa. The blacksmith shop herewith illustrated is the most interesting of the buildings, in that its equipment is most complete.

This shop is 125 by 300 feet and a general view of one corner is shown. A three-rail track is shown at the left of this view. This is for the use of both standard gauge cars and narrow gauge industrial trucks. This track leads onto an elevator shown in the foreground, the stores being kept in a room below as is shown on the drawing of the general layout reproduced herewith from the American Machinist.

A large number of furnaces for every purpose are installed in the shop and are shown in the illustrations. The entire contract for the furnace equipment was given the Rockwell Furnace Co., New York City. The fuel is water gas generated in a plant of the Loomis-Pettibone system installed by the Power and Mining Machinery Co., New York City.

In the layout drawing is shown the location of all machinery and the kind used.

The bolt department occupies about one-sixth of the floor space. Besides the main car track which runs along one side of the bolt department, a shop-car track runs through it to the elevator, so the work can be lowered into the subway and from there conveyed to the various shops where it is used or to the storehouses.

On the opposite side of the elevator is located the spring department, with its machines and furnaces, and in the space shown in the lower right-hand corner is the heavy forging department, while in the upper right-hand corner is shown the miscellaneous forging department. This department occupies about one-quarter of the floor space and with the other machinery contains 18 open forge fires that are located in pairs with a hood over each pair to carry away the smoke, gases, etc.

Most of the space shown in the upper left-hand quarter of the drawing is utilized for frame forging, welding, etc. This contains two large steam hammers, each being served with four large forge fires, and besides this five small forge fires and the foreman's office. The two hammers are each served with two swinging-jib cranes that will take the work

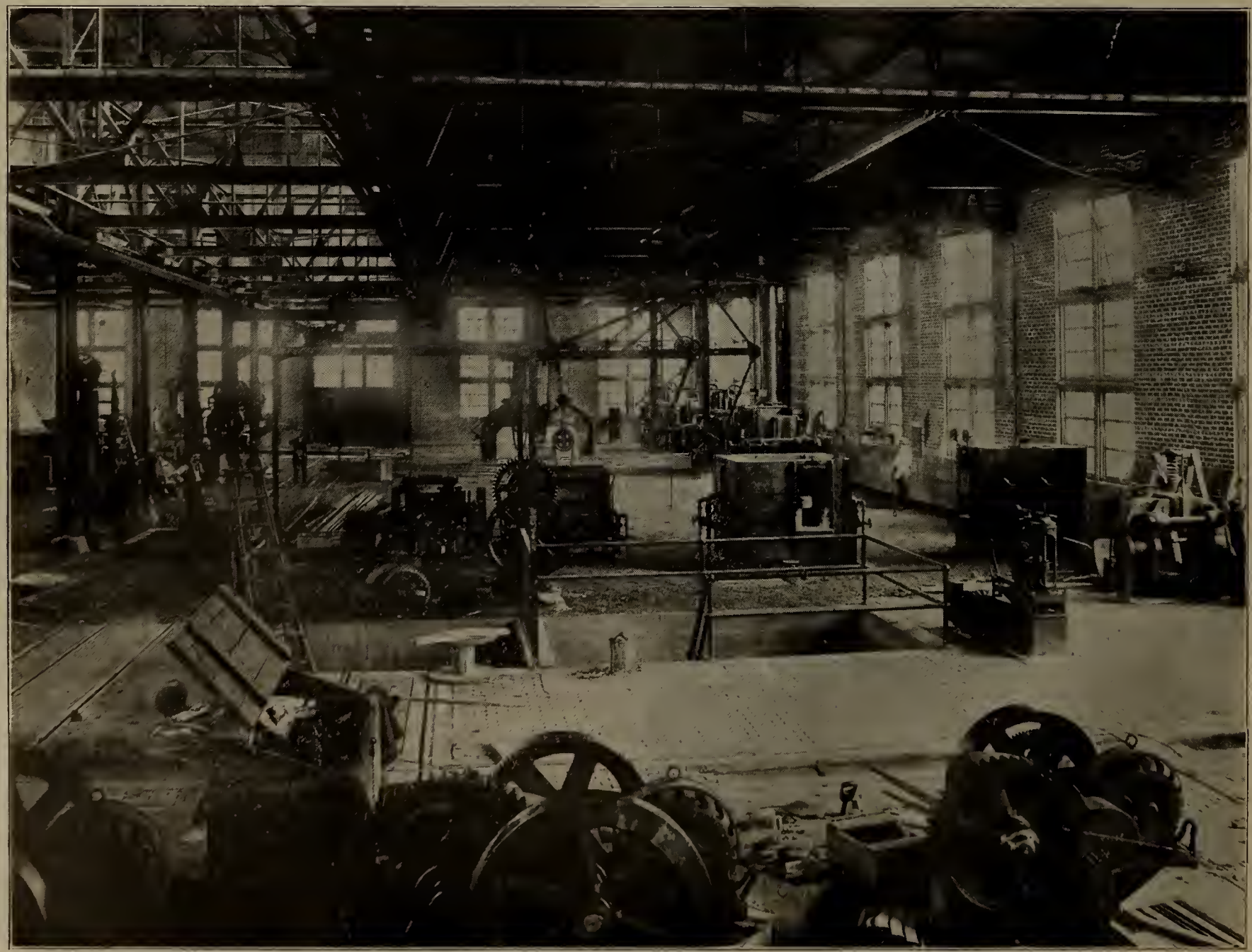

General View, Corner of Scranton Smith Shop.

Bolt Department With Heading Machines and Rockwell Furnaces, Scranton Blacksmith Shop.

from any of the four forge fires, back of each hammer, to the hammer or vice versa. The extreme corner of this end of the shop is used for tool hardening and dressing department.

One of the main features of this shop, as well as the other shops of this plant, is the subway railroad that is used for conveying the work from one shop to another or to the storehouses and shipping rooms. The dotted lines in the drawing show the location of the subway under the smith shop. The main line runs lengthwise of the shop, to the machine shop on one end and the yard on the other.

Under the center of the shop, as seen in the lower part of the drawing, are located rooms and bins for storing material. This covers considerable space and is reached by the elevator and stairway. Through the center of this storage room runs a branch subway that crosses the yards and enters the foundry. At the extreme left of the shop, underneath the bolt department, another branch of the subway runs through the yards and into the foundry.

With this system of handling work, the raw materials can be brought into the shop on the underground railroad and the manufactured materials can be taken out in the same way. Thus, the floor of the shop can be kept clear for the handling of work and not make it necessary to climb over freight cars, trucks, etc., in going from one side of the shop to the other. It greatly facilitates the handling of raw mate-

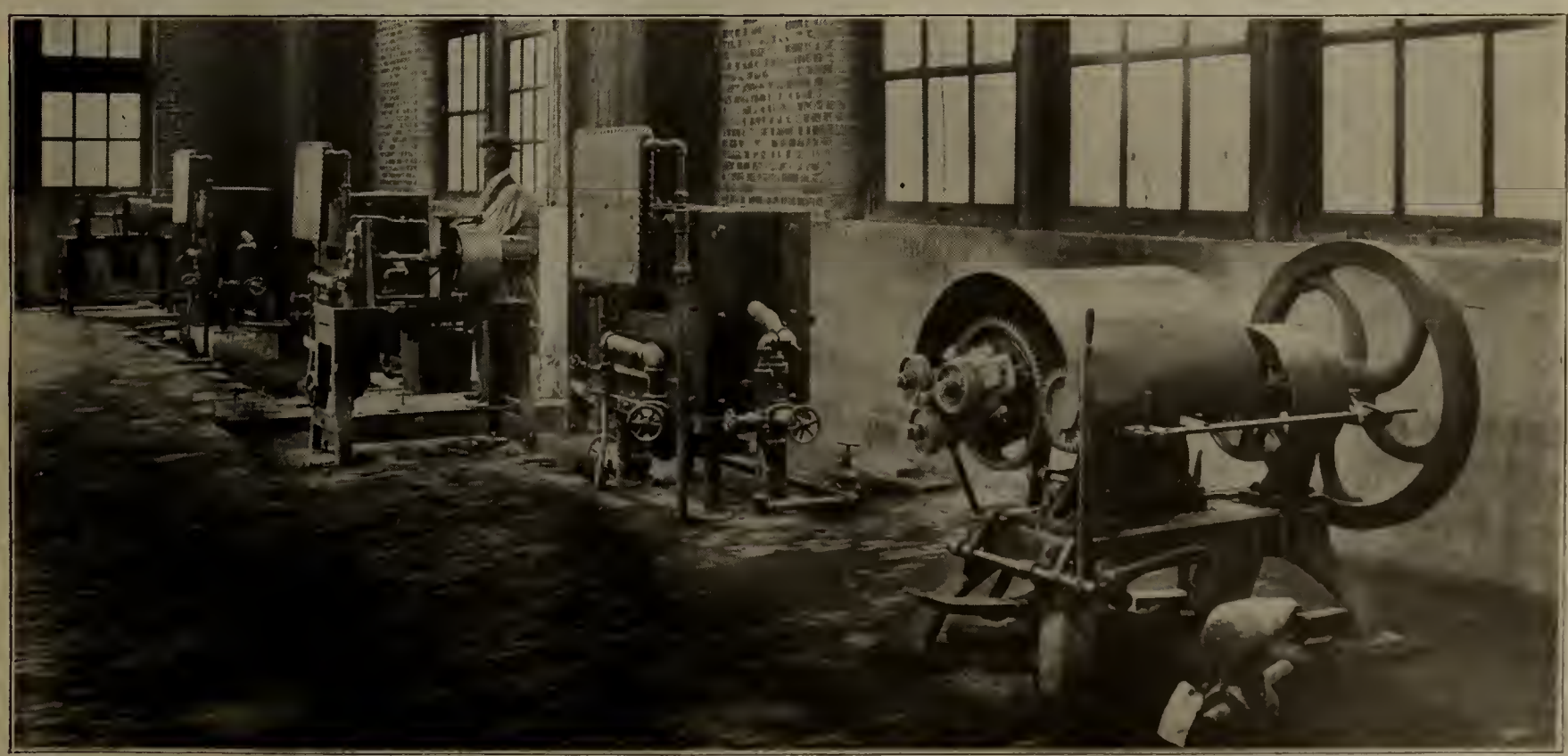

Tube Welding Machines, With Furnaces, Scranton Shops.

rials, as they can be brought into the yards on freight cars and dumped into the chutes that convey them to the proper rooms in the subway.

The bolt department with its forging machines and six furnaces has a capacity for heading 1,500 1½-inch bolts and 2,000 1¼-inch bolts, or 4,000 ¾-inch and 5,000 ½-inch bolts per 10-hour day. Each furnace has a large water-jacketed plate on both sides in front of the heating chamber to protect the operator. A pipe is so located underneath as to furnish an air blast upward which carries the heat with it back of the water-jacketed plate.

In one of the illustrations are shown two large furnaces in which work is heated for the two largest hammers; one of these hammers is shown, as well as the two cranes that carry the work from the furnaces to the hammers.

The furnace in the foreground is used in connection with a 2,500-pound hammer that is called the scrap hammer. It is capable of handling five heats per day and has a capacity for 3,600 pounds of steel per heat.

The furnace in the corner of the shop, in the rear, is used in connection with the 6,000-pound steam hammer shown, for heavy forging work. This furnace and hammer can handle steel up to 18 inches square, or shafts up to 12 inches in diameter.

The swinging-jib crane has been thought best suited for the work in this shop, and consequently adopted. Its construction and operation can be plainly seen in this picture. The same kind of crane is used in the frame forging and welding department in the diagonally opposite corner of the shop.

Across the car tracks from these big hammers, in the end of the shop, is located a drop-forging outfit. To the extreme left of the picture is partly shown the trimmer that works in conjunction with the 1,500-pound steam hammer shown next to it. The furnace and drop hammer are capable of working bars that are 5 inches square or under and then can handle these continuously all day.

In another illustration is shown the 800-pound drop-steam hammer with its trimmer and furnace. These are used on miscellaneous work, and the furnace also heats miscellaneous work for the 1,600-pound steam hammer.

The corner of the shop that is used for the tool department is shown in one of the photographs. In the extreme corner to the right of the picture is situated a large case-hardening furnace. Immediately in front of it a concrete vat has been built in the ground to be used for an oil tempering bath. Immediately over this vat will be located one of the jib cranes, of one-ton capacity, to handle the metal worked in the furnace and vat.

In the background, next to the case-hardening furnace, will be seen a barium chloride furnace, for high-speed steel, with a hood over it. In front of this is located an ordinary gas furnace for high-speed steel, and to the left of that is a furnace with three small openings, in which to insert cutting tools to heat them for hardening or tempering.

In the extreme left hand of the picture is shown a gas furnace with a water-jacketed shield. This is used for work forged in the Bradley hammer that is next to it but not shown. Immediately back of this are two open-fire forges, the end of one of which is shown, with a hood covering both of them.

The furnaces and machines for flue welding are located in the boiler shop. Each machine with its accompanying furnace has an average capacity of 80 welded tubes per hour.

The furnace equipment includes a large boiler plate annealing furnace which is open at both ends and is fitted with doors which are pneumatically opened.

As will be noted from the illustrations this shop is one of the most completely equipped railway blacksmith shops in the country. Its operation will be watched with interest. If results are in proportion it should operate with remarkable efficiency.

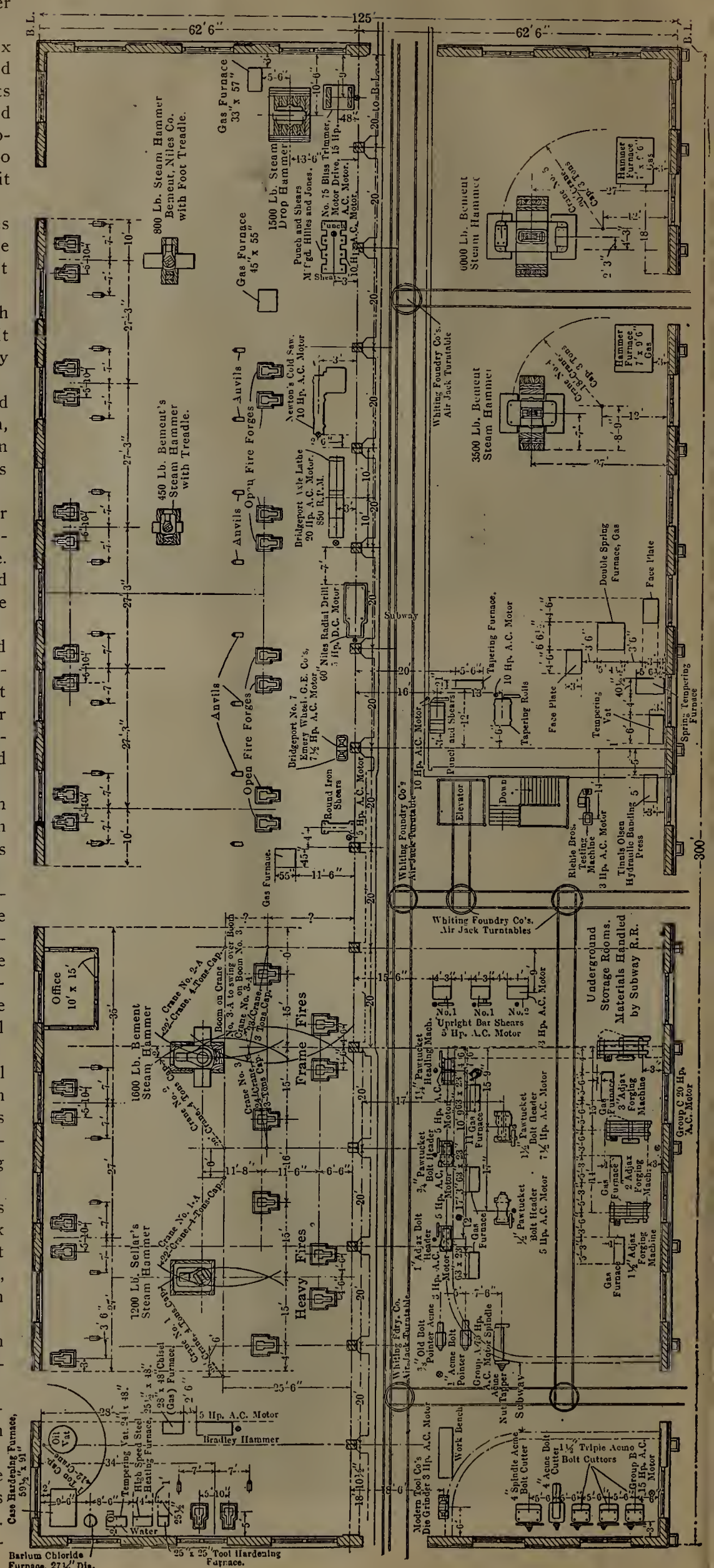

Rockwell Furnace and Jib Crane Serving a 6,000-lb. Hammer.

Hammer and Trimmer With Rockwell Furnace for Drop Forging, Scranton Shops.

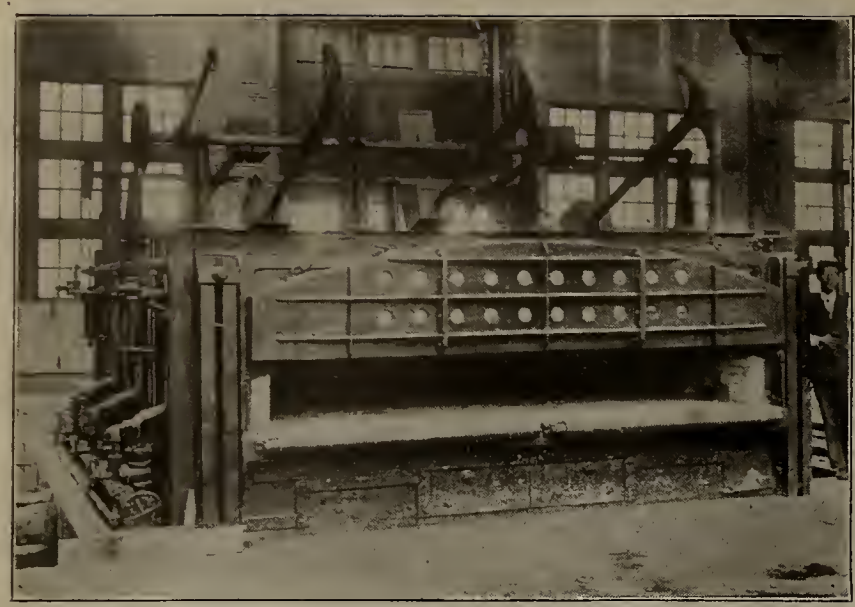

Boiler Plate Annealing Furnace.

Rockwell Furnaces for the Bolt Forging Machines, Scranton Shops.

NOTES ON THE PANAMA CANAL.

By J. Gibson McIlvain, Jr.

On October 21, 1910, my father, J. Gibson McIlvain, Frank P. Miller, of the Frank P. Miller Paper Co., East Downingtown, Pa., Fred R. Sayen, of the Mercer Rubber Co., Hamilton Square, N. J., and myself sailed on a trip to Panama and the Canal Zone, under the auspices of the American Institute of Mining Engineers. On Tuesday, November 1, we sailed into Colon Harbor, and as soon as our baggage was transferred to a special train we were taken across the isthmus to Ancon, and went to the Tivoli Hotel, which is large, spacious, airy and well run by our government. After spending the afternoon about the city of Panama, which is in the Canal Zone—but owned by the republic of Panama—we were ready for a week's work going over the canal.

The next morning we started at 8 o'clock through Culebra Cut by special train, stopping here and there as we wished, in order that we might see the work and try to grasp its magnitude, and to watch the many different kinds of machinery that were at work on this great undertaking.

Col. Geo. W. Goethals and Col. Hodges accompanied us on this, as well as our other trips, and the men in charge of the work at different points joined us. We talked with them and gained much information about the nature of the work and the cost of the same. The Culebra Cut was started by the French, and a considerable amount of dirt was removed by them. The deepest cut at Gold Hill is 534 ft., at Contractor's Hill 410 ft. The highest point on the center line is 312 ft. and then it tapers off on both sides to the Pedro Miguel lock on the Pacific and the Gatun Lake on the Atlantic side. It is about eight miles long, 300 ft. wide on the bottom, with a 45-ft. channel. The slides in the Culebra Cut will, I think, continue for some time, and to what extent no one can predict, but they are not as serious as they might sound to anyone who has not visited the canal. It is just a matter of removing the dirt which slides into the canal until it stops sliding.

When I left New York I was of the opinion that the sea-level canal would have been the most practicable, but after being on the ground and going over the plan of the canal, it did not take long to change this view; and on our way back, when we had an opportunity to consult each other,

Another Large Hammer Installation, Scranton Blacksmith Shop.

and our party comprised about one hundred men, most of them eminent engineers, and a number of business men, there was not a single man on the boat who was not fully in accord with the present plan of the canal, and who did not think that it will not only be quicker, cheaper and safer to build, but a great deal less expensive to maintain and operate.

The next day we visited the Pedro Miguel lock and the Milaflores locks and dam, the power houses and pumping stations there where this work is being carried on, and went to Balboa and took tug boats up to the canal, almost to the Milaflores locks, and saw the dredges, rock crushers and drills at work on this part of the canal.

The locks are built in pairs, so that they can be operated as we do a double-track railway. They have a usable width of 110 ft. and length of 1,000 ft. The gates will be operated by electricity. There will be twelve locks in all, six on each side, requiring forty-six gates, with ninety-two leaves, which will be steel structures, seven feet thick and sixty-five feet long, and from forty-seven to eighty-two feet high, weighing four hundred to seven hundred and fifty tons each, a total of about seven thousand tons of steel, the contract for which has already been let.

on each side with dirt dredged into the center, and when it is finished and covered with a tropical growth, it will look like a big hill.

The canal through this lake and the Culebra cut varies from 300 ft. to 1,000 ft. on the bottom, the most of it being from 700 ft. to 1,000 ft. wide. The distance from deep water to deep water is 50½ miles; from shore to shore 40½ miles. By putting in the Gatun dam, which forms the Gatun Lake, and raises the water to a height of 85 ft., we have constructed about twenty-two miles of the canal with practically no digging. The dirt from the Culebra cut is being used in the breakwater in the Pacific Ocean, which is built from near Balboa to the Island of Naosi, about three miles, and in the Gatun dam. Some of it, of course, is being wasted on their large dumps.

The plan and construction of the locks are admirable. The locks are being constructed of concrete, are large, can be operated rapidly and safely, and there will always be sufficient water in Gatun Lake to operate the locks. There would not be sufficient from the supply furnished by the Chagres River of itself, but with this immense volume of water to draw on there will always be plenty of water to operate the locks during the dry season. The stone for the concrete,

Tool Department With Case-Hardening and Annealing Furnaces, Scranton Shop.

The Chagres River, with headwaters in the mountains, through which the Culebra cut is made, flows into the Atlantic Ocean, at Fort Lorenzo, and the Gatun Dam is put across this river at Gatun. It is 9,040 ft. long, about one-third of a mile thick at the base, 300 ft. at the top and 115 ft. above the sea, and raises the water in the river to a level 85 ft. above the sea. This, of course, spreads the water of the Chagres River over a big territory, forming the Gatun Lake, with an area of 164 square miles. By damming up the Chagres River, which has been known to raise fifty feet in a day when there is a freshet, this river is practically turned into a lake, and consequently the silt which comes down the river at the present time will be deposited in the lake before it ever reaches the canal, and having such a tremendous area to spread over the raise in time of freshets will not be very great.

To a person not familiar with the building of dams it would seem like a risky proposition to undertake to put up a dam which would impound such a lake as the one described, but the immense proportions of this dam and its construction are such that I have no fear whatever that it will give any trouble. It is simply an immense pile of rock

for the locks on the Pacific side is gotten from the Ancon quarries, near Balboa. They have a large crushing plant there, and the stone is hauled over the railroad right to the works. The sand is supplied by the dredges. On the Atlantic side they have large quarries at Port Obala, and the stone and the broken rock and sand are taken in barges right to the Gatun locks, through the entrance to the canal.

The health conditions on the canal zone are admirable. The swamps are well drained, and they have small buckets placed on sticks, which drop a little oil now and then which kills the mosquitoes. The streets in Panama and Colon are well paved, and generally in good order. The houses and camps for the workmen, which are supplied by the government, are well constructed, open and airy, with wire screens all around. The commissaries are run by the government, without profit. The supplies are good and moderate priced.

There are about five thousand white people, mostly Americans, that work on the canal, who are paid on a gold basis. The labor is mostly Spanish and Jamaica negroes. They are paid on a silver basis, or with money, the value of which is about half that of gold.

I cannot say too much in favor of the organization of the

work, for which Col. Goethals and his fellow commissioners are responsible. Every gang of laborers has a good man in charge, who knows what is to be done and how to do it. The spirit of loyalty is fine. I did not see a gang of "bummers" on the Isthmus that were employed by the commission, and this was most gratifying. They are all working to get done, and not merely to draw their pay from Uncle Sam.

Col. Goethals himself is an able engineer, a good organizer and a hard worker. He spends a lot of time out on the work, knows just what is going on, and the work is being carried on at every possible point on the isthmus. Every man must do his share, every shovel must handle its share of the dirt, the works at the different locks must put in their allotted amount of concrete each month, and if they do not they must work overtime the next month. They know how much work must be done, and they are carrying it on to the best possible advantage, and arranging it so that it will all be done at the same time.

The Canal Zone is ten miles wide, five miles on each side of the canal. It covers about 448 square miles, about 322 miles of which are owned by our government. We paid the Republic of Panama ten millions of dollars in cash, and pay an annual rental of $250,000 for this strip of land, together with its rights and privileges. We paid the French Government forty millions of dollars for the work they had done, for the railroad and machinery, etc. Quite a lot of this machinery is not in use at the present time, as it is out of date, but a large portion of it is now being used. The old iron should be scrapped and shipped to the United States, to be used over again, but I understand that we could not do this, owing to some question regarding the tariff.

The work, according to the revised estimate of 1908, will cost in round numbers as follows:

Engineering and Construction		$297,766,000
Sanitation	$20,053,000	
Administration	7,382,000	
		27,435,000
French Canal Company		40,000,000
Republic of Panama		10,000,000
Total estimated cost of the Canal		$375,201,000

In addition to this we have spent $3,300,000 in the cities of Panama and Colon for paving, water works, sewers, sanitation, etc. This sum will be returned to the United States Treasury by water rents during the next fifty years.

The total amount of excavation required to complete the canal will be 212,445,766 cubic yards. Of this, the French excavation which was usable in the present plan, was 29,908,000 cubic yards; excavated by the Isthmian Canal Commission to October 1, 1910, 118,580,284 cubic yards; remaining to be excavated, 63,957,482 cubic yards. On account of the slides in the Culebra cut this may be increased, but not more than from 7,000,000 to 10,000,000 cubic yards. Our Government has excavated 3,889,320 cubic yards in a single month, and over 35,000,000 cubic yards in the year 1909. Therefore, the excavation should be completed, if we continue to excavate at the rate we have been, by October 1, 1912.

The Commission expects to have the canal ready to be formally opened to all commerce on January 1, 1915, but they will undoubtedly be able to put vessels through the canal during the early part of 1913.

The Panama Railroad, which is the nucleus of the work, is the busiest railroad I have ever seen. Everything on this road gives way to dirt. The equipment is first class for the work they have to do, and all in good repair. I hope that our government will continue to operate the railroad after the canal is completed, and that they will operate it at a profit. I am not very "strong" for government ownership, but I think this is one railroad which the government should keep.

A visit to the Panama Canal, seeing the locomotives, cars, diggers, dredges and all the equipment marked "U. S.," where the commissaries and camps are run by the government, and the railroad operated by the government, and where sanitary conditions could not be better, makes a man proud of his country. The work is so big and so well conducted, that I am proud of being an American.

The effect of the opening of this great avenue of commerce upon the shipping of the world is a subject too great for me to undertake, but Congress should, in my opinion, decide at an early date what the tolls shall be, so that commerce may know, at least two years in advance of its opening what they may expect, and be prepared to use the canal.

If individuals were building a great railroad they would be advertising for trade long before its completion; they would establish their rates so that industries could safely build on their line of road, and the rates should be established for the canal, in order that commerce may have an opportunity to adjust itself to its new conditions.

RE-WORKING OF OLD MATERIAL.*

By T. S. Sheafe, Engineer of Tests, Ill. Cent. R. R.

During the hearings on rail rates recently held by the Interstate Commerce Commission at Washington, a prominent lawyer said that the railroads of the United States are wasting a million dollars a day, and Mr. Harrington Emerson, whom many of you know, said that these wastes amount to three hundred million dollars a year. These are most serious charges, and were it not for the fact that freight rates per ton mile have been reduced from 12.2 mills in 1883 to 7.7 mills in 1906 (about the present average) or 37 per cent, while the cost of nearly everything else has increased in even greater proportion, we might believe that the men responsible for the management of our railroads have either been asleep at their posts or grossly inefficient. We all know that most railroad officials of every rank spend much of their time studying and trying out possible economies, and it is about a few of these that I will talk to you this evening.

Generally speaking, every large road has accomplished more or less along the line of working over material so as to increase its life. The Illinois Central R. R. became interested in this question from a survey of good material being loaded and sold as scrap. Many truss rods, being bent in wrecks, could not be straightened satisfactorily, although otherwise in perfect condition.

Early in 1907 the Chicago, Milwaukee & St. Paul Ry. hand round mill was copied, and a building erected for its accommodation, and from this small beginning the department has grown and prospered until the absolute net income has reached a point between $9,000 and $10,000 per month.

The original building, of wooden construction, was 45 ft. x 145 ft. x 14 ft. under the eaves, and afterwards increased by a 30-ft. addition at a total cost of $2,770. The rolling mill uses 80 ft. of the building's depth. The equipment is as follows:

(1) Hand round mill, two high, belt driven and resting upon timber cribbing. Value new, about $600.

(2) Engine, Chuse 10 in. x 11 in. high speed, double driving pulleys, resting upon cement foundation and a relic of the Stuyvesant docks fire at New Orleans. Value new, about $1,000.

*From a paper read before the Western Railway Club.

(3) Furnace, oil burning, 6 ft. by 6 ft., with two burners, two doors and a water "dutchman" in front. Value, about $400.

(4) Shears, alligator type, home made, used for cutting rods for billets. Value, about $200.

(5) Steam hammer, a very old one and only suitable for the rough work which it does, such as straightening good second-hand iron and cutting drawbar pockets from couplers, each of which operation is to be eliminated. A belt driven hammer, with cam, can be built at any shop at a cost of $100.

(6) The smaller items, such as the hot bed (made of scrap rail), the straightening table (of cast iron) and work bench and vise, together with leather belting and millwright labor, would not amount to over $300.

The total cost of such a mill complete is about $4,100.

There are employed in the mill:

Head man, or roller, at $95 per month; heater, at 31 cents per hour; catcher, at 27½ cents per hour.

The above are practical mill men, who live nearby and have been collected after many changes, they being satisfied with less wages on account of steady work, and they are excellent men.

A straightener at 23 cents per hour.

Laborers: The number of laborers is four, who handle second-hand material and do general work. The time is distributed daily. The time cutting billets and handling the finished product is charged against the account of new iron, the remainder being properly charged.

The labor charge amounts to about $1.75 per day.

The passes in the rails, if true half rounds, will deliver iron with diametrical fins. To overcome this the passes are first made true half round, in the lathe, with a turned thimble set slightly below the center, for clearance, and afterwards made to fit a template laid out as in Figure 5, in which the small circles have a diameter equal to the radius of the pass, and, with centers as shown, tangents drawn to the pass circle, and corners broken. This provides space for the iron to flow into, and when the bar is upended on the last pass, a true round is produced.

The top roll is made slightly larger in diameter to hold the iron down against the delivering table, which is fastened to the housings, thus leaving little straightening to be done.

Clearance is left between the rolls and the top roll is movable by the addition of set screws.

Materials used as billets are: truss rods, center pins, and heavy round iron, for rounds. Arch bars are used for flats.

The length of the round bars finished will average 7½ ft.; that of the flats, 6 ft. The excessive cost of rolling iron under ¾-in. diameter and the difficulty in holding it up prohibit the reduction under this size.

Iron rolled since January, 1908, in periods of six months, is as follows:

		Average per month
Jan. to June, 1908	273.42 tons	45.57 tons
July to Dec., 1908	282.87 tons	47.14 tons
Jan. to June, 1909	328.91 tons	54.81 tons
July to Dec., 1909	380.56 tons	63.43 tons
Jan. to June, 1910	376.88 tons	62.81 tons
July to Oct., 1910 (4 mo.)	249.17 tons	62.29 tons
Total	1891.82 tons	56.00 tons

The largest output (9½ hrs.) was Oct. 13, 1910, 10,630 lbs. The largest monthly output, October, 1910, 170,630 lbs. The present output could be greatly increased by having three high, improved housings.

There is every indication that this re-rolled iron is superior to the merchant bar iron, due to the further refining during rolling. It is used for bolts principally, as bolt header and cutter operators prefer it to new iron.

The net saving amounts to well over $12 per ton, everything counted except interest on money invested and steam consumption. There is no depreciation charge, as breakages and renewals are billed against the current month's output.

In this shop, also, good second-hand iron is straightened for use in the blacksmith shop. Bent ¾-in. iron is cut to length for brake shoe keys, without straightening.

The same is done in filling orders for drift bolts.

Good turnbuckles are cut from truss rods, heated in the furnace and cooled in water—the sudden cooling breaks up the rust in the threads, facilitating the removal of the stub ends.

Journal Bearings.

The re-lining of serviceable journal bearings is a common practice. As most roads do this, however, the saving is so large that it is worthy of some discussion.

Formerly all journal bearings removed from cars and locomotives were scrapped, but for the past six months they have been carefully sorted and all that are suitable have been re-lined and returned to service, thereby saving over $2,000 a month. There is some difference of opinion among car men about using re-lined bearings, but we are using them just the same as new ones.

This work is done in the room adjoining the mill, and next to the journal bearing work is the air and steam hose room.

Air Hose.

The only important saving effected here, which is perhaps novel to some roads, is the splicing together, by means of a special nipple and clamps, of two halves of good hose which have been chafed or cut.

A saving in this matter of 46 cents per hose is made and 150 hose per month are thus repaired.

The use of such hose is confined to locomotives, cabooses and company equipment which does not leave our line.

Paint Mill.

In every paint shop and in every paint gang there is an accumulation of paint skins and slops, quite useless as they are, but most valuable when worked over.

An iron tank, with a cover, and surrounded by an iron shell, the latter connected to the chimney by means of a movable hood, was built to take care of this waste material.

The boiling was done in an old shed, which is now used as a store room for raw materials.

The success in making a better freight car color than would be purchased, prompted the erection of a 15 by 30 by 12 ft. corrguated iron building, costing $250, where 5 barrels of skins per month are boiled with raw oil and shaded with red oxide of iron. The mixture in boiling is about: Skins, 350 lbs.; raw oil, 15 gals.; pigment, 100 lbs., up to shade.

The above makes one barrel of paint and the saving is over $22 per barrel.

The next step was the erection of the paint mill, a building 40 by 55 by 16 ft., of corrugated iron construction, costing $950. A 25-h. p. motor drives the mixing and grinding machinery, consisting of two large grinders and three small bench grinders, a machine for breaking up white lead, and a large mixer of home design and make, the latter doing away with all hand work. Value of equipment, $800.

During October, 1910, 6,450 gallons of paint were made, consisting of outside body color, freight car color and passenger car roof color. The saving effected during October, based on the prices paid for the manufactured article and the labor and ingredients used in making the paint on the above 6,450 gallons, amounted to $1,300. This is net and with all charges entered except that of depreciation and interest. Repairs are charged as a part of the running expense.

The force employed in the paint mill consists of a foreman, two paint mixers and three laborers.

Brake Beam Shop.

The straightening of bent brake beams of I-section has been generally discontinued throughout the country owing to the loss of strength in the process. The method by which the Illinois Central gets new service from such beams is by reinforcing the I-section, after straightening. The first experiment was made with an angle iron, which proved so successful that it has been continued, the angle extending very nearly to the brake head.

This 2 by 2½-in. angle is attached to the beam by six rivets, and when thus reinforced, it withstands all strains except wrecks. A plate would probably prove as effective as an angle and at less cost as the distance y is increased in the formla. $f = \frac{M y}{I}$, in which:

f = intensity of stress at most strained fiber. M = bending moment.

I = moment of inertia. y = distance from neutral axis to most strained fiber.

In either case the most strained fiber is one of compression, which is weaker than would prevail if of tension, but the location of the brake beam fulcrum prevents such stress.

A new freight beam of this description costs $2.41, weighs about 167 lbs., and has a scrap value of 75 cents.

The cost of reinforcing is:

Material	$0.45
Labor	.19
Total	$0.64

This work has been carried on since May, 1909, and, including October, 1910, 10,233 beams have been thus reinforced.

To take care of this work a shop 22 by 70 by 16 ft. was erected in 1909, the building costing $700, and equipment $400. The equipment inside consists of a large oil furnace and the usual devices for straightening beams, etc., always found in shops of this character.

Laboratory.

In the laboratory, car cleaner is made which not only does the work well, but insures the life of the varnish, as no acid goes into the solution. The saving here, about $50 per month, is of less importance than the prevention of destructive car cleaners being applied to coaches.

There are doubtless other economies which railroads might effect, but on which we have not made any progress, among which are:

1. The operation of its own foundry for making brass castings.
2. The making and repairing of springs.
3. The re-tiring of steel wheels, etc., etc.

It may be that these and other economies are being effected by railroads; if so, we would be pleased to hear with what results.

Other questions that suggest themselves are: (a), to what extent should manufacturing be kept separate from repairs to cars and locomotives? (b), to what extent should overhead expenses be charged?

The relationship of these "shop kinks" to the scrap pile is such that we believe the growth of the latter can be matrially impeded, and with economical results to the mechanical department. If you have any of them in operation at your shops let us know about them.

The Illinois Central has progressed far enough into these questions to have found such work very profitable; in fact, it is a sure means of reducing the annual mechanical department cost.

STORY OF THE AIR BRAKE.

At the annual meeting of the American Society of Mechanical Engineers, in the Engineering Societies Building, George Westinghouse, the retiring president of the society, narrated to an audience of several hundred listeners the very interesting story of the inception and development of the air brake.

It is generally conceded that the air brake has done more in the development of railroads than any other appliance. In his address to the society, George Westinghouse, who invented the device now in general use, told in a very interesting way how the idea of an air brake first came to him; of its first trial, and its subsequent development. Incidentally, he took occasion to deny a famous anecdote which had it that Commodore Vanderbilt had summarily ended an interview with the inventor by declaring that he "had no time to listen to any damn fool idea of trying to stop a train with air."

The inventor said that he was on his way from Schenectady to Troy, in 1866, when he was delayed by a collision between two freight trains. That brought to him the suggestion that if the two engineers had had some means of applying brakes to all of the wheels the accident would not have happened. Mr. Westinghouse then described the appliance which he had evolved and which he admitted was very crude; told of his introduction to Ambler, the inventor of the chain brake, and how Ambler had told him that he (Westinghouse) might as well give it up, as the only feasible brake had already been devised.

"That interview," said Mr. Westinghouse, "was the incentive which led me to a more determined pursuit of the problem. Shortly afterward I came across an account of the tunneling of Mount Cenis by machinery driven by compressed air conveyed through 3,000 feet of pipes, the then depth of that tunnel. This account of the use of compressed air instantly indicated that brake apparatus of the kind contemplated for operation by steam could be operated by means of compressed air upon any length of train.

"Officials of the Pennsylvania became interested in the device, the appliance was fitted to a train and a practical and successful demonstration was given.

"Prior to this," the inventor added, "I had opportunities while traveling to present the subject to numerous railroad officials and to endeavor to secure their co-operation in the development of the apparatus. None of those approached appeared to have faith in the idea.

"I suppose many persons present have heard or read of the story of an alleged interview between Commodore Vanderbilt and myself about the application of air brakes to the New York Central. The story as told seems to have appealed to the imagination of many people. As a matter of fact, there is no foundation whatever for it."

The constantly changing conditions of railway operations necessitates many changes in the type of brake. Mr. Westinghouse traced its evolution from the old type to the present triple-valve type, whose operation, he said, was so quick that the longest freight train can now be handled with almost the precision that is obtainable in the control of passenger trains of six cars.—Railway Reporter.

STRUCTURES.

The Oregon & Washington R. R. has awarded the general contract for the erection of the Fourth avenue viaduct at Seattle, Wash., to the Butler Construction Co., at an estimated cost of $150,000. The bridge will be about 1,200 ft. long, with a concrete approach 200 ft. in length, and will be erected for the Oregon & Washington and the Great Northern R. R. This same company has also been awarded the contract for the erection of a timber bridge for the Oregon & Washington over Black river.

The Pennsylvania R. R. has accepted plans for the construction of its passenger station at Ft. Wayne, Ind. The

building will be 196 by 108 ft., and is to be constructed of brick stone and terra cotta, two stories high. The train shed will shelter seven trains of 15 cars each. All baggage will be handled through subways.

The Southern Ry., and others entering Birmingham, Ala., it is stated, have come to an agreement in regard to the construction of viaducts at that place. The city will pay for the construction of approaches to the viaduct and will maintain roadways. Estimated cost to the city, $125,000. The railroad companies' work will cost them about $1,000,000.

The Baltimore & Ohio, it is reported, will build a double-track bridge over Fish creek, near Benwood, W. Va., and will also construct a second track between Benwood and Brooklyn.

The Baltimore & Ohio, it is reported, will erect a roundhouse at New Martinsville, W. Va.

The Southern Ry. is contemplating the expenditure of $150,000 to increase its facilities at Atlanta, Ga.

The Seaboard Air Line will erect a 30x70-ft. passenger station at Shelby, N. C., at a cost of $5,000.

The New York, New Haven & Hartford, in connection with its new station at New Haven, Conn., will build a large pier, with freight sheds, and a basin large enough to accommodate the company's passenger and freight steamers.

The Carolina & Northwestern shops at Hickory, N. C., will consist of a building 50x60 ft. in size, two buildings each 20x60 ft., and two 30x80 ft. Foundations will be of brick and galvanized iron sidings will be used on wooden frames. Work will begin at once.

The Gulf, Colorado & Santa Fe will increase its yard facilities at Ballinger, Tex., at a cost of $17,000; at Canyon City, Tex., at a cost of $16,000; at Temple, Tex., at a cost of $1,800; at Crawford, Tex., at a cost of $2,000; and at Port Bolivar, Tex., at a cost of $3,000.

The St. Louis, Iron Mountain & Southern, it is reported, will remove its roundhouse and shops from Wynne, Ark., to Lexa, Ark.

New Books

HENDRICKS COMMERCIAL REGISTER OF THE UNITED STATES. 1342 pages, cloth, 7¼x10¼; nineteenth annual edition; published by S. E. Hendricks Co., 74 Lafayette St., New York City. Price $10 net.

This index, which is made up of 1328 pages of fine type, lists of the principal manufacturers, and practically all of the manufacturers of machinery in the United States, it gives many separate classifications of the machines built. The index contains information giving the busy engineer an idea where to purchase practically every commodity used in engineering. With the multiplicity of different types of machines under construction, it has been difficult for engineers to locate the manufacturer of a particular article desired, especially when the article was new. In this volume special pains have been taken not only to index the article under its appropriate heading, but also to give a cross-reference under the heading an engineer might look for it. An idea of the comprehensiveness may be gained from the fact that 100 pages are used as an index of the contents. The simplicity of its classifications is an important feature of the Commercial Register. These are so arranged that the book may be used for either purchasing or mailing purposes. All manufacturers of a particular trade are first classified under a general heading for mailing purposes, and each firm or corporation appears again under as many classifications as the variety of its products requires. Considerable information is given following the names of a number of firms which is of assistance to the buyer and saves the expense of writing to a number of firms for the particular article desired. As far as possible the trade names of all the articles classified are included and appear in parentheses between the names and addresses of the different firms appearing under the classifications.

RAILWAY MANAGEMENT AT STATIONS. By E. B. Ivatts; 605 pages, cloth, 5 x 8½; published by McCorquodale Co., London, Eng. (New York, D. Van Nostrand Co.) 5th edition. Price $2.50.

As this book has now been in circulation for over 20 years it needs no comprehensive review. It has met with favor in foreign countries as well as in England, although the problems demonstrated are more applicable to railway operation in Great Britain. The book is a comprehensive treatise on the duties of a station agent from the organization and training of his staff to the proper disposal of the smallest details of his work. A glossary of railway terms is included at the back of the book with an excellent cross index to the contents.

TRACK FORMULAE AND TABLES. By S. S. Roberts; 514 pages, flexible leather, 4 x 6½; published by John Wiley & Sons, New York. Price $3.00.

As its name implies this little book is made up of formulae and tables for the daily use of railway locating and maintenance of way engineers. The formulae are based on the actual properties of the frog and split switch. They have been worked out in the field and have given good results. The book seems to meet the conditions of the purpose for which it was written, that of presenting in a practical manner the track problems most frequently met in actual practice, supplementing by time-saving tables.

Personals

F. W. Rhuark has been appointed a master mechanic of the Baltimore & Ohio, with office at Lorain, O.

D. H. Speakman has been appointed a master mechanic of the Baltimore & Ohio at Benwood, W. Va. He succeeds A. Schaaf.

O. J. Kelly succeeds H. D. Van Valin as a master mechanic of the Baltimore & Ohio at Parkersburg, W. Va.

E. S. Eden has been appointed master mechanic of the Central New England Ry., with office at Hartford, Conn.

Earnest Becker has been appointed a master mechanic of the Chicago & North Western Ry., with office at Green Bay, Wis.

F. W. Peterson, master mechanic of the Chicago & North Western Ry. at Green Bay, has been transferred to Chicago.

J. E. Mourne has been appointed a road foreman of equipment of the Chicago, Rock Island & Pacific Ry., with office at El Dorado, Ark.

C. D. Lide has been appointed master mechanic of the Georgia, Florida & Alabama Ry., with office at Bainbridge, Ga., succeeding J. D. Crawley.

J. C. Garden, master mechanic of the Grand Trunk Ry. at Montreal, has been transferred to Battle Creek, Mich., where he succeeds J. T. McGrath as master mechanic in charge of the locomotive shops.

J. Duguid has been appointed master mechanic of the Grand Trunk Ry., at Montreal, succeeding J. C. Garden, transferred.

J. Gibson has been appointed master mechanic of the Grand Trunk Ry. at Portland, Me.

J. E. Henshaw, general foreman of the St. Louis & San Francisco at Springfield, Mo., has been appointed superintendent of the Springfield shops.

H. Hondser has been appointed assistant master mechanic of the St. Louis & San Francisco, with office at Memphis, Tenn.

Rudolph Ellzey has been appointed master mechanic of the Kentwood & Eastern, with office at Kentwood, La., succeeding John May, resigned.

F. A. Torrey succeeds F. H. Clark as general superintendent of motive power of the Chicago, Burlington & Quincy.

H. F. Lowther, formerly chief clerk to the purchasing agent of the Delaware, Lackawanna & Western R. R., was recently appointed assistant purchasing agent of that road. Mr. Lowther is a young man and this promotion is a well-deserved recognition of the faithful and intelligent service which he has rendered.

Frank H. Clark.

Frank H. Clark, general superintendent of motive power of the Chicago, Burlington & Quincy, has been appointed head of the mechanical department of the Baltimore & Ohio, with like title.

Mr. Clark was born at Pecatonica, Ill., in 1865. He graduated from the University of Illinois in 1890 and followed his university work with several years' training in the office of a firm of consulting engineers distinguished for its railway work. This constitutes his history until he became chief draftsman of the Chicago, Burlington & Quincy in 1894. In 1899 he was appointed mechanical engineer, in 1902 he became superintendent of motive power and three years later general superintendent of motive power of the entire Burlington system. Mr. Clark has found time, in spite of his rather exacting duties, for much important work during the past few years in connection with the American Railway Master Mechanics' and Master Car Builders' Associations, his record as the presiding officer of the latter organization, 1909-10, being one of exceptional activity. He is known as a man of few words and is a good listener; that he has the third usual attribute of this trio—that of capacity for deep thought—is proven by his record. Mr. Clark's work in new fields will be watched with much interest by his host of friends.

F. H. Clark.

H. F. Lowther.

J. T. McGrath.

The employees of the Battle Creek shops have prepared, under the direction of M. H. Westbrook, general foreman, the following biographical sketch of J. T. McGrath, their former master mechanic, which Mr. McGrath himself is far too modest to have prepared:

J. T. McGrath, who, as noted in the December issue of the Railway Master Mechanic, has been appointed superintendent of rolling stock and equipment of the Chicago & Alton, started railroad work as an apprentice at the age of thirteen in the Toronto shops of the Grand Trunk Ry. in the year 1882, and after having completed his apprenticeship, was given a position as chargehand. In 1897 he was promoted to the position of general foreman of the main shops at Stratford, Ont., where his ability as an organizer was quickly recognized by the higher officials, and in 1898 he was appointed master mechanic on the western division with headquarters at Port Huron, Mich. His efforts were attended with success from the first, he not only increased the output very materially but in so doing created and maintained a most friendly relationship between himself and all of the employees. This relationship soon led him to recognize the need of a building where social and educational functions could be held by the employees, there being no building of this kind in that locality. A large dwelling house which was on the company's premises was, at his instruction, converted into a building suitable for a literary and scientific institute, a library installed, classes were commenced in drawing, electricity, and practical mechanics, and expert instructors were appointed, all of which were free to the shop men. Also in this building were installed fine baths for the use of the employees. So successful was this movement that a musical organization was immediately formed consisting of a brass band of thirty pieces and an orchestra of ten which were considered to be among the best amateur organizations in the state. A camera club was also formed which was entirely successful from the start, as it led to very many pleasant outings, particularly in the summer time. Mr. McGrath was one of the most enthusiastic members of this club. After these organizations were running successfully, a horticultural society was started and at the first meeting held, two hundred and eighteen of the shop men registered as members. This society held annually an exhibition of flowers and vegetables at one of which sixteen hundred entries were made.

This club very quickly made a name for itself throughout the state and having heard of it, the Governor of the state came up to see the grounds. He expressed himself of having seen nothing in the state which could equal it and he immediately offered to give a valuable prize to be competed for at the next annual exhibition. The men of the shop also formed hockey, baseball and football clubs and played games with the other shops on the system as well as local games with similar teams and at any of the games one of the most enthusiastic "rooters" for his team was Mr. McGrath. The company quickly saw and appreciated what Mr. McGrath was doing for his men at Port Huron and instituted a similar general movement at all the big shops on the system.

After being at Port Huron for seven years the company

decided to build new locomotive shops and entrusted Mr. McGrath with the designing and planning of the same. It appealed so forcibly to the officials that he was given everything he requested and which resulted in the building and equipping of what is considered by all of the prominent railroad experts who visit it to be one of the most original, modern and up-to-date shops in America. This was completed in two years and he and his whole force were removed to Battle Creek.

He has now succeeded in building up around him a most complete railroad shop organization, introducing the most approved modern shop systems. He has patented and is successfully marketing several of his special railroad tools and machinery, among them being a complete flue repair department, including automatic safe end cutting machine, pneumatic flue welder, pneumatic flue expanding and hot saw, also a most successful pneumatic turntable motor.

Personally a most approachable man, always willing to hear what any of his men or boys have to say and giving to each every consideration. He has taken special interest in advancing his apprentices and has afforded them every opportunity to better their conditions in many ways. If it can be said he has a hobby, it is for cleanliness and tidiness about the shops and surroundings and it has never yet gone on record that a sufficient excuse for a dirty shop or department has been invented. Upon the announcement being made that he was about to leave, the shop men presented him with a beautiful diamond ring, the presentation being made by W. E. Skimmin, the oldest employee. Mr. and Mrs. McGrath entertained the shop employees, their wives and sweethearts in the shop auditorium where upwards of six hundred were in attendance.

He goes to his new duties with the best wishes of all his employees who, while feeling his removal a direct personal loss, are unanimous in the opinion that the C. & A. employees will soon learn to appreciate the value of their newly appointed superior officer.

J. F. Mann.

W. W. Chilton.

OBITUARY.

Joseph F. Mann, general foreman of the car department of the Pere Marquette R. R., died November 12, 1910. Mr. Mann was born May 13, 1862, at Belfast, N. Y., and with his parents moved to Saginaw, Mich., in 1865, which has since been his home and where he was educated in the public schools, entering railroad service in 1876 as a car repairer with the then Flint & Pere Marquette Railroad, but which has since become a part of the Pere Marquette System. In 1900 he was promoted to the position of assistant foreman and 1903 to that of general foreman car department, Saginaw District, which position he held to the time of his death. Mr. Mann was possessed of a sterling character and was universally esteemed and respected by all who knew him, both in and outside of railway circles. He was a member of the Master Car Builders' and Chief Interchange Car Inspectors' and Car Foremen's Associations and had always taken an active interest in all matters pertaining to the work of his department. On October 4, 1910, Mr. Mann was stricken with apoplexy from which he never rallied, his death taking place November 12. He is survived by his wife and one daughter, Miss Gertrude Mann, of Saginaw, Mich., and in his death the world loses one of its best citizens, the Pere Marquette Railroad one of its most efficient and faithful employes and his family a loving husband and father.

William W. Chilton, general foreman of the car department of the New York Central & Hudson River R. R., died October 26, 1910. Mr. Chilton was born November 21, 1853, at Lowell, Mass., and began his railroad work with the Fitchburg Railroad, later known as the Boston & Maine, where he remained twenty-five years, the later part of which he was employed as foreman under F. W. Brazier and F. W. Eddy. On May 1, 1900, he left the service of the Boston & Maine and accepted a position with the N. Y. C. Lines at Albany, N. Y., as foreman of the freight car department, where he was employed until November 1, 1902, when he was transferred to Watertown, N. Y., as general foreman of the car department which position he held until his death, October 26, 1910. Mr. Chilton was possessed of an exemplary character and loving disposition, ever faithful to his duties and the company he represented, and was esteemed and respected by all who knew him. He was a member of the Chief Interchange Car Inspectors' and Car Foremen's Association of America and always took an active part in all the proceedings of the association. Mr. Chilton is survived by his wife, who, by his death, loses a kind and loving husband.

STRANGE IF TRUE.

The following is taken from the "Electric Traction Weekly":

The recent investigations into the causes of accidents by the railroad commissions of Indiana and Illinois and the replies

made by the interurban operators indicate in the strongest possible manner that experienced steam railroad trainmen do not make the best motormen and conductors for high speed interurban roads. The evidence on this point formed one of the strongest pleas by the defendant companies as to why the requirement suggested by the commission that the interurban motormen shall have had at least one year's experience in steam or interurban train service before qualifying as a motorman on the lines in these states should not stand.

Perusal of the report of the Indiana conference and that of the Illinois conference will show that some of the strongest operating men in the country are in favor of the plan of training their own men by their own methods for their own service. Interurban officials, who themselves have had long experience on steam roads, testified that originally they had been in favor of the steam road men, but that practical experience in the newer field indicated that conditions were vastly different from those with which they had been heretofore familiar. Opinions expressed by these men indicate that the steam road employe becomes machine-like in his methods and that it is difficult to impress upon him the difference between a 40-car freight train and a single-car interurban. He is apt to regard the interurban car as something of a toy and he does not show the proper respect for its equipment. It is difficult for him to learn the intricacies of the electrical apparatus and he dislikes to undertake to make emergency repairs to bring a car home. Men who have been employed on steam roads as brakemen or flagmen are often ignorant and it is difficult to train them in operating rules. About the only steam road man who seems desirable to the majority of interurban operators is the young man who has spent a year or two in the steam service and has not reached the higher grades in the service and wants a position where he can be at home with his family at night. Such men are willing to sacrifice the question of the higher wages paid by steam roads to first grade locomotive engineers for the better runs and shorter hours of the interurban service, and where they have not become set in their ways and show a willingness to learn the difference between the two systems and the two types of equipment, they make excellent interurban trainmen.

Among The Manufacturers

A HIGH DUTY SHAPER.

Among the machines purchased for the new machine and erecting shop of the Chicago & Northwestern Ry., as noted in the RAILWAY MASTER MECHANIC for December, 1910, were four high duty 24-in. shapers manufactured by Gould & Eberhardt, Newark, N. J. This concern has a reputation for excellence of output of years' standing.

The shapers are heavy, powerful and accurate machines of pleasing design. Plenty of metal is intelligently distributed throughout frame of the machine where most required, insuring stiffness under heaviest cuts. In addition they are remarkably quick-acting machines for the medium and lighter work. The column is wide and deep, and furnishes ample bearing for the ram, especially at the extreme forward end of the stroke, and is stiffly ribbed to resist strains. The main gear hub bearing is cast solidly with the main wall of the frame, and stiffly supported by internal ribs in the frame wall, obviating the tendency to spring. The base of the machine is of pan construction both inside and out, for catching oil-drippings, etc., and preventing oil-soaked floors.

These shapers are fitted with a "Double Train Gear Drive," which consists of a double main or bull wheel, one being smaller in diameter than the other. This combination permits the working of high-speed cutting steels to the limit, and provides a high number of metal-removing strokes to the ram for the light finishing cuts, without excessive peripheral velocity to the gearing, or a mechanism having a multiplicity of wearing parts. It also provides great power and slow speed for the long and heavy roughing cuts. This construction insures maximum output, long life to the machine and is quiet running. The cone shaft is the only

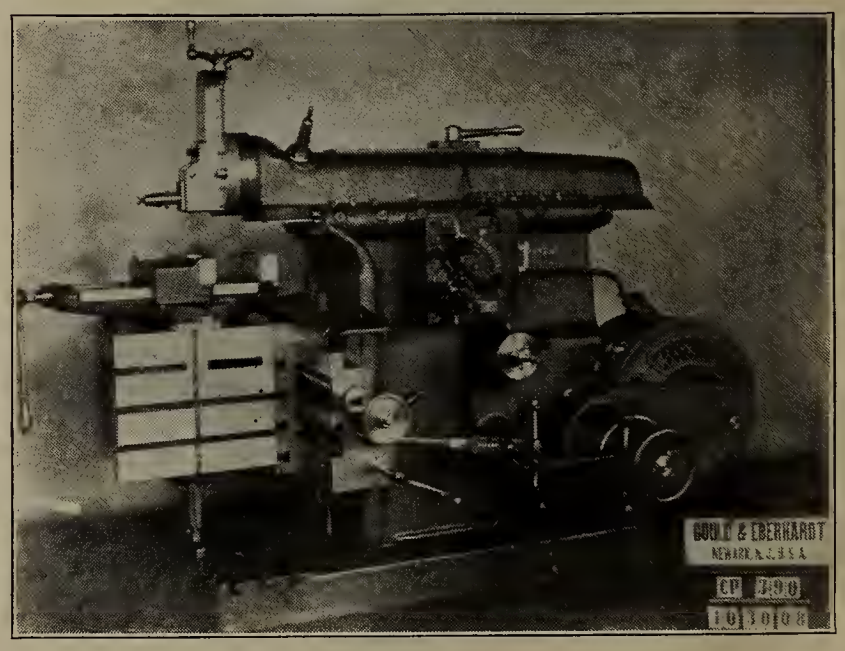

Gould & Eberhardt 24-Inch High Duty Shaper.

revolving shaft in the machine. The shaft upon which the intermediate gear runs is held stationary in the frame. This shaft is hardened and ground and is so arranged that the intermediate gear has ideal bearing surface and exception-

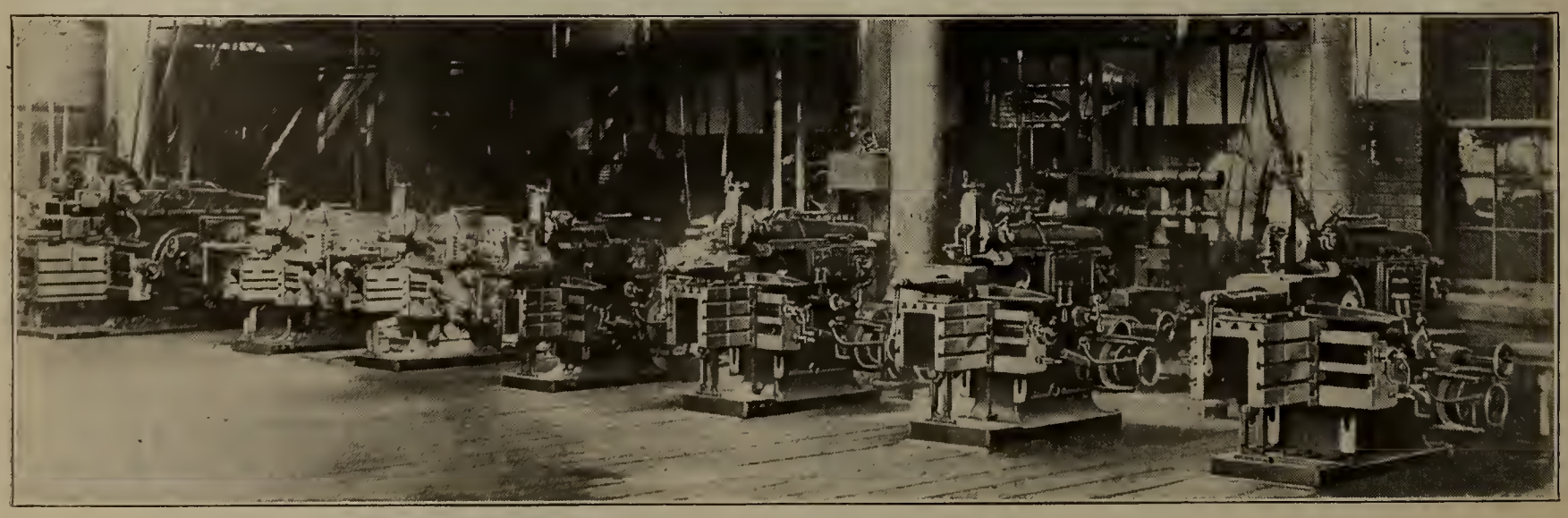

Battery of Gould & Eberhardt Shapers.

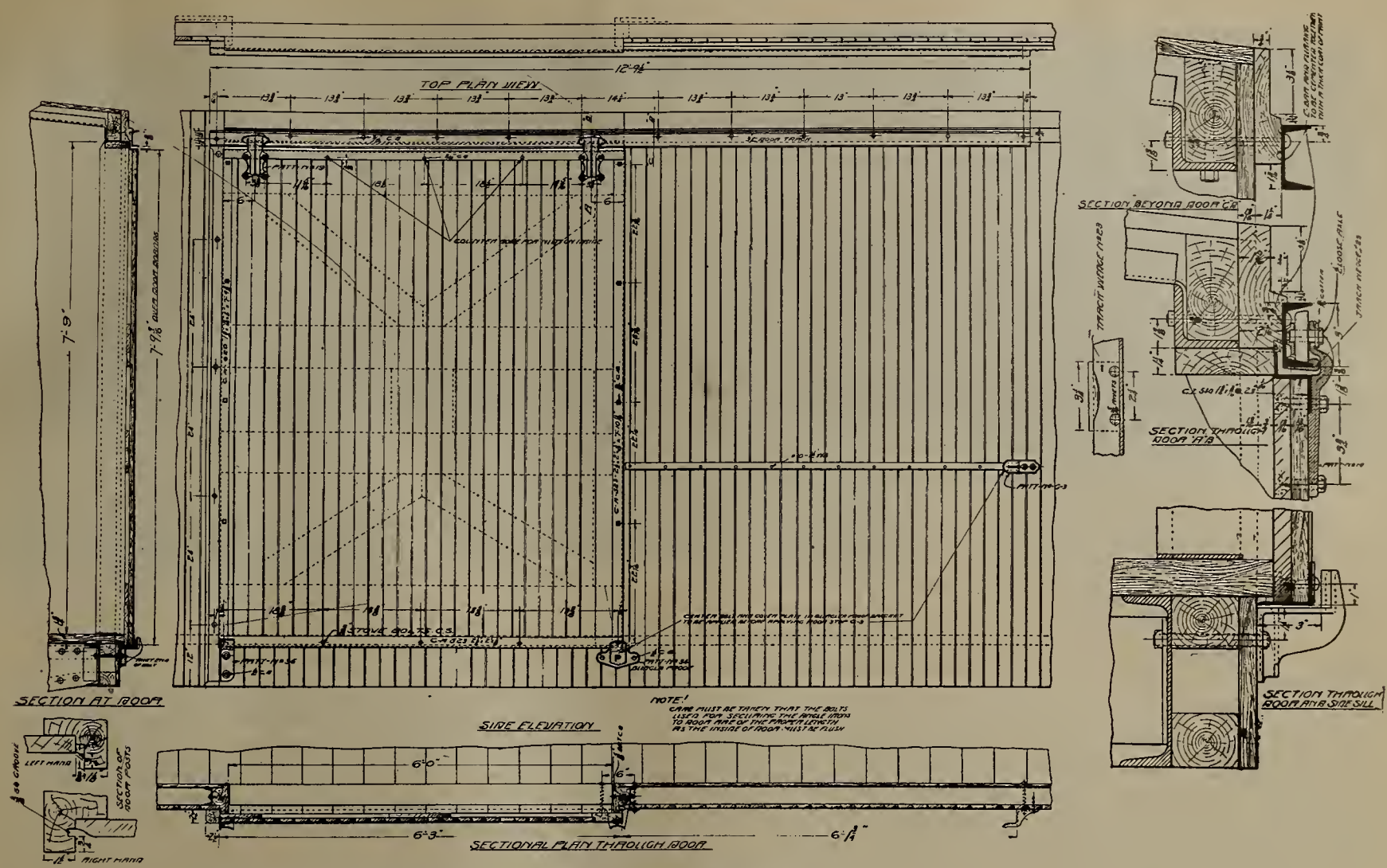

Details of Jones "Peerless" Car Door.

ally good lubrication. All gearing is cut from the solid and is quiet running; all running bearings subject to heavy wear are bushed, preserving original centers. All shafts and screws are made from a special high grade of machinery steel. All bearings are of generous proportions, and all sliding surfaces are accurately hand-scraped to surface plates.

The 24-in. machine shown in the illustration has a horizontal table travel of 30 inches, the vertical movement of the table is 15½ inches and the maximum distance from the ram to the table is 21 inches. The floor space required is 106 inches by 50 inches. The machines have a net weight of 4,400 pounds.

JONES PEERLESS CAR DOOR.

The illustration, herewith, shows an improved design in car doors, manufactured by the Jones Car Door Co., Monadnock Block, Chicago. The drawing shows the door as it was applied to cars of the St. Louis & San Francisco R. R. The construction is at once evident and the advantages are substantially as follows:

The upper surface of the track protects the hangers from eaves' drippings and acts as a trackway for the wheels, should the door lift up while being started, making it impossible for the door to bind against the bottom of the track.

The track is the strongest section used in connection with the car doors; it will not bend, and it also helps to strengthen the plate.

The Z-bar, which is fastened to the top of door, keeps the latter from displacement, protects the top from water, prevents it from warping and carries all water off outside of the car, including any which might get back of the track.

The wheel deflectors force the door tight against the car body when the door is in a closed position. When in an open position, the bevel surface of the trackway causes the wheels to move to the outside of same, thereby providing ample clearance.

The loose axle and wheel both revolve in the hanger until the door is moved about 5 inches from either a closed or open position, after which the wheel revolves on the axle, which binds in the converging ends of the slot in the hanger. This feature prevents slamming of the door.

The cotter pin keeps the axle from becoming displaced in any way.

The weatherproof feature was proved some time ago in an experimental test before several officials. This test entailed the directing of a powerful stream of water against the door from all directions. It is stated that no leakage resulted.

BUCKWALTER ELECTRIC BAGGAGE TRUCKS.

The principal feature of the Buckwalter electric baggage truck is the use of double end control, which embodies a folding platform for the operator and sockets for controller and steering handles at each end, so that the truck can be operated with equal facility in either direction, thus avoiding the necessity of turning on narrow platforms or runways. The baggage porter stands on a platform at the end of the truck which happens to be pointed toward his destination. He simply plugs in the steering and controller handles in their proper sockets, and the truck is ready for operation.

A small platform is hinged at each end of the truck, the two being connected so that the operative position of the one involves the closing of the other. Allowing the operator to ride enables the truck to be operated at two or three times the speed of a hand truck, and conserves his energy for transferring of baggage at his destination. As he stands squarely on both feet and leans against the end of the truck he has positive control of the steering apparatus.

The four-wheel steering arrangement enables the truck to be turned in a very small radius, as compared with its size, permitting it to be operated safely in narrow passage ways. This also has the advantage that the driver need only see that the front end of his truck clears a column or other obstruction, as the then rear end tracks with the front.

The tread of the wheels is widened so that the wheels are just

Drop Frame Electric Truck.

Straight Frame Electric Truck.

within the protection of the side sills; and a special form of steering knuckle was developed to reduce hub projection to within the rim of the wheels, which still further reduces the possibility of collision with railway equipment, columns or other trucks. The sockets for the controlling apparatus do not project beyond the rear end of the truck, which reduces the liability to damage on elevators.

The truck is constructed on the four-point support principle to provide for the greatest stability to reduce throwing of baggage. Each wheel carries its quota of weight on account of the flexibility of frame construction. The storage batteries and motor are flexibly suspended from the frame to reduct vibration. The latter is geared through heavy double reduction spur gearing directly to the wheel rims. The controller is operated directly from either end of the truck and provides three speeds, namely, two, four and six miles an hour in either direction. The brakes are likewise operated from the driver's platform from either end of the truck and operate on the trailing wheels. The brake shoes are of the internal expanding type, bearing directly on the wheel rims, and develop about twenty times the braking power it is possible to get with a hand truck. The brakes may be applied by foot pedal from either of the operators' platforms, and also are applied automatically when the driver steps off the platform. The brake is also connected to open the electric circuit when the driver leaves the truck or applies the brake.

The trucks are built in two types. The straight frame type is intended for stations where the platform is approximately on a level with the rails. Twelve of these trucks are in service in the Jersey City station of the Pennsylvania Railroad; they have a capacity of 4,000 lbs. each, and weigh approximately 2,400 lbs. Twelve trucks of a similar model are in use at the Washington terminal.

The drop frame trucks are intended for stations having depressed tracks, and, as the height of these trucks is only nine inches, the truck floor is approximately on a level with the baggage car floors, which reduces the labor of handling baggage to a minimum. Twenty-five of these trucks are in use at the new Pennsylvania station at New York City and a like number are on order. Three are in use at the Grand Central station, New York City.

The saving of labor due to these trucks varies with the service. In the ordinary passenger station the saving amounts to two or three men per truck, while another of the trucks in shop service at Altoona has replaced four men. Their greatest value lies in the expedition with which baggage is handled, as the time between the baggage room and the trains is more than cut in half, while the fact that the operator arrives at the train in fresh physical condition enables him to unload his truck very quickly. Baggage masters estimate that delays to trains for baggage have been reduced from three to ten minutes since the introduction of these trucks. Since using these trucks it has been found that the baggage departments can get along and handle their work during rush periods, as occur in the spring vacation season, Labor Day and holidays, without taking on "green" men from other departments, which, by maintaining the baggage organization intact, reduces the delays and misunderstandings with the public, due to mistakes in improperly forwarding baggage, while at the same time effecting a considerable reduction in the wages of the extra men.

The double end baggage trucks were designed and patented by T. V. Buckwalter, Altoona, Pa., and are manufactured by the Elwell-Parker Electric Co., Cleveland, O. L. C. Brown, 50 Church street, New York City, is sales manager for the latter company, and to him all inquiries should be addressed.

PRACTICAL OIL BURNERS, FORGES AND TORCHES.

Since the introduction of oil as fuel in the railway shops there has been a growing demand for a good burner for getting the greatest amount of heat out of the oil fuel. Attention has been called to a practical burner familiarly known as the Hauck

Fig. 1.

Fig. 2.

Fig. 3.

Fig. 4.

Fig. 5.

burner. This device is particularly adapted for nearly all kinds of railway and manufacturing shop work. Referring to Figure 1 the method of using the burner for different classes of work will be noted. The boiler maker can easily concentrate the flame to the spot required to be heated without heating the finished portion of boiler. The flame is controlled from any angle and with pointed or spreading heat driving into any corner, for laying up seams on dome flanges, throat sheets, mud rings, etc. For straightening distorted rings or buckled sheets it is particularly well adapted, also for flanging or off-setting work.

For the man who has pipe bending to do, the Hauck burner finds favor, as it affords a convenient and less expensive method as compared with coal heat. The heat with this oil burner is carried directly to the portion to be bent or straightened (Fig. 2), producing quick results. In the blacksmith shop this method comes in handy in heating frames to be welded on the engine. The heat is intense and puts the broken frame in a condition for welding in comparatively short time.

By referring to Fig. 3 one can understand the application of oil heat applied by this burner in the machine shop. This illustration shows how a bent piston rod was said to have been heated and straightened in ten minutes, which is a commendable record. For shrinking tires, or bands, melting out bearings, and many other places in the shop, this device demonstrates its usefulness.

The brazing forge shown in Fig. 4 is designed to meet with popular favor on account of its wide range of usefulness. The outfit complete consists of a stationary burner placed under the bed and attached to the oil tank. A portable burner can also be attached to the tank and used in connection with brazing or for forge work. These forges are built to order and their construction is arranged to meet the necessary conditions, with or without wheels, or with hoods when required for compressed air or steam, or the hand pump attachment can be supplied when required.

Fig. 5 illustrates two sizes of the Hauck kerosene torches, but they make many larger sizes. They are simple in design, and very strongly built to stand rough usage. These torches have solved the problem to use kerosene with better results than gasolene. They are adaptable for various heating operations, light brazing, tinning, producing an intense clear flame, etc.

These oil burners, forges and torches are placed on the market by the Hauck Manufacturing Co., 140 Cedar Street, New York City.

WEAVER ROLLER JAW DRILL CHUCK.

High speed steel has called for drill chucks which will withstand the increasing strains to which they are subjected and it has also brought the straight shank drill into more favor because of its greater strength. The difficulty in using the straight shank has been in getting a satisfactory chuck. The chuck illustrated here, which is made by the Weaver Mfg. Co., of Springfield, Ill., is a decided departure from the principles

Fig. 1.

Fig. 2.

Fig. 3.

W. C. McAdoo, Mgr. Schoellkopf, Hartford & Hanna Co.

Chas. H. Spotts, Asst. Mgr. Schoellkopf, Hartford & Hanna Co.

of construction universal with other drill chucks. As the name implies, the characteristic feature of this chuck is the three hardened steel rolls which take the place of the sharp jaws of other chucks. The rolls are tool steel hardened and ground and their smooth finished surface will not mar or deface the drill shank no matter how intense the pressure or "grip" may be.

Figure 1 shows the cage which contains and controls the three rolls which operate between the drill shank and the three cam shaped planes which constitute the inner walls of the chuck body. The rolls are shown in Fig. 2. The cage may readily be slipped out of the chuck body by the withdrawal of a pin and is geared to a worm in such a manner as to be rotated backward and forward by the key, thus carrying the rolls up or down the cam faces to conform to the varying size drill shanks. Fig. 3 shows the one piece chuck body on the inside of which may be seen the cam shaped surfaces upon which the rolls work. As the grip of the chuck varies directly with the increase of resistance of the drill, the operator merely turns his key until the rolls are in contact; it is not necessary that he strain his muscles and temper in twisting the key tight enough to make the drill stick. The extreme simplicity of this chuck is a strong point in its favor. As will be seen from the cuts, its parts are few and simple, with no complicated or delicate parts to break or wear and the heavy body has no parts to become broken by careless handling.

"STEELKOTE" PAINT.

An old establishment and well known supply house—Schoellkopf, Hartford & Hanna Co., of Buffalo—has established a new department to its business and is energetically going after the railroad business on "Steelkote" structural paints. General sales offices for the paint department have been opened in the Hudson Terminal, 30 Church Street, New York City, under the personal direction of Mr. W. C. McAdoo, manager, and Charles H. Spotts, assistant manager, two "old-timers" in railroad supply lines.

Mr. McAdoo states that the "Steelkote" standard black paint has been manufactured for three years, but during this time the paint has been under practical tests by the

Factory in Which "Steelkote" Paint Is Made.

firm, chemical plants and railroads, to secure positive evidence of its protective value before opening offices for its sale in different parts of the world. Railroad officials will be particularly interested in the statement as to the "Steelkote" line of paints.

Steelkote "Standard" paint is black and cannot be made in colors without impairing its protective value. It is especially resistant to acids, alkalis and extreme dampness.

Tank Cars of the Contact Process Co., Painted With "Steelkote" Acid-Proof Paint.

Swing Saw for Car Shop Use.

Steelkote "Standard" black was designed primarily for protection of chemical plants, steel cars, bridges subjected to brine drippings and sulphurous gases, and steelwork covered by building materials. It is a truly protective paint—not decorative. Mr. McAdoo states that, recognizing the fact that the railroad trade demands cannot be met with one class of paint, the new policy of Schoellkopf, Harftord & Hanna Co. places it in a position of supplying special paints for special purposes, the chemists, laboratories and practical paint representatives being constantly engaged in producing the class of preservative material that represents the three factors that most appeal to railroad officials—decoration, protection and moderate price in structural paints for exposed metal surfaces. The supplying of paint for steel cars will be given the special attention of both Mr. McAdoo and Mr. Spotts, who have had long years of experience in this particular line of trade. "Steelkote" will be an extensively used paint in the future by virtue of its own qualities, the firm behind the paint and the activities of its manager and assistant manager.

CAR SHOP SWING SAW.

A new swing cut-off saw for car shop use has been placed on the market by J. A. Fay & Egan Co., 145-165 W. Front street, Cincinnati, O.

This saw, which is illustrated herewith, is especially designed for heavy cut-off in car shops. In its construction, the manufacturers have given special attention to the frame, making it very heavy and substantial. It will be noted from the illustration that the main driving pulley is very large, an essential in the manufacture of heavy material. The manufacturer's automatic adjustable counterweight makes it easy to operate this machine and insures a quick return of the saw when released. The saw mandrel is fitted with the manufacturer's expansion bush saw flange, which permits the use of a saw having a slightly larger hole than regular. The journal bearings are self-oiling from chambers underneath. A guard is furnished with each machine to which is attached a handle for operating.

Capacity: With the largest saw practicable (56 in. diameter) it will cut off 19 in. square or 48 in. wide by 2 in. thick.

TURNTABLE TRACTOR FOR HEAVY DUTY.

The increasing use of Mallet locomotives of great weight and length has forced the railroads to face the difficult problem of turning these locomotives. In the first place they are very heavy, the weight running to 350 tons and over, but what makes the problem of turning even more difficult is the great length of wheel base. Furthermore, if a table but slightly longer than the locomotive is used, it will be very much more heavily loaded at the end under the locomotive than under the tender even when the tender is fully loaded with coal and water. To make it possible to balance such locomotives under all conditions would require the construction of turntables of excessive length, the direct and indirect expense of which would be enormous. The other alternative is to turn the engines on tables merely long enough to carry them without making any attempt at balancing. When one realizes that this means carrying an unbalanced load of upwards of 50 tons in some cases on the trucks at one end of the table it will readily be seen that not only must a powerful tractor be used, but one having great tractive effort. Messrs. Geo. P. Nichols & Bro., Chicago, have recently developed an electric tractor for this class of service which in general arrangement and appearance is similar to their standard

Nichols Tractor Applied to Virginian Ry. Turntable.

electric tractor but with its tractive effort increased to meet the severest requirements of the service referred to above.

The illustration shows one of these tractors handling the Virginian Railway Co.'s engine No. 600 on a 100-ft. turntable. This locomotive weighs 310 tons and is 96 ft. 4 in. long. The tractor is one of four of equal power in service on the Virginian. The same equipment is in successful service, performing equally heavy duty, on other railways.

STOCKBRIDGE TWO-PIECE CRANK SHAPER.

In the illustration is shown a machine which has been designed with the idea of meeting all the requirements of an up-to-date manufacturing tool and to this end a heavy, rigid machine has been built, the shaper weighing 2,850 lbs. Besides the regular features characteristic of Stockbridge shapers, this machine embodies several new features designed to add materially to its productive capacity. Among these is the column ways on which the cross rail slides. The method of attaching the cross rail to the column is comparatively new to shaper practice, though long employed in milling machine design.

With this construction one gib is cast solid with the cross rail, which, besides adding to stiffness, prevents possibility of the rail tipping away from the column when the adjusting gib, which is on the working side of shaper is loosened. With this construction no time is lost in going around the machine to tighten and loosen binder bolts every time the cross rail is raised or lowered, as is necessary where two loose gibs are used. By simply tightening the gib binder screws on the working side of the shaper the cross rail is locked to the column.

The rocker arm is of special design. The slide ribs are cored in a U shape, making an exceptionally strong construction. The slot in the rocker arm is of unusual depth and width to provide ample surface for the crank block.

The ram is carried around on a semi-circle on the top and the sides are built straight down. This construction, together with internal ribbing, gives an unusually strong and stiff ram. The head is accurately graduated and can be adjusted to any angle. It is locked in place by two bolts, one on either side. For taking up the wear in the ram ways, tapered packings are provided, which run the entire length of column and are adjusted from either end by means of screws.

Stockbridge 16-Inch Back-Geared Shaper.

The cross feed is automatic in either direction. Adjustment of the feed can be made while the machine is in motion. The cross feed is so constructed that there is no necessity of changing the position of the cross feed rod, when it is desired to reverse the direction of cross feed. The reversing is done by movement of the block in the slide to one side or the other of the center, the slide having a reciprocating motion.

The base extends well out in front and has slots for strapping the work to it if desired. With this machine an angle iron is provided which bolts to the base and carries a sliding upright, which adjusts itself to the various heights of the knee automatically. Setting up the two bolts locks the slide in position. In conjunction with this construction the knee is hooked over the saddle, the saddle taking the forward thrust, which would otherwise come on the bolts which fasten the knee to the saddle.

The cone is supported on a separate bearing built out from the side of the column. The bearing on which the cone runs is self-oiling. All pull of belt is carried on this bearing, thus relieving the driving shaft. The driving shafts are carried through the column and are supported at either end by bushed boxes which are self-oiling. All change gears are made of steel. The four-step cone, with back gears, gives eight changes of ram speed.

From the dimensions given it will be noted that this machine is particularly heavy and of unusual capacity for a 16-inch machine.

Actual length of stroke	16¾ in.
Vertical travel of table	14¾ in.
Horizontal travel of table	23 in.
Minimum distance of ram to table	2½ in.
Maximum distance from ram to table	17 in.
Feed to head	6½ in.
Top of table	14¾ x 13½ in.
Sides of table	14¾ x 13¾ in.
Ram bearing in table	30 in.
Length of ram	36 in.
Width of ram in table	10¼ in
Poppit takes tool	⅝ x 1¼ in
Takes shaft for key-seating	2¼ in.
Vise opens	12 in.
Size of vise jaws	12 x 2½ in.
Tight and loose pulleys on countershaft	14 x 3½ in.
Speed of countershaft for cast iron	300 rev.
Finished weight of machine	2850 lbs.

New Literature

J. Faessler Mfg. Co., of Moberly, Mo., has issued catalog number 27 of boiler makers' tools which includes roller flue expanders, sectional loading expanders, flue cutters and countersinking tools.

* * *

The latest catalogue of the Emerson Steam Pump Co., of Alexandria, Va., is a credit to the company, both typographically and with reference to the subject-matter.

* * *

The Smooth-On Mfg. Co., of Jersey City, N. J., has issued an attractive little booklet describing the firm's latest product—Smooth-On iron paint.

* * *

The Westinghouse Electric & Manufacturing Company has just issued its Part Catalogues Nos. 6141 and 6143. No. 6141 lists parts for the Westinghouse type 306 interpole railway motor for direct-current circuits. No. 6143 lists standard metallic brushes for A. C. and D. C. circuits.

J. A. Fay & Egan Co. have issued a new catalog No. 84 containing 384 pages in two colors, illustrated with fine half-tone plates, bound in a five-color cover. This catalog is a reduced reproduction of the company's large general catalog.

* * *

The Carlyle Johnson Machine Co. has issued catalogue "E" for 1911. It is enclosed in a handsome cover of two-toned blue, with a clutch cut and company monogram embossed thereon, and is filled with attractive illustrations showing the Johnson clutch, factory views, etc. It deals almost exclusively with driving of machinery through friction clutches.

* * *

The Adams Co. of Dubuque, Ia., has issued circular 821 dealing with the Farwell gear tester.

* * *

Billings & Spencer Co., of Hartford, Conn., has issued a very attractive catalogue of drop hammers and forging machinery.

Industrial Notes

The Cleveland Tool & Supply Co., Cleveland, Ohio, has purchased the stock, fixtures and good will of the Excelsior Supply Co., Detroit, distributer for Shelby seamless mechanical steel tubing in Detroit. The Cleveland company will maintain the present warehouse and office at 29 East Atwater street, with an increased stock of tubing, as distributer for the National Tube Co., and will handle from Detroit the business formerly carried on by the Excelsior Supply Co., in eastern Michigan. The transfer took place December 12. Mr. W. M. Roberts, formerly with the Excelsior company, will continue in charge of the Detroit warehouse.

The Hill-Evans Rail Chair & Coupling Co., Belfast, Me., has been incorporated with $50,000 capital. The company will make railway supplies and appurtenances, especially the Hill-Evans coupling and joint, patent No. 958,241, May 17, 1910, and owned by Jesse C. Evans, Palmer G. Hill, Shelton M. White and William J. Alexander, of Lumberton, N. C. The directors are Austin W. Keating, president; Ralph O'Connell, treasurer; Maurice W. Lord, clerk, all of Belfast. The stockholders are the four men from Lumberton and the three from Belfast.

The following officers of the Haskell & Barker Car Co. were elected on Dec. 22: President, W. J. McBride; treasurer, Charles Porter; secretary, Louis Boisot; auditor, S. J. Taylor.

The Locomotive Superheater Co. has announced the fact that Mr. George L. Bourne has been elected second vice-president of the company, with headquarters in the People's Gas building, Chicago, Ill.

The Railway Safety Equipment Co., Chicago, has been incorporated to manufacture an automatic stop device and other railway supplies. The incorporators are Clyde A. Mann, James J. Sheridan and C. F. Ross. The capital at present is nominal, but will amount to $250,000 shortly. The automatic stop will be made under the Collord-Rohe patents, which include patents on switch connections and semaphore equipment.

The Linde Air Product Co., which has operated in Buffalo, N. Y., for two years, has purchased a site at Wall Station, near Pittsburg, and will erect a plant and begin work at that place.

William Taylor, formerly in charge of the Southern affairs of the Galena Signal Oil Co., Franklin, Pa., has been made Southern representative of the Nathan Manufacturing Co., New York.

A quantity of track material for the Panama Canal work, about 8,000 tons will be advertised for within the next few weeks. It is to form part of the rack railroad on which the electric locomotives, which will tow ships through the locks, will run along the top of the lock walls. It includes all materials necessary for the construction of the railroad, excepting a small quantity of materials on hand and the rails splice bars and steel track bolts, and includes also 52 switches complete, with frogs. The larger items are: 3,212,544 pounds of steel cross-ties, 1,934,240 pounds of rolled steel conductor-slot covers, 6,554,000 pounds of carbon steel track castings, 831,744 pounds of copper conductor rails, 721,250 pounds of steel conductor rails, 1,273,090 pounds of steel channels, 445,000 pounds of malleable iron castings, and smaller quantities of tie clips, bolts, nuts, splice bars, rivets, insulators, etc. About 2,000 tons of 90-pound steel rail for the towing system will be included in the annual contract for rails. The rack railroad will be installed by the Commission and the delivery of the material extends over a period of two years, so that the erection may keep pace with the concret construction of the locks. A description of this electric system may be found in the December 1910 issue of the Railway Master Mechanic.

The Kennicott Co., Chicago Heights, Ill., has leased one-half of the 14th floor of the Corn Exchange Bank building, Chicago, to be occupied by its sales office exclusively. The company is engaging in new lines and increases in its previous lines are responsible for this step.

The Steel Fire-Proof Construction Co. of Cincinnati is now occupying the factory formerly used by the Ritter Folding Door Co., in Cincinnati.

Cass L. Kinnecott, vice-president and general manager of the Kennicott Co., Chicago Heights, Ill., will deliver an address before the engineering students of the University of Illinois, early in February, on The Application of Water Softening to Economical Locomotive Operation.

The Jeffrey Manufacturing Co. Columbus, Ohio, has opened a new office in the Fourth National Bank building, Atlanta, Ga., with Mr. D. C. Rose, formerly with the Dodge Mfg. Co., as manager. A stock of Jeffrey chains and catalogs will be on hand. This is the tenth Jeffrey branch office in the United States, although there are over 100 Jeffrey agencies situated in the principal cities of the United States, as well as in the leading commercial centers all over the world. Jeffrey products consist of elevating and conveying machinery for handling and distributing material for every possible purpose, including the designing, supervision, manufacturing, assembling and erecting of same.

Mr. T. H. Price, who has been connected with the Horace L. Winslow Co. of Chicago, has been appointed representative in the railway lubrication department of the Indian Refining Co., Cincinnati, Ohio.

S. L. Kemps has been elected secretary of the T. H. Symington Co., Baltimore, Md.

Of the locomotives recently ordered by the New York Central, 85 will be fitted with superheater of the Locomotive Superheater Company, New York.

The St. Louis Car Roof Co. has been incorporated with office at St. Louis, Mo., and $100,000 capital stock, by James B. Case, Lucian R. Bleackmer, David H. Hays and others.

The Calumet Car Co., which recently completed a new car repair plant at Calumet, Ind., will begin operations with the wrecking of 3,600 box cars for the Chicago Great Western. Charles J. Nash, chief mechanical engineer of the W. H. Miner Co., Chicago, and for 14 years mechanical engineer of the Pullman Co. at the Chicago works, was on December 1 appointed a representative of the Westinghouse Air Brake Company, Pittsburgh, Pa., with headquarters in the Railway Exchange Building, Chicago.

Recent Railway Mechanical Patents

Material for this department is compiled expressly for RAILWAY MASTER MECHANIC by Watson & Boyden, Patent and Trademark Attorneys and Solicitors, 918 F Street, N. W., Washington, D. C., and to them all inquiries in regard to patents, trademarks, copyrights, etc., and litigation affecting the same should be addressed.

A complete printed copy of the specification and drawing of any United States patent in print will be sent, postpaid, on application to the above firm, to any address for ten cents.

Car Brake-Beam Safety-Chain Holder.

Carl L. Schwartz, St. Louis, Mo.

976,220. Patented Nov. 22, 1910.

This invention relates particularly to the holder or clip usually combined with a wheel or finger-guard, for the attachment to an outside hung car brake-beam (or when the latter is suspended from the car body independently of the truck) of the safety chain, which in the case of breakage of one of the brake-hangers prevents the brake-beam from falling to the track, and the invention has for its object to facilitate access to the fastenings of the holder for disconnecting it and the chain from the brake-beam when in service. To this end a rod F passes through the flanges of the brake-beam and has a bend or crook 3 adapted to receive the link of the safety chain. The projecting end 3′ of the rod forms a guard finger for preventing excessive longitudinal play of the brake-beam.

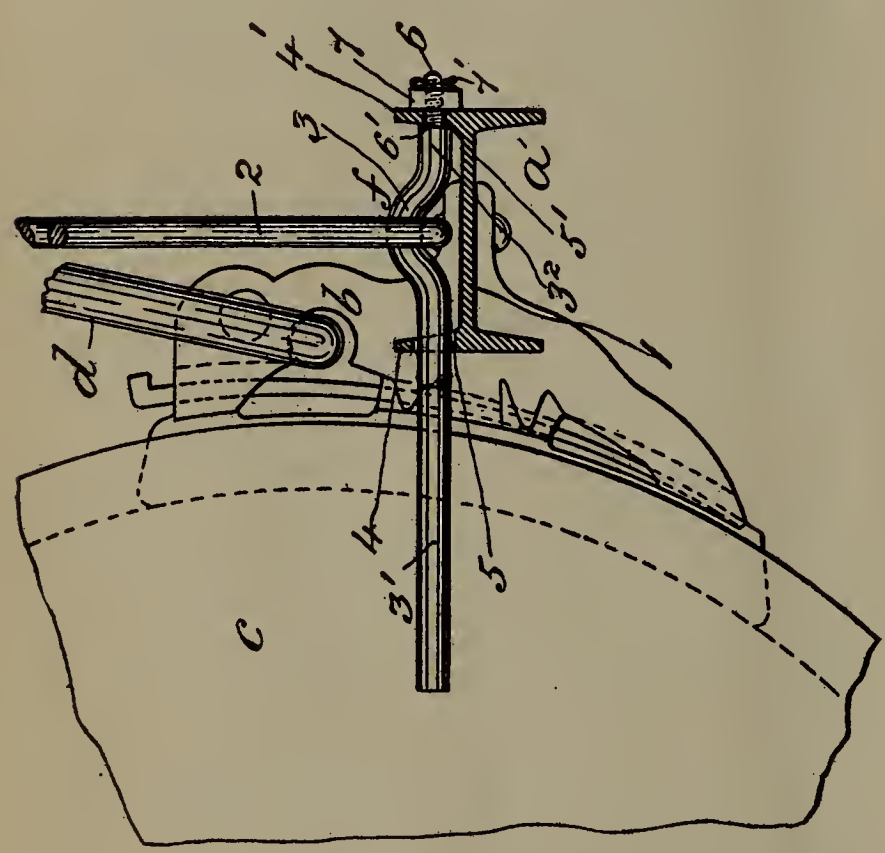

Brake Beam Chain Holder.

Draft-Rigging for Railway Cars.

Charles S. Shallenberger, of St. Louis, Mo., Assignor to Scullin-Gallagher Iron and Steel Co., St. Louis.

976,508. Patented Nov. 22, 1910.

This invention relates to draft rigging, and particularly to the drawbar yokes used in tandem draft riggings. The object of the invention is to provide a yoke that is composed of a number of independent sections which are detachably connected together so that a new section can be substituted for a broken section and thus overcome the necessity of discarding the entire yoke in case any portion thereof breaks. To this end the rear section of the yoke is provided with lips 9a having concaved inner edges which conform to the concave bottom walls of the slots 8a into which said lips project.

Valve Gear.

James G. Blunt, of Schenectady, N. Y.

976,542. Patented Nov. 22, 1910.

This invention more particularly relates to locomotive engine valve gears of the so-called radial type, and its object is to provide a valve gear of such type which, while embodying all the advantages of those now in service, shall attain the additional ones of simplicity and economy of construction and maintenance, requiring only such machine work as can be effected on lathes or boring mills, and, in its practice, of producing positive movement at all points of cut-off, by avoiding the ordinary link block. The illustrations show a side view of the complete valve gear and a detailed view on a larger scale of the operating links. The radius bar 5 is connected directly to the operating rod, thus obviating the lost motion which results from the sliding block and link construction heretofore employed. The point of cut-off is controlled by rocking the reverse shaft 6, which, it will be seen, results in raising or lowering the forward end of the radius bar, the links 4a and 4b permitting this movement. It will be seen that this improved gear is of the well-known Walschaert type, the so-called "link motion," however, being entirely eliminated.

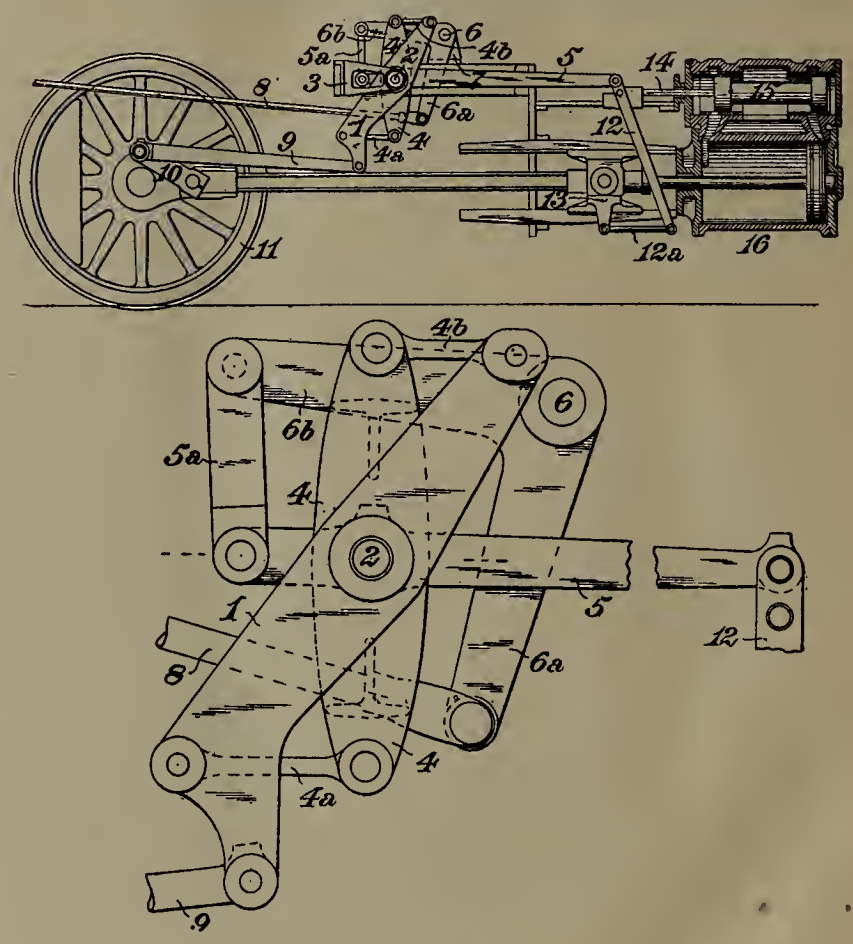

Valve Gear.

RAILWAY MASTER MECHANIC

Established 1878

Published by THE RAILWAY LIST COMPANY

WILLIAM E. MAGRAW, Pres. and Treas.
LYNDON F. WILSON, Editor
O. W. MIDDLETON, Assoc. Editor
WARREN EDWARDS, V. P. & Assoc. Editor
CHAS. S. MYERS, Vice-Pres.
C. C. ZIMMERMAN, Bus. Mgr.
J. M. CROWE, Mgr. Cent. Dist.
J. K. GREENE, Sec.

Office of Publication: 315 Dearborn Street, Chicago
Telephone, Harrison 4948
Eastern Office: 50 Church Street, New York
Telephone Cortlandt 5765
Central Office: House Bldg., Pittsburg, Pa.

A Monthly Railway Journal

Devoted to the interests of railway power, car equipment, shops, machinery and supplies.
Communications on any topic suitable to our columns are solicited.
Subscription price, $2.00 a year; to foreign countries, $2.50, free of postage. Single copies, 20 cents. Advertising rates given on application to the office, by mail or in person.
In remitting make all checks payable to The Railway List Company.
Papers should reach subscribers by the 16th of the month at the latest. Kindly notify us at once of any delay or failure to receive any issue and another copy will be very gladly sent.

Entered as Second-Class Matter June 18, 1895, at the Post Office at Chicago, Illinois, Under Act of March 3 1879.

Vol. XXXV. Chicago, February, 1911 No. 2

CONTENTS.

Editorial—
Federal Locomotive Boiler Inspection 41
Retrospection 42
Why Valve Castings Leak 42
Electric Locomotives for the B. & O. R. R. 43
Stockton Terminal, Chi. Gt. Western R. R. 45
The Proper Procedure 46
Intercepting Valve, Articulated Locomotive 47
Novel German Car Tipping Installation 50
Locomotive Ash Pans 51
Shop Kinks 57
At Springfield Shops, Wabash R. R. 57
Pneumatic Spring Band Stripper 59
Several Operations for Multi-Spindle Drills 60
A Half Truth 61
Mallet Articulated Locomotives, Chi. Gt. Western R. R. .. 62
Practical Application of Lifting Magnets 63
A Suggestion Concerning Side Rod Strains 65
Recent Progress in Air Brake Apparatus 66
General Layout for a Locomotive Repair Plant 69
Present Status of Mechanical Refrigeration 72
Personals 74
Obituary 75
Pump Troubles 75
Among the Manufacturers 76
Hot Saw and Burring Machine 76
The Milburn Light 77
An Automatic Paint Brush 77
New Literature 77
Industrial Notes 78
Recent Railway Mechanical Patents 80
The Foreman's Dream 80

FEDERAL LOCOMOTIVE BOILER INSPECTION.

The agitation for a federal law to cover the inspection of locomotive boilers has at last resulted in the passing of a bill covering the alleged necessities of the case by the upper house of congress. As the bill in its present form does not seem objectionable to either the railways or the labor organizations, it is probable that it will become a law. The objectionable features of the original bill having been eliminated, it would seem that in its present condition it can be of little harm, while the beneficial results will more than usually be dependent upon the capability and diligence of the chief inspector, an appointive position.

Briefly, the provisions are as follows: The application will be upon all railways operating interstate. All steam locomotives must be operated only in a "proper and safe" condition with respect to their boilers and appurtenances, the boilers to be inspected by the railways in accordance with rules to be prescribed. A chief and two assistant inspectors are to be appointed by the President. The chief inspector will divide the country into fifty districts, with an inspector over each district. These inspectors are to be paid $1,800 per year and are selected by competitive examination. Boiler accidents resulting in serious injury or death must be reported to the chief inspector. These reports cannot legally be used as evidence in damage suits. The penalty of violation is $100.

In case the bill is made a law, the moral effect on the small road will in the nature of things be the greatest benefit to the public. Large railways have long enforced inspection rules far superior to any yet applied by the Government in marine inspection. It is possible, moreover, that such a law will be more of a benefit than hindrance to the large railways, in that it will make mechanical department employees to a more or less extent responsible to the Federal Government for neglect of duty. On the other hand, many of the small roads do not operate interstate, and this renders such a law inoperative in the field where its application would be most desirable.

A very wise provision is contained in the clause which makes it illegal to use the information contained in the inspector's reports in prosecuting damage suits. It would appear probable, however, that difficulties would arise in proving the source of information used by plaintiffs to be the reports in question.

At a conservative estimate, there are in operation on railways in the United States about sixty-six thousand locomotives. Of these about forty thousand are owned by twenty-two of our large systems, leaving twenty-six thousand which are divided among upwards of eleven hundred small roads. Taking the total number of locomotives above stated, and dividing the country into fifty districts, with an equal number in each, we find that each of the fifty inspectors is up against the simple proposition of familiarizing himself with the boilers of thirteen hundred and twenty engines, most of them in active duty, and therefore moving over divisions of from eighty to two hundred and fifty miles long. These facts have probably been fully considered, however, and the bill regarded as a step in the right direction.

RETROSPECTION.

It is hard to imagine what would happen if all of our railways should cease operation for a month or even a week. They have become such an important factor in the work of the world that we wonder how people managed to exist without them. Yet their development has covered a period of scarcely more than a hundred years and when it is considered that practically no advance was made in transportation methods during the first eighteen hundred years of the world's history, the results of the past hundred years are remarkable. Indeed this is the one factor which has produced such a marked change in the social and political conditions during the past century. Although steam was first put to practical use in 1773 it was not until the early part of the nineteenth century that it was successfully applied as a means of locomotion. About 1813, George Stephenson built his first "traveling" engine and as the noise of the exhaust frightened horses he was compelled by the officials to muffle it in some way. This he did by passing it through the stack and was delighted to find that it doubled the steaming capacity, which goes to show that sometimes government regulation produces results. Some twelve years later the first railroad, the Stockton & Darlington, was opened with Stephenson as chief engineer, "superintendent of motive power" and locomotive engineer as well. He took the first train over and at times reached the startling speed of twelve miles an hour. It is interesting to note the dimensions of his "Rocket," built a few years later. The total weight of the engine was four and a half tons, the boiler was six feet long, three feet in diameter, with a firebox two feet three inches high, and the cylinders were 8x15 inches, developing about six horsepower. With this machine Stephenson was able to make thirty miles an hour in a spurt and this on a poorly constructed track of wooden rails.

Although four locomotives were brought over from England to this country in 1828 but one was ever used and that but once or twice. The first locomotive built in this country was finished in 1830 and on its first trip one of the wheels was so weak that it was sprung, throwing the engine in the ditch. A few months later a negro fireman thought to prevent the waste of steam by sitting on the safety valve and as a result the boiler blew up, killing the fireman and injuring the engineer. About this same time Cooper built his "Tom Thumb" and it seems that he had trouble with his boiler tubes because he couldn't get any pipe and had to use musket barrels. He also discovered the advantage of forced draft and used a bellows worked by a belt from the axle. It is stated that the "Tom Thumb" with a 3¼x24½-inch cylinder pulled four and a half tons up an eighteen-foot grade at twelve miles an hour, and this performance induced the directors of America's first practical railroad, the Baltimore & Ohio, to offer special prizes for the most improved locomotive to be delivered to them before June 1, 1831. On the return trial trip the "Tom Thumb" entered into a race with a crack horse and car belonging to the stage line and had practically defeated the horse when the blower belt slipped off. Of course the steam went down and the horse finally humiliated the "Tom Thumb" by winning the race.

Although railway motive power men still have their troubles it is a source of satisfaction to think of what has been done since those early days and that progress has steadily been made in the direction of efficiency. Perhaps our railways could be run still more efficiently but progress takes time and the year 1911 will show its share of problems solved.

WHY VALVE CASTINGS LEAK.

The leakage of valve castings when tested by pressure is one of the exasperating difficulties of valve manufacturers, says the "Brass World." When good steam metal is used for the mixture, the leakage may run all the way from 3 or 4 per cent in the best managed establishments, up to 15 or 20 per cent in those not so well conducted. It is always a factor of uncertainty, and consequently annoying.

There are several causes which may result in the leakage of steam metal valve castings:

1. The metal mixture. The presence of too much zinc is a detriment, as it produces dross on the melted metal. Aluminum is a very flagrant cause of leakage, and when scrap is used, this metal is apt to creep in.

2. The sulphurizing of the metal. When the fuel used for melting contains an excess of sulphur, the metal absorbs it. Sulphurized metal is always dirty, and the dirt or dross becomes entangled in the molten metal, remains there when it sets, and thus forms a channel through which liquids or air may pass when pressure is applied.

3. Blowholes in the castings. Overheating metal or allowing it to remain in the furnace for some time after it has been melted, causes gas absorption with the accompanying blowholes. Pinholes are small blowholes. These cavities allow water or steam to pass, and the valves therefore leak.

4. Use of too short a gate or runner in casting. In casting steam metal there is always a certain quantity of dross formed. If it passes into the casting on account of the shortness of the gate or runner, leakage results. Owing to the desire of valve makers to have as little scrap as possible, the patterns are often made with shorter gates and runners than is admissible for good practice. It is quite a frequent source of leakage in valve castings.

5. Too thin walls in the valve. While not an intentional error on the part of the valve maker, it frequently happens that the corebox is not properly made, or not well set in the mould. The result is a casting with one thick side, while the other is quite thin.

6. Use of inferior scrap. While the scrap may be of the right mixture, its conditions will often cause leakage. For example, chips alone are unsuited for melting, as they oxidise to such an extent that the metal becomes filled with dross. To use them, they should be melted and first run into ingots. If this is not done, a certain percentage only should be employed. The best results, however, are obtained by first running into ingots.

7. Pouring metal too cold. When steam metal is not poured at a sufficiently high temperature, the film of oxide which always forms upon exposure to the air becomes entangled in the metal and remains there. The casting may then have a good appearance, and the oxide be invisible to the naked eye; but nevertheless, it forms a channel through the metal to cause leakage. When the metal is poured at a suitable temperature, the zinc burns on the surface of the stream, and apparently acts as a reducing agent, for there is then no film which forms to become entangled.

Pouring the metal too cold is probably the chief cause of leakage in steam metal valve castings. The use of too short a gate or runner undoubtedly is the next in importance.

Electric Locomotives for the Baltimore & Ohio R. R.

During the present year the service on the Baltimore belt line of the Baltimore & Ohio Railroad has required the addition of the two electric locomotives which are illustrated and described in this article. The locomotives were designed and equipped by the General Electric Company, the mechanical portion being furnished by the American Locomotive Company. The complete locomotive as shown herewith is similar to that built for the Detroit River Tunnel Company, but differs from it in details and is the first of this type to be used on the Baltimore & Ohio. The cab resembles the type which has been widely used for switching locomotives on interurban electric railways, while the trucks and running gear are suitable for the severe duty demanded in trunk line service.

The running gear is articulated and consists of two four-wheeled trucks connected through a massive hinge which allows the two trucks to support and guide one another without interfering with the lateral flexibility required in curving with a long wheel base. The framing is massive and the sections are heavier than actually required for mechanical strength on account of the necessity of obtaining ample weight for tractive effort. The side frames are steel castings 5 in. thick, bolted together through steel end frames and bolster castings of a box girder pattern. Draft gear and buffers are carried on the outer end frames. The wheels are steel tired, 50 in. in diameter, with the motor gears mounted directly on extensions of the wheel hubs. The journal boxes are of cast steel and are carried in pedestal jaws between shoes 9 in. wide and have journal bearings 7½ in. x 14 in.

Fig. 1.—Locomotive for the Baltimore & Ohio.

The weight of the locomotive is carried on the boxes through semi-elliptic journal box springs equalized together to obtain the most uniform possible distribution of weight over groups of springs. This construction concentrates the principal hauling and buffing strains in the trucks themselves and relieves the platform and cab of all stresses except those due to its own weight and that of the control and operating apparatus mounted on it.

The cab platform is 38 ft. 6 in. in overall length. It is carried upon side bearings on the two tracks, and upon two center pins, one of which has a slight longitudinal sliding motion in order to accommodate the variation in center pin distance due to curving.

The platform is built up of 10-in. longitudinal sills 34 ft. 1 in. in length and riveted to 10-in. sills. The body bolsters are built up of 1-in. x 12-in. plates to which are riveted the center pin castings referred to above. A cover plate below the two center sills forms, with the floor above, an enclosed air space which serves for distributing air from the blower located in the center of the main cab for forced ventilation of the motors. The whole platform is braced and squared by heavy floor plates extending the whole width of the platform and riveted to side sills and end sills.

The cab consists of a main operating cab located in the center of the platform and sloping auxiliary end cabs extending toward the ends of the locomotive. A series of interior illustrations are presented to show the study that has been expended on the location and arrangement of apparatus and wiring.

The drawing shows the arrangement of the principal pieces of apparatus as arranged for the Detroit locomotive and followed for the Baltimore machines. The auxiliary cabs are 6 ft. in width and contain parts of the apparatus which are not subject to inspection and repairs. In the outer end of this cab are located the main air reservoir and sand boxes for sanding the leading wheels. The rheostats come next on the floor of the cab. Perforated side sheets allow a circulation of air through and around these rheostats for ventilation. The upper part of these side sheets is hinged and held with spring locked buttons to permit the convenient inspection of rheostats and wiring. The end cab is held to the platform and main cab by means of bolts, but for major repairs these can be removed and the end cab completely removed from the locomotive to give access to all the apparatus contained in it.

The contactors are located in the auxiliary cab, but stand in a bank facing the main cab. During operation these contactors are inclosed by asbestos-lined folding doors which shut them off from the main operating cab, as shown in several of the succeeding views. The space on either side of the auxiliary cab is devoted to a platform running from the main cab to the ends of the locomotive, permitting, on one side, access from the main cab to the coupler, and, upon the other side, affording an uninterrupted view for the operating engineer.

Turning now to the main operating cab, it will be noted from the views of the interior that all wiring is in conduit. Even the bell and whistle ropes are drawn through pipes,

Fig. 2.—View from Engineer's Seat, B. & O. Locomotive.

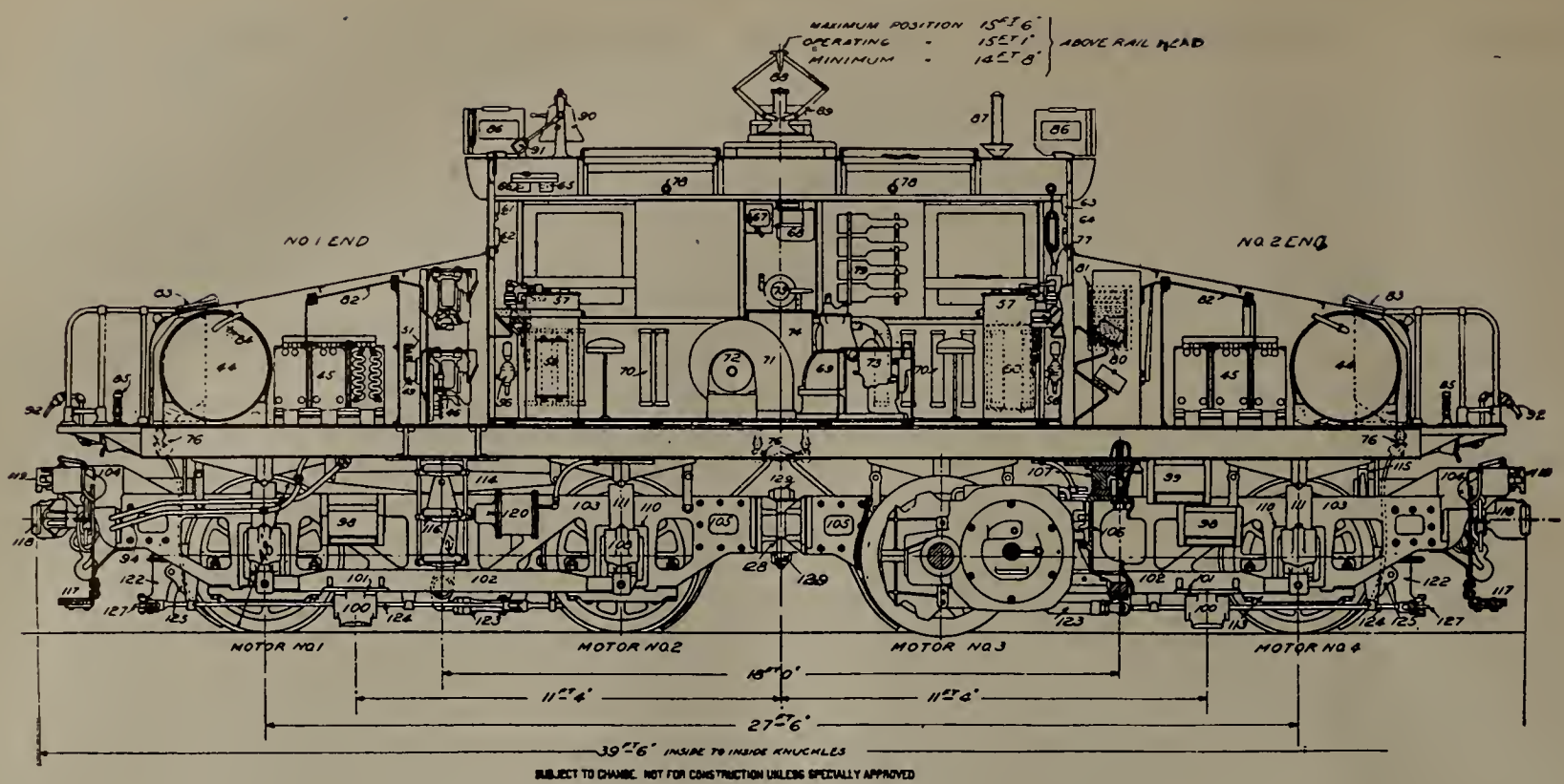

Fig. 3.—Elevation Showing Arrangement of Apparatus.

both for protection and for conformity in appearance with the rest of the piping and wiring. The central piece of apparatus in the cab is the air compressor. This is a CP-26 compound compressor, motor-driven, with a capacity of 100 cu. ft. piston displacement per minute when pumping against 130 lb. reservoir pressure. The center of the main cab is the most feasible point for locating the compressor as it permits the various items which may require attention, such as valves, piston rings, brushes, etc., to be accessible from every side. In passing from the low pressure to the high pressure cylinder, the air is carried by a 2-in. pipe to the roof of the cab and through about 35 ft. of pipe lying on the roof in order to provide the radiating surface necessary to reduce the temperature of the air before entering the high pressure cylinders. A similar length of radiating pipe is inserted between the high pressure cylinder and the main reservoir for the same purpose. The compressor is controlled by an electro-pneumatic governor mounted on the A side of the cab and arranged for maintaining the reservoir pressure between the limits of 120 lb. and 130 lb.

A fan for forced ventilation of motors is placed beside the compressor. This fan delivers air into the enclosed space or distributing chambers previously described. The air from this distributing chamber is carried through branch pipes to the motor. Against the side walls of the cab are mounted racks for paddles and flags, and electric coil heaters for heating in the cab. Sand boxes for sanding the track in front of the rear truck are also placed in the middle of the side walls. They are operated from the engineer's position simultaneously with the forward sand boxes in the auxiliary cabs.

The control is in duplicate at the two opposite ends of the cab, and consists of the master controller, air brake valves, air gages and ammeters. The handles for bell and whistle ropes, the switches for headlights and valves for sanders are also within convenient reach.

One of the great advantages of this sloping cab and open side platform design is that the engineer's window is about 12 ft. back from the front end of the locomotive. This arrangement affords protection in case of collision and buffing accidents, while giving the engineer a view which is practically as comprehensive as if he were at the extreme front end of the locomotive.

The motor equipment consists of four GE-209 motors. Each motor is furnished with twin gearing, a pinion being mounted on each end of the armature shaft and a corresponding gear on each driving wheel. With absolute alignment of the armature shaft and axle insured, the strains on the gear teeth are reduced to a minimum. The motor is a 600-volt commutating type. The equipment of four motors can exert a tractive effort of 46,000 lb. at 14 m. p. h., which is the theoretical slipping point of the wheels, assuming a coefficient of adhesion of 25 per cent.

To obtain some idea of the power of these locomotives, they may be compared with the heaviest types of steam passenger locomotives. The Baltimore & Ohio electric locomotives weigh 90 tons on drivers. The weight on the drivers of the Pacific type of steam locomotives, which is the type used for heavy passenger service, very rarely exceeds 75 tons. A weight of 90 tons to 100 tons on drivers is obtained only on freight locomotives of the Consolidation and Mikado types. The weight on drivers, which determines the maximum pulling power of the electric locomotives, is therefore comparable with the heaviest types of steam locomotives for freight service.

In the steam locomotive, however, on account of boiler

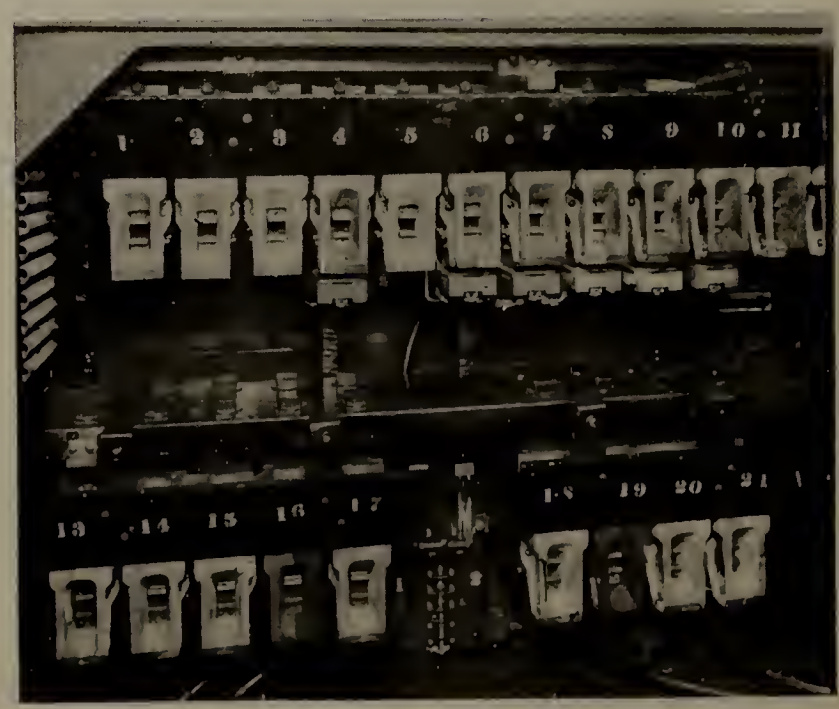

Fig. 4.—No. 1 End Contractors, B. & O. Locomotive.

limitations, it is impossible to carry the maximum tractive effort at speeds higher than 8 m. p. h. or 10 m. p. h., while the electric locomotive will develop its maximum tractive effort at 14 m. p. h. This tractive effort of 46,000 lb. at 14 m. p. h. corresponds to an output of 1,700 hp. The electric locomotive, however, is more flexible and has a greater power than indicated by these figures. By means of the multiple used for heavy passenger service, rarely exceeds 75 tons. A unit control, which is a feature of these locomotives, two of these 90-ton units can be coupled together and operated by one engineer in the forward cab. All the motors are controlled simultaneously by one operating handle, and one engineer thus has under his control a maximum capacity of 3,400 hp. or a maximum tractive effort of 90,000 lb. developed from one 180-ton locomotive.

It might be noted that 180 tons represent approximately the weight of a single large steam locomotive and its tender, and that in the steam locomotive only half this weight is on drivers, while in the electric type the whole 180 tons is on drivers and is capable of being applied for developing tractive effort. With a light passenger train, a single 90-ton electric locomotive will develop speeds of 25 m. p. h. to 35 m. p. h. on the level. The new locomotive is therefore an engine capable of handling the heaviest freight trains over the tunnel grades or the highest speed passenger trains at the greatest speed consistent with its tunnel service.

The following table gives the principal dimensions of the new locomotive:

Number of motors	4
Gear ratio	3.25
Number of driving wheels	8
Diameter of driving wheels	50 in.
Total wheelbase	27 ft. 6 in.
Rigid wheelbase	9 ft. 6 in.
Length inside knuckle	39 ft. 6 in.
Length of main cab	15 ft. 6 in.
Length of cab overall	33 ft. 6 in.
Total weight	184,000 lbs.
Tractive effort at 25 per cent coefficient	46,000 lb.
Speed at maximum tractive effort	14 m. p. h.

Stockton Terminal, Chicago Great Western R. R.

Recent legislation, which has limited the hours of service of train employes, has made it necessary to rearrange some of the division terminals of the Chicago Great Western R. R. The old arrangement of terminals on the eastern division made Dubuque, which is 175 miles from Chicago and 70 miles from Oelwein, the intermediate point. As this arrangement made one portion of the division more than twice as long as the other, and as it was found that the grades east of Stockton could be reduced to a maximum of .7 per cent, while the grades west of Stockton, maximum of which being 1 per cent, could not be easily reduced, it was decided to make the division point at Stockton, Ill., and use a standard consolidation engine, with a tractive power of 46,600 pounds, to handle the same trains east of Stockton that the standard Mallet engine, with a tractive power of 81,000 pounds, would handle west of Stockton.

During the past year the new terminal has been constructed and was occupied January 15th.

This terminal provides for a system of yard tracks, repair tracks, engine terminal tracks, a 12-stall roundhouse, 100 feet in depth, two stalls of which are set aside for boiler room, machine shop and engine room, store room, engineers' room, and roundhouse foreman's office; a 90-ft. steel turntable and concrete pit, operated electrically by a Nichols tractor; 100-ton concrete link-belt coaling station, operated electrically and equipped with scales for weighing coal delivered to locomotives; sand house, with sand storage; oil house; 100,000-gallon steel water tank; modern concrete cinder pit, operated by means of a locomotive crane; a rest house for trainmen; and a train dispatcher's and yardmaster's office.

The roundhouse is equipped with a modern washout and heating system and an electric plant for power and lighting purposes.

The general layout of the yard tracks, the details of the roundhouse, oil house and the general plan of the heating and washout system is shown in the accompanying illustrations.

The turntable is operated, as stated above, by an electric tractor manufactured by the well known firm, Geo. P. Nichols & Bro., Chicago. This tractor was ordered from standard specifications.

The heating system, which is of the hot-blast type, was installed by the Massachuetts Fan Co., First National Bank building, Chicago.

The washout system was installed by the Cowles-MacDowell Engineering Co., McCormick Building, Chicago, and connections have been installed between each of the pits, so that one set of connections serves two pits.

The power plant consists of two 150-h. p. return tubular boilers installed by the Erie City Iron Works. Electricity for lights and for operating the turntable, coal shed and machine shop is furnished by two direct connected 35-k.w. D. C. generators, directly connected to simple high speed Ideal engines.

The oil house is equipped with tanks and pumps installed

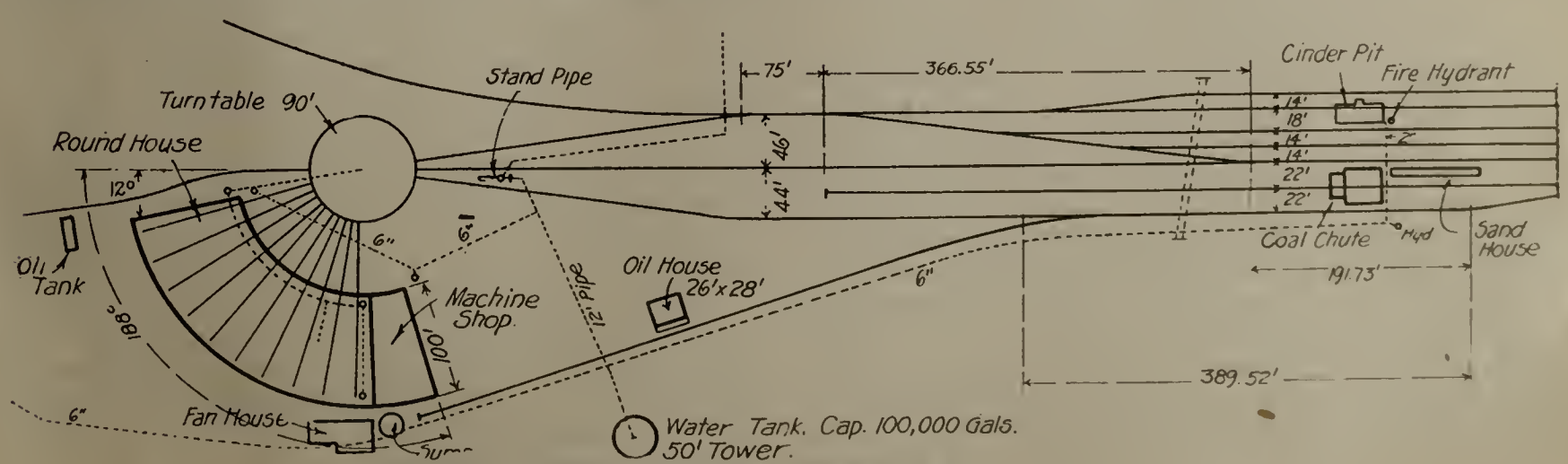

Stockton Terminal, Chicago Great Western R. R.

by the S. F. Bowser Co., of Ft. Wayne, Ind. This equipment deserves considerable explanation, as it is well adapted to hundreds of small division terminals of this type.

Oil House.

This system proves to be not only a great convenience but a source of profit, from the very fact that the waste of oil so common with the air pressure and faucet systems is entirely eliminated, for with ordinary care in handling oils with the Bowser system, it is not possible for waste to occur, besides which the ease and dispatch by which oils can be transferred into storage tanks, also the quickness by which the oils can be delivered over the delivery counter, means a very great saving. The equipment in question consists of two cylindrical and five rectangular tanks, all constructed of heavy steel plates, representing a total storage of about 13,500 gallons. The oils stored are fuel, gasolene, car, headlight, engine, valve and signal car. With the exception of the gasolene tanks, which are buried outside, and the fuel tank, which is placed underground near the roundhouse, with the pump inside of the building, all the other tanks are placed in the basement and connected with the Bowser standard long-distance self-measuring pumps in the storeroom above, which are shown in one of the illustrations. The pumps are placed as near the delivery counter as possible. The pump for the gasolene tank is placed on the outside nearest the wall and connected with the tank, which is buried outside. This class of fluid can be handled without any danger whatever in the storeroom, providing, of course, that the ordinary precautions are taken.

All the Bowser pumps are supplied with a lock and key, the latter being in charge of the storeroom attendant, and the pumps can be kept locked and no one except those authorized can draw any oil without the attendant's authority. By this means the gasolene pump is always kept locked and, as we have said before, there is no danger whatever in handling this class of oil in the storeroom.

Stockton Terminal from Coaling Station.

Provision is made so that the tanks for fuel, engine, car and headlight oils can be filled from the outside direct from tank cars. At the same time provision is made so that all of the tanks, with the exception of the fuel and gasolene, can be filled from the storeroom. This is accomplished by placing the barrels on one of the Bowser barrel skids and strainer, where it is wheeled over the fill box for which it is intended. The bung of the barrel is removed and the oil is transferred to the storage tank without a drop being wasted.

One of the photographic reproductions shown herewith, taken shortly before the completion of the terminal, gives a birdseye view from the top of the coaling station and shows the amount of filling which has been done. The location of

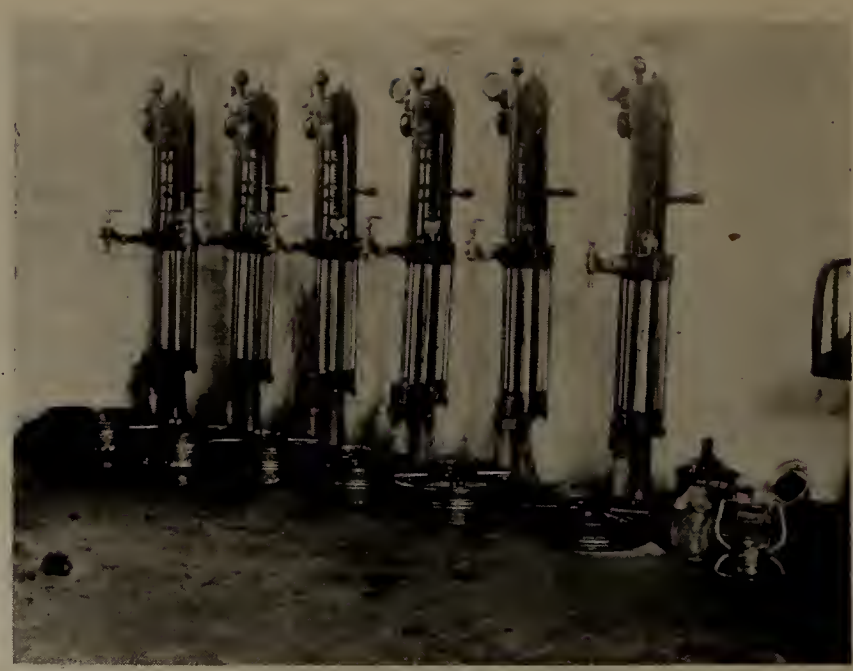

Bowser Oil Pumps at Stockton.

the oil house is shown by the tanks midway between the round house and water tower. The track at the right leads to the main line and Stockton, about a mile and a half distant, and at present it is rather inconvenient for the men to get to town, so the rest house is pretty well crowded. The company owns a large tract of land in the vicinity and there is plenty of room for expansion; in fact, it does not seem improbable that the capacity of the roundhouse will have to be doubled inside of another year. A noticeable feature of the roundhouse is the ease with which it takes the Mallets in use on this road, although they are not of the largest type. The roundhouse is being efficiently taken care of by Locomotive Foreman W. H. Murray.

We are indebted to Mr. J. G. Neuffer, superintendent of motive power of the Chicago Great Western R. R., for most of the above information.

THE PROPER PROCEDURE.

On one of our western roads some years ago especial attention was being paid to the use of oil on locomotives, and in an effort to cut down the consumption, the engine men were required to give detailed reports on the amounts used on each run. Naturally the men grew to be very economical in the use of oil. One day a bright young fireman came up for examination for promotion to the other side of the cab. Among other questions, the examiner asked him how much oil he would use on say a hundred and fifty mile run, and he replied about a pint and a half. The examiner thought it a little high, but he was passed on this section. He was then given the questions on train dispatching and passed them satisfactorily. Finally he came to the "supposition" cases and was asked, "Say you are running south on a single track road with clear orders and in the same block is a train which, through error, is running against you. You are coming down a grade when the other headlight flashes up in front of you. What would you do?"

The young man thought carefully for a few minutes and finally said: "I'd shut her off, open her pet-cocks and throw her over, then I'd give her steam, call for the brakes, grab the two oil cans and jump."

The Corning Draft Gear Co., Hammond, Ind., has been incorporated with $150,000 capital stock. The company will manufacture iron and steel specialties, devices used by railroads, draft gears, etc. The company's Chicago office is located at 206 Fisher building.

Intercepting Valve of the Articulated Locomotive

Among the distinctive features of the American articulated compound locomotive, practically the only ones which enter into operation are the intercepting valve, the power reversing gear, and the by-pass valves. The intercepting valve is identical in principle with that used on the well-known two-cylinder cross-compound locomotives built by the American Locomotive Co., commonly known as the Richmond Compound, differing from the latter only in certain modifications of the design which the use of four cylinders instead of two necessitated. Engineers, therefore, who have operated the two-cylinder cross-compound of this build, will be perfectly familiar with the construction and operation of the intercepting valve as applied to the American articulated compound locomotive.

This valve is located in the saddle of the left high pressure cylinder, to the left of the vertical and above the horizontal center line of the cylinders. It consists, in reality, of three valves, viz., the intercepting valve, the reducing valve or sleeve, and the emergency or high pressure exhaust valve.

This valve shuts off, at the proper time, communication between the receiver and the high pressure cylinders; to prevent the pressure in the receiver backing up against the high pressure pistons, when the locomotive is working with live steam in all four cylinders.

The reducing valve or sleeve fits on the stem of the intercepting valve, along which it is free to slide longitudinally. Its duty is three-fold:

First, to close the intercepting valve in starting and when the locomotive is changed from compound to simple working;

Second, to let live steam from the boiler into the receiver and low pressure steam chests in starting and when the locomotive is working simple;

Third, to regulate the supply of this live steam and keep its pressure at a predetermined amount.

The emergency or high pressure exhaust valve, which is located at one of the other ends of the intercepting valve chamber, is the device which makes it possible to change the locomotive from compound to simple working (that is, using live steam in all four cylinders).

A wrought iron pipe leads from the emergency valve chamber along the left side of the locomotive to an elbow at the rear of the main exhaust pipe. This elbow connects with a passage surrounding the main exhaust opening.

When the locomotive is changed into simple working, the emergency valve is opened, which allows the exhaust steam from the high pressure cylinders to pass through the wrought iron pipe to the exhaust pipe in the smoke box and to the atmosphere.

Opening of the emergency valve is accomplished by opening the emergency operating valve. When the emergency operating valve is closed (or, in other words, when the locomotive is working compound), the handle of the valve points forward. To open the emergency operating valve and change the locomotive into simple, the handle must be turned so as to point backward. The opening and closing of the emergency valve is thus under the control of the engineer.

It is important to bear in mind that the emergency valve, as its name indicates, should ordinarily be used only when the locomotive cannot otherwise move the train; and, as soon as a speed of three to four miles per hour has been attained, the locomotive should be changed back to compound.

Except for changing the locomotive into simple, the movements of all the parts of the intercepting valve are automatic.

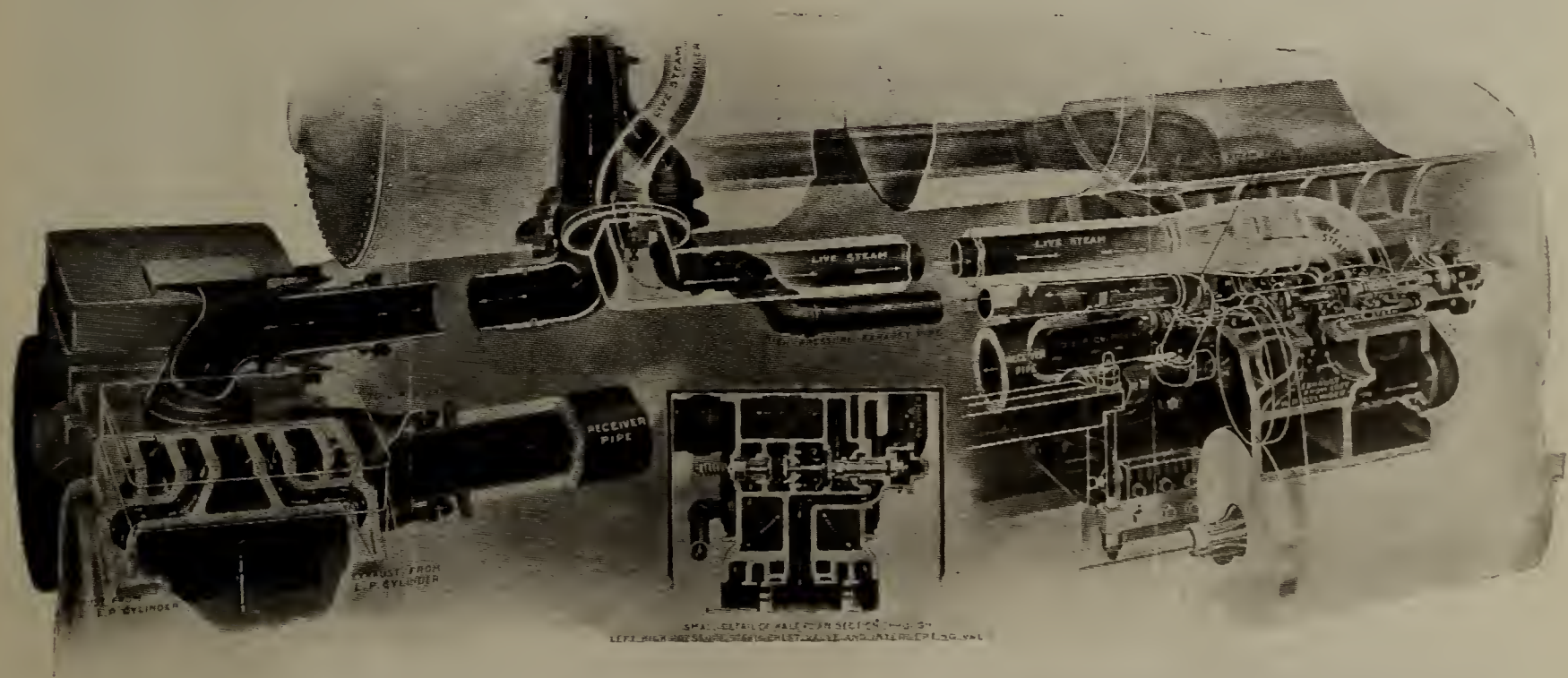

Fig. 1.—Position of Intercepting Valve a Moment After Throttle is Opened When Locomotive is Started in Ordinary Way.

The illustrations show the entire mechanism assembled, and the arrangement of the various steam pipes and passages. These illustrations also give the intercepting valve in its four different positions; namely:

First, the moment after the throttle is open when starting in the ordinary way, the reducing valve (1) being open and the intercepting valve (2) and the emergency valve (6), closed;

Second, at the time when the predetermined pressure has been reached in the receiver pipe, when the reducing valve (1) is closed and the other parts remain in the same position as in Fig. 1;

Third, in the compound position, when the intercepting valve (2) is open and the reducing valve (1) and the emergency valve 6 are closed;

Fourth, in simple position, when the emergency or high pressure exhaust valve (6) and the reducing valve (1) are open, and the intercepting valve (2) is closed.

In the illustrations, the course of the steam is indicated by arrows. These illustrations help to make clear the explanation of the principle and operation of the American system of compounding which follows.

As will be seen from the illustration, the reducing valve (1) is so fitted on the stem of the intercepting valve (2) that when the former opens, it closes the latter, and vice versa. The reducing valve, however, can be closed without opening the intercepting valve.

Operation of the Intercepting Valve

Live steam from the boiler is, as indicated by the arrows, always admitted through the cored passages in the cylinder casting to the chamber (A) formed in the intercepting valve chamber head (4) and surrounding the reducing valve (1). Chamber (C) communicates with the receiver pipe or steam passage to the low pressure cylinders, and chamber (F) connects directly with the exhaust passages from the high pressure cylinders. The chamber (L) communicates with chamber (M) through the emergency or high pressure exhaust valve (6). The latter chamber is connected with the exhaust pipe in the smoke box, as previously explained.

With the intercepting valve in the position shown in Fig. 1, steam from the boiler, following the course of the arrows, flows through the passage in the left high pressure cylinder to chamber (A) and acting against the shoulder (E) of the reducing valve (1), has forced this valve open or inward, closing the intercepting valve (2) and uncovering the ports (B). This allows live steam to pass into the chamber (C), and thence into the receiver and to the low pressure steam chests and cylinders. Live steam, at the same time, passes through the high pressure valves into the high pressure cylinders in the ordinary way. The intercepting valve (2) being closed, communication between the exhaust passage (F) from the high pressure cylinders and the chamber (C) is cut off. This thus prevents the pressure in this latter chamber from backing up against the exhaust side of the high pressure pistons; and, consequently, these start free from back pressure; while, at the same time, the low pressure cylinders are being supplied with steam direct from the boiler. The pressure of this steam is so regulated by the reducing valve (1) that it bears the same relation to the boiler pressure as the high pressure piston areas bear to the low pressure piston areas, thus making the work in all four cylinders equal (the high and low pressure cylinders having the same length of stroke). For instance, if the area of the low pressure cylinder is two and one-half times the area of the high pressure cylinder, then the reducing valve (1) would be so designed as to reduce the pressure of the live steam admitted by it to chamber (C), to 1÷2.5 or 40 per cent of the boiler pressure.

From the above, it will be seen that the locomotive automatically starts with live steam in all four cylinders, or in other words, as a single expansion engine.

Piston (3) and the chamber (H) in the outer end of the intercepting valve chamber head (4) constitute simply an air dash-pot, to prevent slamming of the valves when changing from compound to simple when running.

Figure 2 represents the intercepting valve at the moment when the predetermined maximum pressure in the low pressure steam chests is reached. In this case, it will be noticed that the positions of the valves are the same as in Fig. 1, except that the reducing valve (1) has been moved out, closing the ports (B) thus cutting off the supply of live steam to the chamber (C), and to the low pressure steam chests; until by the movement of the low pressure pistons the pressure in that chamber has been lowered to the required amount.

The reducing valve (1) automatically keeps the pressure in the chamber (C) down to the desired amount because of the fact that the area of the shoulder (E) is, as previously stated, usually 1÷2.5 or 40 per cent of the area of the end (D) of the valve. Consequently, when the pressure in the chamber (C) exceeds 40 per cent of the boiler pressure, it will overcome the force of the steam at boiler pressure, acting on the shoulder (E); and move the reducing valve (1) outward, closing ports (B).

The intercepting valve automatically assumes the position Fig. 3, the compound position, after one or two revolutions of the driving wheels. In this position, the intercepting valve (2) is opened, allowing the exhaust steam from the high pressure cylinders to pass into the chamber (C), and so to the receiver and the low pressure cylinders. The opening of the intercepting valve (2) has closed the reducing valve (1), which thus cuts off the supply of live steam to the chamber (C) and receiver.

The principle by which these movements are automatically performed may need explanation. The exhaust steam from the high pressure cylinders in the chamber (F) acting against the inner face of the intercepting valve (2) and also against the inner end of the intercepting valve stem (being admitted to the chamber (L) through the holes in the unbalancing valve (5)), tends to open the intercepting valve (2). This force is resisted by the pressure on the outer face of the intercepting valve (2), the pressure on the outer and inner faces of the unbalancing valve (5) being balanced. The combined areas of the face of the intercepting valve (2) and the end of its stem are greater than the area of the outer face of the valve. Thus steam in the chamber (F) at a low pressure acting against this larger area overcomes the resistance of the higher pressure steam in chamber (C) and forces the valve into the position shown. This principle is the same as in the case of the reducing valve previously explained.

These areas are usually so proportioned that when the pressure in the chamber (F) is 30 per cent of the boiler pressure, it overcomes the resistance of the steam in the chamber (C) at a pressure of 40 per cent of boiler pressure.

As will be seen from the above, when the locomotive is working compound the low pressure steam chests receive all of their steam from the exhaust from the high pressure cylinders through chambers (F) and (C) and the receiver, the ports (B) having been closed by the outward movement of the intercepting valve (2). At full stroke, the pressure on the low pressure pistons would be, approximately, 30 per cent of the boiler pressure; while, on the high pressure pistons, would be exerted the pressure which the live steam from the boiler has, minus the 30 per cent in the receiver which acts on their exhaust sides. The pull on the cross heads of all four cylinders is practically equal, as the products of the several piston areas multiplied by their respective pressures are equal in each case.

Should the maximum power of the locomotive be required in starting or in ascending a heavy grade, it may be had at any time by simply turning the emergency operating valve (N) in the cab so that the handle points to the rear. The intercepting valve will then assume the position shown in Fig. 4.

Opening the emergency operating valve admits live steam into the chamber (G) which forces the emergency valve (6) open against the resistance of its own spring plug the pressure of the steam in the chamber (L) (which is receiver pressure).

On the opening of the emergency exhaust valve (6), the

steam in the chamber (L) is immediately released. This unbalances the intercepting valve (2) with the result that the reducing valve (1) is moved inward or opened by the pressure of the steam from the boiler in chamber (A) acting against the shoulder (E). The reducing valve (1) carries the intercepting valve (2) inward with it, closing the latter, the two valves assuming the position shown in Fig. 4. Communication between the chamber (C) and the chamber (F), into which the steam from the high pressure cylinders exhausts, is thus cut off; while live steam from the boiler, at a pressure reduced to about 40 per cent of the boiler pressure, is allowed to pass through the ports (B) into the chamber (C) and thence through the receiver to the low pressure steam chests.

By the use of the intermediate chamber (L) between the chamber (F) and the emergency valve (6), which is exhausted the instant that valve is opened, the intercepting valve (2) is closed and the reducing valve (1) opened before, or at the same moment that the receiver is actually exhausted. Consequently, there is no drop of pressure in the low pressure steam chests during the change from compound to simple or prior to the entrance of live steam into the low pressure steam chests.

As the emergency exhaust valve (6) is kept open by the pressure of the steam admitted to the outer side of the piston (8) by the opening of the emergency operating valve in the cab, the exhaust steam from the high pressure cylinders passes through the chamber (F) into the chambers (L) and (M), and so into the high pressure exhaust pipe and to the atmosphere.

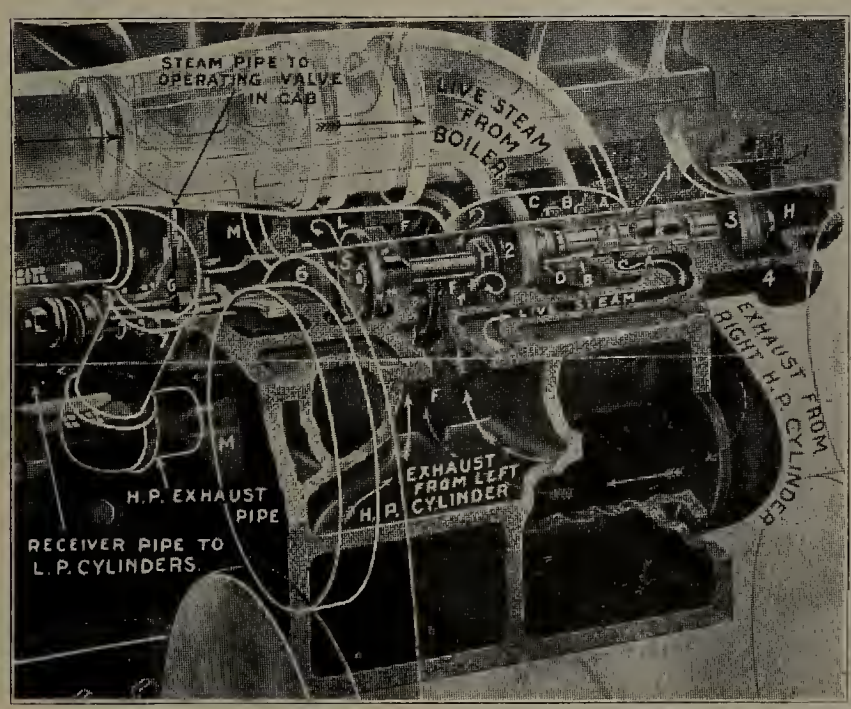

Fig. 2.—Position of Intercepting Valve When Predetermined Pressure in Receiver Pipe Has Been Reached.

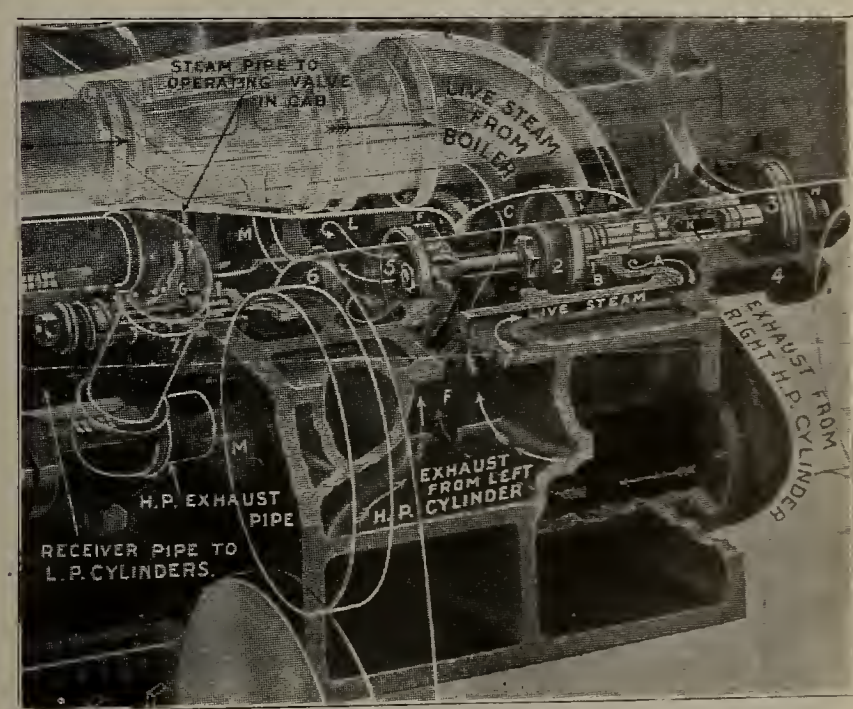

Fig. 3.—Intercepting Valve in Compound Position.

Thus when the intercepting valve is in position Fig. 4, that is when the locomotive is working simple, the high pressure pistons are relieved of the back pressure amounting to 30 per cent of the boiler pressure, which acts against them when the locomotive is working compound, with the intercepting valve in position Fig. 3. On the other hand, the low pressure cylinders are receiving steam direct from the boiler at a pressure of 40 per cent of that which it has in the boiler, instead of exhaust steam from the high pressure cylinders at a pressure of only 30 per cent of boiler pressure as when the locomotive is working compound. This explains the 20 per cent increase in the normal maximum power, which, as already stated, is obtained by changing the locomotive into simple. The increase would be greater, were it not for the wire-drawing of the steam through the restricted area of the ports (B), which are intentionally reduced for operation under this condition. As it is, the actual increase in power at speeds of from three to four miles per hour would not be greater than the amount given above.

The reducing valve (1) is so designed that at speeds of more than three or four miles an hour no increase in power is obtained by changing the locomotive into simple. This is done in order that the emergency feature will not be misused, with injurious effect on the machinery and the sacrifice of economy in fuel consumption.

If the pressure in the chamber (C) and consequently in the receiver pipe and the low pressure steam chests rises to more than 40 per cent of the boiler pressure when the engine is working simple, the reducing valve (1) will be forced outward to the position it has in Fig. 2, that is, closing the ports (B) and shutting off the live steam from the chamber (C). The other parts of the valve, however, will remain in the same position as shown in Fig. 4. The reducing valve (1) automatically closes under the conditions above stated.

Upon the movement of the low pressure pistons, the steam pressure in the chamber (C) will be reduced; and the boiler pressure acting upon the small shoulder (E) would again force the reducing valve (1) inward to its position in Fig. 4, opening the ports (B). Thus the pressure in the chamber (C) and low pressure steam chests would be again raised to the required 40 per cent of the boiler pressure. This alternate opening and closing of the reducing valve (1) will continue as long as the displacement of the low pressure pistons does not exceed the supply of steam that comes through the ports (B). When this condition occurs, the reducing valve (1) will remain open.

These facts explain why, if the locomotive starts to slip when it is changed into simple, it automatically ceases without necessitating closing the throttle: since, with the rapid movement of the low pressure pistons the power of those engines is reduced; and, with the increased exhaust from the high pressure engines passing through the comparatively restricted opening of the emergency valve (6), the back pressure on the high pressure pistons is increased, reducing the effective power in those cylinders.

It is very important for the engineer to remember that, the locomotive having been changed into simple working by opening the emergency operating valve (N) in the cab, it is necessary to close this valve (that is, turn it so that the handle points forward), in order to change the locomotive back to compound or normal working. With the emer-

gency operating valve closed, the steam will be exhausted from the chamber (G) in front of the piston (8). The tension of the spring assisted by the steam pressure upon the inner end of the emergency exhaust valve (6) will then return that valve to its seat, thus preventing the exhaust steam from the high pressure cylinders escaping to the stack. A few exhausts from the high pressure cylinders will, then, soon raise the pressure in the chamber (F), and force the intercepting valve (2), and with it the reducing valve (1) to assume the compound position, as shown in Fig. 3.

If, upon starting the locomotive, it is desired to prevent the valves from changing automatically to the compound position, the emergency valve (6) may be opened in advance by opening the emergency operating valve (N), turning the handle to the rear. This, as previously explained, will prevent the pressure in the chamber (F) from rising sufficiently to force the intercepting valve (2) open.

In changing from compound to simple when running, the sudden unbalancing of the intercepting valve (2) tends to close this valve rapidly, with the result that it would slam, were it not for the dash-pot which prevents this. The dash-pot piston (3) at the outer end of the intercepting valve stem works in the cylinder (H) formed in the outer end of the intercepting valve chamber head (4). When the intercepting valve is forced inward under full pressure, its too

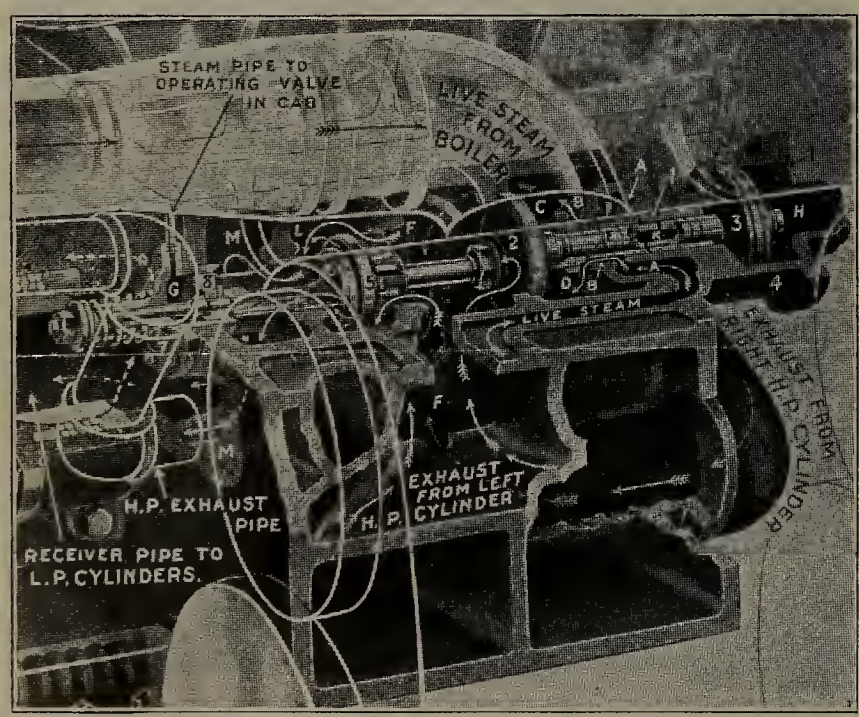

Fig. 4.—Intercepting Valve in Simple Position.

rapid motion is prevented by the slow escape of the air from under the piston (3) through the small port (J). This is practically the only function of the dash-pot. The port (K), extending through the center of the intercepting valve stem half way to the inner end, permits the escape of any steam that may leak past the small rings on the intercepting valve stem and reducing valve (1).

All of the ports of the intercepting valve have important duties to perform, and their location and sizes must not be changed.

The foregoing description with the lettered and numbered illustrations given is intended to make clear the construction and principle of the compound device applied to the American articulated compound locomotive, and the duty which each part of this device has to perform.

From the previous description of the intercepting valve, it will be seen, that to start a train with the articulated compound it is usually only necessary to open the throttle in the ordinary way with the reverse lever in the position required for the weight of the train or, ordinarily in the extreme notch; and with the cylinder cocks open. The intercepting valve will automatically assume the position shown in Fig. 1, and the locomotive will work simple until the pressure in the receiver has raised sufficiently to force the intercepting valve (2) into position Fig. 3, or compound position.

If the locomotive fails to move the train when started in this way or is about to stall on a steep grade, it should be changed into simple working by turning the handle of the emergency operating valve in the cab, so that it points to the rear; which causes the intercepting valve to assume position Fig. 4.

As explained, there is no increased tendency for the locomotive to slip when working simple; and moreover, when it does slip, the slipping is automatically arrested after only a few inches of movement of the piston. If, however, the locomotive starts to slip, it is advisable to use sand should the rail conditions be at all unfavorable.

The engineer can easily tell whether the locomotive is working simple or compound either by the sound of the exhaust or by the position of the emergency operating valve in the cab. When working simple there are eight exhausts to each revolution of the wheels; and, only four when working compound. In the former case the exhaust has more the sound of a continuous blow, the separate exhausts being less distinct. When working compound, the handle of the emergency operating valve, as stated, points forward; and, to the rear when working simple.

If the low pressure engine fails to start when the throttle is open, the trouble may lie in the reducing valve (1) having stuck in the closed position; due to the fact that it had not been properly lubricated or some foreign matter had worked into the bore of the valve. In such an event the admission ports (B) would be closed and no steam could get to the low pressure cylinder.

Such a difficulty can ordinarily be remedied by giving the reducing valve a little more feed of oil for a few minutes; or, if necessary, the cover of the dash-pot (H) may be removed and with a piece of bent ¼-inch wire the reducing valve (1) may be moved in and out a few times, after which it will probably clear itself when the throttle is open.

The intercepting valve should be given a liberal feed of oil for a minute before starting and occasionally during long runs when the throttle is not shut off for a considerable length of time. Outside of this, one drop of oil every four or five minutes is ordinarily ample when running.

NOVEL GERMAN CAR TIPPING INSTALLATION.

At the harbor at Hamburg, Germany, there is an interesting type of electrically operated coal car tipping apparatus built at Nurenburg, as shown in the accompanying illustration and drawing. As the water level of the Hamburg harbor varies from 2 meters to 6.2 meters, special provision has to be made in this electric coal tipping device for these differences of level in loading the coal barges.

On one side of the hoists, mounted in the small building above, an electric motor of 4.5 horsepower capacity is utilized; another motor of 7 horsepower capacity supplies the power for driving the drum and hauling in the ropes of the tipping apparatus.

The plant has a capacity of from 10 to 20 tons, and takes cars having wheel base from 2.5 meters to 4 meters. There are several of these electric coal tipping machines in Hamburg harbor, as well as a number of electrically driven jib hoists and other labor-saving devices for unloading and loading coal and other material. The capacity of these tippers is said to be from 15 to 20 cars per hour, each holding from 10 to 20 tons. The electrical equipment, including the motors, controllers and switchboard apparatus, was installed by the Siemens-Schuckert-Werke of Berlin.

For operating the motors of the coal tippers, electric cranes and hoists along the docks of the Hamburg harbor, current is supplied by underground cables, at a pressure of 400 volts, from the Kuhwarder power house of the Hamburg-American Line. The several electric coal tippers are located about 70 meters apart, with several tracks for handling the coal cars running along the wharves, as shown at the right in the illustration.

A large direct current motor in the pit is utilized for supplying the main power for the tipper through worm gearing, in addition to the two small motors of 4.5 horsepower and 7 horsepower capacity, having an output of 50 horsepower, and it is stated that in 30 seconds the car of coal can be tilted to 45 degrees and emptied into the coal barge.

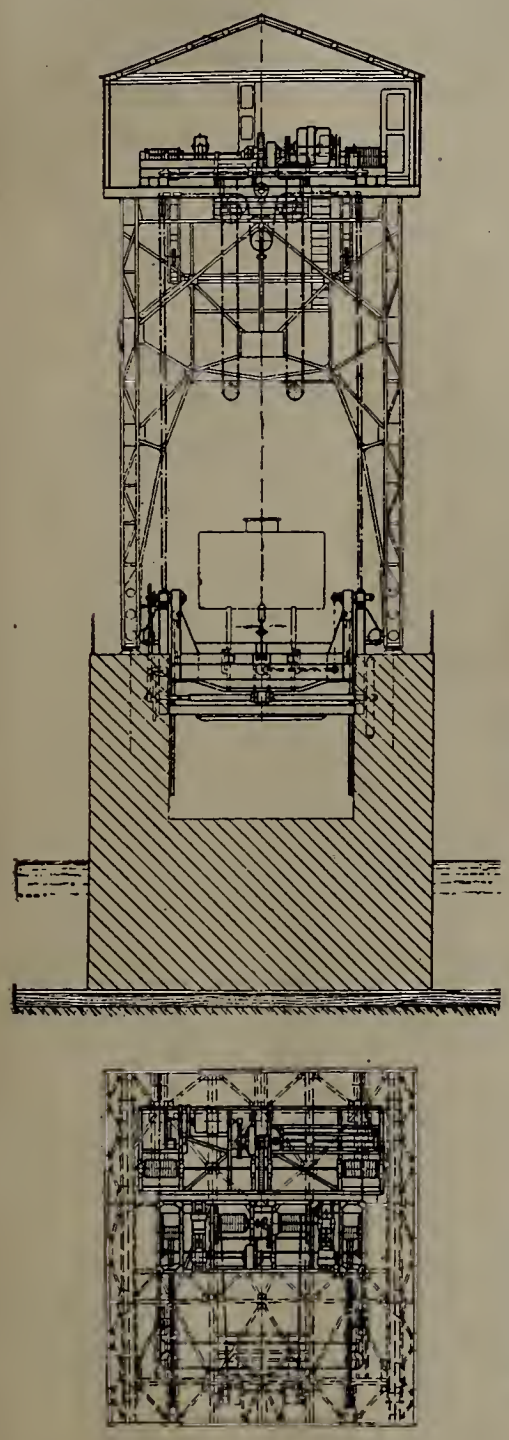

German Car Tipping Installation.

The coal cars are run onto the tilting platform and a pair of large hooks grip the car wheel axle firmly, holding the car to the platform, while the electric motor raises the rear end of the latter and the car of coal is discharged into the vessel or storage bin. The platform is then lowered by means of the electric motor, the car fastenings are removed and another loaded car quickly takes the place of the empty one.

This car unloader was constructed at Nurenberg, Germany, by the Vereinigte Maschinenfabrik Augsburg-Nurenberg. The installation is supplied with arc and incandescent lamps for illumination, so that these labor-saving devices may be kept in operation day and night if it is found necessary.

LOCOMOTIVE ASH PANS.*

By George L. Fowler, Consulting Mechanical Engineer.

The drawings furnished by the several railroad companies, showing designs of ash pans in use on their respective roads, have been examined with special reference to their applicability as fulfilling the requirements of law, namely, that on and after January 1, 1910, locomotives shall be equipped with ash pans that may be cleaned or emptied without making it necessary for a man to go beneath the engine or between the rails in order to do the work required.

In considering this matter there are two points of view that may be taken—one is that of a strict literal interpretation of the law and the other that of the spirit. It is evident that the intention of its framers was to construct a statute to protect workmen from personal injury while engaged in the occupation of dumping and cleaning the ash pans of locomotive engines. That this might be accomplished it was enacted that ash pans must be used on locomotives moving interstate traffic that can be dumped and cleaned without making it necessary for the man to go between the rails or beneath the engine. To anyone familiar with mechanisms of this character it is evident that they must be of a very substantial construction, simple in design, not apt to get out of order because of the stresses or heat to which they might be subject, and finally be easy to manipulate and not liable to clogging and sticking either by ashes or ice. Of all these requirements strength of construction and simplicity of design are the most easily met, but it is quite possible that, in two designs that are nearly identical, one may be very efficient and the other impracticable.

For example, where a simple slide is used to close a hopper pan: If one has free guideways from which the ashes are easily pushed and the other has a pocket or a closed end, the first may work year in and year out without causing trouble and the other be jammed at every operation. So in the

*From the report of the Block Signal and Train Control Board.

matter of warping plates; if these are not made of suitable metal, properly ribbed and strengthened, the heat of the ashes will distort them and cause them to bind. Finally, it was the undoubted intention of the framers of the law to require that all of the work of dumping and cleaning the ash pans and putting the engine back in working order should be done without the necessity of going between the rails or beneath the machine. If, then, an ash pan can be dumped and cleaned as required, while yet its parts can not be replaced without requiring that a man should go between the rails, it may fulfill the letter of the law, but it fails to meet its spirit and intention. Nor should a satisfactory ash pan be liable to frequent failure and disablement. It may be stated, then, that the requirements of a pan suitable for this work are that it should be strong, simple, easily manipulated and not liable to get out of order from load, manipulation, or heat; and not the least of the requirements is that it should not be liable to freeze shut.

It is not thought to be necessary to criticise the designs in the light of an ideal pan, but rather to regard them solely on the basis as to whether they fulfill, when in good order, the simple requirements of the law; and it is as such that they will be considered.

Speaking broadly, there are two general types of ash pans in use on American locomotives, the hopper bottom and the shallow, flat pan. The latter is almost wholly confined to old and light locomotives where fire boxes are low and between the frames, whereas the hopper type is in use on all locomotives where the foundation ring of the fire box is placed on top of the frames, and where the length of the fire box is greater than the distance between the axles over which it stands.

Shallow Pans.

As for the so-called shallow pans, a number of arrangements are presented that make cleaning from the cab or the side of the tracks possible. These may be classified as the blower, drop bottom, slide, and side cleaning.

Of these the blower method appears to be the most extensively used. It is an application of a series of steam jets across one end, with nozzles so directed as to blow the contents of pan out at the other end. It is effective and can be made to clear the pan completely. Examples of the use of this type of pan are to be found on the Chicago, Milwaukee & St. Paul; the Wabash; the Minneapolis, St. Paul & Sault Ste. Marie; the Seaboard Air Line; the Chicago Great Western; the Duluth & Iron Range; the Wheeling & Lake Erie; the Elgin, Joliet & Eastern; the Duluth, Missabe & Northern, and Colorado & Southern railways. In one case, that of the Duluth, Missabe & Northern, the jets are in two series; there is a shallow pan which extends over the top of an axle, and then drops down to a deep section back of the axle. Here there is a row of blowers at the front end of the shallow section, the steam from which drives the ashes into the deep section at the rear, from which they are ejected by a similar set of jets.

Of the drop-bottom type there are two varieties, the slat and the drop door. The slat is represented by the shallow pans of the Chesapeake & Ohio and the Chicago & Eastern Illinois. In the former there are a series of cast slats extend-

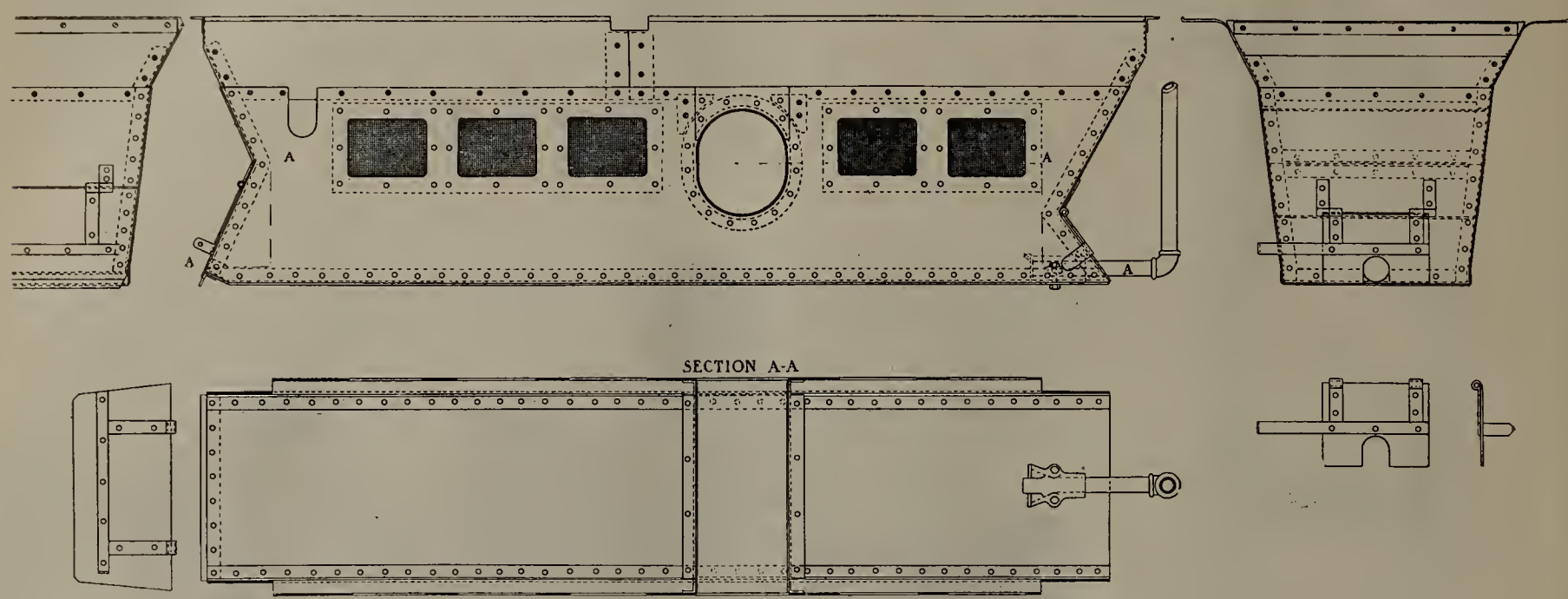

Shallow Ash Pan, E. J. & E., Illustrating Method of Cleaning with Steam Jet.

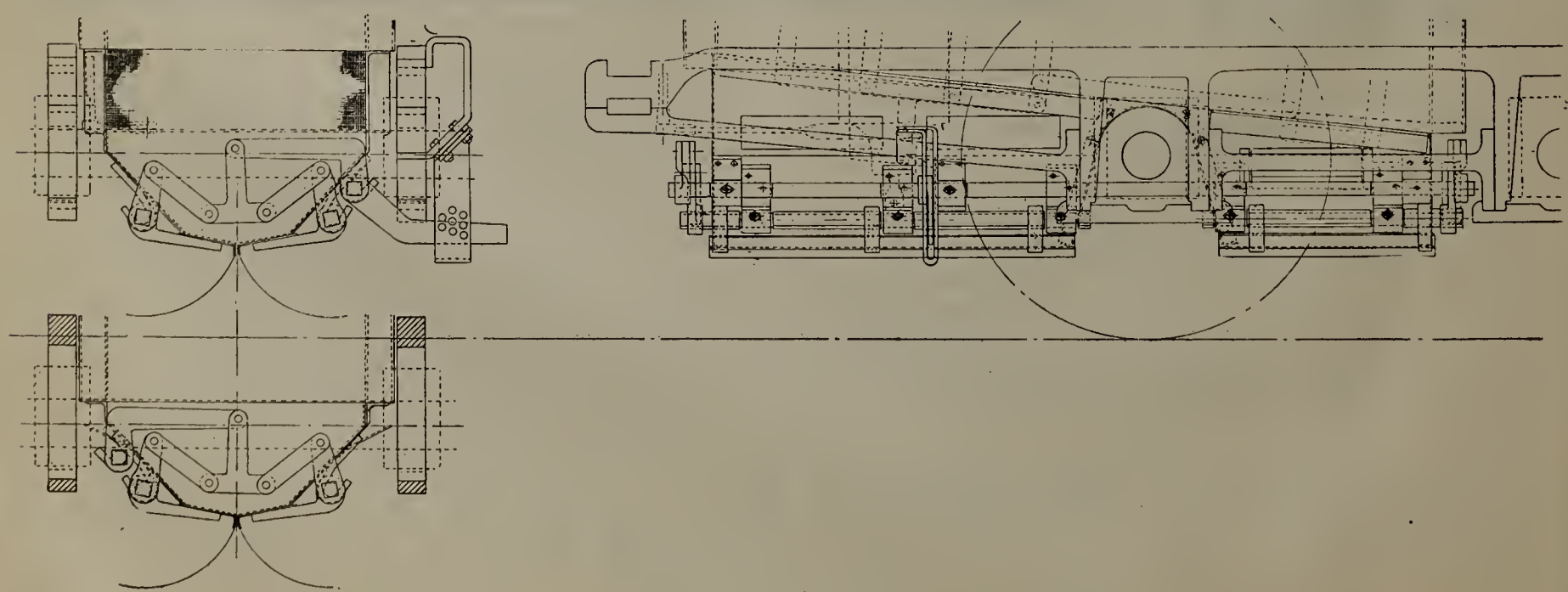

Shallow Ash Pan, Penn. Lines West, Illustrating Use of Swinging Drop Bottom.

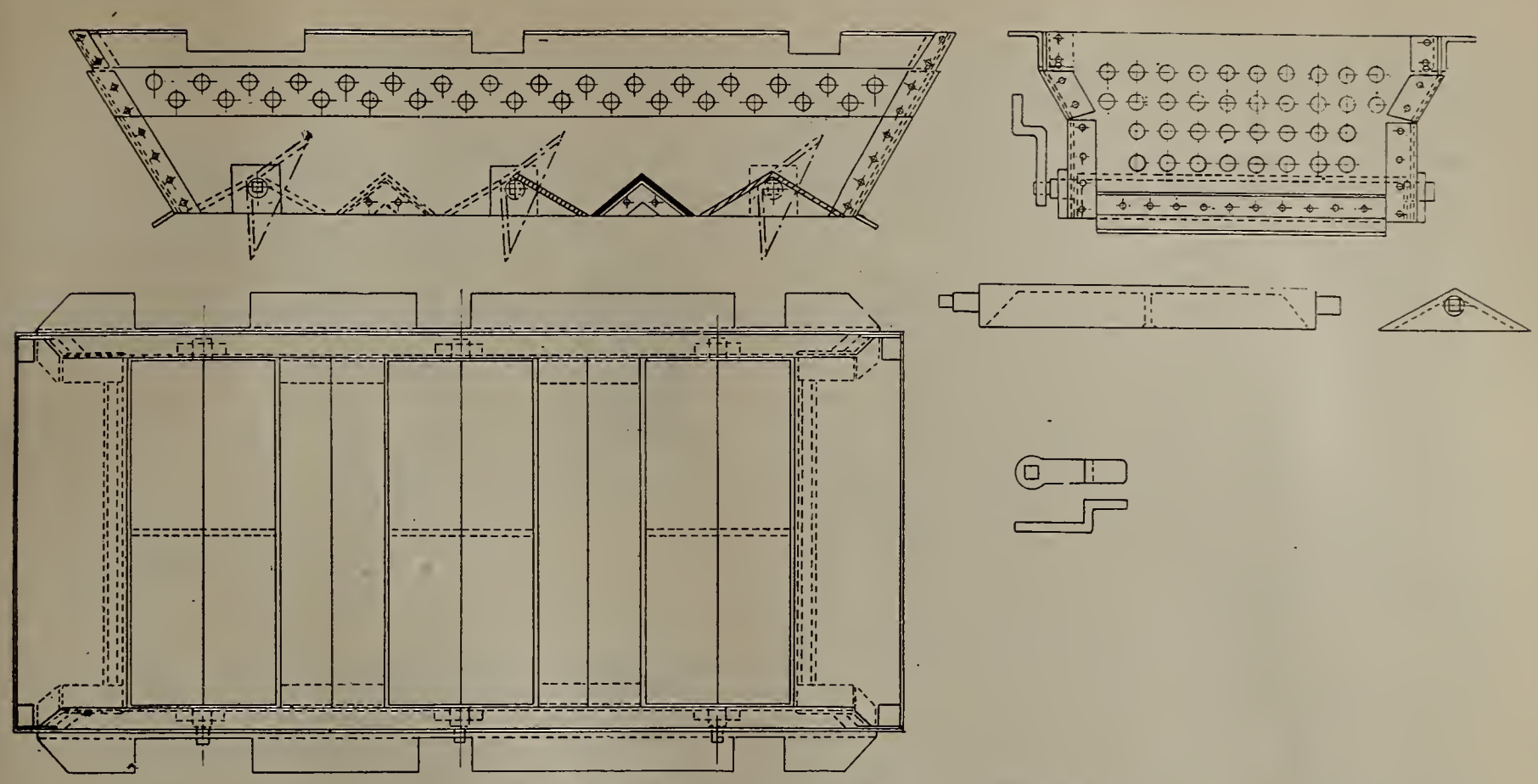

Shallow Ash Pan, E. J. & E., Illustrating Use of Slats to Form Bottom.

ing across and forming the bottom of the ash pan. They are pivoted on their center line and are moved by a rod connected to each one in exactly the same manner as an ordinary window blind. In the ash pans of the Chicago & Eastern Illinois this is modified by the introduction of a series of dead plates that alternate with the movable slats. These dead plates have upper surfaces that are inclined, so that when the space covered by the movable slats is opened the ashes will slide out and fall to the ground. Another form of drop bottom is that of the Pennsylvania Lines West, where there are two plates that are hinged on bars extending the length of the fire box on either side, and which come together on the center line. By turning the bars, the plates may be swung down out of the way. In the case under consideration this is done by a man at the side of the track, who works a lever by which the flaps are opened or closed.

The slide method of closing the shallow pan is used on the engines of the Missouri Pacific. As it is evidently impracticable to use a slide whose surface is equal to the area of the whole bottom of the pan, the bottom is divided into two small, shallow hoppers, each of which is closed by a slide, and these two are connected so as to be operated by a system of levers.

The last method is that of having sliding doors in the vertical side sheets of the ash pan. With these it is necessary for the workman to draw the ashes out by hand, which he can readily do from one side of the track. Such a pan is illustrated in that of the New York, New Haven & Hartford. It is the simplest of any construction, and while provision is made for cleaning from the sides, it is also possible that the men may assume the risk of going beneath the engine to do the work.

Hopper Pans.

Of the means for cleaning hopper-bottom pans, the sliding and the swinging door are the two classes in use.

The sliding door ordinarily consists of a simple flat slide moving horizontally. When it is worked from the cab, its line of motion is usually parallel to the longitudinal axis of the engine. When operated independently, the slides have a transverse motion and are worked from one side of the track.

The most common form of hopper bottom is that having a slide with a longitudinal motion, the slides of the several hoppers being connected together so as to be operated in unison. This arrangement is shown in the drawings furnished by the Chesapeake & Ohio, the Chicago, Rock Island & Pacific; the Chicago, St. Paul, Minneapolis & Omaha; the Colorado & Southern; the Delaware, Lackawanna & Western; the Denver & Rio Grande; the Kansas City Southern; the Maine Central; the Missouri Pacific; the Minneapolis, St. Paul & Sault Ste. Marie; the Richmond, Fredericksburg & Potomac; the Seaboard Air Line, and the Wisconsin Central railways. On the drawings sent by the Missouri Pacific and the Chicago, Rock Island & Pacific no means of operating these slides is shown other than by going beneath the engines. It is assumed, however, that such provisions have been made on the engines themselves.

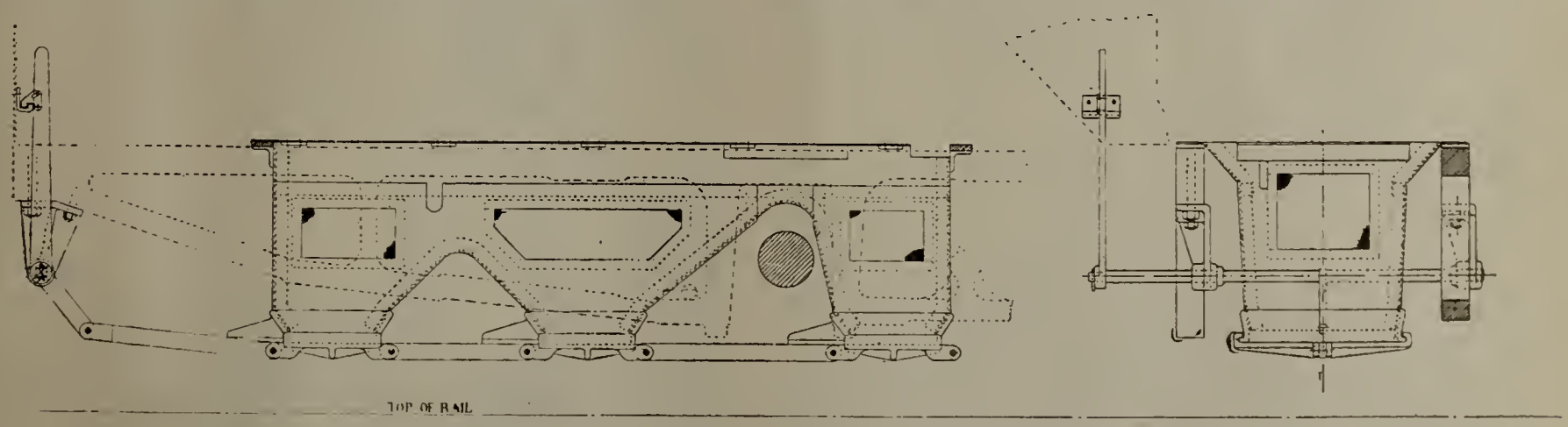

Hopper Ash Pan, R. F. & P., Illustrating Use of Slide in Bottom.

While this method of operating ash pans will work satisfactorily when the parts are in good condition, it may happen that a jamming of the ashes in the clearance spaces will so bind upon the slides that they can not be moved with the ordinary means provided. Under such conditions the usual method is to go beneath the engine and jar the slides loose with a hammer. With this exception the arrangement fully complies with the requirements of the law.

A modification of the plain flat slide, but operated in the same manner as that already described, is one in use on the St. Louis & San Francisco. Instead of the flat plate there are pans that slip beneath the mouths of the hoppers. When these are removed the ashes above fall to the ground; but no means is shown for cleaning the pans themselves without working beneath the engine, and no means is shown for operating the pans themselves. This plan can not, therefore, be approved until further drawings are provided showing the method of operation. It is known as "Anderson's locomotive ash pan."

For simplicity of construction the plain slide, moving laterally and worked by hand from the side of the track direct, and as used on the New York, New Haven & Hartford, takes the lead. These slides are pulled out on either side of the engine and after the ashes have fallen out they are replaced.

As to whether this design meets the law will depend upon the interpretation which may be put upon the law in the light of the question already referred to. In this case the hopper extends 9 ins. on each side of the center line of the tracks, or to a point 19¼ ins. inside the rails. In order to place this slide back in position after it has been withdrawn, the man must have at least a portion of his body from 14 to 17 ins. between the rails and probably the whole of it beneath projecting portions of the locomotive. But the hopper can be cleaned without going beneath the engine or between the rails.

Closely allied to the simple flat slide is one that is curved and moves through the arc of a circle. As constructed in the designs submitted to the board, it is an adaptation to the ash pan of the well-known cinder hopper or chute used on smoke boxes. In it the slide is carried on a pin which sustains the whole of the load, holds the mechanism in place, and serves as a pivot about which it turns. It is operated from the side of the engine, as on the engines of the Buffalo, Rochester & Pittsburg, or by a steam or air cylinder, as on those of the Chicago & Eastern Illinois. Both of these fully comply with the requirements of the law.

Of the swinging doors there are two general types in use. One is a simple flap, hinged at one edge and held and moved at the other by the operating mechanism. The other may be one of various modifications of a flat door pivoted at or near the center. Examples of the first-mentioned type are to be found in drawings submitted by the Chicago Great Western, the Chicago, Rock Island & Pacific, and the Wabash railways. In all of these the operating mechanism is manipulated from the side of the engine, outside the rails. The Chesapeake & Ohio presents a combination of the slide and flap in an engine with three hoppers, two of which are closed by a flat slide and one by the swinging flap, all being connected together and operated by a single lever located well outside the rails.

A modification of this arrangement is shown in the case of the Pennsylvania Lines West, where identically the same arrangement is used for hopper-bottom pans as for the shallow pans already described, with suitable changes of dimensions and of detailed arrangement of the parts.

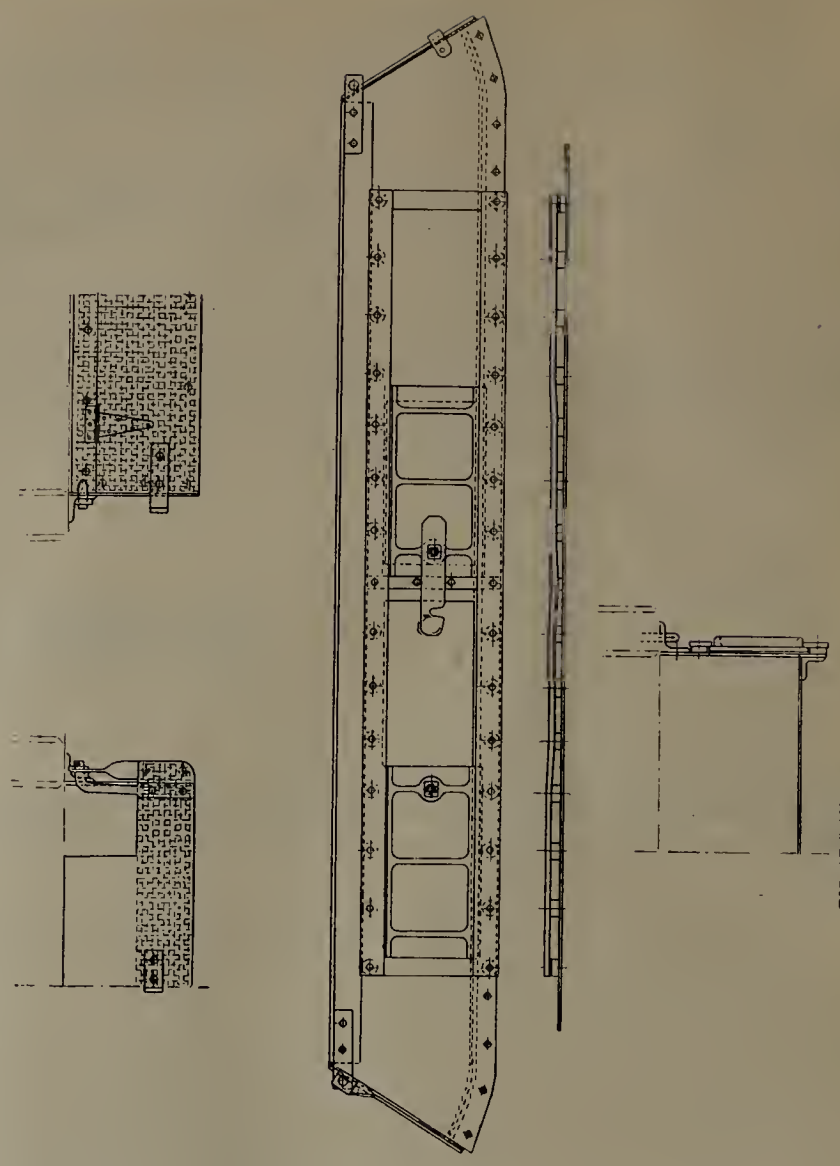

Shallow Ash Pan, N. Y. N. H. & H., Showing Openings in Vertical Slides.

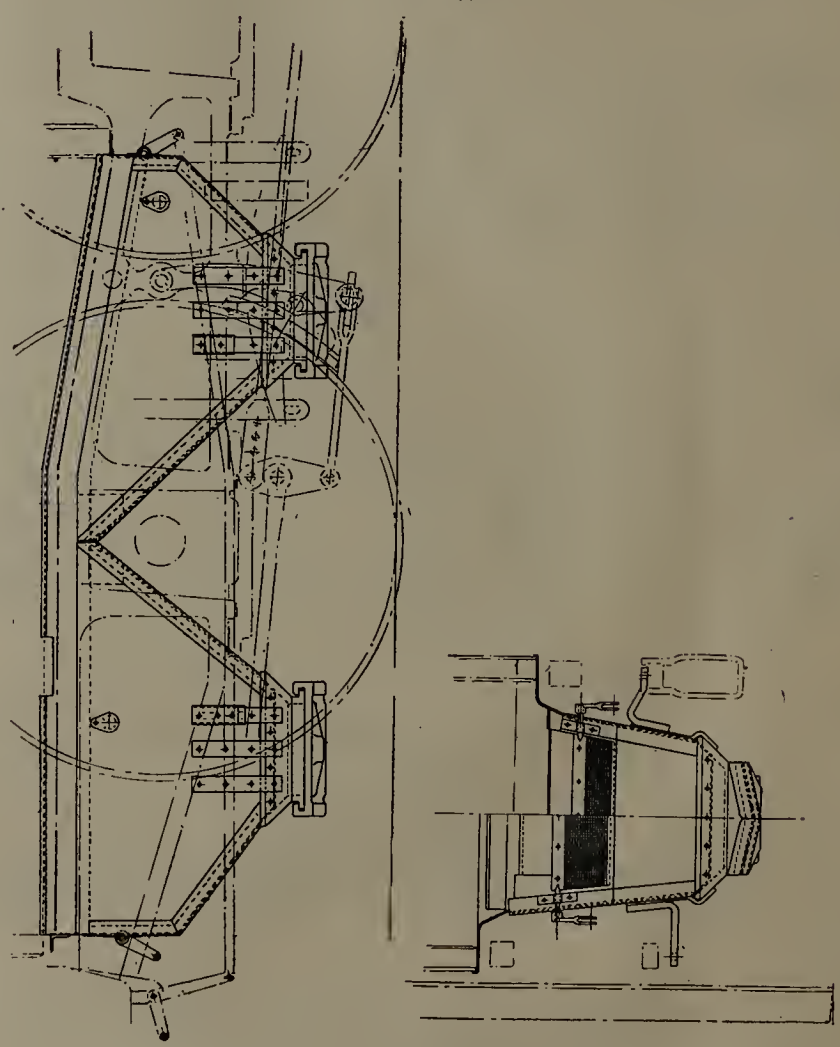

Hopper Ash Pan, N. Y. N. H. & H., Showing Use of Lateral Slides.

In a number of designs presented the doors are arranged to be swung out of the way and clear of the hopper. They are carried by swinging hangers and are usually directly supported on trunnions cast directly on the plates themselves. Examples of such doors are presented in the drawings of the Wabash; the Chicago, Milwaukee & St. Paul; the New York Central & Hudson River; the Lake Shore & Michigan Southern; the Wheeling & Lake Erie; and the New York, Ontario & Western railways. In all of these the doors are both opened and closed from the cab or the side of the track, and therefore fully comply with the law. In some the operating mechanism is complicated, as in the case of the Wabash and the New York Central, though in most it is very simple. The general scheme, however, is to support the plate that closes the hoppers by trunnions by means of swinging hangers, and in letting out ashes to push the plate out of the way. These hangers all stand at

an angle when the door is closed, so that, as it approaches the closed position, it has an upward increment of motion. This is shown in its simplest form in the ash pan of the Wheeling & Lake Erie.

Of all those shown, probably the most efficient is that used on the New York, Ontario & Western; the Lake Shore & Michigan Southern; and the Cincinnati, Hamilton & Dayton. In this there are two trunnions on the side of the plate. To the forward one the supporting hangers are pivoted, and to the back one the connection to the operating rod. The latter is worked from the cab. On the first motion of opening, the inclined hangers cause the plate to drop away from the hopper, thus it is at once freed from any clogging of ashes or resistance of ice. As the plate moves forward the ashes drop off and are pushed to the back. This overloads the rear portion, which thus tends to tilt down. This tendency is accentuated by the thrust of the connecting bar, with the result that the plate is cocked to a sharp angle and swings up behind the hopper with a forward movement of the bar of but about one-half the width of the opening. In closing, the pull on the bar tends to draw the plate into a horizontal position. This device was patented and was first used on the New York, Ontario & Western, where it was known as the "Beals ash pan." The patent has, however, long since expired and it is free for common use.

REVIEW.

It will be seen, then, that so far as general design goes all of these ash pans fulfill the requirements of the law, with the possible exception of the one having transverse slides on the New York, New Haven & Hartford and those in which no operating mechanism is shown, as noted. As to whether all of these slide pans, however, will operate under the severe conditions of frost and snow to which they may be subjected will remain for the inspectors of the board to ascertain, so that a final approval for their use should not be given until this is known to be the case.

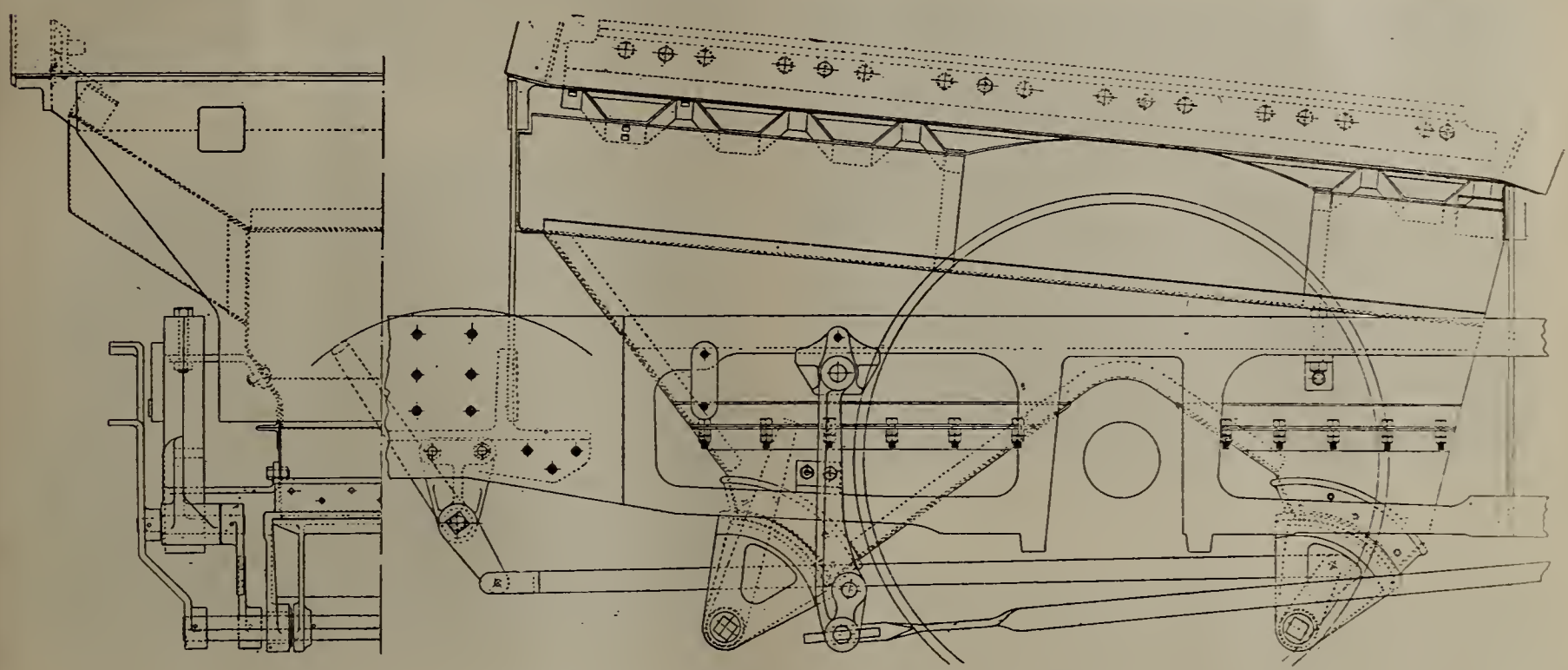

Hopper Ash Pan, B. R. & P., Illustrating Circular Slide.

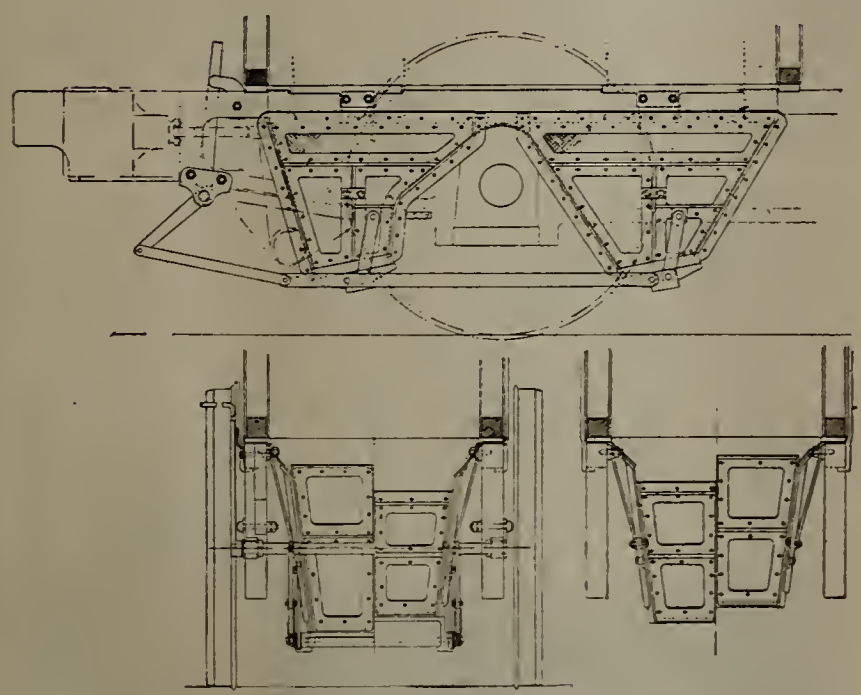

Hopper Ash Pan, C. H. & D., Showing Swinging Door.

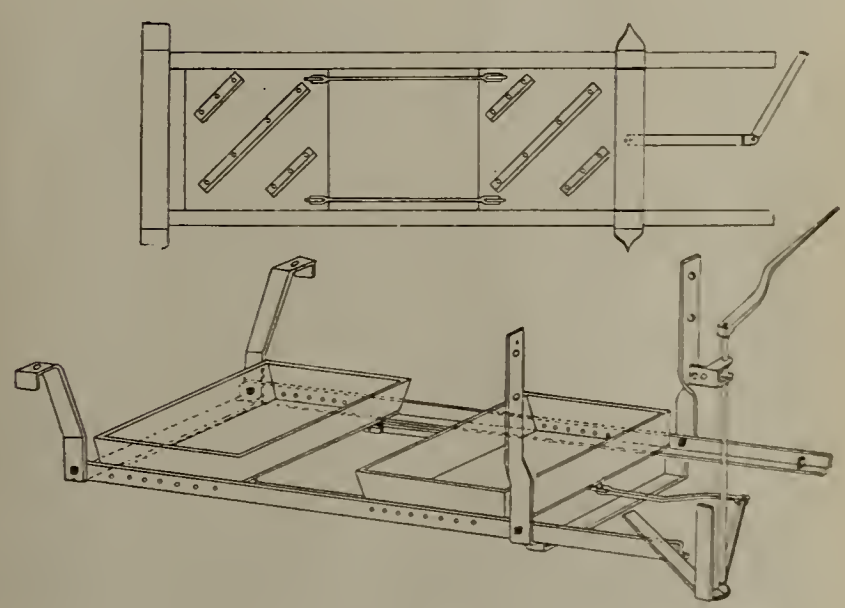

Hopper Ash Pan, Frisco, Showing Use of Pan Slides.

In considering the relative merits of the pans that have been passed under review it must be borne in mind that any and all of them are capable of working in an efficient and satisfactory manner when they are in good condition. Speaking purely the pan with a swinging bottom is much less likely to become from personal experience and observation, I have found that disarranged than one with a sliding bottom. The latter is much more liable to become clogged with ashes or frozen shut than the swinging bottom.

If a sliding bottom pan, like that used by the Richmond, Fredericksburg & Potomac, becomes frozen, it will be exceedingly difficult to jar it loose without going beneath the engine. The ice may be cracked, but it will jam and prevent the movement of

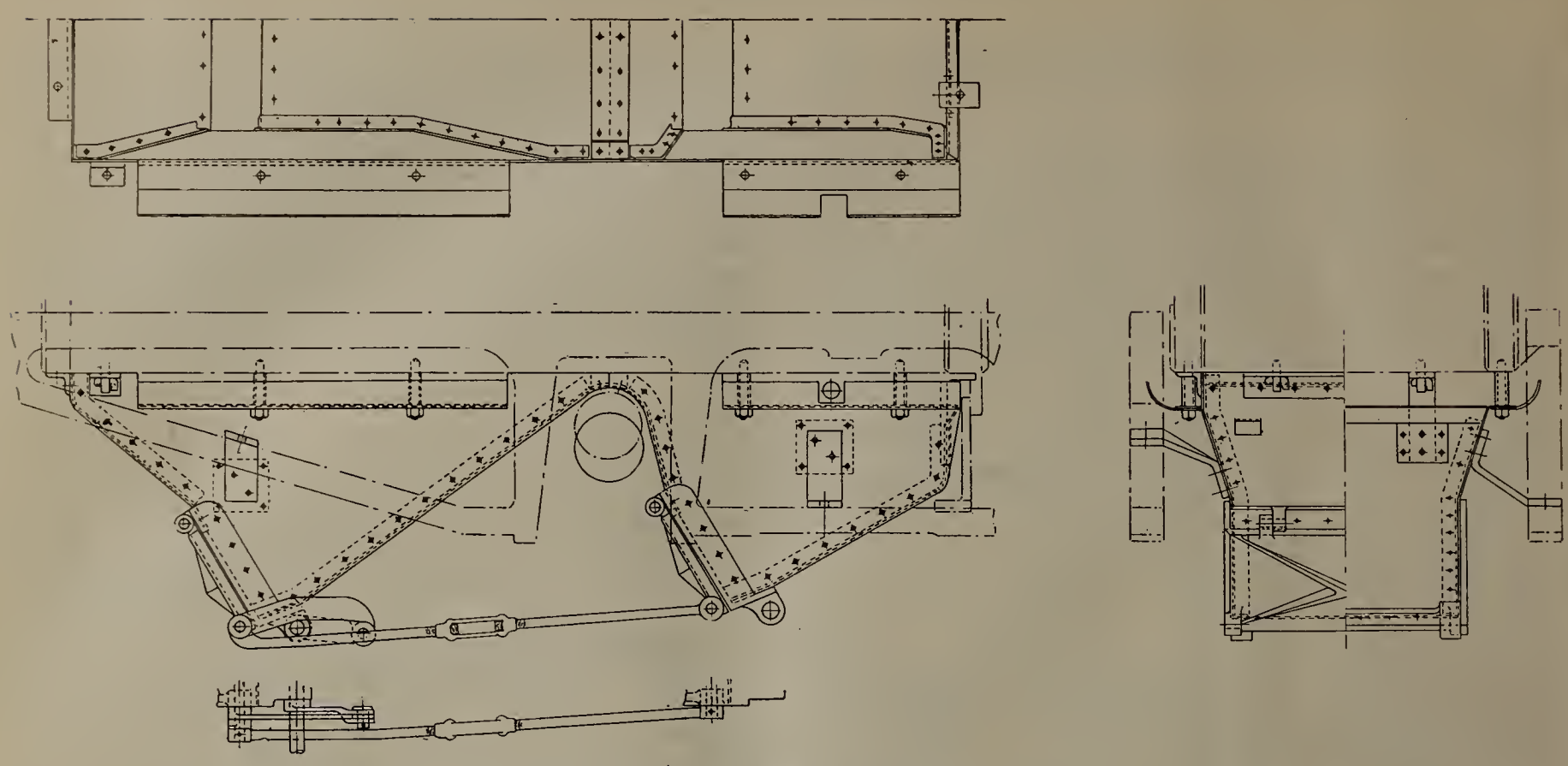

Hopper Ash Pan, C. R. I. & P., Showing Flap Door.

the slide; so that, in order to insure a freedom from this trouble, some means of thawing out must be provided; this is done on some roads.

On the other hand, the swinging door whose first movement is away from its seat on the frame, is not apt to be held by the ice, or if it is, a blow on the side of the pan will crack such ice and allow the door to drop away at once.

In general, then, the swinging door as represented in the illustrations of the ash pans of the Pennsylvania Lines West, the Chicago, Rock Island & Pacific, and the New York, Ontario & Western are to be preferred.

Of course, where the sliding door is used in a warm climate the danger of freezing does not exist and the precaution which would have to be taken in more northern latitudes would be unnecessary.

The drawings accompanying this report may be taken as typical of all that have been discussed.

CONCLUSIONS.

The situation, as it appears to me, is as follows:

For some time the builders and railroad companies have been applying ash pans to locomotives that are considered to meet the requirements of the law.

Some of these would hardly be accepted except under a liberal interpretation.

Some will work well under favorable conditions, but are liable to disarrangement and clogging.

Some will work under all conditions and rarely fail.

The designs submitted by the railroads may be grouped under (1) those using rotating slats, (2) slides, (3) steam blowers, (4) flap doors and (5) swinging doors.

For shallow pans the steam blower and the flap door, as on the Pennsylvania Lines West, are to be recommended as the most efficient.

For hopper pans I should place in order of excellence, dependability and efficiency, first, the swinging door (New York, Ontario & Western); second, the flap door (Pennsylvania Lines West and Chicago, Rock Island & Pacific); third, the horizontal slide (Richmond, Fredericksburg & Potomac), all of which are illustrated.

Where the horizontal slide is used it will be advisable to provide means for thawing in cold climates.

Other types may be considered efficient, but to an inferior degree.

R. H. Hyland & Company announce their removal from the Fisher Building, Chicago, to their new offices and warehouse at 725 South Dearborn Street. This company carries a complete line of railway and contractors' machinery and supplies, having taken over the business formerly carried on by G. H. Olmstead. The warehouse affords facilities which enables the filling of all orders promptly from stock.

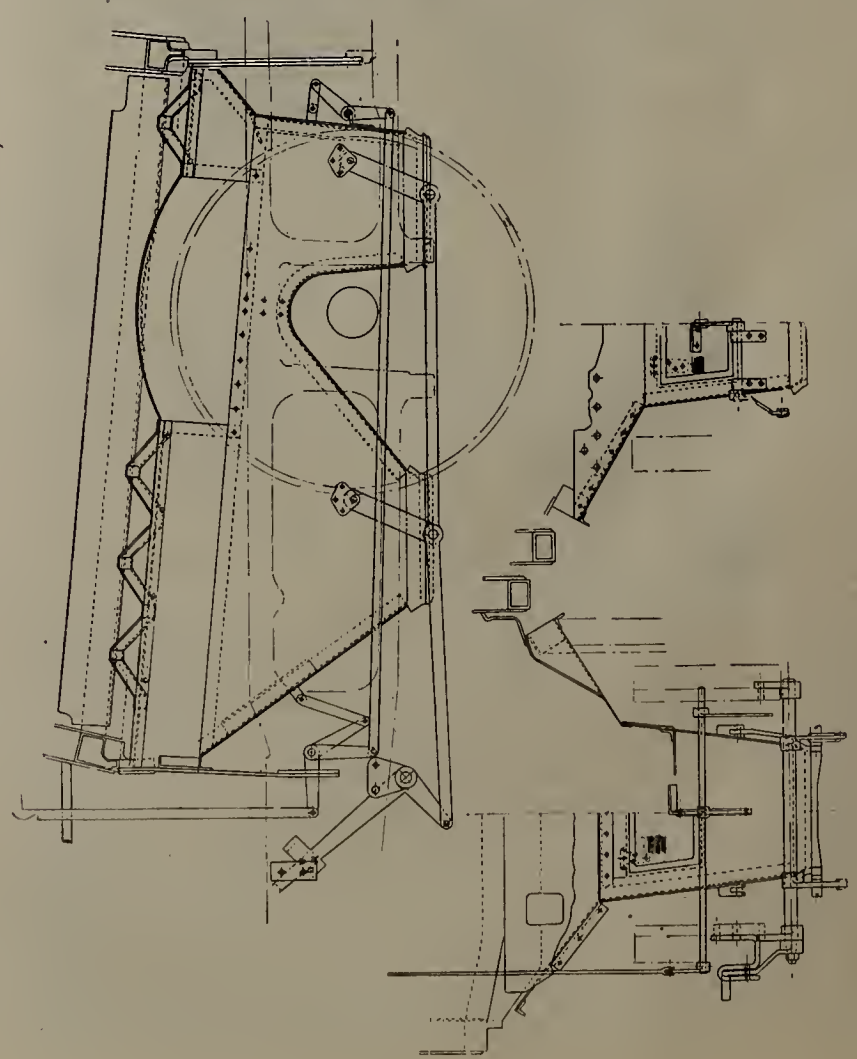

Hopper Ash Pan, W. & L. E., Showing Swinging Door.

Shop Kinks

An item good enough to publish is good enough to pay for

AT SPRINGFIELD SHOPS, WABASH R. R.

The shops of the Wabash at Springfield, Ill., were built about 1864, but this does not seem to have hindered their efficiency, for the lack of some of the more modern facilities has stimulated the production of many labor-saving devices about the shop and compressed air is an essential feature of most of them. In fact, it seems that if the air compressor went out of business temporarily it would shut down the shop. Incidently it may be said that the shop and grounds are kept in a clean orderly condition and this is always a credit to those in charge.

Fig. 1.—Handling Air Pumps, Springfield Shops.

Figures 1 and 2 show the manner in which air pumps are handled at the repair bench. They are lifted by a radial air crane and placed on the small iron table and quickly bolted to it by two or four bolts as shown. The heavy support for this table is hinged to the bench and the table has two movements. It can be rotated upon its support and can be dropped from a horizontal position to a vertical one about the hinge as an axis. This latter movement is easily accomplished by means of a horizontal air cylinder located underneath the bench, but not visible in the photographs. At the end of the piston rod is a wheel (A) which when moved along the horizontal guides (B) rolls on a cam-like bearing under the table and allows it to be raised or lowered through an angle of 90 degrees. It allows the air pump to be handled quickly and easily and was devised by J. F. Green, general foreman.

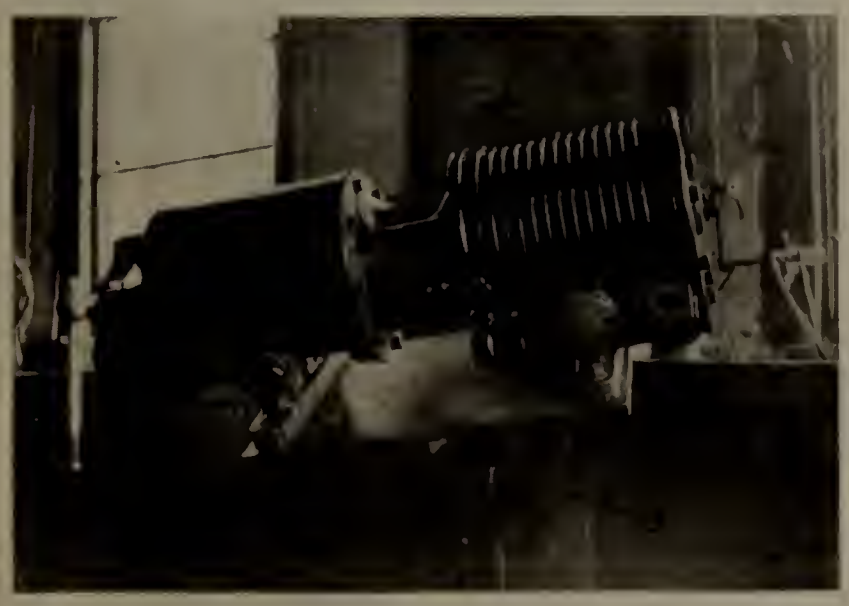

Fig. 2.—Handling Air Pumps.

The pipe bending machine shown in the illustration was designed by Peter Lofy, foreman of the pipe and tin shop. It effects a considerable saving in this department. It is operated by air and takes all size pipes from 3/8 in. to 2½ in., copper pipe included. One inch pipes or larger are filled with sand which serves to retain the circular shape at the bend.

Pipe Bending Machine, Springfield Shops.

Figure 3 is a machine for putting bands on car and locomotive springs, the three air cylinders, A, B, C, which furnish the power, being plainly visible. Cylinder A in connection with block D is used to hold the spring in position while the hot band is slipped on. When the band is in place the spring is shifted to the other side of the machine and the

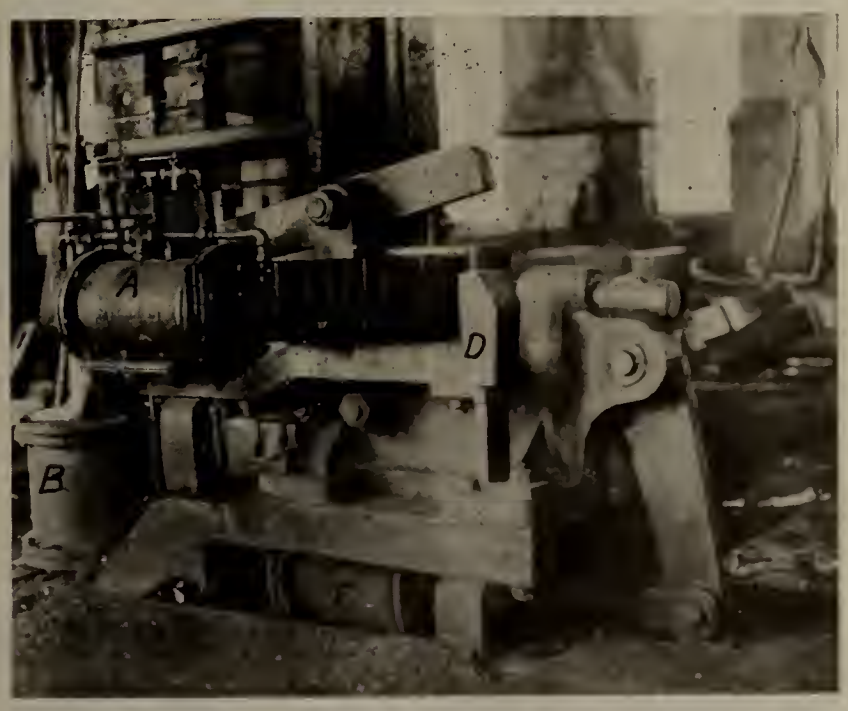

Fig. 3.—Putting on Spring Bands, Springfield Shops.

band is fastened in place by means of cylinders B and C, the action of which is readily seen from the illustration. This machine was devised by Sam Wheal, blacksmith foreman.

Figure 4 shows a machine for putting on and removing hose fittings. Old fittings are removed at A by means of air cylinder B. The hose is then clamped by block C, which is actuated by the air cylinder below and the new fitting is pressed in place by cylinder B, thus it is seen that this cylinder serves a double purpose. Clamps are then tightened by the claw-like arrangement at D. The valve near cylinder B is so arranged that both movements of the piston in B and the block C can be controlled by it

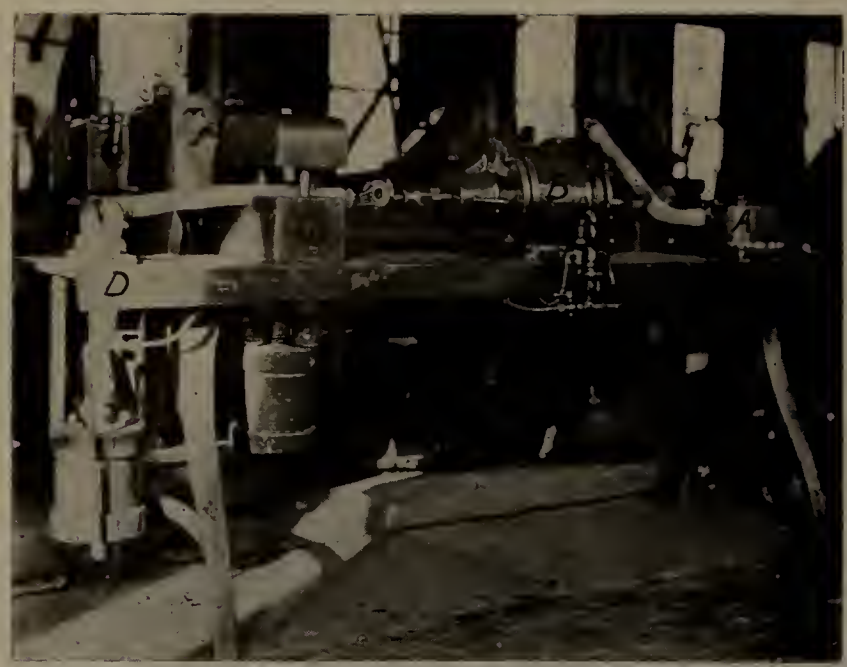

Fig. 4.—Hose Fittings Machine, Springfield Shops.

The flue swedger shown in Figures 5 and 6 originally had hand control, but by the addition of an old triple valve and an auxiliary valve at the top has been made to operate automatically by pressing the foot lever shown in the lower right hand corner of the illustration.

In the office of General Foreman J. F. Green is a board from which one may tell at a glance the record and date of boiler washing of any engine on the division. The board is perhaps 3 x 6 feet in size and is painted black. It is divided up into thirty-one vertical columns, one for each day of the month, while the engine numbers are arranged in a column down the left side of the board, thus giving each engine a little square for each day of the month. In the center of each little square is a hole in which is inserted a peg showing the date and kind of washout given. Three different colored pegs are used—yellow denoting a complete wash, green a leg wash and red a change of water. These pegs are

Fig. 5.— Flue Swedger, Springfield Shops.

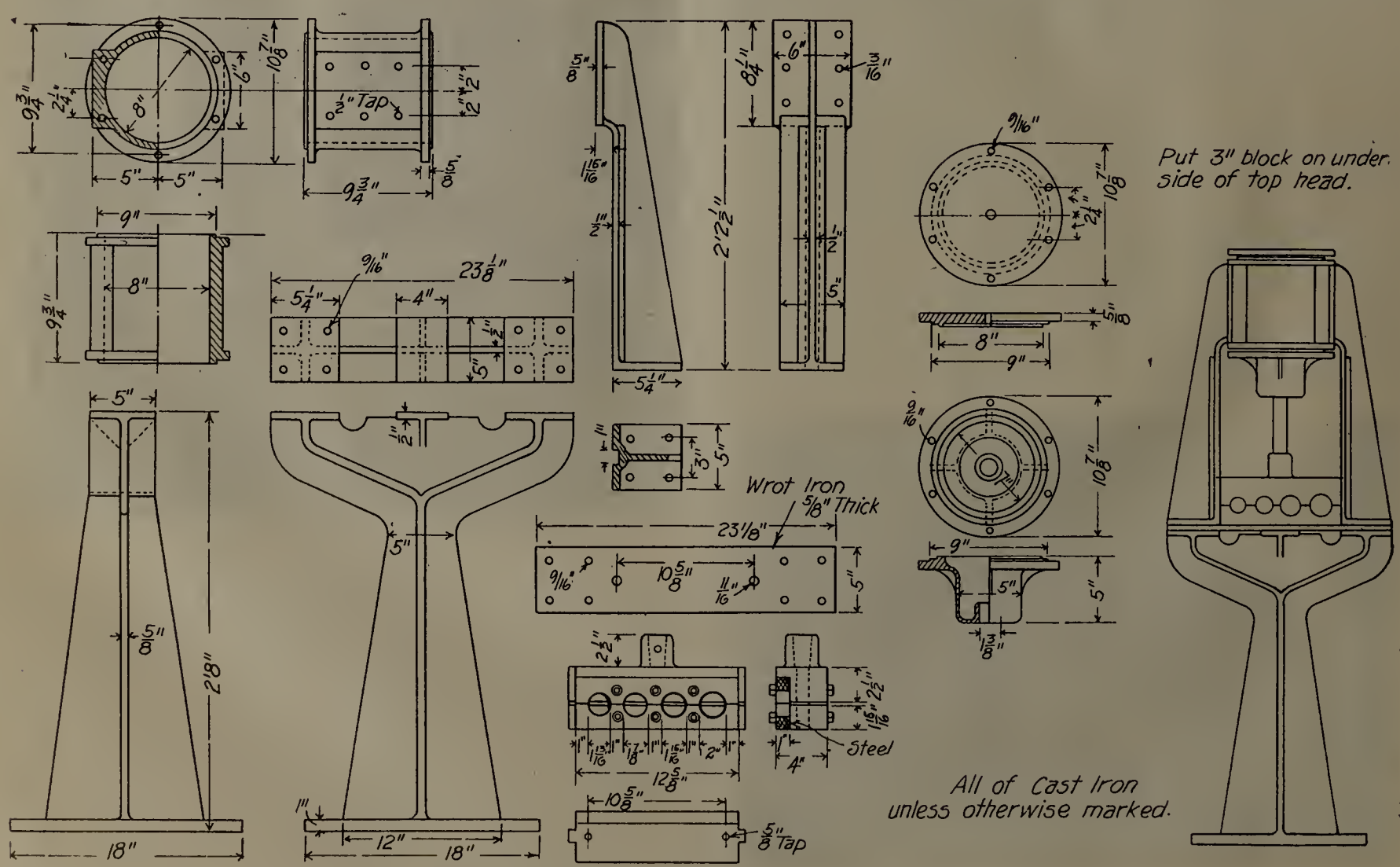

Fig. 6.—Details of Flue Swedger, Wabash R. R.

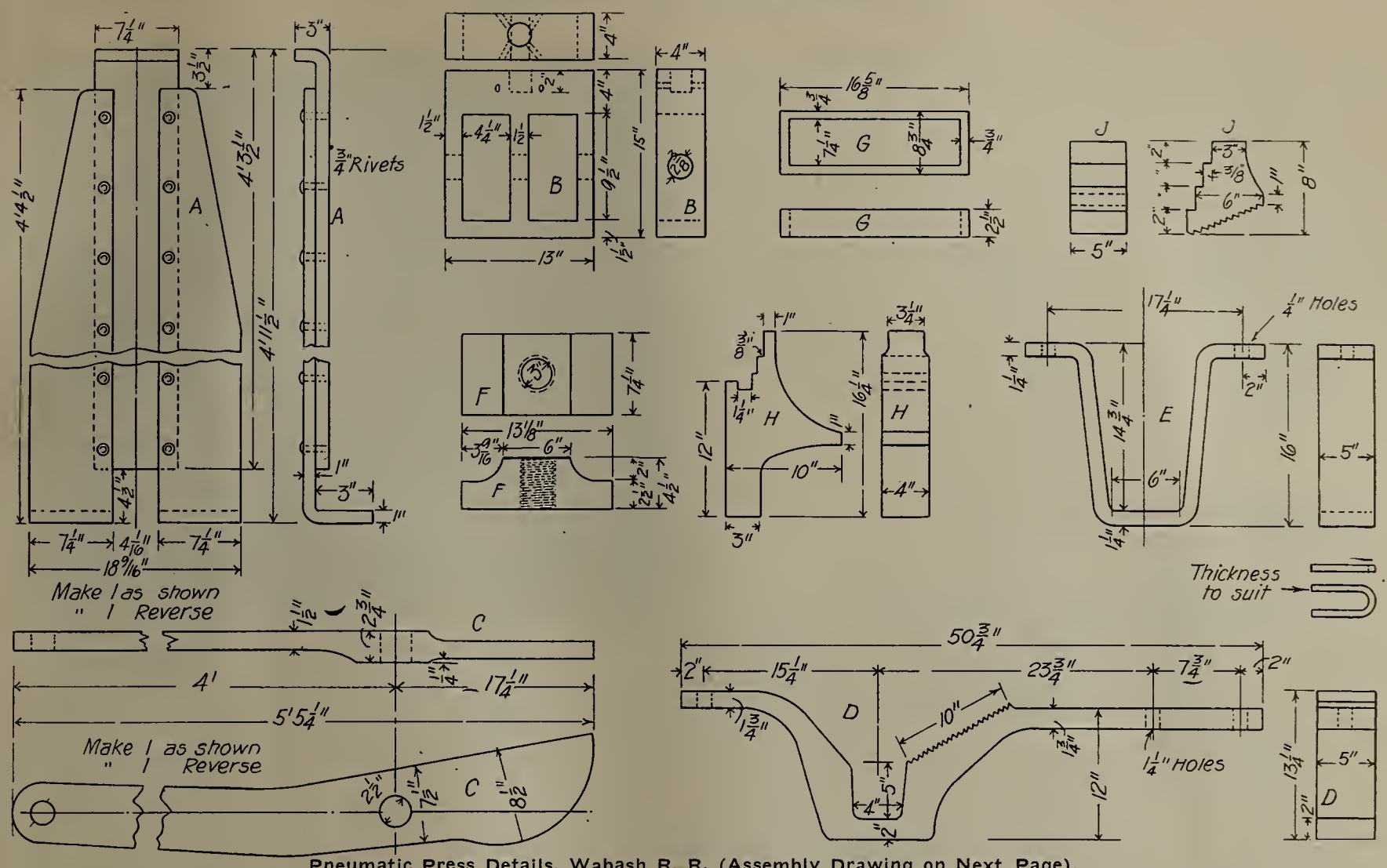

Pneumatic Press Details, Wabash R. R. (Assembly Drawing on Next Page).

plugged in three columns at the right side of the board until ready to be used. Each day as the reports come in, the clerk "plugs" up the board to correspond and at the end of each month makes up his report from it. Thus, say, opposite engine 718 we find yellow plugs on the 3rd, 10th, 19th and 31st, denoting a complete wash on those dates, and a red plug on the 14th, denoting a change of water.

Fig. 7.—Truck for Light Springs.

Figure 7 shows a handy truck for the lighter car springs. It is composed of only seven pieces and comes in handy for other purposes besides trucking springs.

PNEUMATIC SPRING BAND STRIPPER.

By S. Wheal, Blacksmith Foreman, Wabash R. R.

In order to do away with sledging spring bands off by hand, which in addition to damaging the bands took hard labor and time, we got up the machine shown in the illustration With the aid of this machine and a helper we have taken off 13 bands in 24 minutes. The following description is based on the above drawing.

A—Guide made of three pieces which are riveted together and bolted to frames. These frames are old front engine frames, with two old side rods bolted below and can be made from channel iron.

B—Cross head made of wrought iron.

C—Levers made from old steel axle.

D—Pocket which is made from old steel axle, with teeth in back end.

E—Brace for pocket.

F—Top for screw.

G—Band for top which is made hot and shrunk on.

H—Grip block for tank truck springs.

I—These U pieces are made from ½ in. to 1½ ins. thick

Pneumatic Spring Band Stripper, Wabash R. R.

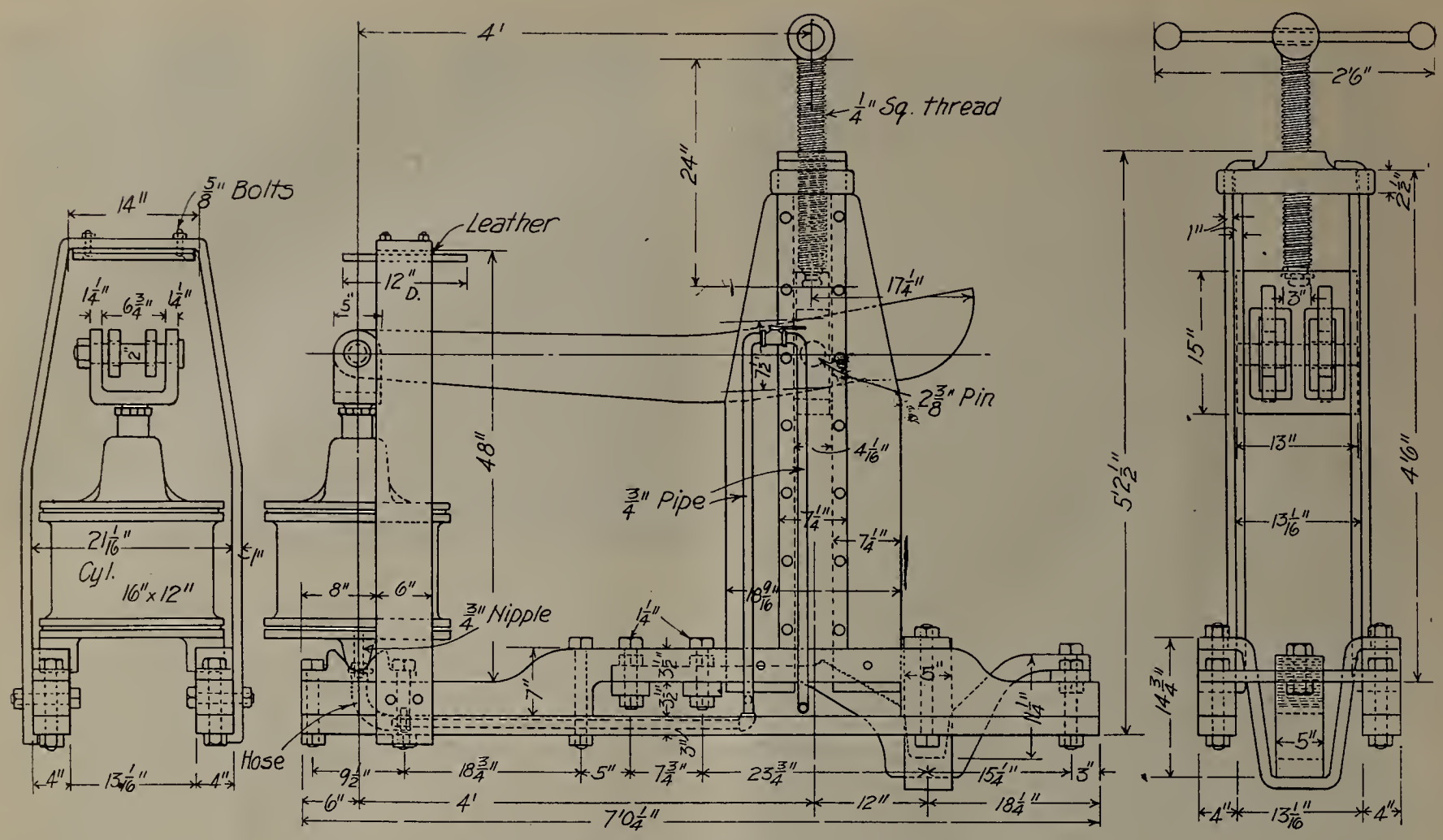

Pneumatic Press for Pressing Off Spring Bands.

and are placed over the pin in the cross head to keep the levers the right distance from the spring. The levers can be adjusted with these U pieces to suit any spring and a third U should be placed over the pin between the levers.

J—Grip blocks for driving springs are made with teeth to set on the teeth of the pocket.

Grip block "H" is made for eight leaf tank truck springs, and is replaced on the teeth of the pocket by grip block "J" for other classes of springs. Driving springs are placed in the pocket and the grip block is placed on same, holding it in position. By adjusting the block the spring can be leaned backward or forward, so when pressure is on the levers they will be in the center of the spring band. These grip blocks are cut to put three to five plates of the springs and are the essential features of the machine.

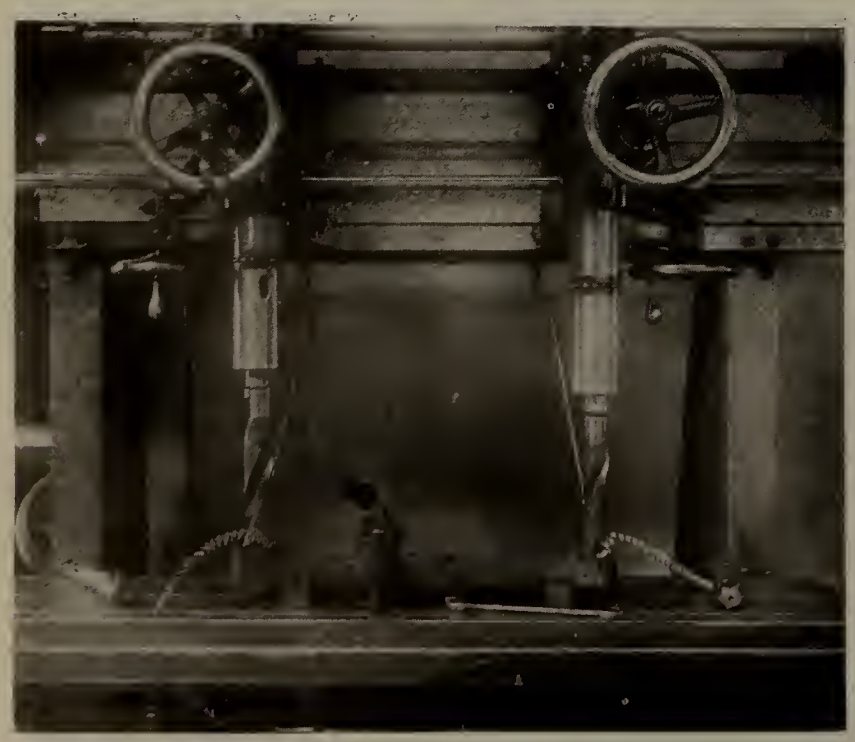

Fig. 2.—Drilling 1¾-inch and 2-inch Holes in Locomotive Spring Gear.

SEVERAL OPERATIONS FOR MULTI-SPINDLE DRILLS.

The purchase of a highly efficient machine tool for railway shop work of special nature is sometimes postponed because the small amount of this particular class of work does not warrant the necessary outlay. It is usually the case, however, that a hint from a foreman or machinist may result in the adapting of the machine to many operations the consideration of which would alter the decision with regard to its purchase.

The accompanying illustrations are taken from photographs of the operation of a Foote-Burt drill in the Battle Creek shops of the Grand Trunk Ry.

Figure 1 shows a method of drilling the two holes in locomotive eccentrics in one operation. The same setting of the heads is maintained in shifting to the second eccentric, at the left. While one eccentric is being drilled the other is changed for a new one without loss of time. Tapping the holes is a similar operation.

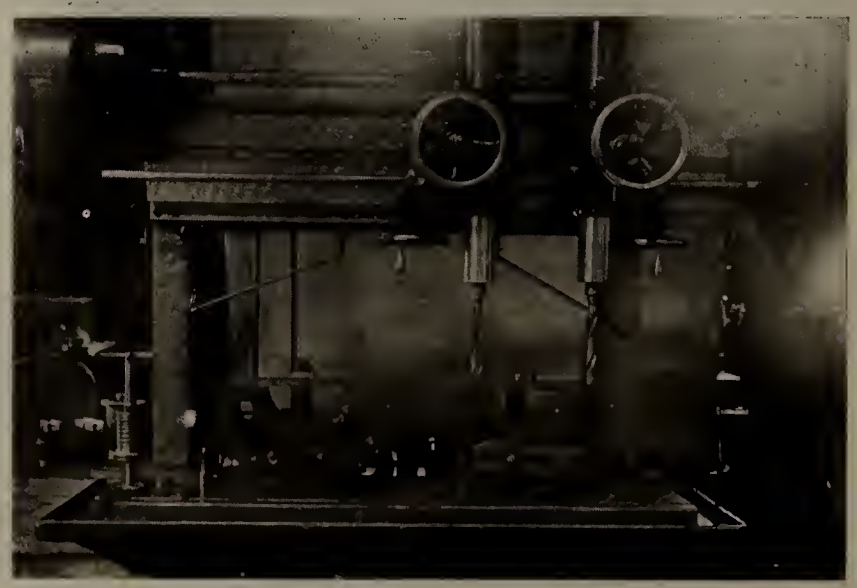

Fig. 1.—Drilling and Tapping Eccentrics.

Fig. 3.—Drilling Engine Truck Bolts.

Figure 2 is the illustration of an operation for drilling locomotive spring gear. Two sizes of drills are used at once, one hole being 1¾ inches, while the other is two inches.

Figure 3 shows a method for drilling engine truck boxes. The spindles are spaced at a fixed distance and the holes are drilled in alternation. The operation is a particularly speedy one, as the clamping of the work is much simplified.

A HALF TRUTH.*

By T. H. Symington.

A half-truth is sometimes worse than a total misstatement of facts, and a half-truth furnishes Mr. Louis D. Brandeis, lawyer, of Boston, an argument on which to build up a following in his attack on railroad operating efficiency in this country.

Mr. Brandeis' explanation of how $1,000,000 a day can be saved in the operation of American railroads is of interest and importance only because of the large number of American citizens who are unfamiliar with the facts, and who may form wrong impressions through the half-truths in his statements.

I will overlook the fact that by inference Mr. Brandeis assumes that the majority of our railroad executives are shortsighted and incompetent.

I am only competent to discuss one of the elements of saving proposed by Mr. Brandeis, namely, his statement that $50,000,000 a year could be saved in the one item of coal. He does not state that for many years this item of railroad expense has had the constant attention of the ablest engineers in this country. Some years ago the railroads invested many millions of dollars in compound locomotives in order to effect coal economy, only to find that the increased operating cost of the compound locomotives more than offset the coal saving and the compounds had to be abandoned. Most of the large railroads have for years been experimenting with mechanical stokers and other devices, and carrying on an extensive campaign of education among their locomotive firemen to reduce the consumption of coal. There is no one item of expense in the operation of railroads today that is receiving more general attention from railroad executives, railroad engineers, designers of locomotive equipment and inventors generally than this problem of fuel economy.

*First published in the Baltimore Sun.

Mr. Brandeis does not state that it is a financial impossibility to build a new railroad except with heavy grades, crooked lines and light equipment, with low operating efficiency, and the evolution to low grades, straight lines and heavy equipment, with high efficiency, must be gradual and come through surplus earnings. The big factors of expense must be first considered before we can get at the finer details of operating efficiency. In this respect a railroad is identical with any other business enterprise that can only gradually afford facilities and organization for economic operation.

Fortunately, the majority of the American people are satisfied with the progress made in efficiency by our railroad executives, who represent the survival of the fittest among the hundreds of thousands of able Americans who have made railroad operation their life work.

It cannot be denied, however, that Mr. Brandeis' half-truths are causing irreparable damage to the railroad and business interests of this country because of the crystallizing belief of his following that the railroads do not need any increase in rates, and because of the discrediting of our operating methods and the uncertainty and alarm created in the minds of railroad security holders in this country and abroad.

No one can deny that all real progress is secured through co-operation and harmony, nor can it be denied that criticism is only effective when it is constructive criticism.

It is true that our railroads are not operated at 100 per cent efficiency, and it is also true that all of our railroad executives have plans prepared for future capital investment in the identical facilities that Mr. Brandeis argues are essential for real economy. It is one thing, however, to know what facilities you need and quite another thing to get the money with which to provide them.

It may be true that we are not making sufficiently rapid progress toward 100 per cent efficiency of operation, and I am sure that all railroad executives would welcome a solution of this economic problem.

I believe that it would pay the people of this country at this time to take Mr. Brandeis' following seriously in the interest of harmony and progress. I would suggest that the government appoint an operating railroad commission, with Mr. Brandeis as chairman, and that the Interstate Commerce Commission select an average trunk-line railroad, with preferably difficult operating conditions and a poor credit, and turn this railroad over to the commission to operate for a period of 10 years.

Beyond question, we should for this period of 10 years give to the railroads generally the increase in rates that our present railroad executives all state is essential to the development and progress of their properties.

At the end of 10 years it might be possible for the government-operated railroad to set such a standard of operating efficiency that the rate question will automatically adjust itself to the satisfaction of both railroads and shippers.

It would, of course, be necessary for the government to guarantee the bonds and stock of the railroad thus taken over; and I am quite certain that this program would result in such a tremendous increase in the wealth and prosperity of the country at large that the government could well afford to pay the owners of the experimental property any damages, should such exist, that might result from this new method of railroad operation in the United States.

The Delaware & Hudson Co. is in the market for a 5-in semi-universal radial drill, a 16 ft. x 10-in. bed toolmaker's lathe, a 20-in. slide back geared pillar shaper, a 20-in. double spindle bolt-threading machine and a No. 4 high power milling machine. It is understood that this equipment is for the company's shops at Green Island, N. Y.

MALLET ARTICULATED LOCOMOTIVES, CHICAGO GREAT WESTERN R. R.

The Baldwin Locomotive Works has recently completed ten Mallet articulated locomotives for the Chicago Great Western R. R., J. G. Neuffer, superintendent of motive power. These engines, according to the railroad company's classification system, are known as "Class H-1," and they bear the road numbers 600-609. They have the 2-6-6-2 wheel arrangement, and are by far the heaviest locomotives in service on this road. The general design follows that of similar locomotives which have been operating with marked success, on the Western Maryland Ry.

The boilers of the Chicago Great Western locomotives have straight tops, with a minimum shell diameter of 86 inches. The construction of the boiler shell and fire-box presents no unusual features. The grate bars are divided into three groups by two longitudinal bearers, and are arranged to rock in six sections. Two drop plates are provided, and they are located at the back of the furnace, in the outside sections. The rear ash-pan hopper is divided and has right and left-hand sections placed outside the frames and under the drop plates; while the front hopper is placed between the frames. The hoppers have drop bottoms, and the ash pan can thus be dumped at three points. The front end has an unusually large netting area, with the adjustable diaphragm placed back of the nozzle. The stack has an internal extension, no petticoat pipe being used with this arrangement.

One of the New Mallet Locomotives for the Chicago Great Western R. R.

The steam distribution is controlled throughout by balanced slide valves, driven by Walschaert motion. The dome is centrally located above the high-pressure cylinders, and live steam is delivered through external pipes arranged in the usual manner. The receiver pipe is placed on the center line, and has a ball joint at the back end only. The center of the ball joint coincides with the center of the articulated frame connection; hence variations in the length of the receiver pipe are those due to temperature changes only, and to compensate for these a slip joint is provided. No reheater is used between the cylinders. The high-pressure cylinders are entirely independent of each other, while the low-pressure cylinder castings are bolted together on the center line of the locomotive. The valves are set with 3/16-in. lead on the high-pressure cylinders and 5/16-in. lead on the low pressure. The arrangement of the valve gears and power reverse mechanism is in accordance with the usual practice of the builders.

The main frames are of cast steel, the rear frames being in one piece, while the forward frames have separate front rails. The top rail is extended back over the leading driving pedestals and is held in place by seven bolts, each 1¼ inches diameter. The main bottom rail is cast in one piece with the frame, but is not extended to the bumper, the latter being braced to the cylinder casting by an auxiliary rail. The main frames measure 5 inches in width and the auxiliary front rails 4½ inches in width.

The equipment of these engines includes pneumatically operated cylinder cocks for the low-pressure cylinders, and force feed oil pumps for lubricating the same. The high-pressure cylinders and air pump are oiled from a lubricator placed in the cab, and a separate lubricator is provided for the power reverse cylinder.

Sand is delivered to the front group of wheels from two boxes placed over the forward deck plate, and to the back group from one large box placed over the boiler.

The tender frame is composed of 12-in. steel channels, with reinforced wood bumpers. The trucks are of the arch bar type, with double elliptic springs and steel bolsters. Solid rolled steel wheels are used in both the engine and tender trucks.

Further particulars regarding these engines are presented in the following table:

Gauge	4 ft. 8½ in.
Cylinderss	23 & 35 x 32 in.
Valves	Balanced slide
Boiler.	
Type	Straight
Material	Steel
Diameter	86 in.
Thickness of sheets	15/16 in.
Working pressure	205 lbs.
Fuel	Soft coal
Staying	Radial
Fire Box.	
Material	Steel
Length	117 in.
Width	96 in.
Depth, front	77½ in.
Depth, back	74 in.
Thickness of sheets, sides	⅜ in.
Thickness of sheets, back	⅜ in.
Thickness of sheets, crown	⅜ in.
Thickness of sheets, tube	½ in.
Water Space.	
Front	6 in.
Sides	5 in.
Back	5 in.
Tubes.	
Material	Steel
Thickness	No. 11 W. G.
Number	450
Diameter	2¼ in.
Length	21 ft. 0 in.
Heating Surface.	
Fire box	226 sq. ft.
Tubes	5540 sq. ft.
Total	5766 sq. ft.
Grate area	78 sq. ft.
Driving Wheels.	
Diameter, outside	57 in.
Diameter, center	50 in.
Journals	10½ x 12 in.
Engine Truck Wheels.	
Diameter, front	30 in.
Journals	6 x 12 in.

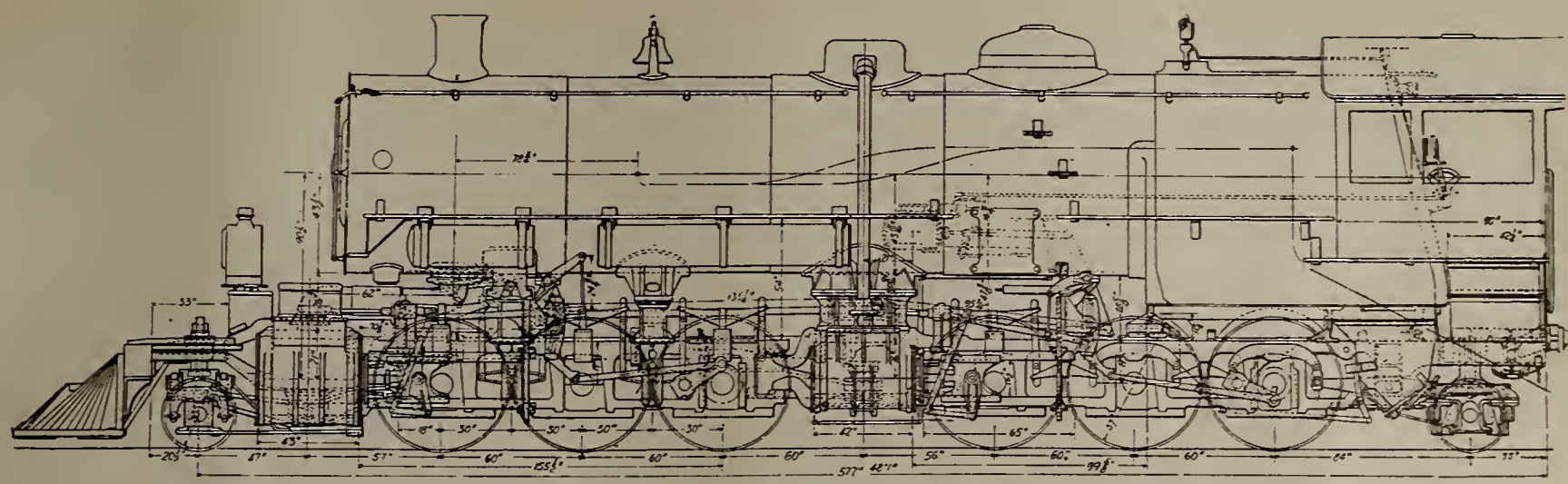

Elevation of Great Western Mallet.

Diameter, back	30 in.
Journals	6 x 12 in.
Wheel Base.	
Driving	29 ft. 8 in.
Rigid	10 ft. 0 in.
Total, engine	45 ft. 4 in.
Total, engine and tender	71 ft. 11½ in.
Weight.	
On driving wheels	307,000 lbs.
On truck, front	21,900 lbs.
On truck, back	24,200 lbs.
Total, engine	353,100 lbs.
Total, engine and tender, about	500,000 lbs.
Tender.	
Wheels, number	8
Wheels, diameter	33 in.
Journals	5½ x 10 in.
Tank capacity	8000 gals.
Fuel capacity	16 tons
Service	Freight

PRACTICAL APPLICATION OF LIFTING MAGNETS.*

By H. F. Stratton.

The lifting magnet owes its success and rapidly increasing use to its ability to handle quickly and cheaply the various raw, semi-finished, and finished iron and steel products. It is in the transportation of such material that great economies have been effected, and I recently estimated that during the year 1910 lifting magnets will have saved the iron and steel industries about one million dollars.

Before discussing the design and construction of magnets, it would probably be logical and pertinent to refer to the character of service which they encounter, and particularly to the extremely severe mechanical abuse to which they are subjected. For instance, a magnet weighing about two and one-half tons and picking up an average load of about a ton of pig iron, will, when used in the stock-yards of a steel plant, be called upon to make four lifts a minute for about twenty hours a day. The keynote of the steel business is tonnage and speed, and a magnet in a steel mill is operated solely with the idea of handling as much material as possible in a given time, and with no regard to the welfare of the magnet. A magnet may easily make a million lifts in the course of a year, and each time may be dropped into a pile of unyielding pig or scrap a distance of from five to fifteen feet. This necessarily means that the magnet is subjected to hammering and a series of impacts so terrific as not to be comparable with the service given any other piece of electrical apparatus. Magnets are almost always handeld by operators utterly ignorant of electrical matters, and frequently their use has been regarded by laborers with open hostility because of the fact that they have made many jobs superfluous.

Bearing in mind, then, the extraordinary roughness with which lifting magnets are used, the necessity of certain points of design will be appreciated, and indeed it will be seen that many of the structural features are merely a response to the demands of hard service, and are therefore in the nature of natural evolution of design.

Essentially, the commercial lifting magnet of today consists of a disk-shaped steel casting having in it an annular recess for the accommodation of the magnet coil, an energizing coil with many thousand ampere turns to build up a magnetic field, suitable terminals for connecting the coil to the line, chains for the suspension of the magnet, and a non-magnetic bottom to hold the coil in its annular recess, to hermetically seal the bottom of the magnet, and to constitute a shield or guard for the hammering to which the magnet bottom is subjected. An auxiliary device is the magnet control for quickly energizing and de-energizing the coil. The steel shell must be made of special steel, soft and carefully annealed so that the magnetic field can be quickly built up and quickly torn down. This steel shell should be ribbed over its entire external surface to allow for the rapid dissipation of the heat which is generated in the coil.

The problems of coil design, coil anchorage, and coil protection are many and perplexing. The coil is wound on a brass or aluminum spool, copper tape about ¾ of an inch wide being employed. The insulation between adjacent convolutions is secured by feeding in asbestos tape as the copper tape is wound. Four or five layers constitute one coil, and the insulation between layers must be good from both mechanical and electrical standpoints. After the coil has been completely wound it is clamped to a seat on the spool by means of vertical bolts and horizontal radial straps so that the coil and the spool form an integral unit. The coil is next treated to an impregnating process which is as follows: The coil is placed in a large iron vessel which is hermetically sealed. About a 82-inch vacuum is then created in this vessel and the temperature is kept in the neighborhood of 300 deg Fahr. The coil is kept in this condition for a number of hours until all the entrained moisture is completely expelled. Without first removing the vacuum, the vessel is filled with a hot, inert, insulating, impregnating compound which completely saturates the entire coil structure.

After the impregnation process has continued for several hours under high pressure and high temperature, the impregnating vessel is unsealed and when the temperaturre has dropped sufficiently the coil is removed. It is now a solid mass of copper, asbestos, mica and impregnating compound

This impregnation accomplishes two very important advantages—first, it seals the coil so as to assist in the exclu-

*Abstract of lecture before Ithaca Section A. I. E. E.

sion of moisture; and second, it provides for much better conduction of heat from the coil to the magnet case, from where it can be dissipated to the surrounding air.

The coil is next put in place in the magnet shell, and here particular pains are exercised to make sure that all joints shall be watertight. The coil spool is machined all over and it mates with machined surfaces on the magnet shell. It is fastened home by numerous screws closely pitched, these screws being drawn up with a uniformly high twisting effort.

The bottom of the magnet now consists of the portions of the steel projecting downward as poles and the brass or aluminum flange which is part of the coil spool. Brass or aluminum, however, would not stand two days of steel mill service. Therefore a shield is put over the brass or aluminum plate, this shield being made of manganese steel. Manganese steel, when containing the proper proportion of manganese, is non-magnetic and fortunately is extremely hard and strong. It is, in fact, so hard that after years of service it shows no appreciable wear, but only a polishing. A manganese plate cannot, of course, cover the poles of the magnet, since that would introduce permanent gaps between the poles and the load, and would thereby decrease the lifting capacity of a magnet. Therefore the poles must project right down to the load and must be of the same kind of steel as the magnet shell. These steel poles, however, are worn away at the rate of about an inch every six months. Therefore, for the sake of renewal, and for other reasons, these should be separate, so that when excessive wear has resulted it will not be necessary to renew the entire magnet shell, but merely these pole tips.

Even the method of holding these tips in place has to be considered carefully and is interesting. Through bolts are employed, the heads being sunk in recesses cast in the pole tips, and the bodies projecting clear through the magnet so that the threaded portions come at the magnet top. Nuts are then put on the bolts, and these nuts are so located that they are almost entirely protected from any abuse. They can therefore easily be removed after the magnet has been in service for months or years. If the nuts were put on the bottom they would soon become marred and riveted so that the removal of the bolts would be impossible without actually cutting the heads off. The method of bringing out the coil terminals furnishes another illustration of where the design has been a matter of logical evolution.

The magnet shell is designed so that there will be three openings on the top; two of these are employed for bringing out the terminals, there being one terminal in each opening. Strip copper is led out from the coil and is folded back and forward on itself two or three times to provide flexibility, and its end is then anchored to a terminal stud. This forms part of the terminal connection which is led out horizontally through an opening in the magnet cavity, and makes connection with a bolt terminal connection.

After the magnet has been completely assembled, heated impregnating compound is poured in the openings at the top of the magnet until it completely fills the interior of the magnet and its level reaches to the top of the terminal cavities. All three of the cavities are then sealed tight with casting bolted down on top of them. These castings, however, carry check valves which open outward and which allow the escape of any vapors generated inside of the magnet, or allow the escape of the impregnating compound itself should its volume under the influence of heat expand to such an extent that it exceeds the volume of free space inside the magnet.

The impregnating compound is practically solid when cool, but when heated to the operating temperature of magnets becomes semi-fluid and expands in volume ten or fifteen per cent. One of the principal purposes of the three openings on the top of the magnet is to provide reservoir capacity for the ebb and flow of the impregnating compound as it expands and contracts due to heating and cooling. There must be sufficient reservoir capacity in these three risers so that when the compound is cold it will completely submerge the coil in all internal terminal details, and there must be sufficient space in these risers so that at ordinary operating temperatures the expansion of the compound will not cause any of it to be ejected.

It is apparent, from what has been said, that great pains are taken to exclude moisture from the coil or terminals and this point must be continually kept in mind in the design of the magnet bottom, the design of the terminals and in the method of surrounding the coil with impregnating compound.

Until a few years ago magnets were supported by chains fastened to eye-bolts screwed in the top of the magnet. The dimensions of these eye-bolts were made several times larger than would be required to carry any conceivable load which might be imposed upon them, but in spite of this precaution, the breakage of eye-bolts was frequent and troublesome. The magnet, suspended from a crane, would frequently swing back and forth and would sometimes strike the bottom of a steel car or a heavy steel ingot directly on one of its eye-bolts and this heavy side shock would shear off the bolt. Several years ago at the suggestion of Mr. Palmer, then electrical superintendent of the Jones & Laughlin Steel Co., the use of cast steel suspension lugs of the type which is now standard on lifting magnets came into practice. These lugs are made very strong, and are of such contour that it is almost impossible for them to receive anything except a glancing blow, and it can be truthfully said that their use has eliminated all of the troubles formerly experienced with eye-bolts.

Nearly all of the features of design which have been so far mentioned might be looked upon as elaborations on the theoretical lifting magnet. They are necessary to meet the peculiar and severe conditions of service, and indeed it is only by the development of these structural features that the magnet has come to be a commercially successful piece of apparatus. Before leaving this phase of the matter, we may summarize the foregoing as follows: First, magnets are subjected to abuse more severe than any other piece of electrical apparatus, and second, it is highly important, even necessary, that the magnet should be so designed mechanically, that it will continue to work all day and every day under these conditions of service.

From an electrical and magnetic standpoint, the lifting magnet is, of course, relatively simple. It consists essentially of an energizing coil and a steel casting constituting an incomplete magnetic circuit, which is partially or completely satisfied when iron or steel load bridges the air gap.

Since the circuit is highly inductive, particularly when the load consists of steel billets or ingots, thereby making a very good magnetic circuit, a perceptible length of time is required to build up and to tear down the magnetic field. The current change in the coil when the circut is established and then broken, depends upon whether the circuit is broken by placing a discharge resistance across the magnet terminals, or by completely rupturing the circuit. With a discharge resistance, the current dies away with marked slowness, but when the circuit is opened current persists only as long as the arc exists at the switch. Obviously using the discharge resistance means that the load will not be released with sufficient promptness, but it might be thought that opening the circuit would allow the instantaneous dropping of a load. It must be remembered, however, that though the current has dropped to zero, the magnetic field has not necessarily been completely torn down; as a matter of fact, there is some delay or pause in dropping the load, even

Lifting Magnet of Large Capacity.

with the complete rupturing of the circuit. Therefore, to provide for the rapid release of the load, a scheme has been devised whereby current through the magnet is reversed. This reverse current, however, is small in value, and while it readily tears down the magnetic field, it is not sufficient to energize the magnet to such an extent that it will retain the load.

Different types of magnets are used for handling different characters of material. For pig, scrap, wire and tin, sheared plate, rail and ingot crops and similar material piled indiscriminately, the round type magnet has so far proven to be the most satisfactory.

For handling material like rails, billets, etc., which are generally piled evenly and regularly, a flat type, or what we term the "Bi-polar" type of magnet, has proven to be the most satisfactory. With this kind of a load, which is excellent from a magnetic standpoint, enormous lifts can be made. There have been installed at various rail mills throughout this country, magnets which in pairs have handled as many as nineteen 60-foot rails of a total weight of 30,400 lbs.

Flat type magnets are also used for handling iron and steel sheet plates, although this is one of the most difficult applications of lifting magnets. These plates are generally long and thin, and therefore limber. They do not offer sufficient cross section to make the magnetic attraction very strong, and the tendency is for the plate to pry away from the poles at the edge of the magnet. This introduces an air gap and weakens the initial grip, and unless the magnets are amply strong, the plates will gradually tear themselves away from the magnets and drop. On account of this bending of the plates, they are practically always handled by magnets in groups of from two to six magnets, the magnets being supported by a spreader beam. However, plate handling by means of magnets is being carried forward in a number of places successfully and in an interesting manner. Magnets have been furnished to the Imperial Shipyards of Japan for handling ship plate, and these magnets were so constructed that they at first picked up the plate when in a horizontal position; the magnets were then free to rotate through ninety degrees so that the plate was in a vertical position and ready to be installed on the battleship in its proper location. At the plant of the Illinois Steel Co., Chicago, plate magnets have also been installed, and at this plant the skill of the operators in the handling of plates is very marked and interesting. They sometimes pick up three or four plates at a time and by momentarily opening the circuit, allow only one plate to drop, re-establishing the circuit before the balance of the plates have freed themselves from the magnet.

In designing magnets for any character of service, due attention must be given to the total number of ampere turns, area of the magnetic circuit, area of the cross section of the load, area of the poles, and the proper proportions between all of these factors. It would be almost impossible to lay down any laws governing these points of design, and the selection of the correct electrical and magnetic characteristics cannot be reached by purely theoretical considerations, but must be influenced to a very great extent by systematic tests and previous experiments in magnet design.

The question of safety is frequently raised, and during the time when the magnet was being commercially introduced, its use was frequently combated on the score that it was dangerous to workmen. Of course it cannot be denied that if a man is standing under a magnet that is carrying a load and the circuit is interrupted, something is going to happen to that man. I maintain, however, that it is safer to use a magnet for the transportation of material than to use chains, for several reasons. First, the magnet is inherently a labor-saving device, and when it is used the number of laborers in its vicinity is largely reduced and frequently the magnet entirely displaces ground labor. Second, a laborer always looks upon a magnet with a high degree of suspicion, since there is nothing tangible to hold up the load, and he avoids getting under a load supported by a magnet more than he would getting under a load supported by chains; in other words, he uses more caution. Third, the accidental opening of a magnet circuit probably does not occur as often as the slipping or breaking of chains supporting a load.

A SUGGESTION CONCERNING SIDE ROD STRAINS.

By W. O. Moody, M. E., Ill. Cent. R. R.

Experience with side rods in fast service seems to develop more trouble with six coupled engines than with those of the four coupled type, assuming in each case that rods are of similar design and properly proportioned to the loads imposed.

If the rods were of uniform section from pin to pin, the curve of the neutral axis would assume the form as indicated by the solid line "b-b" on the accompanying sketch, which has been purposely exaggerated to better facilitate illustration. In practice, however, we meet with the heavy rigid Midale connection coupled through the medium of the knuckle pin to its neighboring rod. The upward or down-

ward action of the rod "h," designated as front on the print, has a tendency to force the knuckle pin either below or above the center line of the rods due to the force of gravity.

The action of back rod "e" at the same time has a tendency to resist this movement of the knuckle pin at certain periods of the stroke, and in so doing will force that part of the rod at the middle connection to an approximately hori-

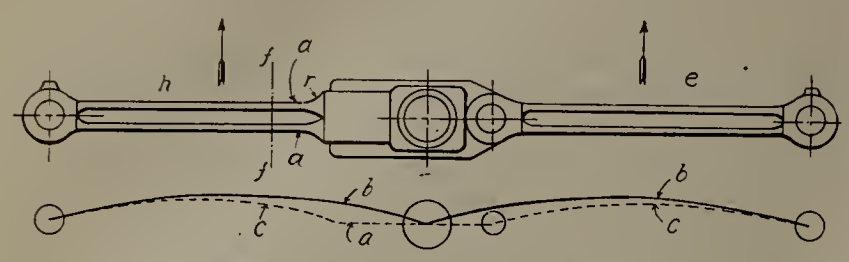

Sketch Showing Side Rod Strains.

zontal position, inducing bending strains at or near the point "a" on front rod "h." The curve of the rods under this condition is indicated by the lower dotted line "c-c."

We find that side rods on six-coupled engines in high speed service develop cracks near point "a" occasionally in the flange and again in the web of I-beam type of rod. To minimize this action the knuckle pin should be as close to crank pin as design will permit, while the web of the body of rod should be thickened from about "f" toward the strap and a large sweeping radius be used at "h."

In connection with above, I would appreciate receiving the opinions of others regarding the theory of this action.

RECENT PROGRESS IN AIR BRAKE APPARATUS FOR ELECTRIC AND STEAM ROAD SERVICE.

By S. W. Dudley.

The development and progress of the transportation facilities of this country have by no means lagged behind the continuous and rapid growth in other directions during recent years. New conditions have created new requirements so important as to demand better roadbeds, bigger locomotives, special types of motive power apparatus, heavier cars, higher speeds, and, as a natural consequence, a necessity for improved appliances for controlling train movements.

It may be fairly stated that the last twelve months have witnessed the satisfactory solution of some of the most difficult problems which have thus far arisen in connection with the controlling of electric and steam railroad trains. The general and fundamental characteristics of the improved forms of air brake apparatus required by the intensive demands of modern traffic have been clearly established, reduced to practicable form and introduced to such an extent and for such a period of time as to insure their permanency and capacity to satisfactorily meet the general operative requirements of the future as far as they can be anticipated.

There remain, however, certain special classes of service or extremes of operating conditions requiring greater specialization of apparatus in order to provide for maximum convenience, economy and safety of operation. It is with reference to such instances rather than in the further development of the general functional features of the air brake system, as a whole, that the most notable progress of the past year has been made.

These more specialized developments may be classified as follows:

1. The electro-pneumatic brake system for controlling the air brakes on electric trains (such as used in elevated and subway service) by means of electrically actuated valves.

2. The automatic car and air coupler, providing for the connecting and locking of the car and air connections simultaneously and automatically, developed with particular reference to electric train service.

3. The governor synchronizing system for insuring a proper and equal distribution of the labor of supplying compressed air for braking and other purposes between two or more motor-driven air compressors that may be associated in the same train.

4. The control valve brake equipment—an improved pneumatic brake containing a number of novel and advantageous features particularly designed to meet the requirements of heavy, high speed steam road passenger service.

5. The "empty and load" brake for freight service; designed to provide braking powers for loaded freight cars more nearly proportionate to those realized on empty cars, than can be secured with the standard form of freight car brake.

The Electro-Pneumatic Brake

The electro-pneumatic brake, while by no means a new type of brake apparatus, has been developed and perfected during the past year to a point which established it as a wholly practicable and the most nearly perfect brake system yet devised for controlling trains operating under the severest conditions. To the fundamental and most improved type of purely pneumatic brake, the addition of electrically actuated valves affords means whereby the brake may be controlled electrically in applying and releasing for ordinary service operation. The promptness, uniformity and sensitiveness of the brake action made possible by this form of control afford a maximum of simplicity, convenience and economy in train service where frequent and quick stops must be made. The addition of these features to the pnenmatic form of equipment, without disturbing the pneumatic features of the brake in any way, adds a safety and protective feature to the combination, which is of the utmost value as insurance against loss of brake power. That is to say, with the electro-pneumatic form of brake equipment the brakes can be applied and released through the medium of the electrically controlled application and release valves without in any way detracting from the responsiveness or efficiency of the pneumatic side of the equipment, should the power fail, or should it, for any reason, become necessary to operate the brakes pneumatically instead of electrically. These features of the electro-pneumatic form of brake equipment have been characteristic of previous development in this type of apparatus, but have been combined and extended to a considerable extent in the recently perfected form of this equipment.

In addition, there have been new features added which largely increase the safety and efficiency of this form of equipment. The most important of these is the electric transmission of quick action to the brakes on all cars in the train in emergency applications. This insures simultaneous and instantaneous application of the brakes on every car to their maximum power, resulting in a gain of about one second and one-half in the time of obtaining maximum braking power on all cars of a ten-car train as compared with the best which could be obtained from the most improved form of pneumatic emergency brake. This saving in time is of great value where the service is congested and the speeds relatively high.

The difference between the maximum service braking power and the maximum available for emergency applications has been considerably increased to afford the greatest possible retarding effort when needed, that is consistent with freedom from wheel sliding.

The valves which have to do with producing the quick action application of the brakes are separated from those which are operative in ordinary service applications, with a resulting improvement in freedom from trouble on the road, due to quick action being obtained when not intended. All of the previous types of brake equipment were more or less

subject to inconvenience from this source under certain conditions of incorrect manipulation, lack of proper maintenance or adjustment, weather conditions, etc.

The electro-pneumatic brake is at present standard on the cars of the Philadelphia Rapid Transit Company, the Interborough Rapid Transit Company subway, the Hudson & Manhattan tunnel system and the Boston Elevated Railroad.

While the electro-pneumatic brake has been developed with particular reference to the necessities of short-headway, high-speed electric train service as exemplified in the subway and elevated systems just mentioned, its advantages are of equal importance in steam railroad service, particularly where the conditions of operation approximate those of these electric installations.

The advent of train lighting by electricity and the rapid increase of knowledge of and experience with electrically operated devices in steam railroad service are bringing about conditions highly favorable to the introduction of electro-pneumatic apparatus wherever its superior operative and mechanical features are demonstrable. This phase of the situation has been constantly in mind during the development of the recent improved type of electro-pneumatic brake apparatus, with the result that in its final perfected form, the electro-pneumatic brake is capable of extension to any degree required by present or future demands, in either electric or steam road passenger train service, so far as can be at present foreseen.

The Automatic Car and Air Coupler.

Various more or less successful forms of automatic connectors for making drawbar and air hose connections at the same time and automatically have been in service for some time, especially in electric traction service. During the past year, however, a form of this device has been developed which contains certain improved features adaptable particularly to the conditions of subway or elevated service. Under the extremely severe requirements of such service as that of the Interborough Rapid Transit Company in New York, it becomes imperative that absolute protection against accidental uncoupling of the drawbars be secured, which can best be done by the substitution of an unfailing mechanical device, which at the same time affords a vastly increased protection to the railroad employes against unnecessary danger to life. The automatic coupling of the car and air connections has further distinctly economical advantages in the direction of time and maintenance by reducing the time required to make up trains at terminals or couple to or uncouple from cars en route, and by reducing the cost of operation by saving the wear and tear on flexible hose connections. Furthermore, when coupled, all slack between cars is eliminated, (multiple-unit motive power trains permitting this desideratum which is impracticable with trains hauled by a locomotive at the head end), thus insuring against shocks in starting and stopping and largely reducing the possibility of damage to equipment and discomfort to passengers.

The improved form of automatic car and air coupler is being applied to all of the cars of the Interborough Rapid Transit Company's Subway Division, and has already given ample proof of its efficiency under the extremely severe conditions imposed in this service.

The Governor Synchronizing System.

This system has been perfected during the last year, and is the most satisfactory and efficient apparatus for the purpose yet devised. Heretofore, in the operation of electric trains containing two or more motor cars, more or less difficulty has been experienced in securing an equitable division of the work of supplying the compressed air required for braking and other purposes among the different motor-driven air compressors included in the train. The result has been that some compressors are overworked, while others are not working up to their full capacity. Such an inequality of compressor operation naturally results in increased wear and tear on the overworked compressors, as well as an actual decrease in the available air supply under certain conditions, due to the attendant loss in the efficiency of compressor operation. A number of different schemes for overcoming this difficulty have been tried out. Some have proved quite satisfactory for certain classes of service, but, until the perfection of the governor synchronizing system, there seemed to be no generally satisfactory method of accomplishing the desired results with a uniform type of apparatus applicable to all classes of vehicles and conditions of service operation.

Briefly stated, the characteristic features of the governor synchronizing system are as follows:

The current supply to the motor of each motor-driven air compressor in a train is controlled by a switch, operated by air pressure as in the ordinary form of electro-pneumatic governor previously used, except that the cutting-in and cutting-out of this switch is controlled by the operation of a magnet valve instead of a pneumatic regulating portion connected to main reservoir pressure, as is the case with the ordinary compressor governor. In the governor synchronizing system, this switch is called the compressor switch. In addition to the compressor switch, a pneumatically controlled switch called a master governor is used on each motor car similar in all respects to the previously used electro-pneumatic compressor governor, except that instead of controlling the current supplied to the motors of the motor-driven air compressors, it acts simply as a pilot or master switch to control the magnets which operate the compressor switches. The magnets of the compressor switches are connected in parallel between the trolley (or positive battery terminal) and a wire, called the synchronizing wire, which runs the entire length of the train. The cutting-in of any master governor connects the synchronizing wire to ground (or negative battery terminal) and thereby operates all the compressor switch magnets. All the main reservoirs in the train are connected by means of a main reservoir line pipe running the entire length of the train and connecting to the pneumatic controlling portion of each master governor. With all the compressors cut out, the pressure in this line being equalized, as soon as this pressure is decreased to a point at which any one of the master controlling mechanisms operates, the closing of this master governor switch supplies current to the magnets of each compressor switch in the train, causing them to operate so as to cut in these switches and start all the compressors simultaneously. Whether one or more of the master governors cuts in at the same time is immaterial, since the compressors will continue to operate and raise the pressure in the main reservoirs on each vehicle, and in the main reservoir line throughout the train, until such time as the controlling portion of the last master governor remaining cut in operates to open the circuit to the compressor switch magnets, which causes all the compressor switches to cut out and stop the operation of all the motor-driven compressors simultaneously. It will be seen that in this way all the compressors are forced to operate the same length of time and since the main reservoir pressure is equalized on all vehicles, the stronger compressors help the weaker ones to the extent of insuring the necessary amount of compressed air being supplied at the expense of a minimum amount of energy, time, and wear and tear on the apparatus.

The Control Valve Equipment

This type of equipment, marking the latest perfected development in the art of braking heavy passenger trains, is a

new form of apparatus, fundamentally designed to provide an adequate brake for the heaviest passenger cars now operated or which may be built. During recent years the weights of sleeping and dining cars especially have begun to exceed the capacity of the largest single brake cylinder arrangement, and, as a result of special study of this problem, the control valve equipment was evolved to obviate the necessity for applying two single cylinder duplicate sets of apparatus per car, and to improve certain features inherent in the standard brake design which tend to reduce brake efficiency to a considerable degree when applied to the heaviest types of rolling stock.

Not only were the factors of weight, work to be done per unit of brake shoe area, lower efficiency of foundation brake gear, etc., aggravated to a marked degree, but limiting conditions were encountered in other directions. The capacity of the largest single cylinder (18 inches in diameter) was exceeded, even with the highest brake cylinder pressure that could be permitted. It was generally recognized that a larger size brake cylinder would be impracticable from a manufacturing, operating and maitenance standpoint. A higher pressure than the standard 110 pounds, or a greater increase in the leverage ratio of the foundation brake rigging, above the recommended 9 to 1 maximum value, was impossible with the type of equipment in general service. These and other mechanical limitations barred further progress in the directions previously followed, and a general recognition of the serious nature of the problem confronting the railroads and brake manufacturers resulted in a joint conference and discussion at which representatives of the Master Car Builders' Association and railroads from all parts of the country were present, at Union Station, Pittsburg, Pa., in the late summer of 1909. The tentative recommendations of this meeting were reduced to practice and its conclusions confirmed in a series of high speed passenger brake tests, inaugurated and successfully carried out by the Lake Shore & Michigan Southern Railroad on its main line near Toledo, Ohio, during the fall and early winter of 1909. The fact that these tests were made with the heaviest classes of modern rolling stock, under road conditions representative of the best of modern railroad practice, and the scientific and comprehensive manner in which the tests were conducted and the results analyzed and at once put into effect, give these tests a position of importance second only to the classic Westinghouse-Galton Brake Trials in England during 1878 and 1879.

From a study of the results of these tests, it became evident that, in the first place, two brake cylinders per car were required to provide the necessary power for controlling the heavy types of cars which had to be reckoned with, and, in the second place, suitable valve mechanism was required for properly controlling the operation of these two brake cylinders and securing certain desirable operative functions heretofore impossible with previous forms of passenger car equipment, as well as permit of ready extension as still more severe demands might arise in the future. These considerations led to the development (during the progress of the tests referred to) of what is known as the "PC" brake equipment, which uses in place of the ordinary triple valve, what is known as a control valve, providing the following features of operation:—1—Automatic in action. 2—Efficiency not materially affected by unequal piston travel or brake cylinder leakage. 3—Prompt serial service action. 4—Graduated release. 5—Quick recharge and consequent ready response of brakes to any brake pipe reduction made at any time. 6—Predetermined and fixed flexibility for service operation. 7—Full emergency pressure obtainable at any time after a full service application. 8—Full emergency pressure applied automatically after any predetermined brake pipe reduction has been made after equalization. 9—Emergency braking power approximately 100 per cent greater than the maximum obtainable in service applications. 10—Maximum brake cylinder pressure obtained in the least possible time. 11—Maximum brake cylinder pressure maintained throughout the stop. 12—Brake rigging designed for maximum efficiency. 13—Adaptable to all classes and conditions of service.

All the novel functions mentioned are incorporated in the new device in sueh a way that the requirements of interchangeability with existing apparatus have been fully satisfied.

The "Empty and Load" Brake Equipment.

This type of equipment, while designed with particular reference to the handling of loaded freight cars on grades, has also the same fundamental advantages for baggage and express cars, or for any railroad vehicle which may be classed as a load-carrying car. It will readily be seen that the necessity for operating such cars empty as well as when loaded, requires that the brake shall not be too powerful for the empty weight of the car. Otherwise, wheel-sliding and damaging draw-bar stresses will result.

Various schemes have been proposed and experimented with to a greater or less degree whereby a variable braking power can be obtained, commensurate with the weight carried on the wheels, which will automatically adjust itself to the condition of the car whether it is empty or loaded. While the great desirability of such a form of brake apparatus has long been recognized by all familiar with the handling of this class of service, there have been mechanical or operative objections to all of the schemes thus far proposed, or certain desirable features have been lacking.

In the form of "empty and load" brake apparatus, which has been perfected during the last few months, advantage has been taken of a broad knowledge of the fundamental principles affecting the operation of braking apparatus from its earliest to its latest forms and of accumulated experience with a number of different types of "empty and load" equipments under a great variety of conditions, with a result that the equipment has been reduced to the minimum number of parts and complication of apparatus consistent with the fundamental features of operation desired.

Two brake cylinders are used, one for the empty car and both together when the car is loaded to say two-thirds or more of its rated capacity. Practically the same mechanism is used to control the operation of these two cylinders, except that an additional change-over valve mechanism is added for cutting the "load" brake in or out, either manually, or, under certain circumstances, automatically. The only addition to the foundation brake gear is that required to connect the "load" cylinder with the standard lever arrangement which is still used in connection with the "empty" side of the equipment. On the empty car the operation of the equipment is similar to that of the present type of freight apparatus employing what is known as the type "K" triple valve. When the car is loaded to two-thirds or more of its rated capacity, the "load" side of the equipment is cut in by hand, and the operation of the brake is thereafter that of the "load brake" until manually changed to "empty" or until the air pressure is entirely exhausted from the system.

Moreover, the combining of an automatic change-over from "load" to "empty" on total depletion of the pressure in the air brake system, with a manual change only from "empty" to "load," insures that the brake will always be set for "empty" on the empty car and remain so unless intentionally changed to "load" when the car is loaded. Means are provided so that the device can be locked in either "empty" or "load" position, where it will remain until unlocked and manually changed.

At present this form of brake equipment is being applied particularly to mountain grade service where the capacity of the road is limited by the amount of tonnage which can be safely handled per train down the grade. For such a condition the "empty and load" form of brake makes it possible to increase the traffic capacity of the road to a considerable extent at a relatively small increase in cost.

It will be recognized, however, that this form of equipment possesses important operative advantages in the direction of greater uniformity of braking effort with empty and loaded cars mixed in the same train, thus largely eliminating shocks and consequent delays and damages to equipment and lading, which now assume enormous proportions. These and other characteristics make it the logical and ideal type of apparatus for load-carrying cars in any kind of service.

GENERAL LAYOUT FOR A MODERN LOCOMOTIVE REPAIR PLANT.*

By H. H. Maxfield.

The great weight of the modern locomotive, and the desire to concentrate the heavy repairs to same, has resulted in the building of many new shops. While all of the shops thus far built have resulted in economy and efficiency as regards the maintenance of equipment, it is probable that very few, if any, have fully come up to the anticipation of their designers, and even in the case of the few, there are undoubtedly many features of the layout which experience shows could, with advantage, be modified.

The following general scheme of a modern locomotive repair shop is the result of experience with one of the more recent of the modern shops.

It has been the endeavor to indicate the various steps leading up to the final plan, and to give, as briefly as possible, the reasons governing same.

The first thing to be determined is whether the erecting shop should be of the longitudinal or cross type. It is assumed that the size and shape of the property available, which has a decided bearing upon this question, is such that it is possible to put up either a cross or a longitudinal shop. For the purpose of this paper it will be assumed that a longitudinal shop is decided upon.

The next to be determined is the location and general scheme of the machine shop. This shop should house, not necessarily under one head, besides the machine department proper, the vise, air brake and brass, sheet iron, tin and copper, and pipe departments. All of these are of necessity intimately connected with the erecting department in their work, and not only should be adjacent to same, but should be under the same roof.

The next department to be considered is the blacksmith. This department is principally a feeder of the machine department. It, therefore, should be close to it. It should also be close to the power house, for it is a heavy consumer of steam, and practically the only consumer of steam in an electrically driven shop. It should consequently be located between the machine department and the power house.

Coming now to the boiler shop, it will be conceded that inasmuch as there is a great deal of boiler and tube work done in the erecting department, this department, if for no other reason than ease of supervision, should be close to the erecting department. It should also be so located as to avoid unnecessary time and labor being consumed in transferring boilers and tubes between it and the erecting department. The most convenient location for such a building would be as a continuation of the erecting shop. It should not be under the same roof on account of the incessant din. It is best located by placing it in a line with the erecting shop, but removed from same a reasonable distance. The middle track of the erecting shop should be continued through the boiler shop, in order to afford an easy method of handling boilers and tubes between these departments.

The paint department is one which in the rush of repairing locomotives is not given much consideration. Practically all of the locomotive painting is done in the erecting shop, and a large proportion of the tender painting, other than varnishing, is done in the boiler shop. It does a good deal of work in connection with the wood department, especially as regards cabs, pilots and miscellaneous work. It should therefore be adjacent to the wood department, and reasonably near the boiler and erecting departments. This can best be accomplished by housing the paint and wood departments under one roof, and placing a fire wall between same.

A most important department to be located is the stores department. This, of course, should be convenient to every department, but, as this is practically impossible, it will have to be located with reference to the largest consumers of material stored therein, which are the erecting, machine, vise, air brake and brass, sheet iron, and tin and copper departments. It will be best located by placing it alongside of the erecting and machine shop building on the opposite side from the smith shop.

The location of the scrap bins will depend to a great extent upon the size and shape of the property available. At its best it is an unsightly proposition, and for this reason the scrap bins should be located outside of the area bounded by the main buildings. They should be reasonably accessible and should be reached by trucks and cars from either end of the shop yard. If we locate the longitudinal center line of the scrap bins some distance beyond the outside line of the power house building, we will have reached a satisfactory solution of the problem.

In the location of the office building, if a separate one is provided, the main essential is that it should be reasonably accessible to all the shop departments, and as convenient as possible to the main entrance of the plant, so that visitors and applicants for work can, if desired, be kept out of the plant proper. It should also be located so that the private office commands a fair view of the plant in general. These conditions can perhaps best be met by placing it in line with the storehouse and about twenty-five feet in advance of the line formed by the ends of the boiler, wood and paint, and oil house buildings.

The only satisfactory way to handle locomotive after-trial work is to provide a separate building for this purpose, making it an auxiliary of the erecting shop, and under the supervision of that department. This auxiliary shop, or after-trial shop, as I prefer to call it, should be reasonably close to the erecting shop, and yet far enough away to prevent the escaping smoke and gases from flooding the other buildings. It should be adjacent to the track upon which engines are tried, and also adjacent to the track over which incoming engines pass. Alongside of this building should be a coal platform and an ash pit. If we locate this building about 200 ft. from the far end of the erecting shop, and about 200 ft. to one side of it on the storehouse side, the various conditions mentioned above will be met.

It will be noted that we have a rectangular space between the ends of the storehouse and the erecting and machine shop, smith shop and power house on one side, and the boiler shop, wood and paint shop and oil house on the other. The width of this space or street is a matter of choice, but it should not be less than 80 ft., and it is preferable, as a matter of appearance, to have it 100 ft.

The space formed by the side of the erecting machine shop and the boiler shop on the one hand, and the store-

*Abstract from a paper read before the New York Railroad Club.

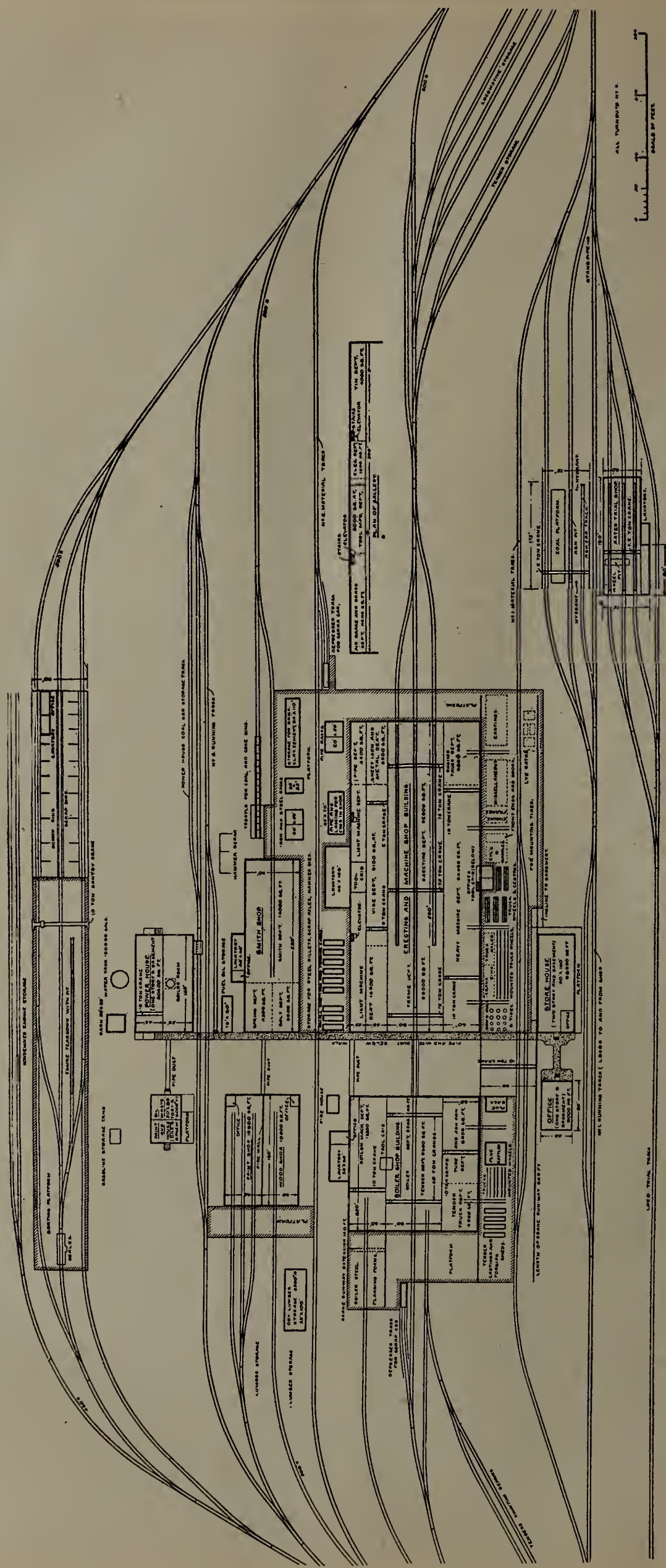

Model Locomotive Repair Shop Layout.

house and office building on the other, should be served by a traveling crane for the purpose of handling material. This space should be not less than 90 ft. wide to allow for the necessary tracks, platforms, etc. Between the erecting and machine shop and smith shop buildings should be a space of 80 ft. to allow of tracks, storage of material, etc. The same distance should be allowed between the boiler shop and wood and paint shop.

The width of the various buildings should be about as follows:

1. Erecting shop, 90 ft. center to center of columns. This allows of three tracks spaced 30 ft. center to center, upon all of which locomotives can be repaired, and, in addition, locomotives can be carried between these tracks without danger of interference.

2. Machine shop bays, 60 ft. center to center of columns. This allows ample aisle room and a sufficient crane runway space betwen the machines.

3. Boiler and tank shop building. This being, in a sense, a continuation of the erecting and machine shop building, will be of the same cross section.

4. Smith shop, 90 ft. center to center of columns.

5. Paint and wood shop building. The building should be 180 ft. deep, which will allow ample space for six tenders on each track.

6. After-trial shop. This shop will require a maximum space of 75 ft. in width, while the coal platform and ash pit, etc., will require practically the same.

7. Storehouse, 60 ft. center to center of columns. This will allow adequate bin and aisle space.

8. Office building. This building should have a width of 50 ft.

9. Scrap bins. These will require a space of 90 ft. in width, making due allowance for necessary tracks, platforms, etc.

There is no doubt but what the weight of evidence is in favor of the erecting bay being in the middle with the machine bays on either side. Experience with such an arrangement confirms this.

The light machine shop department requires only partial crane service. This is advantageous, for it allows of a gallery being put in this bay, running the full length of the building, the width of the gallery being something less than one-half the width of the bay (in the present case say 25 feet). This allows us to group under the gallery the lighter machines, i. e., those working on material light enough to be put in and taken out of the machines by hand, driving same from countershafts attached to the gallery. It also provides floor space in the gallery for the air brake and brass department, the tool manufacturing department, the tin manufacturing department, and the department for repairs to electrical equipment.

That portion of this bay not covered by the gallery should be served by traveling crane. On the ground floor of this bay, in addition to machinery, will be located the vise, pipe, and sheet iron and copper departments. In the heavy machine bay will be found sufficient floor space for the repairs of engine trucks, thus relieving the erecting bay to this extent.

The character of the work to be done in the boiler shop building lends itself very nicely to the same general design as the erecting and machine shop.

The center bay will be devoted to the repairs of boilers, tender frames and cisterns. In one of the side bays will be located the strictly boiler working machinery, flanging fires, laying off tables, etc., while in the other bay will be located the tender truck, boiler tube and ash pan departments. A gallery in this building is not necessary.

In the smith shop building will be located the spring and bolt departments.

The wood and paint shop building can be of the conventional paint shop design, a certain number of bays being assigned to the wood department and entirely shut off from the paint department by means of a fire wall.

The after-trial shop should be rectangular in shape and should have three tracks running through same, each track long enough to accommodate two engines with their tenders. This building should be equipped with wheel pits and an overhead traveling crane.

The power house should be divided longitudinally, thus allowing of the best arrangement of boiler and engine rooms. This building should have a fairly deep basement under the engine room for convenience in running wires, piping, etc., also for locating auxiliaries. Under the boiler room should be a basement or tunnel for coal and ash handling machinery. It is preferable to have a basement under the entire building.

The storehouse should consist of two stories and basement, should have, at least, one fire-proof vault for the storage of combustible material, one or more freight elevators, and by all means should be divided into at least two parts by a fire wall. If the master mechanic's (or shop superintendent's) offices are located in this building, they should be on the second floor. It is preferable, however, to have the executive offices in a separate building.

The paint, oil and waste storehouse should, of course, be of fire-proof construction, and should be one story and basement. The size and general arrangement of this building will depend upon whether or not it is intended to supply only the immediate shop requirements or to make it a general supply point. In this paper we will assume the former.

In order to complete the layout of a plant such as we have been discussing, we will make the following assumptions:

First: Number of locomotives to be maintained, 750.

Second: Average weight of locomotives, 80 tons.

Third: Character of territory served, generally level.

Fourth: Character of traffic, mixed—high speed passenger, local passenger, fast freight and slow freight.

Under the above conditions approximately 120 per cent of the locomotives would pass through the shop for repairs each year, these repairs varying from new firebox and general repairs to machinery, to repairs such as renewal of broken parts, repairs due to wreck, or heavy running repairs which are not usually attempted at the ordinary engine house. With an equipment of 750 locomotives the shops will have to turn out 900 per year, or an average of 75 per month. A shop of this character should be able to turn out on an average three locomotives per track space per month, assuming that the shops are working under the piece-work system or under some individual effort system. Therefore in the erecting shop we will require 25 engine pit spaces. In addition, sufficient space should be provided to allow of making necessary repairs to frames, etc., while the boilers are in the boiler shop having fireboxes renewed.

If we make the erecting shop building 500 feet long, and utilize the center track, with the exception of an engine space on either end, for repairs, and make the sidetracks 360 feet long, utilizing all the space of same for repairs, with the exception of one engine space at the entrance end, we will have ample room to accommodate 25 locomotives under repairs at one time, and also provide a space of approximately 9,800 square feet for repairs to frames. In addition to this should be provided, at least, 6,000 square feet in the heavy machine shop bay for repairs to engine trucks. This gives us a total of 51,000 square feet of floor area for the erecting work.

The floor area required by the other departments is approximately as follows:

Erecting and machine shop building:		
Erecting department (as above)	51,000	sq. ft.
Heavy machine department	24,000	"
Light machine department	14,900	"
Vise department	9,100	"
Sheet iron and copper department	3,500	"
Pipe department	2,500	"
Tool manufacturing department (in gallery)	3.000	"
Tin manufacturing department (in gallery)	4,000	"
Air brake and brass department (in gallery)	4,000	"
Electrical repair department (in gallery)	1,500	"
Total	117,500	"
Boiler and tender shop building:		
Boiler department	9,900	sq. ft.
Boiler machinery department	13,200	"
Tube and ash pan department	8,400	"
Tender department	9,900	"
Tender truck department	4,800	"
Total	46,200	"
Smith shop building:		
Smith department	18,000	sq. ft.
Spring department	3,600	"
Bolt department	3,600	"
Total	25,200	"
Paint and wood shop building:		
Paint department	10,800	sq. ft.
Wood department	10,800	"
Total	21,600	"
After-trial shop	12,600	sq. ft.
Power house	30,400	"
Storehouse	28,800	"
Paint and oil storehouse	8,000	"
Office building	8,000	"

To provide space as above, the general dimensions of these buildings will be as follows:

Erecting and machine shop, 210 feet x 500 feet (with 25 ft. gallery).

Boiler and tender shop, 210 feet x 220 feet.

Smith shop, 90 feet x 280 feet.

Paint and wood shop, 120 feet x 180 feet.

After-trial shop, 60 feet x 190 feet (with offset 15 ft. x 115 ft.).

Power house, 95 feet x 160 feet (one story and basement).

Storehouse, 60 feet x 160 feet (two stories and basement).

Paint and oil storehouse, 50 feet x 80 feet (one story and basement).

Office building, 50 feet x 80 feet (one story and basement).

PRESENT STATUS OF MECHANICAL REFRIGERATION IN RAILWAY WORK.

By Chas. A. Haeussler.

Mechanical refrigeration in the production of ice and cold storage is no longer a novelty in the industrial world today. Being a somewhat recent application, however, its development has steadily progressed, with considerable changes from time to time, so that there has been no opportunity for general standardization of plants as yet, and in some fields the development of this particular branch has scarcely commenced. This is particularly so in the railway world. Mechanical refrigeration has proved its efficiency and ability in cold storage plants, department stores, hotels, and in the large ocean steamers, both for freight and passenger service. However, in the railway world natural ice still holds its original position in the great majority of cases, in spite of the fact that in other departments it is hopelessly outclassed. The reason for this is not entirely clear. It is probably due to the fact that cold storage has been considered of minor importance in railway transportation up to the present time, but this department of the business of a railway is steadily becoming more and more important with enormous opportunities for profitable development in this field.

Now, in order to understand the position of mechanical refrigeration in regard to natural ice. Both exist today on the market, in apparent competition. There exists, however, no recent competition in the strictest science of the word. Artificial ice can be produced much cheaper than natural ice under almost any conditions. When the fact is considered that natural ice merely involves first cost on plant, cost of harvesting, storage, and conveyance to the market, together with loss due to melting, this is no small achievement. Artificial ice can be produced in large plants readily at a cost of about fifty cents a ton, if the plant is of ordinary efficiency. In isolated cases this cost can be lowered as far as a minimum of forty-three cents a ton, and this represents about the lowest limit. Thus, natural ice except in a few isolated cases, where cost of plant and equipment becomes practically negligible, and where the freight rate to the market can be neglected, is no competitor. The reason for the existence of natural ice in the market today, under any circumstances, is merely due to the fact that sufficient artificial ice to satisfy the demand is never produced. Practically, artificial ice men have a ready market for their output at prices fixed to allow natural ice a reasonable profit. As an illustration of the remarkable progress of artificial ice today and the inadequacy of the supply, it can be stated that over 4,000 new refrigerating plants were installed in the United States alone last year.

Now, the situation in the railway world is essentially as follows: Natural ice is the chief source of cold storage here and the competition with artificial ice in this department has not been so great as in other lines, owing to the fact that freight charges are generally negligible. Thus, ice is generally cut and stored at points along the railway wherever obtainable, and at the same time in locations suitable for utilization. When it is necessary to convey this ice to other points the freight rate is not considered in the great majority of cases as a cost factor in its production. Thus, natural ice occupies a stronger position in the railway world in regard to its competitor, than in any other of its utilizations. That this is a wrong condition for the railways to neglect freight rates on their own ice in a consideration of the cost of production is a foregone conclusion.

Another reason of considerable importance, tending to explain the backward question of the railroads in regard to mechanical refrigeration, is due to the fact that the applications of mechanical refrigeration for cooling purposes in railway work are varied often almost as much as the different kinds of perishable freight. Further, mechanical refrigeration has been in a constantly changing development, and the manufacturers of refrigerating machines have readily found a wide open market without entering this field This field is a difficult one to satisfy, since perishable freight requires different kinds of refrigeration for its transportation. Thus, most fruit cargoes require a temperature of about sixty degrees F., maintained throughout transit, for their best conveyance. Milk and dairy products suffer least when conveyed at a temperature of about fifty degrees F. Meats and many additional provisions carry best below the freezing point, whereas eggs and other commodities, utilize thirty-five

to forty degrees and are spoiled with much variation from this temperature.

Again, the nature of the business itself, namely, transportation, renders the application of mechanical refrigeration to cold storage when in transit a necessarily difficult matter. Thus, mechanical refrigeration loses a number of its advantages of direct application for a definite purpose, and generally wherever applied, it has been as an intermediary in the process. The mechanical refrigeration has almost invariably been used to produce artificial ice, and this ice in turn used to produce the refrigeration, and hence it loses much of its economy due to direct utilization. Hence, when all these conditions are considered, it is not surprising that mechanical refrigeration has found easier lines of development, and has not troubled the railways to any great extent.

Today, however, mechanical refrigeration is applied in a number of developments of railway work. The United Fruit Companies have a number of cooling plants in operation throughout the country for the refrigeration of their product in transit. A large number of railroads have cold storage houses operated by mechanical refrigeration in the large cities, for the storage of the perishable products immediately after transit. These houses, of course, in some cases, also utilize refrigeration in ice production, which sometimes finds its way into the cars in transit, but this is of comparatively minor significance in regard to the entire output. The Railway and Stationary Refrigeration Company utilizes mechanical refrigeration in car units for the conveyance of milk in the vicinity of New York, as has been said. This requires a temperature of about fifty degrees and this has been fairly efficient in this application. The general development of single refrigerating car units has not progressed, however, to such an extent as at one time seemed inevitable. This is due almost entirely to mechanical difficulties. A refrigerating machine requires power and cold water for its operation, and considerable care in its maintenance. These three factors tend largely to eliminate the use of the unit car refrigerating plant.

Ammonia is generally recognized as the best substance for the conveyance of heat in refrigeration and occupies a place analogous to water in the production of power in the steam boiler. However, the difficulties encountered in the use of ammonia due to the necessarily high pressure, and the large quantity of cold water required for condensation has resulted in the adaptation of other less efficient fluids for the operation of these machines in this field. Thus, in the example mentioned, methyl chloride is used as a refrigerating agent with a considerable saving in the design of the machine and the difficulty of maintenance, but with a remarkable diminution in efficiency in comparison to the ammonia type. The fact that this substance can be used in this application with any degree of success whatever, speaks volumes for the availability of refrigeration in this field.

Among the other points which apply throughout the development in the application of mechanical refrigeration in this field is the fact that a large number of different types of refrigerating machines and systems are used. There are in existence today refrigerating machines using three different principles in their operation. The air machine, which uses air either at atmospheric pressure or under pressure and cools the same by causing the compressed air to do work, thus changing the heat in the air into work, which is taken out, leaving the air cooled. Air as low as 140 degrees F. below zero has been obtained readily by this method. This machine is often convenient on shipboard, where the use of ammonia or other refrigerating substances may prove undesirable, but it is clumsy and inefficient in operation and its first cost is from two to three times that of an ammonia machine. In addition, it never exists in large units and all statements which have ever been made in regard to increased efficiency or large plants over small ones in any field whatsoever, almost without exception apply equally in this field.

The liquefiable gas machine utilizes the latent heat of vaporization of various liquids for the production of cold. Thus, in order to make water boil, heat must be applied. If the water can be made to boil without this application the heat is taken from the water itself with a consequent cooling effect on the water. The boiling point of water is too high to use in this application, hence a class of substances known as volatile liquids are used. Ammonia, sulphurous acid, methyl chloride, benzine, and a large number of other substances have been used. Even gasoline has been developed as a refrigerating agent in this field. The material produces the refrigeration automatically by boiling away, if its boiling point is below the temperature of surrounding bodies. The sole end of the machinery in mechanical refrigeration, as developed in this type, is for the purpose of saving and reutilizing the refrigerating material. As has been said, ammonia is by long odds the most efficient agent for this purpose. It operates, however, at about a pressure of 180 pounds for the regenerating device, and this has been a serious objection to its utilization and development in the unit car system. The regeneration of ammonia is accomplished in two ways, by means of a compressor, which compresses the exhaust gas until it attains a condensing temperature and pressure above that of the atmosphere, whereupon it is spontaneously condensed. The absorption machine, on the other hand, utilizes the absorption power of water for ammonia gas and the loss of this power with rise in temperature to produce the same effect. Regeneration is accomplished by the application of heat to the mixture with the evolution of the gas at a temperature and pressure sufficient to permit condensation.

Now these two types, the ammonia compression, and absorption machines, are the only really efficient types on the market. The compression machine is much simpler in theory and operation, but has considerable less efficiency in the actual process of production than the absorption type. This latter has comparatively few moving parts, is almost automatic and is generally installed in large units.

In the application of mechanical refrigeration in railway work, not only must all of these types be considered with their relative efficiencies and various advantages for different purposes, but a host of other conditions arise since the mere installation of a refrigeration plant at certain localities along a railway is not the accomplishment of transportation of perishable freight. As has been said, the cheapest and best method of applying this mechanical refrigeration has been through the heretofore production of ice as an intermediary. Further, the efficiency of the various types of refrigerating machines depend almost absolutely upon the duty they are to perform. Thus, the compression machine is superior for mild refrigeration, whereas the absorption is infinitely superior for sharp or extreme refrigeration.

In the production of ice, the absorption type is superior, dependent only upon the size of the plant. For large plants its relative efficiency increases almost in direct proportion to the size of the plant. The use of ice as an intermediary involves a selection from several different methods. All these factors must be considered in the installation of mechanical refrigeration in railway work. Further, its situation with respect to available coal and water supply is a matter of much importance, and many of the large refrigerating plants in large cities have their scale of profit dependent almost absolutely upon this supply and the temperature of the water. Large quantities of cold water are required in the operation of a refrigerating plant of any type, and it can be said in a general way, the more water and the colder it is, the greater

will be the efficiency and the profit resulting in mechanical refrigeration.

Individual unit refrigerating cars probably will never attain any great amount of success. A refrigerating machine is a complicated mechanical mechanism and requires care and attention, and practically all automatic machines at present on the market have proven failures at the present stage of development. With the large existing variations in mechanical refrigeration design, and its various applications in transportation, the use of ice or possibly cold brine as an intermediary in the application of the refrigeration is extremely probable. The chief development in railway work of this department will be in the construction of larger and larger refrigerating units, with special care paid to the distribution of these units, not only in respect to freight transportation, but also cost of production of refrigeration, from a coal and water consumption viewpoint, but also from a cost of handling the refrigerating material and making it available in transportation. Many improvements are possible in this line, and it is unfortunate that the great majority of railways do not consider the mechanical end at all in the installation of such plants. They appear to be interested merely in the transportation end of the business, and the two are so irrevocably connected in this particular field that it is not surprising that the results obtained in the present actual development have not been as satisfactory as could be desired.

Personals

C. W. Bradley has been appointed inspector of transportation of the Chesapeake & Ohio, with headquarters at Richmond, Va.

C. T. Hessmer, master mechanic of the Minnesota division of the Northern Pacific at Staples, Minn., has been appointed master mechanic of the Seattle division, with office at Seattle, Wash., succeeding W. B. Norton, assigned to other duties. W. C. Radke succeeds Mr. Hessmer.

J. H. Nelson, manager and purchasing agent of the Jacksonville Terminal Company, has been appointed general superintendent of the Florida East Coast, with office at St. Augustine, Fla.

T. J. Raycroft, master mechanic of the Sterling division of the Chicago, Burlington & Quincy at Sterling, Colo., has been appointed master mechanic of the Alliance division with office at Alliance, Neb., succeeding F. C. Stuby, assigned to other duties. H. M. Barr succeeds Mr. Raycroft.

C. C. Walker, general superintendent of transportation of the Chesapeake & Ohio, at Richmond, Va., has been appointed assistant general manager. E. P. Goodwin, general superintendent, at Huntington, W. Va., succeeds Mr. Walker, and J. R. Cray, superintendent, at Hinton, has been appointed general superintendent of the West Virginia general division. J. W. Heron, in addition to his duties as chairman of the car allotment commission, will have general supervision of coal and coke car distribution, reporting to the general superintendents.

F. P. Gutelius, general superintendent of the Lake Superior division of the Canadian Pacific, at North Bay, Ont., has been appointed general superintendent of the Eastern division, with office at Montreal, Que.; J. G. Taylor, superintendent of the Alberta division, at Medicine Hat, Alta., succeeds Mr. Gutelius, with office at North Bay.

N. S. Brooks, general foreman of the Baltimore & Ohio at Keyser, W. Va., has been appointed an assistant master mechanic, with office at Cumberland, Md.

J. C. Hines succeeds N. S. Brooks as general foreman of the Baltimore & Ohio, with office at Keyser, W. Va.

J. Wellers succeeds T. O'Brien as general shop foreman of the Columbia & Puget Sound, with office at Seattle, Wash.

A. A. Beavers succeeds G. W. Stubbs as master mechanic of the Gulf Line, with office at Ashburn, Ga.

E. O. Rollings, assistant master mechanic of the Louisville & Nashville at Howell, Ind., has been promoted to master mechanic, with office at South Louisville, Ky.

J. B. Huff succeeds E. O. Rollings as assistant master mechanic at Howell, Ind.

Chas. Manley has been appointed superintendent of shops of the National Railways of Mexico, with office at Aguas Calientes. He succeeds J. E. Hickey.

F. P. Gutelius.

E. O. Rollings.

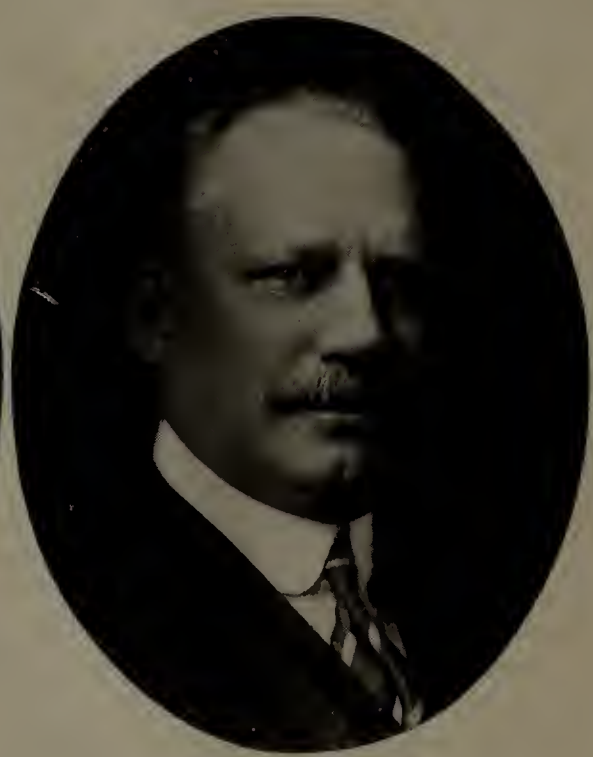

T. H. Garland.

Frank Bradshaw has been appointed master mechanic of the National Railways of Mexico, with office at Mexico City, vice Chas. Manley, promoted.

H. Jackson has been appointed master mechanic of the National Railways of Mexico, with office at Monclova.

H. Stein has been appointed master mechanic of the National Railways of Mexico at Chihuahua.

Willard Doud, shop engineer of the Chicago, Burlington & Quincy, has resigned, effective February 1, 1911.

C. A. Wood succeeds C. W. Tessier as general foreman car department of the National Railways of Mexico, with office at Aguas Calientes.

E. L. Richardson has been appointed general foreman of the Norfolk & Western, with office at W. Roanoke, Va., vice G. W. Keller.

T. H. Garland.

On December 31, T. H. Garland, general agent, refrigerator service, of the Chicago, Burlington & Quincy, resigned to give his attention to the various devices developed and patented by him which are now in general use on railroads. For the past eleven years Mr. Garland has been in charge of the perishable freight traffic on the Burlington, having been appointed to the position in February, 1900. The rapidly increasing tonnage in this class of traffic prompted the Burlington to establish a special department to devise ways and means for the proper care of freight of a perishable nature from the time of loading at originating points until it was delivered to consignees, or to connecting lines. Mr. Garland's policy has been to constantly improve the service, considering this the most potent factor in the solicitation of freight traffic. While engaged in the work of developing this branch of freight traffic, Mr. Garland saw the necessity of having a better refrigerator car with which to handle perishable freight. He first turned his attention to providing a better means of ventilating refrigerator cars in order to carry off the heat and gases generated by fruits and vegetables. After giving the subject careful study he developed a car ventilator which is not only in use on refrigerator cars, but has become standard on passenger equipment on many of the larger railroads, the Pullman Company having over 5,000 of their cars now equipped with the device. Having made a thorough study of the conditions surrounding the transportation of perishable commodities, he is now devoting his time to the further development of the refrigerator cars as vice president of Burton W. Mudge & Co., Chicago. Trial cars are in service equipped with new devices for ventilating, refrigerating and steam heating.

D. J. McOsker,

Geo. P. Sweeley.

OBITUARY.

D. J. McOsker.

Daniel Joseph McOsker, mechanical expert for McCord & Co., Chicago, died Dec. 22, 1910. Mr. McOsker was born in Carleton, Mich., Sept 11, 1866. He was educated in the country schools at Monroe, Mich., and at the age of 14 years moved from Carleton to Jackson, Mich., where he entered the service of the Michigan Central R. R. as a machinist apprentice, being transferred later to the car department at the same place. At the age of 21 years he moved to Chicago and accepted a position in the passenger coach yard of the Atchison, Topeka & Santa Fe Ry. He was later appointed foreman of the passenger yard, which duties he faithfully performed until he was called to enter the service of McCord & Co., April 15, 1905, as a mechanical expert. This position he held until his death. He was an active member in the Chief Interchange Car Inspectors' and Car Foremen's Association of America, in which he counted his friends by the score. He left a widow and three sons, James D., 17 years old; Fred A. 8 years old; and Frank R. 9 months old. Mr. McOsker's death removed from our midst a friend and coworker with whom it was always a pleasure to be associated. His duties were always thoroughly and faithfully performed, so that his taking away was a distinct and irretrievable loss not only to his family, but also to his association.

G. P. Sweeley.

George Parsons Sweeley, late master mechanic Alleghany shops, Pennsylvania Lines, Northwest system, who died at his home in Alleghany, on January 10, 1911, was very well known in mechanical circles, having been in continuous service with the Pennsylvania for more than 35 years. Mr. Sweeley was born in Montoursville, Pa., on July 13, 1856, and after being educated in the common schools, entered Renovo shops as an apprentice in 1875. He was made machine shop foreman soon after completing his apprenticeship, and thereafter was appointed successively, general foreman Indianapolis shops, 1883 to 1888; general foreman Columbus shops, 1888 to 1893; master mechanic Crestline shops, 1893 to 1896; master mechanic Wellsville shops, 1896 to 1900; master mechanic Alleghany shops from 1900 until his death. He was a member of the M. M. and M. C. B. associations, the Pittsburg Railway Club, the Bellevue Club and the Masonic fraternity. He is survived by a widow, one daughter and twin sons, also by a brother E. H. Sweeley, general foreman, Long Island R. R.

PUMP TROUBLES.

A steam pump, to all appearance, is a comparatively simple piece of mechanism, but it can become as balky as a gas engine at times, and it is often nearly as hard to find the trouble with it. One of the commonest troubles is to have

the pump refuse to lift water at all, and this may be caused by a number of conditions. The lift required may be greater than the possible theoretical lift, which is 30 ft., although it is a very good pump which will lift water over 25 ft. The suction pipe may be clogged with waste and other matter, or it may be placed so that it just clears the bottom of the pit, thus preventing the intake of water. Or the pump may be taking air in any one of a number of places, thus destroying the vacuum which is the basis of its action. This is very often caused by the lack of care in selecting pipe with good threads, and in screwing up the same as tightly as possible; or it may be that the gaskets on the water head and suction flanges are not drawn up tightly. Sometimes, too, the operator starts up the pump with the drain cocks in the water cylinder open and wonders why "she doesn't pick up."

With a duplex pump, the gasket on the water end will sometimes be found to have broken out between the cylinders and the pump will discharge but little water, as it simply churns it from one cylinder to the other. This will sometimes cause the pump to "limp," although it is also caused by the valves of one side being stuck, or by the gasket between the two steam cylinders being blown out.

The packing of the piston rods is sometimes turned down so tightly that the pump stroke is shortened a number of inches, resulting in a decrease of efficiency and a loss of power. This packing should be cut to the proper length, the joints staggered and the gland drawn up evenly on either side. Lack of care in this matter will cause undue friction and will also cause the piston rods to become worn with a shoulder, aside from the shortening of the stroke. The writer has sometimes found that a pump short-stroked because the steam piston near the end of its stroke covered up the exhaust port too soon, and thus formed an excessive steam cushion which necessarily retarded its motion. This, of course, was the fault of the manufacturer in that the cores for the ports were not properly placed. It was found that the stroke on such a pump might be brought to the required length by drilling one or more small holes in the bridge from the exhaust port to the live steam port. This allowed the cushion of steam to be relieved at the end of the stroke by way of the live steam port.

Among The Manufacturers

HOT SAW AND BURRING MACHINE FOR FORGE SHOP.

What appears to be one of the most interesting and useful machines recently placed on the market for the forge shop equipment is a hot saw and burring machine manufactured by the Ajax Mfg. Co., Cleveland, O. This machine has been designed and is intended primarily for service in connection with an upsetting forging machine, manufactured by the same company, and the designing and marketing of this machine has been prompted by the desire of the manufacturer to further economize in the production of machine made forgings.

By the use of a hot saw and burring machine the headed forging may be sawed off the bar immediately after it is upset, thus leaving a clean, square end, and likewise the burrs or fins which are formed after a set of dies have been used, can be removed very readily.

The machine is as shown by illustration herewith, and is similar in general design to a double ended grinding or emery wheel stand. On one end of the shaft is a head fitted with a milled band and a milled disc face. This end is used for removing the fins or burrs from the upset forging. The opposite end of the shaft carries a hot saw for cutting off the forging from the bar.

These machines are built in three sizes, with 14, 20 and 30 ins. diameter of saws and burring heads. They operate at a high rate of speed and are consequently built rigidly with large bearings and ample provision for lubrication. The utility of such a machine will be fully appreciated by users of upsetting forging machinery. These machines, with illustrations of some of the sawed and burred products, are shown in the new catalog of the Ajax Mfg. Co.

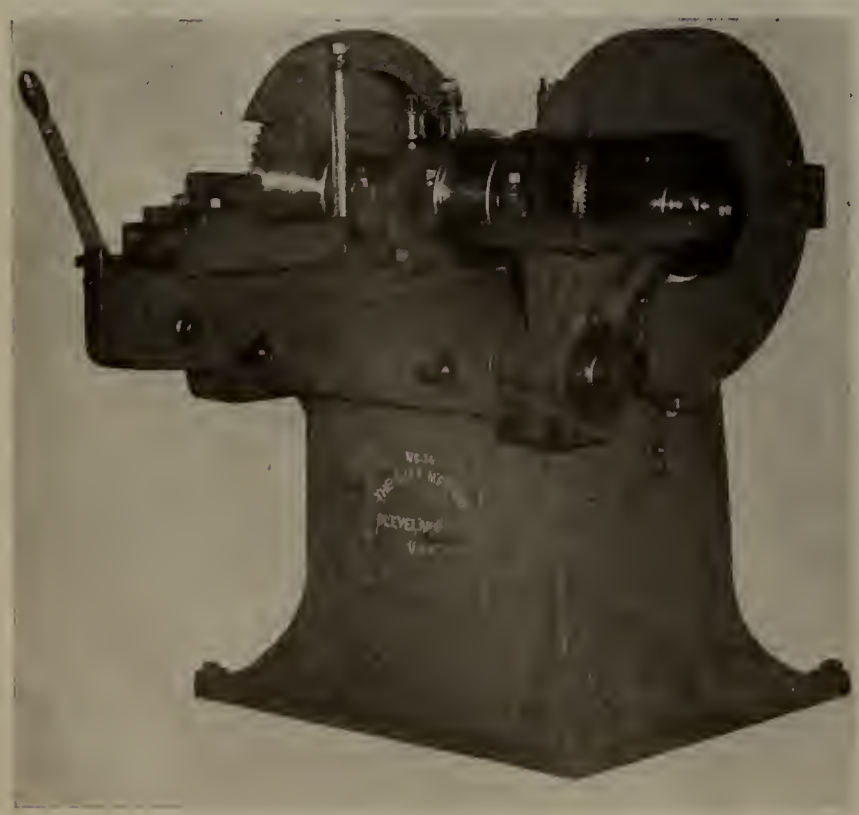

Ajax Hot Saw and Burring Machine.

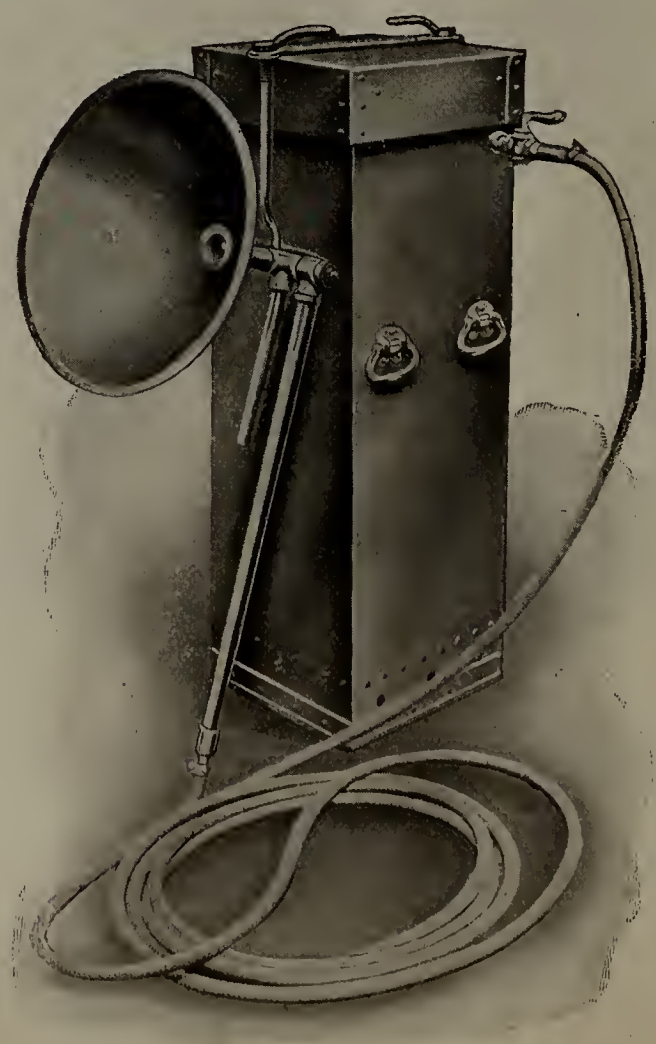

Milburn Light.

THE MILBURN LIGHT.

The accompanying illustrations show an acetylene light manufactured by the Alexander Milburn Co. of Baltimore. This light is designed for railway wrecking or outdoor construction which is usually carried on under difficulties at night time.

One of the illustrations shows a portable lighting outfit which may be very conveniently carried from place to place

Milburn Light in Use on Wrecking Outfit.

without danger from the effects of vibration, wind or weather. It is storm proof and smokeless.

The other illustration shows the application of the apparatus to a wrecking outfit as used on the New York Central Lines. The light may be reflected in any direction for a considerable distance. The cost of operation is surprisingly low—it amounts to about 6 cents per hour for 5,000 candle-power. This is less than half the cost of the old style oil lamp.

It is stated that the Milburn light operates without attention after it has been filled and lighted.

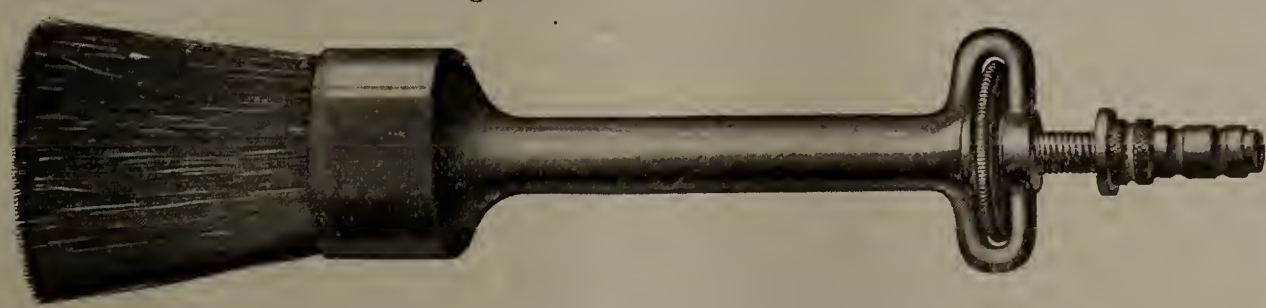

Standard Automatic Paint Brush.

AN AUTOMATIC PAINT BRUSH.

A paint brush which does away with the necessity for dipping, but which has not the disadvantages of the spray type is manufactured by the Standard Automatic Mfg. Co., 50 Church St., New York.

The outfit consists of a large paint tank, either stationary or portable, an automatic valve, a line of flexible tubing and the automatic adjustable brush made of aluminum. The outfit may be carried on the back of the operator. The device is especially adaptable to car or other vehicle work, and is used with economy in structural painting.

An amendment to the postoffice appropriation bill has been agreed to which provides that after Jan. 1, 1916, only steel cars shall be used in the carriage of the United States mails. Inasmuch as the entire number of mail cars now in use aggregates 1,100, this means that about 200 of the steel cars must each year be added to the postal service department between now and the date mentioned.

New Literature

The latest catalogue of S. F. Bowser & Co., of Ft. Wayne, Ind., is a model; the type is clear and readable, the reading matter clean cut and to the point, and the whole is very well illustrated with halftones and sketches. All of the various Bowser oil pumps, registering measures and oil systems are described together with a number of installations on various railroads.

* * *

Record No. 68 of the Baldwin Locomotive Works, Philadelphia, is exceptionally interesting, as it is devoted to Mallet articulated locomotives. Illustrations and descriptions are given of a dozen different types built for as many roads.

* * *

The Muncie Gear Works, of Muncie, Ind., has issued catalogue No. 5, covering a complete line of motor truck and delivery wagon parts, transmission jack shafts and accessories.

* * *

The Ingersoll-Rand Co., of New York, has issued a pamphlet on "Sergeant" rock drills which is of the usual standard form for binding. A number of illustrations are given showing these drills in use on heavy work and also detailed description of the drill. The same firm has also issued a pamphlet on class "PB" air compressor, which is a duplex power driven compressor for belt or rope drive.

The Garvin Machine Co., of New York, has issued two leaflets dealing with the No. 3 duplex milling machine and the vertical milling machine.

* * *

The Gisholt Machine Co., of Madison, Wis., has issued a leaflet on turret lathes for special work.

* * *

The Adreon Mfg. Co., of St. Louis, Mo., has issued a number of leaflets dealing with "Security" back-up valves, "Acme" pipe clamp, Campbell's graphite lubricating system and "American" gravity couplings. These are a few of the many products of this firm.

* * *

The Newport Rolling Mill Co. of Newport, Ky., has published a booklet dealing with metal culverts and other similar products made from its genuine open hearth iron.

Industrial Notes

The Buckeye Steel Castings Co. has just closed a deal for a large tract of land at Indiana Harbor on which it plans to construct a plant to cost $1,500,000. The plant, it is expected, will be completed within two years and will give employment to 2,500 men. The company, however, will open for business in the spring with 1,000 employees.

Thomas L. Mount has been appointed eastern sales agent of the Consolidated Railway Electric Lighting & Equipment Company, New York, with office in New York. L. J. Kennedy has been made western sales agent, with office at Chicago.

The report of the American Brake Shoe & Foundry Co., for the year ended Sept. 30, 1910, has been issued, showing a 21.5 per cent gain in net income and a decrease in interest charges due to the retirement of $26,000 bonds during the year. The surplus after 7 per cent dividends on the $4,000,000 preferred stock was equal to 20.6 per cent on $3,600,000 common stock. This compares with a surplus over 7 per cent on $2,500,000 common in the 1909 fiscal year.

Arrangements have been perfected by directors of the Crucible Steel Company of America for the formation of Pittsburg Crucible Steel Company and for the purchase of 423 acres of the property of the Midland Steel Company on the Ohio river, below Beaver, upon which improvements will be made amounting in the aggregate to $7,500,000. Included in the deal are 1,800 acres of coal lands on the opposite side of the Ohio and 130 acres of limestone near Newcastle.

The plant of the Hicks Locomotive & Car Works at Chicago Heights, Ill., will be sold Feb. 21, at 10 a. m., at the Clark street entrance of the County building, Chicago. The sale, which will be conducted by William McInnes, receiver, is by order of the United States District Court in Bankruptcy Proceedings. The plant comprises parts of five blocks of land, with extensive improvements and is estimated to be worth $500,000 or $600,000. Ringer, Wilhartz & Lauer are attorneys for the receiver.

Joseph T. Ryerson & Sons, Chicago, at the annual meeting of directors, held January 23, elected the following officers: President, Clyde M. Carr; vice-president and treasurer, Joseph T. Ryerson; secretary, Gilbert H. Pearsall; chairman of the board, Edward L. Ryerson.

The Railway Building Co., Manhattan, N. Y., has been incorporated to do railway engineering and construction and to deal in railway supplies. The incorporators are Berkeley C. Austin, Eugene W. Austin both of No. 76 William street, and Walter L. Brunnell, No. 317 West 136th street, New York City.

The Kentwood & Eastern Ry., of Kentwood, La., has ordered a 14 x 20 Mogul type locomotive from the Vulcan Iron Works of Wilkes-Barre, Penna. The Keokuk & Hamilton Water Power Co., of Wiles-Barre, Pa., has also placed an order with this firm for four 15 x 20 in. switching locomotives.

The Chicago Pneumatic Tool Company, Chicago, acquired the gasoline hand car business of the Duntley Manufacuring Company, Chicago, on January 1, and will in future make these cars on a large scale. These motor cars are now in use on 83 railways in this country.

W. G. Tawse has resigned as road foreman of engines for the Chicago & Eastern Illinois Railroad, to accept a position with the Locomotive Superheater Company. His headquarters will be in the Peoples' Gas building, Chicago, Ill.

T. M. Murray, formerly master painter of the Pressed Steel Car Company and for seven years with the Protectus Company, has been appointed railroad representative of the Schoellkopf, Hartford & Hanna Company, Buffalo, N. Y. Mr. Murray will specialize in the sale of "Steelkote" paints for railroad structures. His headquarters are in the New York office, Hudson Terminal building, 50 Church street.

The Sanitary Rag Company of Kalamazoo, Mich., has just completed and is occupying its new factory. The new building is of brick, four stories and basement, of modern construction including sprinkler system and fire protection throughout. It is 175 by 75 feet and has excellent facilities for handling freight. Six cars can be loaded at once from one side of the building. The new plant has a capacity of 20 tons per day of the well known product of this company, soft cotton wiping rags, and is equipped with the latest and most modern machinery for sorting, cleaning and baling, which includes laundry machinery, hydraulic presses and conveyors. The cost of the building and equipment is $80,000. The new plant is required by the growing business of the company, which has built up a large trade among manufacturers and railroads on its soft cotton wiping rags which are used in place of ordinary waste and which it is claimed, offer many advantages in economy and cleanliness.

William Stevenson, for many years with the McGuire-Cummings Manufacturing Co., Chicago, has been appointed special representative of the Indian Refining Co., Cincinnati, Ohio, with headquarters in Chicago

William H. Brown, a consulting engineer and formerly connected with the Westinghouse interests in New York, is dead. He was 61 years old.

W. P. Pressinger has sold his interest in the Keller Manufacturing Company, Philadelphia, Pa., and has resigned his position as vice-president of that company to become manager of the compressor department of the Chicago Pneumatic Tool Company, Chicago, with headquarters in New York.

The Dearborn Drug & Chemical Works, Chicago, who has distributed its fuel water treatment and lubricants through an agency in the Philippines for the past two years, has decided to open its own branch office and warehouse in Manila. F. O. Smolt, who has been connected with mining propositions since his graduation in chemistry from the University of Illinois in 1891, is now with the Dearborn company, and has gone to Manila to take charge of this work under the supervision of E. C. Brown, manager of the foreign department. Mr. Brown has been investigating steam plant and railway conditions in Japan, China and the Philippines for two years, and has made selling connections at Tokio, Tientsin, Hongkong and Shanghai.

F. K. Shults, until recently connected with the American Steel Foundries as their representative in New York and Eastern territory, has accepted a similar position with the Bettendorf Axle Company, Bettendorf, Iowa, of which company he has been made a vice-president. Mr. Shults has opened an office in room 2040 Grand Central Terminal building, New York City. The office at 30 Church street, room 1021, will remain in charge of G. N. Caleb, vice-president, who has been with the Bettendorf company for the last eight or ten years.

The Detroit Seamless Steel Tube Company, Detroit, Mich.., announces the opening of a branch office at 1333-4 McCormick building, Chicago, in charge of W. E. Marvel, formerly manager of the St. Louis branch of the Buda Company, Chicago. Mr. Marvel will have the title of western sales manager, and will have charge of all western and southwestern business of the company, and also of the Michigan Malleable Iron Company and the Monarch Steel Castings Company, both of Detroit.

J. H. Burwell, railway sales agent representing the Seeger Refrigerator Company, St. Paul, Minn., has moved his office from 149 Broadway, New York, to the Grand Central Terminal.

Railroad Electrification

ELECTRIFICATION of important terminals and tunnels is a present necessity.

Entire electrical operation of numerous steam lines for general service is certain.

The three great systems have characteristic features of advantage for particular conditions, which a brief review may summarize.

The Direct-Current System was the first in the field and has advantages in operative characteristics of the motor:—simplicity and ruggedness with high power, variable speed and ease of control. Westinghouse Interpole Construction has removed commutation troubles and Westinghouse Field Control has increased the range of flexibility.

The limitations of the system are found in the high cost and low efficiency of the transmitting and distributing system and in conversion losses, especially in moving heavy trains over long distances.

The Single-Phase System gives operative qualities similar to those of Direct-Current, with somewhat greater flexibility as to power and speed. The first cost of the transmitting and distributing installation is low, and great economy for *hauling heavy trains over long distances* is secured. The motors are similar to direct-current motors and may be operated on direct current if necessary, but this requires additional, heavy and complicated control.

The first cost and weight of Single-Phase rolling stock equipment is somewhat higher than that of Direct-Current apparatus.

The limitations of Single-Phase operation have not yet been determined.

The Three-Phase System is adapted for roads where constant speed in uninterrupted hauls is economical. Sufficient variation of speed for starting and stopping is provided for by use of resistors. Overspeeds are impossible. Two or more efficient speeds may be provided. The cost and weight of the motors is comparatively low and regeneration of power is possible with electric braking.

The practically constant speed operation of the Three-Phase motor is against its use on ordinary main-line railways where variable speeds are used. Two overhead trolley wires increase the cost of installation and cause complications.

In choice between the three systems in America, local conditions should be considered; but the *coming general electrification* of important railroad divisions must be held in view.

For more than forty years the Westinghouse name has been identified with the best features of railway development and the *largest and most important Direct-Current, Single-Phase* and *Three-Phase* railway *installations in the world use* Westinghouse apparatus.

Recent Railway Mechanical Patents

Material for this department is compiled expressly for RAILWAY MASTER MECHANIC by Watson & Boyden, Patent and Trademark Attorneys and Solicitors, 918 F Street, N. W., Washington, D. C., and to them all inquiries in regard to patents, trademarks, copyrights, etc., and litigation affecting the same should be addressed.

A complete printed copy of the specification and drawing of any United States patent in print will be sent, postpaid, on application to the above firm, to any address for ten cents.

LOCOMOTIVE.

979,208—Harry Scheib and William A. Austin, assignors to Baldwin Locomotive Works, Philadelphia, Pa. Patented Dec. 20, 1910.

This invention has reference to certain improvements in compound locomotives of the articulated type in which there are two sets of cylinders at the forward end and two or more cylinders at a point intermediate the ends of the locomotive. The object of the invention is to so design the locomotive that it can be used either as a triple expansion locomotive or a compound locomotive in which the intermediately located cylinders are the high pressure cylinders and the forward cylinders the low pressure. The illustration shows a side elevation of the improved locomotive, and for a better understanding of the construction those interested are referred to the complete patent.

980,739.

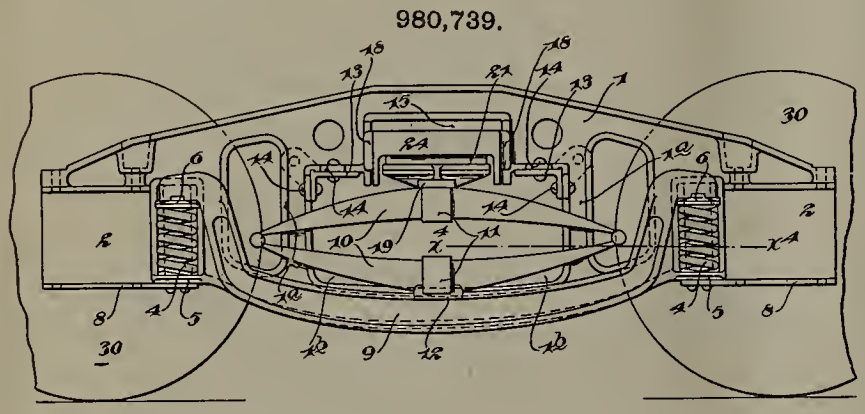

BRAKE-BEAM.

979,624—C. H. Williams, Jr., assignor to Chicago Railway Equipment Co., Chicago. Patented Dec. 27, 1910.

This invention relates to a trussed structure particularly applicable for use as a brake-beam. The novelty consists in forming the tension member 3 with reversely screw threaded ends adapted

979,624.

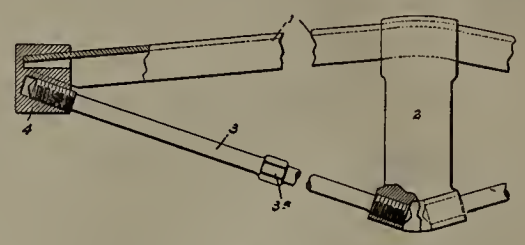

to be received in correspondingly threaded sockets formed in the strut and thrust block respectively. By turning the tension member with a wrench it will tighten up the trussed structure and place a camber in the compression member.

CAR TRUCK.

980,739—John C. Barber, assignor to Standard Car Truck Co., Chicago. Patented Jan. 3, 1911.

This patent relates to improvements in the well-known Barber type of truck manufactured by the Standard Car Truck Company. In this new design the bolster is supported upon an elliptic spring which rests upon the middle of the equalizer bar, the ends of which in turn rest upon helical springs supported upon the side frame near the journal box. The complete drawing comprises seven figures, and those interested should obtain a copy of the patent itself.

979,208.

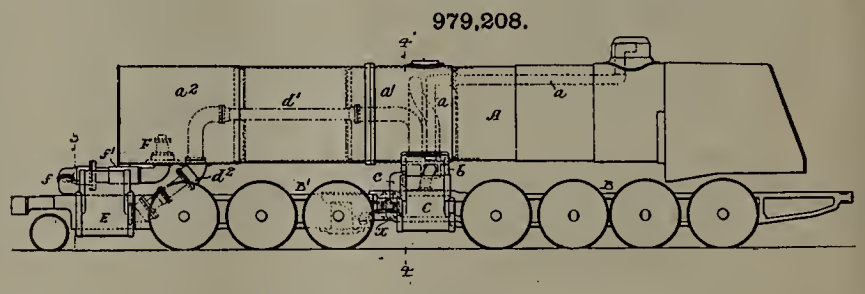

THE FOREMAN'S DREAM.

William J. Miller ('course the name is fictitious)
Is a man who was never at all superstitious;
But a dream which he had is direct intimation
Of his faith in the doctrine of predestination.
Now, the said William Miller, please bear in your mind,
Is a bright roundhouse foreman, who, like all of his kind,
Has trials and troubles too many to state—
And with this introduction his dream I'll relate.
A spirit appeared at his bedside one night,
Decked out in a garment of pure, spotless white,
And thus addressed Bill: "To me had been given
Command from the Recording Angel in Heaven
To ascertain why 'tis your name should appear
On the Great Book of Life, as the reason's not clear,
The profanity record has been kept for ages,
But nothing like yours appears on its pages;
Therefore, 'tis decided unless you can show
Just cause for defense, to send you below,
Where the fire is unquenched, and those who have never
Repented are roasted forever and ever."
On hearing the latter, Bill tried hard to smile,
And invited the spirit to tarry awhile.
"If I fail to make my defense in full measure,"
He said, "I'll be sentenced with greatest of pleasure.
Please remain here to-morrow, accompany me,
And report to headquarters whatever you see."
The spirit agreed, I am happy to say,
And took notes of what happened the following day.
First, a conceited young clerk, with expression Satanic,
Brought a bundle of letters from the master mechanic,
And here a few extracts I'll give as example
Of the bunch that the spirit took away for a sample;
"Please note that the superintendent complains
You are using poor coal for our passenger trains."
"Please let me know what excuse you can make
Why so many new compound packing rings break."
"Engine failures, last year, for the month were but seven;
I regret for the same time this year there's eleven."
"You must take up the matter and ascertain why
We used too much oil in the month of July.
You are surely aware that a half pint to use
Of valve oil per hundred is simply abuse;
I believe t'would be wise (at least we can try it)
To give engineers feathers with which to apply it."
"The President's special is leaving to-day
At ten forty-five; there must be no delay."
But, alas! for the plans of mice and men!
The telephone rang at exactly ten ten,
And old Phil, the caller, announced with a drawl:
"De fireman is sick. Who else will I call?"
A fire-up man appeared just then at the door—
"The crown sheet is down in the 74."
Then next comes an engineer, swelled up like a toad—
You'd think from his looks that he'd surely explode—
And asked loud in the name of the evil one;
"Why hain't the work on my engine been done?"
Bill Miller, he then made an angry retort;
While the spirit examined the work report
Of this same engineer; and this was the news;
"Wash out the biler and boar out the flews,
The seems are a squirtin', cork all the leaks,
Rite back driver box is so dry that it squeeks.
Steampipes are leaking; pack the throttle well.
Right main pin cut and runs hotter than——(it should).
All the rod bushings are loose on both sides.
Set up the wedges and line up the gides,
The air pump jerks on the upward stroak.
Examin' and see if the valve ain't broak.
Take down left mane rod, reduce the brass,
And don't fail to put in a watter glass.
Raze the front end an inch or more,
And fix the ketch on the fire box door.
I think from the way she burns her fire
Her petticoat should be a little hire."
Before the good spirit got through taking notes
From the book containing the work reports,
From the chief dispatcher came a message which read:
"The Golden Gate Special's engine is dead.
Send another at once to take the train.
Why you sent this one on 21, please explain."
Then a hostler announced that a broken switch
Had caused him to put engine 12 in the ditch.
The spirit departed, but on that same night,
Returned with a crown, and in greatest delight
Presented to "Bill's" most astonished vision
A text of the Recording Angel's decision,
And a list of the great hero saints all revealed,
With William J. Miller's name leading the field.

—Exchange.

RAILWAY MASTER MECHANIC

Established 1878

Published by THE RAILWAY LIST COMPANY

WILLIAM E. MAGRAW, Pres. and Treas.
CHAS. S. MYERS, Vice-Pres.
C. C. ZIMMERMAN, Bus. Mgr.
J. M. CROWE, Mgr. Cent. Dist.

LYNDON F. WILSON, Managing Editor
OWEN W. MIDDLETON, Assoc. Editor
KENNETH L. VAN AUKEN, Assoc. Editor
WARREN EDWARDS, 2d V.-P. & Assoc. Editor

Office of Publication: Manhattan Building, Chicago
Telephone, Harrison 4948
Eastern Office: 50 Church Street, New York
Telephone Cortlandt 5765
Central Office: House Bldg., Pittsburg, Pa.

A Monthly Railway Journal

Devoted to the interests of railway power, car equipment, shops, machinery and supplies.
Communications on any topic suitable to our columns are solicited.
Subscription price, $2.00 a year; to foreign countries, $2.50, free of postage. Single copies, 20 cents. Advertising rates given on application to the office, by mail or in person.
In remitting, make all checks payable to the Railway List Company.
Papers should reach subscribers by the 16th of the month at the latest. Kindly notify us at once of any delay or failure to receive any issue and another copy will be very gladly sent.

Entered as Second-Class Matter June 18, 1895, at the Post Office at Chicago, Illinois, Under Act of March 3, 1879.

Vol. XXXV. Chicago, March, 1911 No. 3

CONTENTS.

Editorial—
Shop Extension 81
Conservation of Men 81
Locomotive Boiler Troubles 82
Care of the Injured, Penna. R. R. 82
Shop Improvements at Huntington, C. & O. Ry. 83
Economy in Manufacturing Tools 88
Locomotive Standardization, Chi. Gt. Western R. R. 90
Car Wheels Revolving Independently 91
Articulated Locomotives with Flexible Boilers 95
Father of Efficiency 97
Time Required for Change of Power 97
Railway Electrification at Boston 98
The Man who Knows 104
New Electric Locomotives, Penna. R. R. 105
Nickelized Chilled Car Wheel 106
Locomotive Specifications 108
English Built Railway Motor Car 109
British Locomotive Standardization 110
Care and Maintenance of Machine Tools 112
Gernian Railway Gas-Electric Car 113
Recent Court Decisions 114
New Books 114
Personals 115
Among the Manufacturers 116
Special Vertical Milling Machine 116
Solid Adjustable Die Heads 116
New Literature 117
Industrial Notes 117
Recent Railway Mechanical Patents 120

SHOP EXTENSION.

The Huntington shop improvements of the Chesapeake & Ohio Ry., described on another page of this issue, are strikingly illustrative of the practicability of a comprehensive plan of extension for old and poorly equipped repair shops. The success with which the plan has been carried out is evident after a study of the description, where it is shown that with the construction of only four new buildings and the extension of the remainder, the capacity was more than doubled. The usual difficulty with propositions of this nature is the lack of any allowance for future extension in the original layouts. This was the case at Huntington and in the *modus operandi* lies the interest.

In the extension of the Chicago & Northwestern shops at Chicago, described in the December, 1910, issue of The Railway Master Mechanic, the results were far from satisfying, as the plan adopted after long study resulted in one of the worst mix-ups ever viewed by man. Yet credit, rather than blame, should go to those who assisted in obtaining the best layout possible. As pointed out in the description of the last mentioned shops, the original construction in 1874 allowed in capacity for upwards of four times the output needed at that period. The oversight rested in the fact that no provision was allowed in the yards for the extension of buildings. The result is that two separate erecting and machine departments must be maintained for the same class of work, with a resulting confusion in the handling of the boiler shop output, stores, etc. At Huntington the original designers were just as shortsighted, and by happenstance only it was possible to build in the extensions along the lines of a comprehensive general plan.

The pity is that nearly all of these shops thirty or more years in operation are so well constructed as to leave nothing to be desired in that line and that being the case, it is not practical to consider a scheme of improvement which necessitates tearing down all the old buildings and starting over again. We do not know at this time whether in our new installations we have left ample provision for all ultimately necessary extension. We only think so. Placing reliance on the ratio of the past, the presumption is that thirty years hence the extension of recently built shops will not be the difficult problem it has proved in most of the present day attempts.

CONSERVATION OF MEN.

According to a bulletin of the Bureau of Labor the number of deaths resulting from accidents among adult wage earners is about thirty thousand yearly, which is a rather conservative estimate as undoubtedly a great many of these cases are unreported. Thirty thousand lives a year is a big price to pay for ignorance, carelessness and the lack of safety devices, and our railroad shops are paying their share. It is true that year by year the use of safeguarding devices is being extended, but it is equally true that some of the old danger points are protected while the new ones are allowed to remain unprotected. Among the latter may be mentioned the proper insulation and protection of electrical equipment so as to minimize the possibility of contact with a high voltage.

But it seems that much may still be accomplished in pro-

viding such machines as saws and grinders with safety devices. It is not always easy to create sentiment in favor of such devices; for one reason there is always a general tendency to leave well enough alone, and until a man has a few fingers chopped off in a gear, it is not likely that anyone will think about putting a guard on it; for another reason, the men do not always take kindly to protective devices, for occasionally they interfere with their work and consequently decrease their earning capacity if they are on piece work. In one woodworking shop which is quite well equipped with safety devices the latter are not in use half the time because the men with our characteristic American haste don't want to be bothered with them. Machine tool manufacturers are doing a great deal to protect the danger points of their products and it is up to the shop foreman and superintendent to see and insist that men be protected. Everybody's business is nobody's business, and if he does not keep an eye open for these places no one else will. A large percentage of accidents are due to ignorance and carelessness and these are the most difficult to eliminate; in fact, the best way to reduce them is to make them impossible. Loose clothing draws in quite a number of victims; a young man decided to oil the upper bearings of his four-spindle drill press while it was running. He took his oil can, got up on the machine and reached over the top; the loose sleeve of his jacket caught in the gears and the muscles of his right arm were chewed off. A week later he died of blood poisoning.

Aside from positive danger points there are what might be called negative danger points, not necessarily dangerous in themselves, but dangerous because of the accumulation of rubbish or the absence of light. Light is just as necessary in the dark corners of our shops as it is in the dark corners of our cities—it minimizes danger in either case. It is an actual fact proven by statistics that the greatest number of accidents occur during November, December and January, the months of minimum daylight. And it is not always the question with artificial illumination of the amount of light, but the diffusion of the light. We beieve that good general illumination, with as few drop lights as possible, is the best for the shop, for after looking at his work with a strong drop light, a man is in semi-darkness when he looks away and may easily make a misjudged move. There is a growing field for the illuminating engineer. Slippery floors are another source of danger, but is one which is minimized in the shop which is kept in a clean and orderly condition. Those responsible should insist on cleanliness and carefulness in their shops just as much as they should insist that work be done efficiently.

LOCOMOTIVE BOILER TROUBLES.

For the past few months it would seem that there has been more than the usual amount of agitation with regard to locomotive boilers and their diseases. Nothing of material value, however, has developed in the way of remedies. At least no radical improvements in construction or design have been generally recommended or adopted. It is true that the flexible boiler for Mallets has become an actuality, but this is a mere adaptation of the ordinary boiler to certain requirements having to do with limitation of rigid length. The diseases referred to, and the ones which are costing so much money are located in the sheets of the firebox. It would appear that the money which is being spent in attempted cures should be sufficient, if directed into the proper channels, to show some effect in prevention. The physician must direct his efforts toward prevention of diseases in the human body in the original design of which he had no word. Those concerned in the proper operation of locomotive boilers have the advantage of being able to do their own designing or of encouraging the work of improvement in design as attempted by other members of the same profession. It should not be necessary or important that they spend great effort in the cure of diseases in a boiler, the design and construction of which is, broadly speaking, faulty.

Admittedly little is known of the strains set up in the sheets of a firebox of present day design by the effects of expansion and contraction. No one denies that these strains are not properly taken care of, as that person would also have to deny that side sheets crack. Radical improvement is not to be expected by change in materials; it must come from change in shape or form of the sheets. Something in this line has been done by deep thinkers in the field, but their efforts have not met with proper encouragement on the part of motive power officials. It is to be expected that first costs of new designs will be substantially greater, but it needs only to be shown that these new designs will eliminate the costly troubles incident ot the old contruction, when the increased cost, if within reason, will be more than justified.

CARE OF THE INJURED, PENNSYLVANIA R. R.

That any employe or passenger on the Pennsylvania R. R. may receive immediate attention in case of sickness or accident, the company is extending its methods of giving instruction on first aid to the injured. To this end demonstrations are to be given to employes and a circular card has been prepared for distribution to employes at the lectures delivered by medical examiners of the company. The printed instructions that will be distributed to all employes of the Pennsylvania R. R. are entitled "Hints on First Aid to the Injured." "Keep Cool" is the first admonition. Employes are then advised to send for the nearest physician after which the injured or ill person should be placed on a standard stretcher, a number of which are provided on cars, in stations, shops, and other places. "Keep the Crowd Away" is the next heading on the circular, which also warns employes against touching open wounds with their hands.

The "First Aid" packet is described in the circular. It contains two aseptic compresses in oil paper, one cambric bandage, one triangular bandage and two safety pins. The details of dressing a wound are then gone into. Following the general instructions the circular deals with accidents and ills which are most frequent, giving specific and detailed instructions for first aid. An important part of the first aid work of the Pennsylvania R. R. is in instructing employes in methods for resuscitation from electric shock. The use of electricity on the New York Improvement and the West Jersey & Seashore R. R. has made it necessary to lay stress on this. Since the Pennsylvania R. R. undertook to instruct train, station and shop employes in methods of giving first aid to the injured, practically every such employe on the system has attended lectures by the company's medical examiners. Last year 228 lectures were given to no less than 6,854 employes. This year it is the management's intention to prosecute this work even more vigorously

Shop Improvements at Huntington, C. & O. Ry.

For some time past the requirements of the Huntington shops have reached a point where it was impossible for them to meet the increased amount of work without additional shop space and improved facilities for the handling of the work. The shops and buildings then in use having been constructed 30 years before, were of an old style, well built but arranged without regard to necessity for extension. There were a number of engine rooms placed about the shops and everything was belt driven. A separate engine was installed for each line shaft. Facilities for lifting locomotives were lacking. The several widely separated steam engines were, moreover, served by several distinct boiler plants.

Aftr a careful preliminary study as to the best utilization of the old buildings and the least expense for the improvements, it was decided to construct a central power plant, a stripping shop, additions to the machine, boiler, locomotive and freight car blacksmith shops, and to the brass foundry, together with a new planing mill and a storehouse.

Planing Mill.

The planing mill requirements had entirely outgrown the building in which that machinery was located, and it was decided to erect a new building 268 ft. long x 90 ft. wide. This is a substantial fireproof structure, having brick walls, steel roof trusses and concrete slab roof. There are two floors in the mill. The first floor is a concrete slab, in which there are two railroad tracks running the entire length of the mill, with a transverse track in the middle, in order to facilitate the handling of material. The second floor, which is made of hollow tile and reinforced concrete, rests on steel columns along the center line of the mill. This floor is used for a cabinet and pattern shop and for the repair of cabs, hand cars, etc. The mill is equipped with a full outfit of woodworking machinery arranged in groups, with the exception of two large timber sizes which have individual motors. The machinery throughout is driven by electric motors of the induction type.

After the installation of a few additional machines the output of this mill was increased about 50 per cent over that of the old mill, with approximately the same labor cost.

Instead of being located at right angles to the yard tracks, as was the old planing mill, the new one has been placed parallel to the yard tracks, making it more convenient for the handling of material in and out of the building and to the repair tracks and passenger car shop. The new mill is located approximately midway between the lumber yard and the freight car repair tracks.

Storehouse.

The old storehouse had not been enlarged with the expansion of the shops. It was in a badly congested condition and located on a space needed for other shop purposes. For this reason a new and thoroughly modern storehouse and office building was constructed. This is a brick building 200 ft. x 50 ft., two stories high, except 50 ft. at one end. This end is three stories high and is used for offices. On three sides of the building is a platform 8 ft. wide and at one end the platform is extended to dimensions of 96 ft. long and 66 ft. wide and is used for the storage of castings, heavy forgings, etc. In the storehouse is an electrically operated elevator and both floors are equipped with bins and racks, as required by the various classes of material stored there.

First Floor of Planing Mills, Huntington Shops.

Power Plant.

The equipment of this powerhouse is arranged in a unique manner. The boilers are at approximately ground level, as well as the air compressors, but slightly above the boiler room floor. The turbine floor, however, is up about 6 ft. above the compressor floor. Underneath the turbine floor, which occupies half of the space devoted to engines and turbines, is a basement 6 ft. deep. Since the air compressors were to run non-condensing there was no object in having a basement under them, therefore it entailed less initial cost in having them placed on the ground level. The large

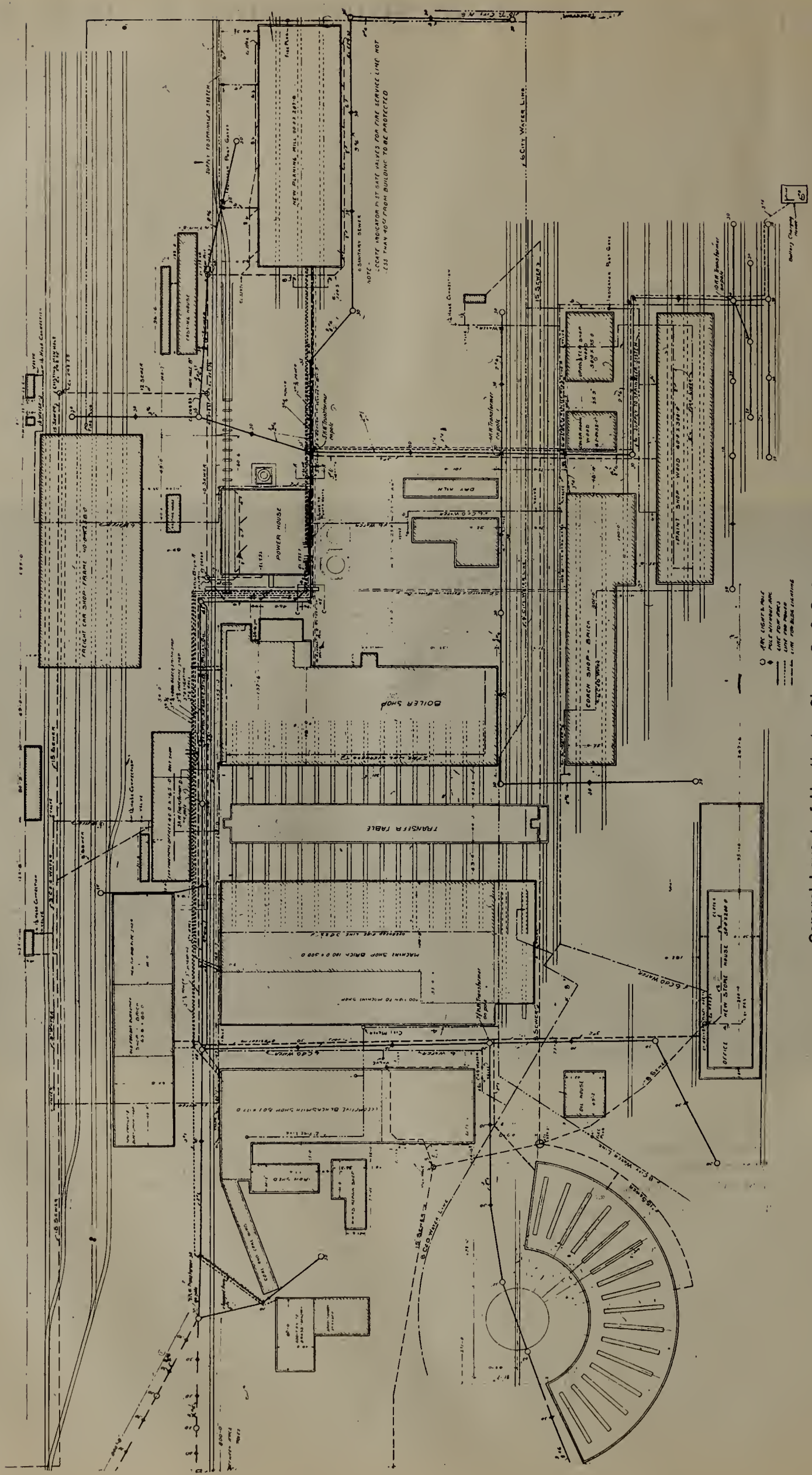

General Layout of Huntington Shops, C. & O. Ry.

Stripping Shop Showing Locomotive Hoist.

turbines were to run condensing and had to have room underneath for condensers. This space was also utilized for the placement of feed pumps, return pumps, exhaust header, etc. The dimensions of this building are 80 x 93 ft. It is fireproof throughout, having brick walls carried on concrete foundations, steel roof trusses and concrete slab roof. There is installed in the engine room a hand power crane, having a capacity of 7½ tons. Alongside of the power house is located a coal bin which is beneath an elevated railroad track with a trestle approach. There is an overhead ash bin, with electric hoist and bucket for elevating ashes. This bin is fitted with a spout for loading ashes into cars by gravity.

The equipment of the power house consists of one 750 k. v. a. General Electric turbine set, operating condensing; one 125 k. v. a. General Electric turbine set, operating non-condensing; the current used is 3-phase, 60 cycle, 440 volts. One turbine and one motor-driven exciter are provided for the alternating current generators. Space for a future 750 k. v. a. turbine is provided. The boiler equipment consists of five 271 h. p. Stirling water tube boilers operating at 150 lbs. pressure. The boilers are designed and equipped to burn slack coal and are operated ordinarily at 50 per cent overload. The chimney is 200 ft. high by 7 ft. 6 ins. diameter and is constructed of hollow tile and reinforced concrete. It is connected to the boilers by a brick smoke flue. The old stack, which was heavily constructed and too small for any possibility of salvage, was pulled down by the use of a locomotive, a rather unusual but very inexpensive method.

One 2,000 and one 1,000 ft. air compressors were removed from one of the dismantled powerhouses and re-erected in the new powerhouse.

Enough water for condenser purposes is not available at Huntington except through the use of a cooling tower. This tower has a vertical steel shell 90 ft. high, 20 ft. diameter. The bottom 30 ft. of the shell contains a grillage of Cypress planking, the entire surface of the grillage amounting to 30,000 sq. ft. The water, after being used to condense steam from the turbine, is pumped up from the condenser and is spread over the grillage by means of a system of perforated pipes. As the water falls in thin films over the surface of the grillage it is cooled by contact with the air and becomes cool enough to be used over again in the condenser. The movement of the air within the tower is accomplished by natural draft. The condenser is of the Westinghouse Le Blanc type, driven by an induction motor directly connected to a shaft on which are mounted both rotary circulating and air pumps. It is an interesting fact to note that on one of the hottest days of last summer, with the thermometer 95 deg. in the shade, a vacuum of 26 in. was maintained with ease all day long.

The economical operation of the new powerhouse equipment resulted in a decrease of 50 per cent in the coal consumption with more than 100 per cent increase in power supplied.

Stripping Shop.

This is a structure 135 ft. long x 45 ft. wide, of which 50 ft. is elevated and contains a locomotive hoist spanning two tracks which run longitudinally through the structure. The locomotive hoist is made up with a primary view to economy and low first cost. It is used for lifting engines off their wheels and setting them down on trucks so that they can be pulled out on the transfer table and moved into the old erecting shop, at one end of which the stripping shop is located. When repairs to the locomotive have been completed in the erecting shop, it is transferred back to the stripping shop, lifted by the locomotive hoist and set down upon the driving and truck wheels.

The stripping shop obviates the jacking up of engines to remove and replace wheels, and its construction was necessitated by the extremely heavy power now in use on the C. & O. Ry. In the section of the stripping shop not served by the hoist are pits so that the engines, after having been put on their wheels by the locomotive hoist, can be completed without retransferring back to the erecting shop. This stripping shop has doubled the output of the erecting shop and materially reduced the cost of locomotive repairs in the shop. The increased output from the shops and the introduction of the stripping shop required quick and reliable operation of the transfer table, and as the old transfer table was operated by a pair of air engines, an electric drive has been substituted. Current for the motor on the table is supplied from three overhead trolley wires. Two mechanical speed changes are provided to prevent overloading the motor when starting, or when moving unusually heavy loads.

Machine Shop Extension.

This extension is 300 ft. long by 60 ft. wide. It has brick walls, skylights in the roof, steel roof trusses and is built along the wall of the old machine shop. The object of this

Power House and Cooling Tower, Huntington Shops.

addition was to give space for the additional machine tools necessary to increase the output of the shops. Owing to the fact that only one longitudinal wall had to be built, the cost of the increased floor space was low.

Boiler Shop.

This shop was formerly in a building one-half of which was devoted to the boiler shop and one-half to the planing mill. By removing the planing mill to a new building opportunity was afforded to use the whole of this building for boiler repairs.

It was necessary to rearrange the old equipment and provide new tools as required for the desired increase in output. Most important in the list of new equipment provided is a sectional flanging press with an extra large flanging and annealing furnace for fire box work. An accumulator and hydraulic pump operating at 1,500 lbs. per sq. in. supply power for this press and have capacity to supply high pressure water for a future hydraulic riveter. A full outfit of stay bolt machinery for the manufacture of stay bolts is installed, together with a horizontal flange punch, bevel shear, flue sheet and mudring drill, extra heavy punching and shearing machines, with 60-in. throats, stake riveter, stay bolt breaker, etc. Running longitudinally down the shop and serving all of the tools is a walking jib crane, electrically operated, having 5 tons capacity and a 25-ft. radius. This crane carries material between the machines and the boilers under repair, which stand on transverse tracks on opposite side of shop to the machines. The new equipment makes this a very efficient boiler shop for all classes of the heaviest work.

The extension to this building, which was originally used as a power plant, has been converted into a flue shop, and a small addition has been built alongside of this extension to house the flue rattlers. The machinery in this flue shop was so arranged as to minimize the labor cost of handling the flues. The results of actual operation show a reduced cost of repairing flues and that this shop is amply able to take care of the increased output of the boiler shop.

Locomotive Blacksmith Shop.

The addition to the blacksmith shop of 100 ft. x 80 ft. afforded an additional area in this building of about 50 per cent, providing ample space to take care of the additional work required with the increased output of locomotives. The shop is now arranged with steam hammers along its center. On one side is a row of double forges while on the other the bolt and forging machinery is located with the necessary furnaces. A 5,000-lb. hammer is installed for heavy work and slabbing, and adjacent to this is a large scrap furnace for working up scrap and extra heavy forgings. In one corner of the shop is an open frame hammer for locomotive frame repairs, together with the necessary frame fires. Ample jib crane service for the hammers, the furnaces and a number of the forges is also provided.

Freight Car Blacksmith Shop.

This addition is a brick structure with wooden roof trusses, 100 x 64 ft., and is located on one end of the old freight car blacksmith shop. On the other end is the new tin and pipe shop of like construction, 100 x 64 ft.

The freight car blacksmith shop was re-arranged and equipment added. Among some of the tools installed were a No. 9 Pullman type bulldozer, an extra large furnace for straightening steel car material, small bulldozers, power hammers, eyebolt machine and rivet machines. The old machines were relocated and blast lines laid in the floor for supplying air to the forges and oil furnaces.

Second Floor of Planing Mill, Huntington Shops.

Brass Foundry.

To provide room for taking care of the desired increase in the brass foundry output an addition of 80 ft. x 40 ft. was erected. This is of wood construction corresponding with that of the old brass foundry. The output of the brass foundry is unusually heavy for a railway shop of this size, as considerable material is shipped to other line points. In order to increase the old output and to take advantage of the possible economies due to the large amounts of material handled, an automatic moulding machine and an oil burning brass furnace were installed, together with such smaller tools as a sprue cutter, a wire cutter, a new tumbling barrel, magnetic separator, and ladle heater.

Yard.

The water supply and compressed air lines between the various buildings were found in general to be satisfactory and with a few changes were permitted to remain in place. Steam lines, however, between the powerhouse and the various buildings had to be installed new in most cases owing

Storehouse, Huntington Shops, C. & O. Ry.

to the fact that under the old arrangement practically every building had its own boiler plant. The heating systems of the various buildings were overhauled, and where possible were converted from the use of live steam to the use of exhaust steam.

A pipe tunnel of concrete construction has been installed and extends from the powerhouse to such positions as permit straight runs of pipe in underground boxes to be made to all of the buildings. This has been installed for the purpose of permitting ready access to the portions of the steam and exhaust pipes most affected by the strains of expansion and contraction.

The coach yard has been equipped with a new system of steam lines for heating passenger coaches and has also been equipped with a storage battery charging outfit for the lighting systems of passenger coaches, which run into Huntington.

General.

In general the extension of these shops has resulted in an increased locomotive output of approximately 100 per cent, with a material decrease of cost per locomotive, and an increase of about 50 per cent in the planing mill output with approximately the same labor cost as before the new planing mill was built. The work of extending these shops was carried on under the direction of J. F. Walsh, general superintendent of motive power; C. H. Terrill, superintendent of motive power; T. M. Ramsdell, master car builder; W. S. Butler, master mechanic, and was designed and executed in its entirety by Westinghouse, Church, Kerr & Co., 10 Bridge street, New York City.

Locomotive Blacksmith Shops, C. & O. Ry.

ECONOMY IN THE MANUFACTURE OF TOOLS*

By W. M. Townsend.
Supv. Tools, Montreal Loco. Co.

Various kinds of milling machines are rapidly making their way prominent in removing surplus stock from machine and locomotive parts, hence the necessity of having durable milling cutters.

To obtain an efficient milling cutter there are two points which are essential, namely, high speed steel and a spiral or helical cutting edge. The latter quality may not appeal to some, due to the fact that an inserted tooth cutter made from a mild steel body with a high speed steel blade inserted at an angle of about 12 degrees, answers fairly well. This, however, is a great mistake. To obtain a clean cut it is necessary to have a certain and constant angle of rake or lip to the milling cutter. This can be obtained only by having a helical or spiral cutting edge.

To construct the milling cutter that will give the best results and still adhere to the principle of strict economy (the point which I wish to emphasize mostly in this paper), we must first of all consider its diameter. We will first speak of cutters having a diameter of over 6 inches. Keeping close to our principle of economy, we apply to the scrap heap for material; there we will find crop ends of billet steel sawed from the ends of driving axles, which make an ideal body for an inserted tooth high speed steel milling cutter. The scrap value of these crop ends is very small, hence the low cost for the body of the cutter. Now, to procure high speed steel for the blades in an economical manner (which if cut from the steel bar would cost 50 cents per pound), we collect all the broken and short high speed tools that cannot be further used on planers, shapers, lathes, etc. These are hammered into blades ⅝x1¼x5 inches long. The cost of material for the blades is covered by the cost of labor in hammering out the steel plus its scrap value which is very small. So much for the economy in procuring material.

We will now turn our attention to the design, upon which depends the efficiency. The bodies, after having been bored, turned, and faced, are milled with slots ⅝ inch wide, ¾ inch deep, 1½ inches apart, at an angle corresponding to a predetermined helix or spiral. The blades are then fitted and slightly caulked. The cutter is then set up on a universal milling machine, and the front of the blades milled spiral. This gives a constant angle of rake or lip from one end to the other. This insures an equal strain along the whole length of the blade. On the other hand, if the blades are merely put in on an angle and not milled spiral, the lip or rake of the cutter is irregular. It can readily be seen that from one end of the cutter to the center there will be a decreasing lip, while from the center to the other end of the cutter there will be an increasing drag. This causes an unevenness in the cut and also a tendency to break and pull out the blades on the drag side. So much for cutters having a diameter over six inches.

Inserted tooth cutters with a diameter much less than six inches are not practical, due to the fact that a slot cut at an angle across the top of the cutter body would be very irregular in depth, hence the impossibility of holding the blade. Take for example a blank cutter body 5 inches diameter, 10 inches long, cut a slot through the top at an angle of about 15 degrees, you would have a depth of about ¾ inch in the center, while at either end there would be no depth to speak of. This can be avoided, however, by dividing the cutter into short sections, thereby lessening the unequal depth caused by cutting a slot at an angle to the axis of the cutter, but the high cost of this method does not warrant its adoption.

The general practice, in making cutters of smaller dimensions, is to use carbon steel costing about 14c per pound. This is altogether unnecessary and extravagant. Billet crop ends selected from high carbon billets—that is, mild steel with about .45 carbon and about the same percentage of manganese, and not more than .05 sulphur and .05 phosphorus, such as are used for driving axles, piston, and side rods—carefully hammered, outclasses in every way the ordinary tool steel. In the first place, its cost, hammered to size, is about 1½c per pound, as compared with 14c per pound for tool steel. Secondly, it is tougher, and the teeth will not break when a heavy cut is put on, such as is the case with tool steel, and the cutting edge stands up equally as well. The success of this method of course depends upon the treatment of hardening. This, however, is very simple, and consists of carefully packing the tools to be hardened in a mixture of salt and raw bone, placed in an air-tight box, which should be brought and kept to a heat of 1,500 deg. Fahr. from 24 to 48 hours according to size, then drawn from the box and quickly immersed in running clear water. There is no need whatever of drawing the temper, as the cutting edge has the correct hardness, while the body of the cutter remains very tough.

The question that you would naturally raise at this point would be: How deep can cutters be hardened in this manner? I may say that a depth of ⅜ inch can be reached, or in other words the cutter may be ground until the tooth is almost ground away, leaving no space for the chips to get away. When a cutter reaches this stage, it can be annealed, recut, and rehardened, as often as the thickness of material will allow, without affecting the quality of the cutter.

Some three years ago a test was made at our works to determine the advantage of using high speed steel cutters for a certain class of work, namely—milling out jaws of side rods, transmission bars, radius bars, combination levers, etc. It was found that the high speed steel cutters broke from the vibration and pressure brought to bear upon them, while cutters of the same design made from billet steel case hardened did the work very satisfactorily without breaking, running at the same speed and feed. I wish to remind you that what I have said so far regarding milling cutters refers to cutters used for straight milling. Cutters used for milling gears, taps, reamers, and irregular shapes should, in my opinion, be made from high speed steel.

In studying the efficiency and economy of tools, we must not forget to consider the quality and quantity of work required of them. I mean by this that we should not put a whole lot of work into a tool which is only to be used for one job, and then probably becomes obsolete after it has been used only once. We now come to tools such as are used on lathes, planers, shapers, and slotters. There are many brands of high speed steel on the market at the present time, and I have tried almost all of them, but will not express my opinion regarding their merits, as it would make this paper appear as an advertisement. I believe, however, that if we wish to ascertain which is the most efficient steel, we should give every brand an extensive trial, making an individual record of each, and determining which is the best, as compared to the price paid for it. Different shops have different materials to contend with, and the formulae used in the composition of steel differ, so that some brands are better for cutting one class of material, while other brands are better for cutting other classes of material. This is why I contend that each shop should test out every brand and see which is best adapted for its requirements.

High speed steel is an immense item in large machine shops, and great care should be exercised in order to avoid waste. A great saving may be made, by observing the following practice. In making finishing tools, instead of using a piece of high speed steel, say 1¼x2¼x15 inches long, costing about six dollars, we go back to the old reliable,

*From a paper delivered before the Canadian Railway Club.

and use a piece of billet steel, leaving it as large as the tool post will admit, and weld a tip to it made of high speed steel. The finished cost of this tool is abont one-eighth of the solid high speed steel tool and is just as efficient, for these reasons: The billet steel is sufficiently strong to withstand the pressure brought upon it for a finishing cut. It does not require dressing any oftener than the solid tool, but it does require a little more care.

I will now explain a little more clearly how this tool is made. As stated before, we take a piece of high carbon billet from the scrap heap, and draw it out to the required dimensions. One end is then scarffed ready to receive the high speed steel tip which is wedge shaped. The toolsmith fits the two parts fairly well together before welding to ensure a neat weld. The parts after having been prepared are then heated, the tip being allowed to heat longer than the body, owing to the necessity of the former being of a much higher temperature than the latter to allow for welding. When both are at a welding heat they are quickly withdrawn, a piece of Lafitte welding compound is placed between them and hammered lightly together. The tool is then reheated, care being taken to place the nose of the tool in such a manner that it will be most exposed to the fire. When the required heat is reached the tool is quickly withdrawn and placed between a former under a steam hammer and given a light sharp blow. In case of the tip being displaced, it will not do to try and knock them into place again. The tip must be cut away and refitted, and a fresh piece of the compound used. The tool is then treated in the same manner as a high speed steel tool. These tools have been used until the tip has been ground right down to the weld.

I would not advise making heavy roughing tools in this manner, as the billet steel body would not stand the pressure required by a roughing tool such as is used on a heavy planer. A tool of this description, however, answers well when used on a lathe where the point does not project far from the tool post, also where the cut is continuous and not intermittent, as is the case on a planer. You can readily see where the saving comes in, if this method is only applied to finishing and lathe tools.

I will now draw your attention to twist drills. Twist drills made from carbon steel with the exception of jobbers' drills, that is, drills up to ½ inch diameter, are almost a thing of the past, high speed steel drills having taken their place. The original design of the high speed drill was exactly the same as the ordinary carbon drill with the exception of the material used. This, however, has proven to be inefficient and expensive due to the following reasons: In the first place, to obtain proper results from a high speed steel drill, it is necessary to have adequate space to allow the chips to free themselves from the drill, as the flutes will soon choke up owing to the increased feed and speed of the drill. The fluted high speed drill has not this advantage. It is expensive for this reason. To make a drill of this design, it is necessary to use a round bar of solid steel, cutting away 50 per cent of it to form the flutes. Yet there are men who will tell you that this design of drill is the best and cheapest on the market.

I will now give my opinion as to which is the best high speed drill and the reason why. A high speed steel drill with a twisted section about half way between the flat twisted section and the standard milled drill is the most efficient and economical, economical from the fact that it takes just one-third of the steel to make it, and efficient because of the adequate space for the chips to clear, thus preventing clogging and choking. The feed can be doubled due to this advantage. I have found in my endeavor to reduce the cost of tools, that in the average shop where locomotives and heavy machines are built, they have sufficient equipment to make efficient high speed drills with a saving of from 10 to 50 per cent. This percentage is not exaggerated. The same may be said of all kinds of taps, especially those used in boiler construction. These remarks may seem severe to the tool supply men here with us to-night, but this is one point which I feel that I cannot leave out, seeing that our subject is along the lines of economy.

A few words may be said regarding reamers. There are many styles of straight reamers, all of which have their advantages, which leaves me with nothing to say regarding them. Taper reamers are different in their action, however, inasmuch as the whole part of the reamer that comes in contact with the work is cutting equally, whereas, in the straight reamer, the extreme end is the only part that cuts, the rest of the reamer only acting as a guide. It is this difference of action that I now wish to discuss. In all railroad shops there is a great amount of taper reaming to be done; this calls for a different class of reamer. Having visited some of the large locomotive works and inquiring from others, I find that their practice is to use the straight fluted taper reamer—some of them have the teeth staggered, others equally spaced. I beg to state that this style of reamer is decidedly wrong. Reamers that are required to cut equally their full length of flute should be milled with a left hand spiral cutting edge, having an angle of about 20 deg.; the pitch or distance between the teeth should be about ¾ inch, leaving ample space for the chips to clear, thus preventing clogging and tearing of the hole. The advantages of this style of reamer are: It takes about 30 per cent less power to drive it; it never chatters; it never digs in; the tang does not twist off; the teeth do not break off; they are easy on crank shafts and can be driven with an air motor, where straight fluted reamers would stick. Now this may appear that I am claiming a little more than what is true, but these are actual facts that have been tried and proven.

There are two reasons for the success of this style of reamer, namely, the spiral cutting edge which gives the reamer a shearing action instead of a straight drag (which must necessarily follow with a straight flute), also to the fact that the line of cut parallel to the length of reamer is divided, due to the angular cutting edge which is not parallel to the line of cut. The even and regular curl of chip made by this reamer will also convince you of the correctness of design. The cost of these reamers is a trifle less than the straight fluted reamers, on account of the fewer number of teeth to be cut. This applies generally to reamers having a diameter of 1½ inches and under, with a flute of from 14 inches to 16 inches, standard taper $\frac{1}{16}$ inch to 12 inches.

A word or two may be said regarding reamers of large diameter, such as crosshead reamers both for piston and wrist pin fit. For cheapness and durability these may be made in the same manner as solid milling cutters, as mentioned in the previous part of this paper. Select a piece of high carbon billet from the scrap heap, have the forging well hammered, machine and case harden, and you will have a tool that is equal to the finest tool steel made. You will find that the cost will be about one-tenth of that of good tool steel.

There are many other items of interest whereby great savings can be made, but as our subject covers such a wide area, I must confine my remarks to one or two thoughts in general. Before concluding, I wish to state that an immense saving may be made by annealing all broken and worn-out tools, immediately they are out of service. This being done they should be arranged in open bins or racks, so that when the foreman of the tool room requires material, he looks over his stock of annealed scrap (I mention annealed for the reason that very often a piece of scrap material is available, but it is necessary to wait while it is being annealed) and very often finds exactly what he wants without drawing from the regular stock.

Another feature regarding economy, is the correct distribution. I mean by this that every man should have all the tools he requires and no more. I say this because it is a well-known fact that workmen have a habit of collecting and storing up under lock and key, all the tools they can possibly lay their hands on, for their own individual use.

You can readily see that with this practice, if not watched and kept in hand, in large plants many thousands of dollars may be invested and nothing accomplished.

In summing up these remarks, I think you will agree with me, when I say that it is absolutely necessary in large plants, to have a man that is fully acquainted with every detail of tool design, tool purchasing, and tool distribution, to properly effect a system which would result in effi- be expected of the tool room foreman, as his duties confine him to the tool room. Under these circumstances the man appointed to perform the duties of economizing in cost, and designing efficient tools, should have the liberty, to watch all machine shop operations, and to have full supervision of tool room practices. This system is in vogue in some of the large locomotive works in the United States and one that I know of in Canada. This system, if adopted by some of the other large plants, would, I feel sure, bring about results worth noting.

Discussion.

This paper brought out considerable discussion and a number of questions were brought up, among which were: Would not the cost of annealing and shaping the billet steel make up for the difference in cost between it and high speed steel? Is it not very difficult to weld high speed to carbon steel? To which Mr. Townsend replied as follows:

I am afraid that my ideas have not been clearly represented to some of the members. Mr. Dalrymple referred to the fact that he did not consider it economy to draw out milling cutter blades from scrap steel. You must not lose sight of the fact that high speed steel costs on an average 50c per lb. My idea is, when tools are worn to such an extent that they cannot be used further as lathe or planer tools, they should be drawn out into blades for milling cutters. Their ciency, and economy. I might add that these duties cannot cost is small, as the toolsmith could hammer out 150 lbs. per day, and the boy's wages for shaping is very slight. Add to this their scrape value, and you will find that their cost is about one-fifth of the bar steel.

I think that the next point raised was, that we could not weld high speed steel to ordinary steel. It does not matter if we do only stick to it, if we can get a tool by sticking it to another piece of steel. Regarding the inserting of blades, I might say that I have just completed making a set of cutters. They form a cutter 33 inches long, 10 inches diameter, with 3½ inch hole. I would like you to figure the cost of these in high speed steel. I might say that these cutters have been made out of billet scrap ends, and their actual cost, including wear and tear, is just $24. Now, take the next best cutter, with high speed steel blades. We can manufacture them just about as cheap as they can be manufactured, and I think the same cutter made from high speed steel will cost $160. Now, taking it for granted that

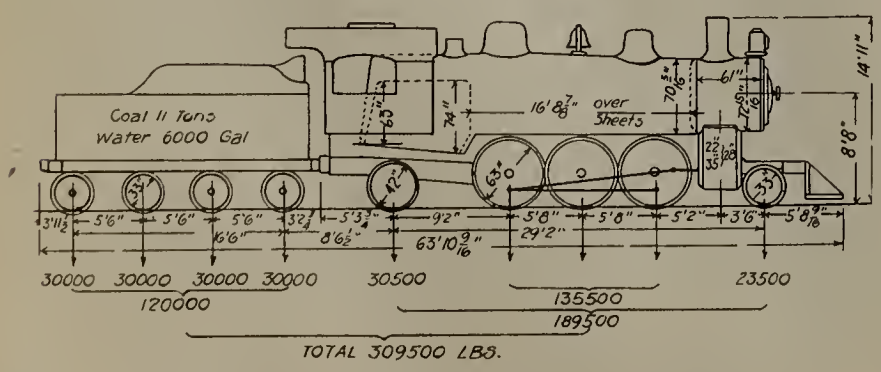

Diagram A—Prairie Type Compound—Class F-2.

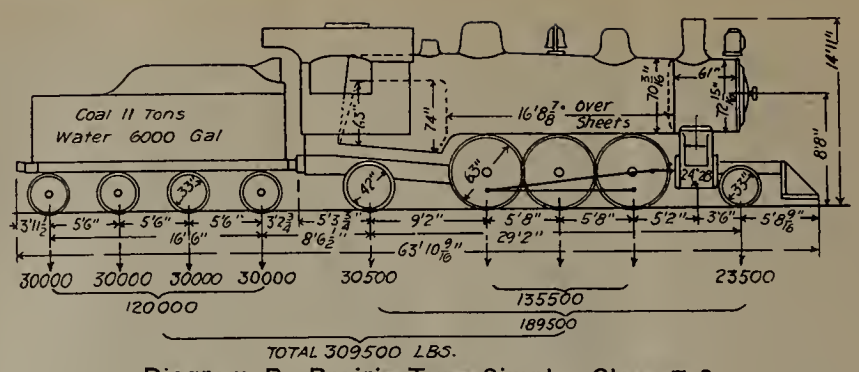

Diagram B—Prairie Type Simple—Class F-2.

these billet steel cutters are only half as good, we will have a margin of 300 per cent. For actual test I have had these cutters on a machine, and I have had them in operation for two days without grinding. I have had the inserted tooth cutters on the same machine and class of work, and we have only been able to use them for four days, which is only twice as long as the billet steel cutters.

There is another point about high speed steel drills. I would like to make it clear that these drills are made from worn-out planer tools which are too short, and they are forged into a section about half way between a flat section and the standard fluted drill. I find this section allows the chips to clear, which is necessary in a high speed steel drill, and it is more rigid than the flat-twisted drill. These drills are not welded—they are solid high speed steel drills.

In connection with the question why I did not interrupt the teeth for straight milling. A milling cutter with spiral cutting edges does not require these grooves, for the reason it is not cutting the whole width of the work at the same time, and there are no two points which come into contact with the work in line. The same principle applies to spiral reamers. We have these cutters made from billet steel. I might say that I do not attempt to case-harden iron, but the steel which we use ranges from .45 to about .55 carbon, and you cannot get the same results from steel with only about .20 per cent carbon.

LOCOMOTIVE STANDARDIZATION, CHICAGO GREAT WESTERN R. R.

Before the re-organization of the Chicago Great Western Railroad Company, the locomotive equipment included locomotives of various compound types. The plan outlined by the re-organization and which has since been carried out, included the reconstruction of all compound locomotives and the conversion of the prairie type passenger engines into Pacific type, maintaining as far as it was practical to do so, certain standards which had been adopted on the standard consolidation locomotive, forty of which have been purchased. In carrying out this plan, 26 engines of the F-2 class, shown on diagram marked "A," were converted from cross compound to simple as shown on diagram marked "B." These engines were given 24-inch cylinders; the steam pressure reduced to 150 lbs. and a Vauclain superheater was applied.

Ten cross-over consolidation engines, known as the G-2 class, were converted into eight-wheel switch engines with simple cylinders 22x32 and the steam pressure reduced from 200 to 165 pounds, which increased the tractive power from 37,550 pounds to 39,495 pounds; this increase in tractive power being made possible by the increased weight on drivers due to removing the engine truck. In order to properly balance the engine with the engine truck removed, heavy solid cast iron cab brackets were applied and as much metal added to the foot plate as was needed to weight the back end.

Previous to the reorganization of the Chicago Great Western Railroad, there were in existence twenty tandem compound locomotives, as shown in the diagram marked "C," known as Class F-4. Three of these engines have been changed to low pressure simple superheat engines. This

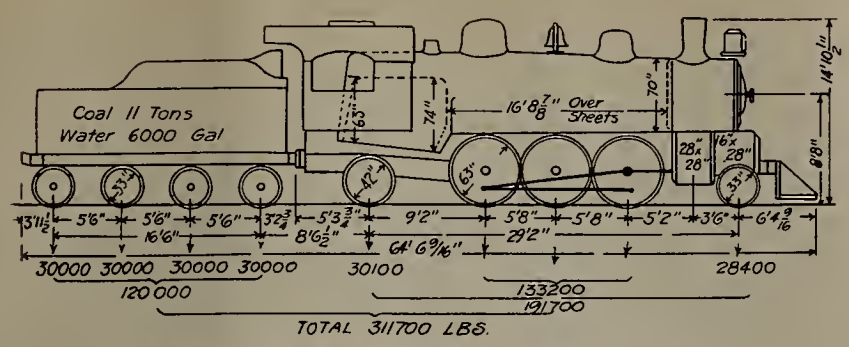

Diagram C—Prairie Type Compound—Class F-4.

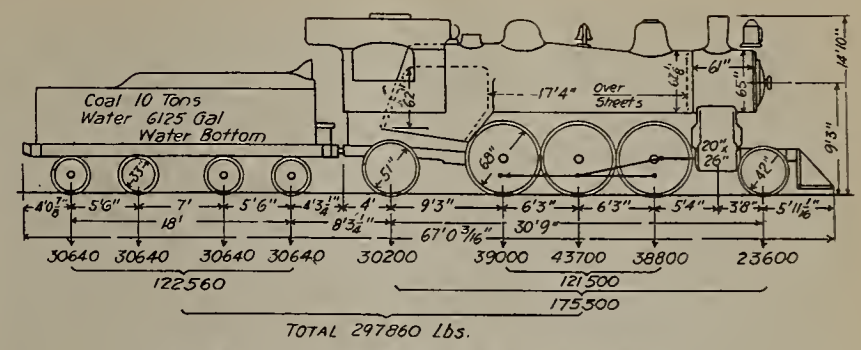

Diagram D—Prairie Type Simple—Class F-6.

change was made by taking off the high pressure cylinders and steam chest, bushing the low pressure cylinder to 24 inches and carrying the steam from the live steam port in the cylinder to the front of the old low pressure steam chest through a special designed steam pipe.

Previous to the re-organization of the Chicago Great Western Railroad Company, there were twenty prairie type passenger engines, known as the F-6 class, shown in diagram Marked "D." Twelve of these engines have already been converted into Pacific type engines, known as the K1 and K3 class, shown on diagrams marked "E" and "F." Those shown on diagrams marked "E" were given 160 pounds steam, 24-inch cylinders with slide valves and a Vauclain superheater and are known as class K1.

Those shown on diagram "F" were left with the original piston valve, 200 pounds steam, and the boiler and flues lengthened. As the remaining eight of these engines go through the Oelwein Shops, they will be converted as shown in the diagram marked "F" into K13 class.

In connection with this re-construction work on equipment, three of class F-3 prairie type engines were converted into H2 class Mallet type which have been previously illustrated and described in the Railway Master Mechanic.

Of the various types of small eight-wheel and mogul engines which the Great Western has in the past operated, all will either be sold or scrapped with the exception of one class of eight-wheel engines which will be used on light runs.

After the reconstruction work is completed the road will have ten distinct classes of locomotives where heretofore it had 38 distinct classes. These ten classes will comprise the following:

1 8-wheel,
2 Switching,
2 Ten-wheel,
1 Prairie,
1 Pacific,
1 Consolidation,
2 Mallet.

CAR WHEELS REVOLVING INDEPENDENTLY OF THE AXLE.*

By George L. Fowler.

The first car wheels were undoubtedly loose upon their axles; that is to say, the two wheels on the same axle could turn independently of each other. This arrangement was evidently unsatisfactory, for the custom was changed at an early date to the use of wheels rigidly attached to the axle and therefore revolving with it. This was the condition of affairs in 1870, which may be called the date of the advent of the present system of rolling-stock construction and operation.

The loose wheel had been advocated from time to time up to this date, but the efforts to introduce it had been spasmodic, and was soon abandoned.; so that it was really not until the decade from 1870 to 1880 that a systematic and determined attempt was made to develop a loose wheel for railway car purposes.

Attempts were made by several persons during this period to develop such a wheel. The underlying reason for these attempts was that, as the outside rail of a curve of a railroad track is longer than the inner rail, and as wheels of the same diameter are forced to roll around these curves in the same number of revolutions, it is evident that one or the other of these wheels must slip upon the rail. To cause this slipping a considerable amount of power must be expended, and if it can be avoided, just that much less power will be required of the locomotive.

The basic idea of most of the early attempts had been that of putting the wheels rigidly upon an axle, cutting the latter in two in the middle, and then coupling the two parts together so that they could revolve independently of each other. And the reason for the failure lay, not so much in the weakness of the method of fastening, or the failure to act in service, but because of the inherent defect in the principle itself, as will be explained later in discussing the operation and failure of an axle of this sort in detail. Examples of this type of axle are shown in the patent office illustrations of the designs of Richard Vose (1856), J. K. Nelson (1868), D. B. Hunt (1869), S. S. Hickok (1872), W. W. Towson and B. T. Babbitt (1877), and Jones and G. W. Millington (1878). These few patents, which have been taken to illustrate the general trend of these inventions, may be divided into two classes: Those that attempted to hold the ends of the axles rigidly in line, while still permitting them to rotate independently, and those wherein an effort was made to allow the axle to bend under the load and thus accommodate itself to the conditions of service. Of the rigid type, the Vose, Nelson, Hunt, Babbitt, Jones and Millington are examples. These were, for the most part, the earlier patents, and were followed by those of Hickok and Towson, in which an attempt was made to permit a bending movement of the axle under load.

I have not considered myself warranted in looking up the records of the tests of those wheels and axles in detail, other

*From report of the Block Signal and Train Control Board.

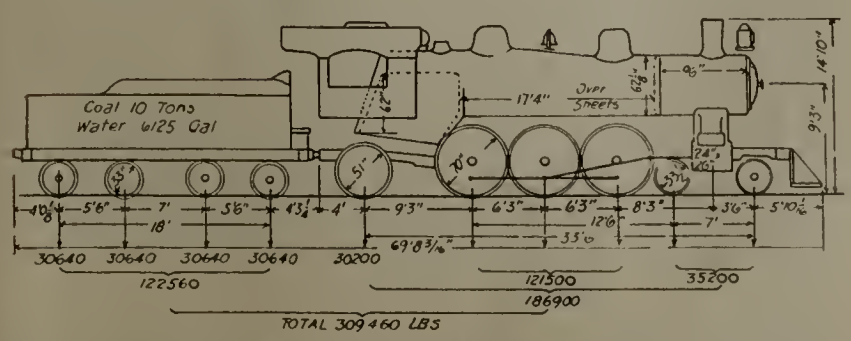

Diagram E—Converted from Prairie Type Shown in Diagram D.

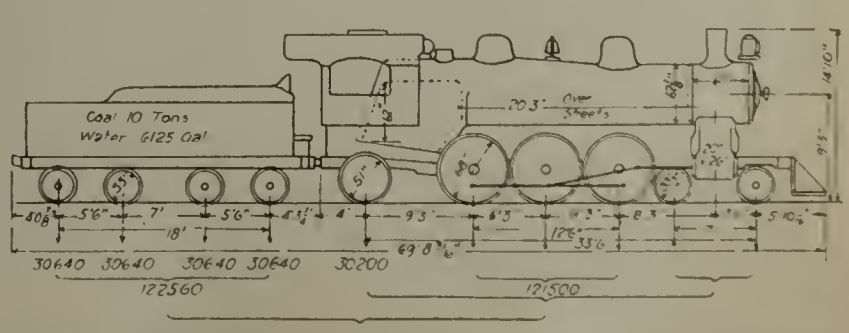

Diagram F—Converted from Prairie Type Shown in Diagram D.

than to be able to state that the trials were not satisfactory nor the results commensurate with the extra expense involved in the construction. This having been settled, the next move was that of placing one wheel loose on a rigid axle. Examples of this class of design are shown in the patents of S. & S. L. Hall (1876), Watkeys (1878-79), Baker and Spaulding (1878), and Sproull (1879). This design is a recurrence to the primitive type of wagon wheel with modifications of detail, the object of which was to permit the bending of the axle and, at the same time, permit the wheel to accommodate itself to such a fixture. None of these axles had more than a sporadic trial and no sustained attempt was made to make them a success. The owners were evidently discouraged as the result of the first trials and withdrew. This can be definitely stated to have been the case with Vose, Watkeys, Baker, and Babbitt, all of whom made tests that were failures.

A modification of the loose wheel is to be found in the use of a long sleeve. This first appears in the Vose patent (1856), and is also seen in that of Wells (1877), but finds its fullest exemplification in the patents of George W. Miltimore covering the period from 1871 to 1879, and who can be credited with having made the most persistent and successful attempt to design a loose or independent wheel for railway car purposes of all who have tried it. He was backed by ample capital and his attempt will be followed in some detail.

Miltimore's first patent was issued to him, in connection with Ellis Doty, in 1871, and was based upon a new idea in car-wheel construction. Instead of cutting his axle in two, he made it rigid from end to end and did not allow it to revolve, but keyed it to his axle boxes. On the outside of this he placed a rotating sleeve extending from one axle box to the other, and on the outside of this he placed loose wheels. In operation upon a straight track the wheels would remain stationary upon the sleeve and the latter would revolve on the axle. This because of the difference in the diameter of the bearings, the greater diamter of the outer causing it to hold while the turning was done on the inside or smaller one.

The first work with this axle was done on the Chicago, Burlington & Quincy Railroad, and I believe his first wheels were built in the shops of that company.

The sleeve upon which the wheels themselves were mounted was of cast iron and was exceedingly heavy, weighing about 400 pounds for each pair, and it must be borne in mind that this was for cars of 10 tons capacity. A number of runs were made with a car so equipped, and the results were so seemingly satisfactory that a stock company was organized and a passenger car equipped for demonstrating purposes, though it was recognized at the time that a great reduction in weight would be required in order that it might be made commercially successful. But in the short distances operated and the light loads carried the mechanical defects which afterwards appeared had not developed.

This exhibition car was taken east to Boston, and it so happened that on the run from Albany to Boston, over the Boston & Albany Railroad, a Mr. Dow Canfield was on the train and, noticing the peculiar appearance of the wheels, entered the car to inquire about it. Mr. Canfield was an officer of the Arlington Car Manufacturing Company, of Arlington, Vt., and as the axle company was looking for a place in the east at which the axles could be made and which would serve as headquarters, an arrangement was made with Mr. Canfield; and from that time on all of the work of the Miltimore Car Axle Company was done at Arlington. This was in 1872. From that time for the next seven years the work of development and experiment was energetically pushed. The first work was done on the Rutland & Bennington Railroad, where a freight car was equipped with a set of these wheels and axles and it was found to ride very evenly and smoothly, but nothing was done in the way of a service application to determine the wearing qualities of the device, nor were any experiments made in this country to ascertain as to just what saving in resistance was effected by the loose wheel. Then, in addition to the box car on the Bennington & Rutland, a four-wheeled caboose was equipped on the Boston & Albany, and this was run over various sections of the road in regular service.

The construction according to the first patent (No. 119831), was too crude to form an operable mechanism, as the spring or bending of the axle and the failure of lubrication to reach the moving parts caused the bearings to cut and the wheels to stick. This was quickly modified and the original simplicity done away with by the development of the construction shown in patent No. 133790, and this was the design that was placed upon the passenger car, already referred to, and brought east in 1873. In this there was a rigid axle of uniform diameter from end to end surrounded by a heavy cast-iron sleeve. This sleeve was fitted with brass bushings for bearings pressed in at each end which acted on the journal of the axle. This was a hardened pad fastened in the proper place and with a radius of curvature equal to that of the brass. The wheels were loose on the sleeve and were held in place by the journal box.

Lubrication was effected by filling the pockets at the ends of the sleeve with oil through the filling plugs just inside the wheel, and also by putting in oil through a hole drilled diagonally from the end of the axle. This hole was plugged at the outer end, and the oil poured in as required.

This construction worked efficiently and well on the first trials, the wheels running cool and apparently performing the functions for which they were designed.

The criticism that was made of the design was that it was complicated and the parts were inaccessible.

But in spite of the fact that the early trials showed good results, weaknesses and defects were soon developed, and these were for the most part of exactly the same character as those which had caused the failure and condemnation of designs based on the divided-axle principle. This was the fact that when any car axle is supported by its wheels and is loaded upon the projecting ends or journals outside the wheels, these ends will be caused to drop or hang down, the central part of the axle will be bowed up in the middle, and the wheels will be spread farther apart at the top than at the bottom. This and lubrication troubles were the things with which Miltimore had to contend, though the springing of the axle was the more serious of the two.

Occasional and repeated failures to lubricate with the design shown in patent No. 133790 simply caused the wheels to stick on the sleeve, for the most part, under which circumstances they acted merely as rigid wheels on an axle. But the springing up of the interior axle caused an excessive pressure to be put on the outer end of brass bushing in the sleeve and thus quickly wore it away into a bell shape. These were the troubles that developed on the Boston & Albany and Bennington & Rutland.

Incidentally Miltimore took out two patents (144347, of 1873, and 151543, of 1874), at this period relating to devices for varying the gauge of the wheels and for cushioning the side blow or lateral thrust, neither of which was ever tried.

The serious matter was the spring of the axle.

Miltimore was not a mechanic, nor even an educated man, but was merely fertile in resources. He therefroe failed to appreciate for several years the actual conditions. He did not have the reasoning or analytic faculty sufficiently developed to discover what was happening, and so jumped to the conclusion that the reason why the brass bushings wore out was that they were insufficiently lubricated; and so he turned his attention to the solving of the problem of lubrication and ignored the mechanical feature that lay at the root of his trouble. Hence we see that in 1874 he took out a patent that dealt solely with the problem of lubrication, and its application was as complete a failure as that which had gone before.

But soon after this date, in applying this design he learned

of the spring of the axle, and attempted to overcome it by making it abnormally thick in the center. This merely aggravated the difficulty, as the sudden change in axle diameter just back of the wheel seat caused the whole deflection to be concentrated at that point, and the wear on the bushings was worse than ever.

He then took the first step to strike at the real trouble, and that after five years of constant and unremitting work. In his patent No. 171835, of 1876, he shows a brass bushing in the sleeve held by a wooden collar or wedge. The object of this was to permit the brass to yield and accommodate itself to the bend in the axle. This might have proven efficient had the axle been revolving and the bushing stationary, but when the reverse obtained the wood lost its elasticity at once, the bushing became loose and conditions were worse than ever.

However, matters had progressed so far that in 1875 Mr. Canfield was sent to England and Denmark to attempt the exploitation. Nothing was done in Denmark, but in England a four-wheeled car was equipped, and the only running or resistance tests in the history of the work were made. As no dynamometer car was available, these tests consisted in merely letting this car run down a grade at known speeds over curves of different lengths and noting the distance required to stop, as compared with that of a similar car fitted with rigid wheels and axles. In every case the car with the loose wheels showed its resistance to be the less, because of the greater distance it would run before coming to rest. As to just what the actual difference was in this resistance there is no means of knowing, as the records are not available.

The next year, 1876, the company equipped its first trains for regular commercial service. These trains were operated on the narrow-gauge intramural railway at the Centennial Exposition in Philadelphia. Here there was a chance to develop the real weakness of the design, and it was done. There was constant and unending trouble with the lubrication, and the wear on the bushings referred to were very rapid. But the experience gained was utilized as a means to the later success. Meanwhile, in anticipation of this, and at the same time utilizing the experience obtained at Philadelphia, another improvement was made, and this is shown in the patent No. 179938, of 1876. In this there was a radical modification and simplification of the whole design, which was thus put on a working basis. In it the brass bearing in the sleeve was made with a ball upon the outside, so that, as it rested in the sleeve, it could assume any angular position relatively to the same, within limits, to accommodate itself to the springing of the axle. It was held in place by a ring driven in from the outside and itself held by a nut. It was prevented from turning in the sleeve by a pin fastened to the latter and projecting down, like a key, into a groove cut in the ball.

The rigid axle was turned off on the bottom to an eccentric bearing of the same radius as that of the box, which was one-thirty-second inch larger than the axle. These axles were of cold-rolled shafting 3¼ ins. in diameter. This gave a large bearing surface on the axle, without the necessity of waiting for wear, and a universally adjustable bearing. The sleeve was formed of two heavy cast-iron ends, into which a connecting piece of heavy wrought-iron pipe was pressed. This to reduce the weight.

Lubrication was obtained by drilling a hole in the end of the axle about ¾ in. in diameter and 13 ins. or 14 ins. deep, from which cross holes were drilled to the bearings beneath the brass. A cork washer at the end packed the joint between the oil box and the axle so as to prevent a leakage of the oil or grease. Then, in order to preserve the cleanliness of the wheels and truck, a projecting collar was screwed on the outside of the hub of the wheel; this led the waste grease back to a receptacle in the bottom of the oil box. The lubrication of the wheel on the sleeve was effected by leakage at the joints through the centrifugal action. It will be borne in mind that the movement between the wheel and the sleeve was very slight, being only that necessary to compensate for the difference in the rotation of the two wheels due to the difference in the length of the rails upon which they were running.

This design was applied to twenty passenger cars on the Gilbert Elevated Railway, now a part of the Manhattan Elevated system, in New York. At that time (1878) the road extended from Rector street to Fifty-ninth street.

These cars were built in Detroit and were run to New York on their own wheels. The lubricant used on this run, as well as thereafter, was the well-known Albany grease. In running from Detroit to New York at speeds of from 30 to 40 miles an hour there was no heating of the journals, and on reaching destination the paint on the wheels was as fresh as when first put on and there was no evidence that a single drop of grease had escaped. The cars were then put into immediate service, and made the run of about 4½ miles in 20 minutes. The road was then operated from 5 in the morning until midnight, so that these cars probably averaged from 150 to 170 miles a day.

Here again no dynamometer tests were made. As far as personal observation is concerned, there was no detectable difference in the ease of motion of the cars with loose or rigid wheels, either on curves or tangents, and so, the actual saving in motive power is unascertainable.

However, it was quite noticeable that the cars drifted around the sharp curves on this line very much more easily than did the trains equipped with rigid axles. Further than this, there was a noticeable reduction in the wear of the treads of the loose wheels as compared with those that were rigid, although both were subjected to the same brake-shoe action. The rigid wheels began to be removed for re-turning after the road had been in operation for a month, while in three months none of the loose wheels needed re-turning.

At one time during the summer of 1878 a test was made in order to ascertain the grease consumption of these cars. The boxes on one were filled, closed and sealed. At the end of six weeks the grease consumption had been about 7 ounces for each journal, and in that time all had run perfectly cool, and nearly all of the grease used had been deposited in the drip beneath the oil box. In short, from a mechanical standpoint the operation was all that could be desired, namely, ease of motion about curves, no grinding of the wheels on curves, reduction of wear of wheel treads, and economy of lubrication.

Owing to personal friction between Mr. Miltimore and the mechanical officers of the road, which need not be detailed here, but which culminated in the removal of all of the wheels from the road, the work was stopped and nothing more on an extended scale was done.

In 1878 Miltimore took out a patent (No. 200746) in which he divided his sleeve and coupled it together after the manner of the old divided axles, but he never built wheels and axles in accordance with this design. It was regarded merely as a protective patent to guard against infringement.

Miltimore's final design is shown in his patent No. 222833 of 1879. In this he abandoned his heavy cast-iron ends for sleeves, and substituted therefor an extension to the inside of the hub of his wheel. The oscillating box was put in the front end of the hub, and so the wheel was now made loose on the axle upon which it turned, and was merely held to gauge by the sleeve.

A collar on the sleeve held the wheels to gauge on the inside, and a nut on the ends of the pipe prevented them from spreading.

A passenger car was equipped with this design and run for a number of weeks on the Harlem Extension Railroad between Chatham, N. Y., and Bennington, Vt. This road is very crooked and has some steep grades.

In building the wheels and axles for this service, the shoulder on the pipe at the back of the wheel hub was first put on by upsetting the pipe in a die. This injured the metal to such an extent that the pipes soon broke and the car was run for several weeks with the sleeves in this condition, illustrating the safety of the device. These shoulders were afterwards formed by shrinking a collar in place; after which no further difficulty was experienced.

The Miltimore axle, as thus designed, was also applied to a horse car on the line between Troy and Lansingburg, N. Y. This was in 1879 and the service was light, but an unexpected difficulty was encountered. The car was put in service early in September and soon earned for itself the reputation of being an exceedingly easy car to haul, as it would pass curves almost as readily as it could be hauled on a straight track; so that it at once became a great favorite with the men. But when cold weather came and stones or frozen dirt were apt to be dropped and left on the rails, it was found that a quick and complete derailment immediately followed the striking of such an obstruction. The car turned so easily that the moment one wheel was stopped or checked in this way those on the other side of the car would run ahead of it, and it was not unusual to have the car run off into the road and not stop until it was at right angles to the track. After a few experiences of this sort the car was withdrawn from service.

The Miltimore wheel can therefore be considered to have been developed into a mechanical success, so far as operation was concerned. Its fate, then, may be regarded as an exemplification of the difference between a mechanical and a commercial success. It failed because of the excessive first cost, the complication of the details of its construction, the inaccessibility of its parts, and the impossibility of utilizing the ordinary car inspector to watch it and maintain it, as well as because of the fact that, as a general proposition, a loose wheel is not worth while.

The only other loose wheel which, so far as I know, a serious attempt was made to develop was that of Baker. This was put on ten cars on the Gilbert Elevated Railroad in 1878 at the same time as the Miltimore wheel. This was a divided axle, and was the subject of constant and repeated failures for about a month or six weeks, when it was removed. The whole trouble arose from the springing of the axle. There was a cramping of the wearing parts, rapid wear, and heating, with the resultant effect of excessive play and wabbly wheels.

My experience in these matters has led me to the conclusion that a divided axle can not be fastened together with sufficient rigidity to prevent this excessive cramping and, at the same time, permit of the required independence of motion of the two parts. The axle must be allowed to spring and flexible bearings must be provided; and when this is done the first cost and complication of parts prohibit its use.

In considering the value of a loose wheel to a railroad it must be remembered that its only value lies in its ability to compensate for the difference in the length of the two rails without requiring that one of the wheels on the axle should slip on its tread on the rail. Theoretically, there would be no saving on a straight track with wheels of the same diameter. But the two wheels never are of the same diameter, so there is always some slipping in the case of rigid wheels. On curves there is always a slip, but this is the same for the same angular length of curve regardless of the length of its radius, and is equal to a curve of the same angular length, having the distance between the centers of the wheels as a radius, and this may be taken at about 4 ft. 10 ins. Therefore, on any track making a complete circle, whether it be as a circle or with innumerable tangents between successive arcs, as in a belt line whose curves are all in one direction the total slipping will amount to the circumference of a circle whose radius is 4 ft. 10 ins. or 30 ft. 4.43 ins. The expenditure of power to accomplish this will depend upon the coefficient of friction between the wheel and the rail and the load on the wheel. My own investigations lead me to put the coefficient of friction between a cast-iron wheel and the rail at about 0.20 for loads of approximately 20,000 pounds. The extra effort then to move a loaded car of 100,000 pounds capacity, having about 19,500 pounds on each wheel, around a curve that formed a complete circle or one closed on itself would be about 118,443 foot-pounds per axle, or 473,772 foot-pounds for the car, or the development of 1 h. p. for less than 15 minutes.

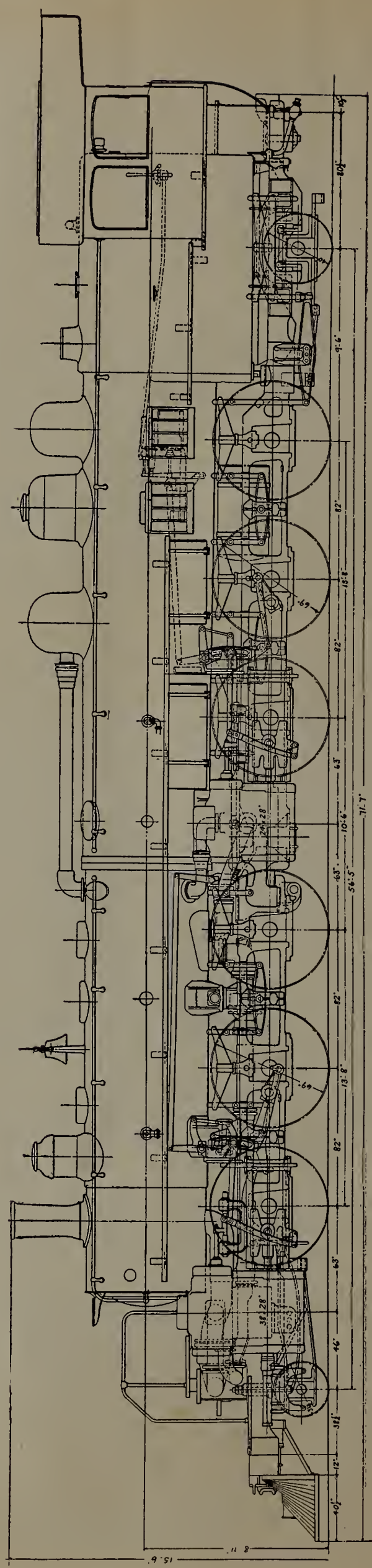

Side Elevation, Santa Fe Mallets, Rigid Boiler.

ARTICULATED LOCOMOTIVES WITH FLEXIBLE BOILERS.

That the Santa Fe is satisfied with the performance of its Mallet locomotives is evidenced by the fact that the Baldwin Locomotive Works has recently completed forty more Mallets for this road. These are in freight service on the Belen cut-off, where the maximum grade is six-tenths of a per cent, and though they are rated at 2,200 tons of cars and lading, they have actually handled 2,700 tons at a speed of 15 miles an hour on the above grade. All of the engines are coal burners, are fitted with Jacobs-Shupert fireboxes and Buck-Jacobs superheaters and reheaters and have a tractive force of 61,500 lbs. working compound. A very novel departure has been made with two of these engines, which is somewhat in the nature of an experiment. Instead of the usual rigid separable boiler, these two have boilers fitted with a flexible connection between the front and rear sections.

The locomotives with rigid boilers do not differ essentially from the usual Mallet type. Twenty-eight have straight-topped shells, while the remaining ten have a gusset placed immediately in front of the firebox for the purpose of increasing the steam space. The front boiler section contains a smoke-box, feed-water heater, combustion chamber, reheater and superheater. The main boiler section has a combustion chamber in its forward end which is surrounded by the separable joint. This joint is formed by two rings, riveted to the front and rear boiler sections, butted together with a V-shaped fit and held by thirty-six bolts.

The boiler is fed by two non-lifting injectors, which are placed right and left under the cab, and discharge directly into the water-heater, which is kept constantly filled. When the injectors are in operation, the overflow leaves the heater through two outlets placed in the manhole cover, and enters the boiler proper through check valves located a short distance back of the front tube sheet.

The barrel of the rear boiler section is composed of five rings. The first encloses a combustion chamber; the forward dome is mounted on the third ring, and the rear dome on the fifth, immediately in front of the firebox.

The steam piping is arranged with the usual slip joints used on the articulated type of engine. The grates are composed of finger-bars, and are arranged to shake mechanically in two sections, placed right and left. The drop plates are at the rear. The ash pan bottom slides are of cast iron, and are operated by compressed air. The front end is of the self-cleaning type, with an adjustable diaphragm placed in front of the nozzle.

The steam distribution is controlled by inside admission piston valves, thirteen inches in diameter. The valves have cast iron bodies, with L-shaped packing rings sprung in. The by-pass valves are placed above the steam chests, and the live steam ports are extended upward to a horizontal face, the port openings being covered by a flat plate, which, when the throttle is open, is held to its seat by steam pressure acting on its upper surface. Excessive pressure within the ports will lift the plate from its seat, and open communication between the two ends of the cylinder.

The cylinders are placed 88 ins. between centers, while the distance between the steam chests is 100 ins. Walschaerts motion is used, and the location of the steam chests enables practically all parts of the gear to be placed in the same vertical plane. As the main rods are connected to the second pair of wheels, the space available for the valve gear is limited, and a compact arrangement of motion has been designed, with the link and reverse shaft bearings bolted to the guide yoke. Each combining lever is pinned to a crosshead, which slides in a bracket bolted to the upper guide bar.

The high and low-pressure gears are controlled simultaneously by a power reverse mechanism, which is operated by compressed air. The air cylinder is bolted to the boiler shell on the right hand side, immediately in front of the firebox. Admission of air is controlled by a small hand lever, conveniently located in the cab; and the usual reverse lever is entirely dispensed with.

The frames are of cast steel, four and one-half inches in width, and placed 44 ins. between centers. The rear frames have separate back sections of slab form; these are arranged to accommodate the trailing truck, which is of the Rushton type, with outside journals. The equalization of the rear group of wheels is continuous on each side of the locomotive.

The articulated connection between the frames is effected by a single cast steel radius bar, which is bolted to both the

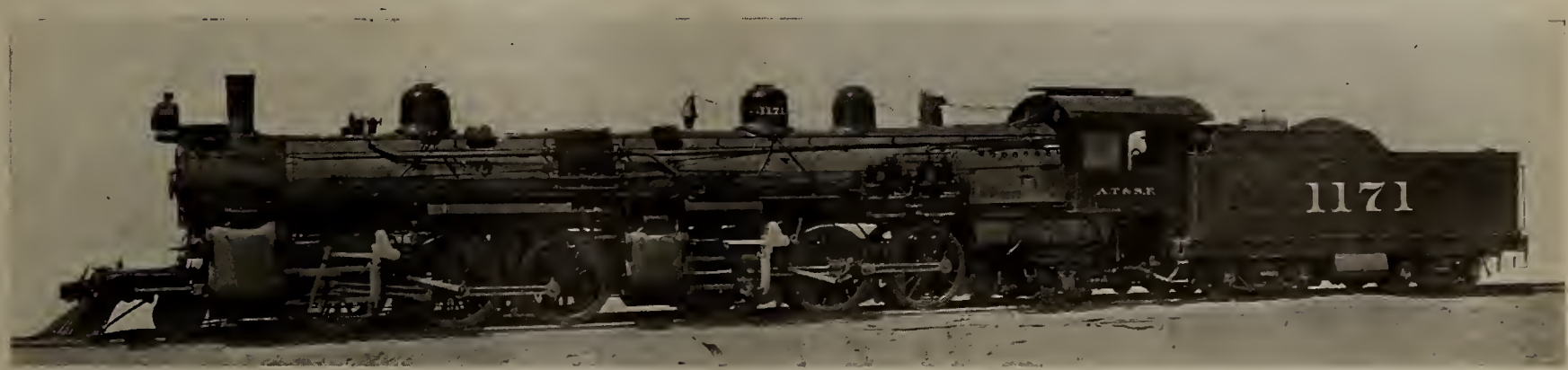

Articulated Locomotive with Flexible Bellows-Jointed Boiler.

Articulated Locomotive with Flexible Ball-Jointed Boiler.

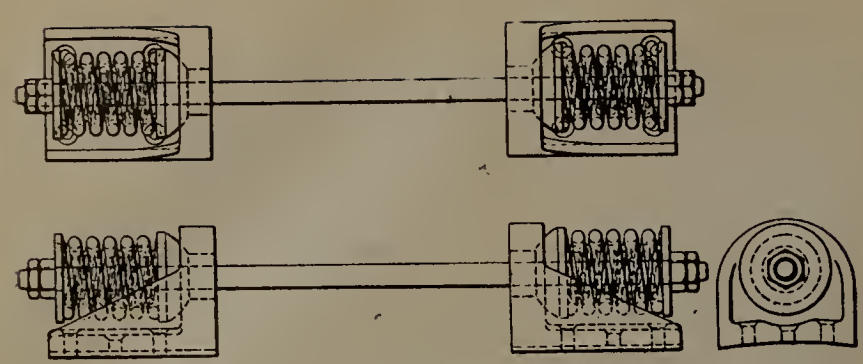

Device for Keeping Boiler in Alignment.

upper and lower rails of the frames, and extended forward over the rear driving pedestals. The center of the hinge pin is placed eight inches in front of the center of the high-pressure cylinders. The pin is inserted from below, and is seated at the bottom in a cast steel frame brace, and at the top in the high-pressure cylinder saddle.

The locomotives are supplied with Westinghouse combined automatic and straight air brake equipment. Air is supplied by two eight and one-half inch cross compound pumps, and the reservoir capacity provided is 100,000 cu. ins. The engines are provided with the usual number of sand boxes and lubrication and are also equipped with tire flange lubricators on the leading driving wheels of the front group.

The most interesting locomotives among this delivery of Mallets are the two with flexible boilers. The general dimensions are the same as the rest of the set, but the important difference is that the front section is rigidly mounted on the forward frames, which avoids the use of the sliding bearing. This gives a locomotive which will curve with a minimum amount of resistance and clearance.

The flexible boiler connections used on these two engines are entirely different in construction, engine 1170 having a double ball-jointed connection, while engine 1171 has a pleated or bellows form of connection. On engine 1170, the connection consists of two cast iron sleeves, fitted one within the other and provided with snap rings to keep the joint tight. Each sleeve forms a ball joint with a cast iron ring, which is bolted to the shell of the corresponding boiler section. These rings are made in halves, to facilitate assembling. The ball joints are kept tight by rings of soft metallic packing, which can be adjusted by set screws. The two boiler sections can thus move in any direction relative to one another, and full provision is made for expansion and contraction.

On engine 1171, the joint is composed of sixty rings of high carbon steel, having a thickness of No. 14 wire gauge. These rings are ten inches wide and have an outside diameter of seventy-five and one-half inches. They are made with a set, so that, when placed adjacent to each other, they form a series of V-shaped joints. The adjacent rings are riveted together at the inside and bolted at the outside, and the connection is bolted in place between the front and rear boiler sections. The products of combustion traverse the flexible connection through a cylindrical flue forty-four inches in diameter. This flue is riveted to the rear boiler section, and prevents cinders from lodging in the crevices between the connecting rings. These connections are shown in the illustration.

The high-pressure exhaust on these two locomotives is conveyed forward through a pair of horizontal pipes fitted will ball and slip joints. These pipes terminate in a cast-steel waist bearer, which spans the front frames and supports the rear end of the forward boiler section. The reheater is located immediately above the waist bearer, and is seated on a steel casting similar to that which supports the superheater. The two currents of steam, after being reheated, unite in the center of the drum and enter a single pipe connection in the front of the latter near the top. This pipe connection is carried forward through a large flue which traverses the water-heater. On reaching the smoke-box the steam enters an elbow pipe, and is conveyed to a passage cored in the low-pressure saddle. It then flows through short pipe connections to the low-pressure steam chests. The distribution is here controlled as in the locomotives with rigid boilers.

To assist in holding the boiler sections in alinement, a centering device is placed on each side, on the horizontal center line of the boiler. This arrangement consists of a pair of helical springs, which are seated in cast steel brackets riveted to the shells of the front and rear boiler sections. The springs are held in place between washers, carried by a horizontal thrust bar. When the engine enters a curve, the two boiler sections assume an angular position with reference to each other, and by reason of the compression of the springs on the outer side, the corresponding thrust bar is thrown into tension, thereby tending to bring the boiler sections back into alinement. The device is shown in the illustration.

The Santa Fe has also converted two Prairie type locomotives into flexible boiler Mallets at its own shops by the addition of a front section. These locomotives are equipped with a ball joint similar to the one discribed above.

It is of course necessary, in these locomotives, to place flexible joints in all pipes which pass the articulated connections in the frames and boiler. This, however, introduces no objectionable complication. The steam piping is simplified, as no flexible joints are required in the exhaust connection between the low-pressure cylinders and smoke-box There is also a distinct advantage in the avoidance of sliding supports under the forward boiler section, and the stability of the locomotive, when on curves, is not impaired by the lateral displacement of the boiler on the front frames, which necessarily occurs in the Mallet locomotive as usually built. The general dimension of these locomotives are as follows:

Gauge	4 ft 8½ in.
Cylinders	24 in. and 38 in. x 28 in.
Valves	Balanced Piston
Boiler—Type	Straight
Material	Steel
Diameter	70 in.
Thickness of Sheets	$\frac{21}{32}$ in. and $\frac{11}{16}$ in.
Working Pressure	220 lbs.
Fuel	Soft Coal
Staying	Jacobs-Shupert
Firebox—Material	Steel
Length	119⅝ in.
Width	63¼ in.
Depth	74⅛ in.
Thickness of Sheets	sides, $\frac{5}{16}$ in.
	back, ⅜ in.; crown, $\frac{5}{16}$ in.; tube, $\frac{9}{16}$ in.
Water Space,	front, 5 in.; sides, 5½ in.; back, 5 in.

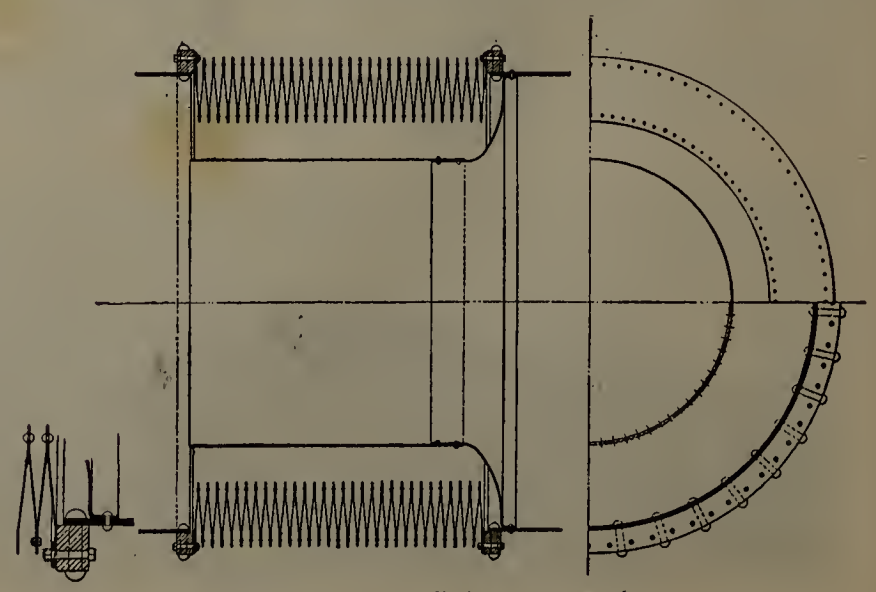

Bellows Type of Boiler Connection.

Fire Tubes—Material	Iron
Thickness	No. 11 W. G.
Number	294
Diameter	2¼ in.
Length	19 ft. 7 in.
Feed-Water Heater Tubes—	
Number	322
Diameter	2¼ in.
Length	9 ft. 10 in.
Heating Surface—Firebox	200 sq. ft.
Fire Tubes	3,376 sq. ft.
Feed-water Heater Tubes	1,893 sq. ft.
Firebrick Tubes	34 sq. ft.
Total	5,503 sq. ft.
Superheating Surface	390 sq. ft.
Reheating Surface	719 sq. ft.
Grate Area	52.5 sq. ft.
Driving Wheels—Diameter Outside	69 in.
Diameter of Center	62 in.
Journals, main	10 in. x 12 in.
Journals, others	9 in. x 12 in.
Engine Truck Wheels—	
Diameter, front	31¼ in.
Journals	6½ in x 12 in.
Diameter, back	40 in.
Journals	8 in. x 14 in.
Wheel Base—Driving	37 ft. 10 in.
Rigid	13 ft. 8 in.
Total Engine	56 ft. 5 in.
Total Engine and Tender	89 ft. 3 in.
Weight—On driving wheels,	317,300 lbs.
On Truck, front	29,000 lbs.
On Truck, back	46,000 lbs.
Total Engine	392,300 lbs.
Total Engine and Tender, about	562,000 lbs.
Tender—Number of wheels	8
Diameter of Wheels	34¼ in.
Journals	5½ in. x 10 in.
Tank capacity	9,000 gals.
Fuel capacity	12 tons

THE FATHER OF EFFICIENCY.

"Give an American a few tons of dynamite and a mountain to bore through in a month and he is happy," said an efficiency engineer to me the other day. "Americans love to do big things in a great hurry. They despise small things. A structural shop orders the supplies from a rolling mill. The big beams are promptly shipped. The angles and smaller pieces do not come for weeks or months. The superintendent of the structural shop pleads for permission to begin work immediately on material not deliverable for three months. If permitted to do the work ahead of time he clamors for permission to ship it. He is always ahead on big work, always behind on small work, and this means a great waste of time and energy."

But we are coming to the day when the smaller things will be recognized as of as much importance in the problem of production as the larger, the day when the man beside the machine and his capacity for work and wage will be more closely considered. In fact, in certain centers where the big activities hold sway there is already a mighty and successful effort toward right planning, right execution and right reward for the toiler. In these places such marvels of economy are being wrought by bright master minds as to stagger the imagination of the men of the old school of wasters whose motto was "Get there," and who recked not of the cost.

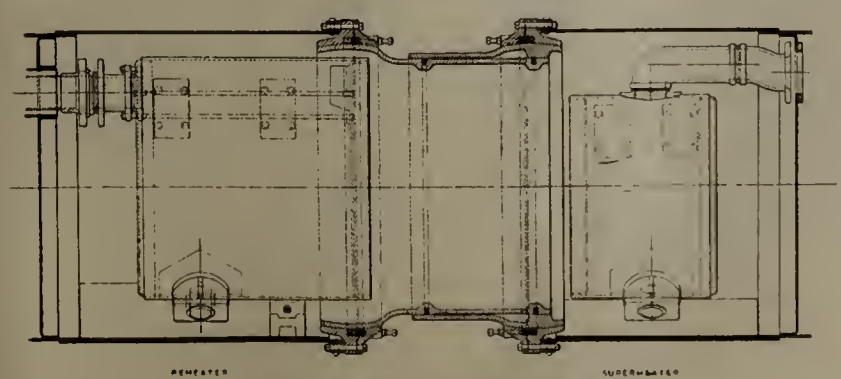

Detail of Ball-Jointed Boiler.

Mallet with Flexible Boiler.

Yes, the science of business and industrial efficiency, scoffed at by the headlong egoists who thought they were doing big things in the best way, but often were only misdoing and wasting, has been tried out and may be definitely and demonstrably declared to have won.

Who conceived this principle of efficiency, the thing that is now so intensively engaging the master minds of industry? Well, of course the idea of economy in production has always been insisted upon by the heads of great plants, but time has shown that it has not always been intelligent and successful economy, and as for humane dealings with employes, they rarely have been considered in the scale. But think of the economy both intelligent and successful and in which the idea of the fair deal is always uppermost; for without the fair deal there can be no economy and no efficiency. Let us give credit where credit is due. After a careful study of the genesis of this great movement I find that to Frederick W. Taylor, formerly chief engineer of the Midvale Steel Works, belongs the honor of introducing scientific efficiency in this country. Some of the men who are doing things in his line call him "the Father of Efficiency," and he deserves the title.—From "Raise Wages and Cut Costs," in March Technical World Magazine.

TIME REQUIRED FOR CHANGE OF POWER.

Records kept by the Pennsylvania Railroad Co. of the time consumed in changing from electric to steam motive power, and vice versa, at Manhattan Transfer Station, near Harrison, New Jersey, show that 98 per cent of the trains now go through the transfer in the time allotted for the change of power. From 106 to 109 trains pass through the transfer on weekdays. Nowhere else is a rapid change from

steam to electric engines made on so large a volume of traffic. The time allowed for uncoupling, switching, and coupling is four minutes. Owing to the difficulty of detaching the steam hose from the engine during cold weather, it has not been thought advisable to make a shorter time allowance during the winter months, but with the warm weather it may be cut down. Thus far the record for the change is one minute and thirty seconds.

Taking the trains passing through the transfer during the last week in which detailed charts were made, 108 went through the first day, of which 99, or 92 per cent made the change in four minutes or less. On the second day there were 109 trains, with 101, or 92 per cent making the scheduled change. One hundred and six went through the third day with a perfect record. Ninety-eight per cent was scored on the fourth day, Sunday, when 86 out of 88 made the schedule of four minutes. On the next day 105 out of 106 made a score 99 per cent perfect; and for the last two days the percentages were 94 and 98, with 101 out of 108, and 107 out of 108 trains passing through the transfer in the allotted time.

Railway Electrification at Boston.

Considerable interest has been centered in the report of a commission appointed by the Massachusetts Legislature on the feasibility of the electrification of all steam railways entering Boston. This report was recently made public and is abstracted as follows:

Cost of Electrification.

From the report of the New York, New Haven & Hartford Railroad Company it appears that if it should electrify its line or those of the Boston & Maine, its subsidiary, it would contemplate using the same system, with certain modifications and improvements, which it has adopted for the portion of its line between Woodlawn and Stamford, using the overhead system and the alternating current. The New York Central would also contemplate a modification of the system used upon its lines in New York. It would propose to use the same system in Boston, except that there would be a voltage of 1,200 volts in the third rail, instead of 600, this being a later development of the art that is considered to be an improvement.

It further appears from these reports that the cost of electrifying for passenger service would be as follows: For the Boston & Maine Railroad, $18,889,192; for the New York, New Haven & Hartford Railroad, $13,862,750; for the Boston & Albany Railroad (including a credit for equipment released), $6,413,300; total, $39,165,242.

These estimates are based upon electrifying the following mileage:

New York, New Haven & Hartford Railroad and the Boston & Maine Railroad.—15.46 miles of four-track road, 128.07 miles of double-track road, 32.42 miles of single-track road 111.20 miles of yardtracks and sidings; total, 461.62 miles of single track.

Boston & Albany Railroad.—20.90 miles of four-track road, 9.89 miles of double-track road; 25.00 miles of yardtracks and sidings; total, 128.38 miles of single track.

This makes a grand total of 590 miles of single track.

The New York, New Haven & Hartford Railroad estimate is based on electrifying the passenger service only. The Boston & Albany Railroad estimate contemplates electrifying also "some of the sidings and local freight stations on the main line."

It will be noticed that the Boston & Albany Railroad estimate involves a credit for equipment released, which it is believed may be used alsewhere. The New York, New Haven & Hartford Railroad, however, does not allow any such credit. Its remarks with reference to this matter are as follows: "The electrification of the Boston suburban district would release a large number of steam engines and passenger coaches, which should properly be credited to the construction estimate; but as there is no apparent opportunity for the utilization of so large an amount of equipment of this special type, and as its value for resale would be so doubtful, it is not practicable to assign values to this item."

With reference to this credit for equipment released, if such equipment is needed on another portion of the line, where it would obviate the necessity of purchasing new equipment, it would seem proper to allow the credit. If, however, the equipment would have to be sold, it would probably bring much less than its value; and, according to the rules prescribed by the Interstate Commerce Commission, the difference between its cost on the books, as of July 1, 1907, allowing for any reserve for depreciation, and the amount it could be sold for would have to be charged to operating expenses. This charge, even if distributed over several years, would probably more than offset the interest on the credit, so that it would seem more proper to ignore such credit in considering the cost of electrification, as has been done in the New Haven estimate.

The expense estimated by the Boston & Albany includes not only the cost of electrification itself—that is, the cost of power houses, shops, machinery, transmission lines, signals and equipment—but it also includes about $1,000,000 for track and station changes made necessary. The New Haven estimate, on the other hand, is for electrification alone, and there are other expenses, necessarily involved, which have not been included. This electrification should presuppose the elimination of at least the principal grade crossings, the expense of which has not been included in the above estimates and which is already authorized by statute. It would also involve considerable changes in tracks, structures and road-bed. The addition of the incidental but necessary expenses would considerably increase the figures given above and would bring the total cost involved in the electrification, for passenger service only, not including grade crossing elimination, to above $40,000,000.

In studying the estimates of cost submitted by the railroad companies it must be borne in mind, the board states, that they cannot be compared on a mileage basis, although the mistake is often made of doing this. The following are the facts:

Estimate for Metropolitan District of Boston.

Boston & Maine and New York, New Haven & Hartford lines (including South Terminal, but not including incidental charges)—		
Total estimated cost		$32,751,942
Single-track mileage		461.62
Cost per mile		$71,000
Boston & Albany lines (including incidental charges)—		
Not including equipment released—		
Total estimated cost		$7,520,300
Single-track mileage		128.38
Cost per mile		$58,000
Allowing for equipment released—		
Total estimated cost		$6,413,300
Cost per mile		$50,000
Total number of passengers in and out annually—		
At North Station		25,750,000
At South Station—		
New York, New Haven & Hartford Railroad	24,750,000	
Boston & Albany	7,950,000	
		32,700,000
Total		58,450,000

All lines in Boston—

Total estimated cost, not including equipment released nor incidental charges	$39,272,242
Total single-track mileage	590
Average cost per mile	$66,000

Electrification in New York.

New York, New Haven & Hartford Railroad—	
Total estimated cost	$6,124,778
Single-track mileage	118.7
New York Central & Hudson River Railroad—	
Total estimated cost, including extension to Croton not in operation	$16,135,00
Single-track mileage in operation	140.8
Single-track mielage to be added	87.0
Total mileage electrified when extension to Croton is completed, 227.8 miles.	
Grand Central Station, total number of passengers in and out annually—	
New York Central Railroad	10,261,273
New York, New Haven & Hartford Railroad	9,806,466
	20,067,739
Total mileage electrified and in operation 259.5 miles of single track.	
All lines in New York—	
Total cost	$22,259,778
Total single-track mileage	346.5
Average cost per mile	$64,200

Comparison of Cost at Boston and New York.

In comparing these figures, however, it should be remembered that the New Haven estimate for Boston included not only the North Station, but also the entire South Terminal, the Boston & Albany estimate including only up to the terminal. It should also be remembered, with reference to the figures for New York, that the amount expended by the New York Central & Hudson River Railroad covers the cost of the power and distribution system for moving not only its own traffic, but the entire traffic of the New Haven line between Woodlawn and the Grand Central Station, and that it also covers the cost of extending the electrification to Croton, this extension not being completed. For this reason no figures are given for the cost per mile of the separate roads in New York, but only the cost per mile of the total.

The fact that the New Haven estimate per mile in Boston is greater than its cost per mile in New York is, therefore, of no significance, and does not indicate that the estimate for Boston has been too liberal. On the contrary the board was assured that, in making the estimates for Boston, advantage has been taken by both companies, as it of course should have been, of the results of experience in New York and of any economies which have been practicable in future installations.

Neither do these estimates for Boston indicate which of the two systems of electrical propulsion is the more economical, since the New Haven figures include the cost for both terminals, but leave out some incidental expenses.

The discrepancies in the figures are largely due to the fact, which has been often forgotten, that the cost of electrification dependes not only upon distance, but also upon volume of traffic. The power required to propel two equal trains simultaneously is twice as great as that required to propel one. It may cost much more to electrify a certain distance on a line of dense traffic than to electrify a greater distance on a line of light traffic. Not only is the distance to be electrified in Boston, as estimated, much greater than the distance now electrified in New York, but the total number of passengers to be handled in Boston is nearly three times that handled in New York; while the number handled by the New York, New Haven & Hartford and the Boston & Maine lines in Boston is over six times as great as the number handled by the Boston & Albany. These facts, together with the fact that different systems are used, account for the differences in the estimated costs per mile.

A fairer unit of comparison than the distance is the train mileage. On a map accompanying the reports of the companies the number of daily trains in both directions was shown for the lines of the Boston & Maine and the New York, New Haven & Hartford, and they may be taken from the timetable for the Boston & Albany. Dividing the lines to be electrified into sections, and computing the total daily train mileage of each, the accompanying results will be obtained:

Passenger Train Mileage in Boston.

Boston & Maine Railroad—	
Total estimated cost	$18,889,192
Total daily train mileage	7,437
Cost per daily train mile	$2,540
New York, New Haven & Hartford Railroad—	
Total estimated cost	$13,862,750
Total daily train mileage	7,375
Cost per daily train mile	$1,880
Total Boston & Maine and New York, New Haven & Hartford—	
Total estimated cost	$32,751,942
Total daily train mileage	14,812
Cost per daily train mile	$2,221
Boston & Albany Railroad—	
Total estimated cost (not including credit for equipment, but deducting incidental expenses, in order to be on the same basis as the New Haven figures)	$6,520,300
Total daily train mileage	3,619
Cost per daily train mile	$1,800
All lines in Boston—	
Total estimated cost, as above	$39,272,242
Total daily train mileage	18,432
Cost per daily train mile	$2,130

Owing to the fact that the entire New Haven traffic between Woodlawn and the Grand Central Terminal is handled by power furnished by the New York Central, only totals can be given for New York. These are: Total estimated cost, as above, $22,259,778; total daily train mileage, about 7,760; cost per daily train mile, about $2,870.

These figures are closer than the estimates per mile, indicating that the unit is more nearly a proper one. The figures are, of course, not accurate. The cost of terminal work seriously affects the estimate, as well as other factors. Trains are not all alike, and the train mile is not a perfectly correct unit of comparison. A multiple unit suburban train is not the same as a heavy through passenger train. A more accurate unit would be the car mile, or even the ton mile. It is not necessary, however, to pursue this analysis further, and the data are not available. It seems clear that the estimate for Boston agrees reasonably with what would be expected from the experience in New York. It was made by studying each element separately—power house, machinery, transmission, equipment, etc.—which is, of course, more accurate than to adopt any single unit of comparison.

Systems of Electrification.

The fact that the best method of electrification is still undetermined is shown by the fact that each company proposes for Boston a modification of the system it uses at New York. The disadvantage involved in the use of different systems by the two railroads is in some respects not as great in Boston as it is in New York. There, the New Haven trains run over the New York Central tracks between Woodlawn and the Grand Central Terminal, and it was impracticable to equip that portion of the line, including the tunnel, with the overhead system. The New Haven locomotives, therefore, had to be designed so that when they en-

tered upon the New York Central tracks they could take the direct current from the third rail, and the electric machinery in the locomotives had to be adapted for such change in current. At Boston the trains of each railroad would run almost entirely upon its own tracks; to be used by the trains of both companies, these tracks could be equipped both with a third rail and with overhead conductors. The electric locomotives could be equipped on each line simply for the system adopted by that line. In case the third-rail system should require overhead construction at certain points in the yard, complications might arise which cannot now be formulated.

However, it would be distinctly unfortunate if the two great railroad systems entering into and operating in Boston should adopt different systems of electrification. It would be somewhat similar to a break of gauge. The ultimate relations between these railroads and the future connections between them cannot now be foretold. The next 20 or 25 years, or even a less period, may bring about changes which would not be believed if they were predicited now, and the expenditure of large sums of money by thse corporations to install different local systems might in the future be the cause of great waste and the infliction of unnecessary financial burdens upon them and upon the public. It would seem unwise to unduly hasten electrification in advance of standardization.

Advantages of Electrification.

Among the advantages of electrification the board mentions the possibility of utilizing the space over the tracks, the saving in fuel, the diminution of corrosion of overhead structures, the saving of switching in terminals if the multiple unit system is used, and the added convenience to passengers due to the absence of smoke and cinders.

Some of these advantages are considered real and would result in economy of operation. The saving in fuel is considerable and undoubted. The corrosion of overhead structures, due to the smoke and steam from locomotives, is diminished in proportion to the amount of steam service eliminated. If the multiple-unit suburban service is used there are certain savings in train movements, especially if the trains can be run continuously around loops at the terminals and do not have to reverse their direction.

It is unquestioned that there are elements of economy in electrification which would be immediately felt. There are also some possible elements of economy which may be found to result but which are more or less hypothetical. For instance, with electrical operation high train sheds become unnecessary. The trains can be run into a terminal station occupying simply one story, and the space over the tracks is theoretically available for other uses. Whether it is practically so available will depend upon circumstances and is a real estate problem. If the operation of trains in a terminal station is by electricity instead of steam, without altering the location of the tracks, it is then a question whether it would pay to put up a building for commercial uses in which the first floor and basement would not be available. If the tracks are depressed, and the electrically operated trains occupy the basement floor, it would then be a question whether the rental which could be obtained from a commercial building on that site, of which no space would be available below the ground floor, would be sufficient to justify the expense of lowering the tracks and constructing the building. In some cases there may be a considerable profit here; in other cases, not. There would be more apt to be a profit if the site is in a large city, where the land is valuable; and in some cases the profit from the real estate investment might be such as to offset to a considerable degree, not only the expense directly connected with the building operations, but the expense of electrification. Such profit, however, is problematical and hypothetical, and cannot be depended upon as an element of economy, like the saving in coal.

The New York Central & Hudson River Railroad Company, in its reconstruction of the terminal in New York, is erecting over the tracks a high building, from which it expects to secure a considerable revenue. The Pennsylvania Railroad Company, on the other hand, whose station is farther down town and occupies the space under two city blocks, has not planned any such real estate investment on the block occupied by the main portion of the station. This block is covered by a building devoted solely to the purposes of the railroad and its New York offices, and is a comparatively low building. The other block, where the surface of the ground was not needed at all by the railroad company, has been taken by the United States Post Office.

Whether the electrification of a steam road will result in any final economy, independent of the interest on the capital expended, is a matter which cannot be determined by theoretical reasoning and must be learned by experience. The experience in New York indicates that, while there are undoubted elements of saving, electric operation under present conditions is more expensive than steam operation, independent of the interest on the capital expended.

Special Nature of Terminal Electrification.

There is much misapprehension with reference to this matter. The mistake is often made of comparing a case like the one under consideration with a case in which an entire line is operated by electricity. To electrify a few miles on one end of a railroad line, the rest of which is operated by steam, is a very different thing from electrifying an entire line. If the terminals only of a steam railroad are electrified, and the steam locomotives are run to the limit of electrification, the only change is that, instead of running into the terminal station, the steam locomotives are disconnected a few miles outside. The electrification of the terminal, therefore, does not very much decrease the expense of steam operation, but adds the expense of electrical operation. In such a case it is not so much a question of steam vs. electricity, but rather a case of steam vs. steam plus electricity; and it may be a measure of economy to extend electrification to a still greater distance from the terminal, because by such extension a saving can be effected in the operation by steam. This point of view affords one explanation of the fact that both the New York Central and the New Haven roads contemplate extending the limits of electrification at the New York end of their lines. These extensions are not made, the board was informed, because electrical operation is cheaper than steam, but because, under the circumstances, the extension of the electrical operation already installed will allow of economy in steam operation to be made. The extension of the electrification will also not involve a corresponding increase in the expense of electrical operation. So far as present experience shows it is definitely stated that it is not possible to electrify one end of a steam railroad for short suburban runs and make it pay.

The case is somewhat different, and more favorable, as regards strictly suburban traffic, which begins and ends within the limits of electrification. In such a case electrification would probably result in economy if the entire traffic could be handled by multiple-unit trains running continuously in and out. But the fact that there is a through traffic which is handled by steam to the limit of electrification, and that alongside of the electrified passenger service there is a steam freight service, complicates the case, reduces the possible saving and appeares to leave a resultant loss. Both the New York Central and, to a smaller extent, the New Haven lines run a multiple-unit suburban service in and out of New York in addition to their through passenger service and their steam

freight service, and thus far they find the expense greater than before.

Capital Investment for Electrification.

The greatest obstacle, however, to speedy electrification is the large capital required and the fact that the railroad companies would be obliged to pay interest upon the double investment, that for steam and that for electricity. Furthermore, in order to make electric operation in itself as economical as possible, a considerable portion of the plant for steam operation would have to be abandoned. Passenger coaches which are suitable for steam operation would have to be replaced by multiple-unit electric cars. Round houses, coaling plants, etc., now located at the termini would have to be provided at the suburban points where the steam service would change to electrical service.

According to the regulations of the Interstate Commerce Commission, a railroad company is obliged to replace in kind any of its structures or equipment out of earnings. If it abandons a round house and replaces it by another one of the same materials and capacity it must pay for the new one entirely out of earnings. The same is true with reference to equipment; it must pay out of earnings the book value of the locomotives or cars, less the salvage from them. Independent, therefore, of interest on new capital and of a possible loss from electric operation, which experience thus far indicates to be an actual loss, there is likely to be a further charge upon earnings, due to property replaced.

The capital required for electrification, as the estimates of the companies show, is exceedingly large. Not only is the apparatus expensive, but large spare units must be provided. If a locomotive breaks down it delays in general only the particular train which it hauls; but if an entire power station should fail all the traffic on the line would be stopped. It is, of course, quite improbable that an entire power station would break down, but it is not beyond the limits of possibility. A boiler explosion or a fire might produce such a result. The New York Central & Hudson River Railroad Company, in its New York installation, provided two cross-connected power stations, each with a sufficient capacity, utilizing its spare unit and working overload, to carry the entire demand of the service at the rush hours in case the other power station should fail. Moreover, duplicate transmission lines were adopted in the more important portions of the territory so that the failure of one of the lines would still leave the other effective. As a still further protection, storage batteries were provided with sufficient capacity to tide over the usual maximum periods of interruption of current supply that experience elsewhere had shown might be expected. These precautions were intended not alone to provide against accident, but also to provide for some future extension of the lines, so that they cannot be said to have been considered necessary entirely on account of the danger of accident. However, it has since been found that the use of storage batteries was unnecessary, and they are not contemplated in the estimate which has been made for the electrification of the lines in Boston. In the New Haven installation at New York the power station is stated to have an excess capacity of approximately 33 per cent.

The problem of electrification is, therefore, not only an engineering one but equally a financial one, involving providing the necessary capital to make an improvement which will result, so far as experience has yet shown, in increased expenditure for operation with an uncertain increase of traffic to offset it.

The railroad companies in this country need to spend very large sums of money each year to provide increased facilities which are demanded in order that they may be able to carry the increased traffic which results from increasing population and business. Additional tracks, sidings, yards, structures, heavier bridges and equipment, and many other things must be provided. These things are demanded by considerations of necessity. Safety appliances are also demanded for the protection of life, such as block signals, the elimination of grade crossings and many other expensive additions to railroad property.

Electrification, however, stands in a different position. It is, it is true, very desirable, but its desirability arises not from considerations of safety or of necessity, but mainly, if not entirely, from those of convenience. It is a luxury. The railroads can operate by steam as safely as they can by electricity. How far, then, is it wise to hasten by legislative enactment an improvement which is undoubted and which is desired by every one, but from considerations of convenience alone?

In the second place railroads are subject to legislative restrictions of many kinds. They have been required to spend large sums for safety appliances and their rates are subject to regulation by the state. To raise the large sums of money which they must spend for improvements they must offer inducements to private capital. Capital, however, is deterred from making investments subject to public regulation which cannot be foreseen and which may be unwise. It is likely, therefore, to be seriously deterred, and the business of the entire country to suffer correspondingly, if it has reason to believe that the state will compel the expenditure of large sums of money which it is not necessary to spend, except from considerations of convenience.

A wise and just regulation of the railroads by the state is undoubtedly proper. Railroad operation must be reasonably safe and rates must be reasonable. Capital, if it is assured that such regulation will be wise and just, will not be deterred. The board is of the opinion, however, that legislation compelling the railroads to adopt electricity as a motive power is unwise and not for the best interests of the public; and that it will make it more difficult, if not impossible, for the railroads to secure the capital which they need for necessary improvements which the country demands.

Difference in New York and Boston Conditions.

It should also be remembered, in connection with the electrifying of the lines within the Metropolitan District of Boston, that there are certain elements which make the problem there more difficult, more expensive and less necessary than in New York. These may be enumerated:

1. In New York the electrified lines consist of the main line of the Harlem River Railroad from the terminal station to North White Plains, a distance of 24 miles; and of the New York Central main line, which joins the Harlem line at Mott Haven Junction, 5.3 miles from the terminal, to Yonkers, a distance of 14.5 miles from the terminal. The New York, New Haven & Hartford Railroad joins the Harlem line at Woodlawn, 6.6 miles from Mott Haven Junction, or about 12 miles from the terminal, and is electrified to Stamford, a distance of 33.3 miles from the terminal, with an extension of the New Canaan branch 6.13 miles beyond Stamford. The main line from New York, therefore, divides into two at Mott Haven Junction, and one of the latter divides at Woodlawn into two, so that three electrified lines extend out into the suburbs.

In Boston the situation is more complicated than in New York, because not only is the mileage greater there, but there are some 20 main and branch lines leading into the suburbs. Even this number does not comprise all the branches, strictly included within the limits of the Metropolitan Parks District. There are other branches diverging within these limits, as for instance, the Plymouth branch of the Old Colony system, which diverges from the main line to Fall River at South Braintree; the Stoughton branch of the Boston & Providence, which diverges at Canton Junction; the short branch connecting Dedham and Islington; the South Reading and Newburyport branches of the Boston & Maine, both of which diverge from the main line of the western division at Wakefield Junction, and the Swampscott branch, which diverges from the main

line of the Eastern division at Swampscott. A strict compliance with the terms of the legislative resolution would apparently require that the bill should provide that short portions of all of those branches should be electrified. As far as railroad systems are concerned, however, the Metropolitan District has never been legally defined.

The status of the terminals in Boston is very far from permanent, and, indeed, radical changes will be brought about, involving both freight and passenger tracks, if the project for a tunnel between the two stations is carried out. The building of this tunnel would involve a complete rearrangement of the freight and passenger tracks of the Boston & Maine Railroad. It would also involve, to a lesser extent, some rearrangement at the South Terminal. The proposed tunnel under the harbor, connecting the Boston, Revere Beach & Lynn Railroad with the South Terminal, would also involve changes in the tracks, both freight and passenger, at the latter point.

In New York, on the other hand, before electrification was seriously planned—indeed, in the same year in which the legislature passed the act requiring electrification—the city and the railroad companies agreed on changes which were to be made at the terminal, so that plans for electrification could be made with a definite knowledge of what would be the future development of the terminal.

The public grade crossings are not yet entirely eliminated in the so-called Metropolitan District. There are 229 still remaining on the New York, New Haven & Hartford Railroad and the Boston & Maine lines.

In New York and vicinity there are no grade crossings on the main electrified line of the New York, New Haven & Hartford Railroad. On the New York Central & Hudson River Railroad there still remain 14 grade crossings on the electrified line, but the more important are under process of being abolished.

It is exceedingly desirable that the principal grade crossings should be eliminated before electrification is carried out. If they are not eliminated additional expense and waste will be incurred if the large expense of electrification precedes the elimination of these grade crossings, which is sure to follow in the not distant future.

To make the necessary track changes often required in eliminating grade crossings, and at the same time maintain traffic, which is dependent upon bonded rails and a third rail or overhead conductor, adds much to the cost of elimination and the difficulty of the work.

The cost of electrification, as contemplated in the so-called Metropolitan District, is more than twice as great as the cost in New York. Nevertheless, this sum, over $40,000,000, enables the companies to electrify to an average of much less than 20 miles from the terminals. In New York, on the contrary, an expenditure of about $22,000,000 enables the companies to electrify to distances of 24, 33 and 34 miles from the terminal on the three branches respectively.

Another circumstances which renders the problem of electrification in Boston, in compliance with the apparent desire of the legislature, difficult, if not impossible, is the situation with reference to the lease by which the New York, New Haven & Hartford Railroad Company operates the Boston & Providence Railroad. The lease provides that all improvements made upon the property must be made at the expense of the lessee, and must revert to the lessor at the expiration of the lease without adjustment or compensation. The suggested improvements would make the Boston & Providence Railroad line more valuable than before, and in executing a new lease that road could demand a higher rental from the New York, New Haven & Hartford Railroad on account of them, although the New York, New Haven & Hartford Railroad had made and paid for them. Before all the steam lines of the Metropolitan District can be electrified, therefore, some means should be found to place the ownership of the Boston & Providence Railroad with the New York, New Haven & Hartford Railroad.

It must further be observed that the situation in Boston is not one which affords such necessity for requiring electrification as the situation in New York. Electrification in New York was precipitated by the collision which occured in the Park Avenue tunnel Jan. 8, 1902, which resulted in the death of a large number of persons. The atmospheric conditions had so obscured the signals in the tunnel that they were almost invisible at any considerable distance. The operation of steam locomotives in a tunnel of any considerable length is undoubtedly not merely inconvenient, but the source of serious danger. The requirement which led to electrification in New York was, therefore, a reasonable one. Following the accident referred to, the legislature of New York, in 1903, directed the abandonment of steam locomotives in Park Avenue south of the Harlem River within five years. In the same year, as already stated, the city and the railroad companies agreed on changes at the terminal.

It will be observed that the New York legislature required the abandonment of steam locomotives only south of the Harlem River; that is to say, a distance of less than five miles. This is a very different matter from requiring the electrification of all steam lines in the Metropolitan District of Boston. As a matter of fact, it was impracticable to terminate electrification in New York at the Harlem River. Just beyond this point was Mott Haven Junction, and the traffic at this point was very congested. It would have been practically impossible to stop all trains at the Harlem River and make the change of power at that point; to do so would have involved greater delay and congestion. It was, therefore, necessary to carry electrification farther out, to points where ample space was available for loops, yards and buildings, and where there was not such a heavy traffic.

These illustrations show that no arbitrary line can be fixed within which electrification should be introduced. It would be impracticable to require electrification within the artificial limits of the Metropolitan Dstrict of Boston. A reasonable plan would probably involve making the terminals on some lines at points within the Metropolitan District, and on other lines at points without. The location should be determined by traffic, and not by geographical conditions.

In Boston what public desire there is for electrification is mainly, if not entirely, on account of the increased convenience which would result to pasengers and abutters by getting rid of the smoke. To do so in this case would logically require electrification not simply for passenger traffic, but also for freight traffic. In other words, aside from the construction of a tunnel between the North and South stations, which would necessarily require all trains through it to be operated electrically, there is no logical reason for requiring in Boston any electrification of steam roads, unless that electrification be for both passenger and freight traffic. If the freight traffic is electrified, the cost of the undertaking will be, of course, in excess of the estimates given above.

It is true that in New York the New York, New Haven & Hartford Railroad is about to electrify its Harlem River & Port Chester tracks, over which its freight trains run into New York City, and its through trains to Washington, the work to include electrification of the freight yard at Harlem River. This fact is sometimes referred to as another apparent indication that electrification is really profitable to the railroad companies and not difficult to carry out. As a matter of fact, there are exceptional reasons for electrification in this particular case. Since the electrification of the main line had been carried to a point east of the junction of the Harlem River branch at New Rochelle, this branch, if operated by steam, would have been in the nature of an island, with electrical operation on both sides of it. The freight

trains and the through express trains which use this branch and are ferried around New York City would, if this branch were not electrified, have to use steam entirely, even over the electrified main line between Stamford and New Rochelle, or would have to change to electric power at Stamford and back again to steam at New Rochelle. The use of steam locomotives under the overhead system is found to be quite objectionable. It will be seen, therefore, how local conditions rendered desirable the electrification of this branch.

The Smoke Nuisance.

With reference to the smoke nuisance, attention should be called to the fact that not only has this nuisance been very much dimished during the last year or two, but that the legislature of last year took still further measures to abate it. This act gave to the Board of Gas and Electric Light Commissioners authority to regulate the emission of smoke from all chimneys, including the stacks of locomotives, and provided for a gradual decrease in the density allowed, or in the time during which smoke of a given density shall be permitted. The board is required to enforce the provisions of the act; to appoint a smoke inspector, who shall engage in no other business, and such deputy inspectors as it may think proper; and any person or any corporation violating any order of the board is subject to a fine or not less than $10 nor more than $50 for the first offense, and not less than $20 nor more than $100 for every succeeding offense. Under the operation of this act, and with further efforts on the part of the railroad companies and the Railroad Commission, by the proper instruction of firemen and by other means, there seems litle doubt that the inconvenience due to smoke will be still further diminished.

Fares and Electrification.

Since experience thus far indicates that electrification is not a source of economy, but rather the reverse, and since a return has to be earned on the additional capital necessary, and a further charge to operating expenses made for property abandoned or replaced, there sems to be no escape from the conclusion that the railroads should be allowed to increase their revenues sufficiently to provide a return on the investment large enough to atract investors. It would not be fair, even if it were possible, to require the railroad companies to expend $40,000,000 or $50,000,000 for electrification in Boston unless they were also assured of an adequate return on that expenditure.

An increase in the rates of fare, however, might not increase the net revenue. In order to provide for interest on the cost of electrification, what the railroads must have is revenue, rather than an increase of rates.

A reduction of rates frequently increases the total net profits, and an incerase of rates may diminish the net profits. If interest on the cost of electrification on certain lines were provided solely by an increase of fares for the passenger traffic affected, it might, therefore, not increase the net revnue. The benefit of electrification in the Metropolitan District would be mostly felt by the short-distance suburban passengers, and the abutters who would be relieved from the annoyance of smoke and cinders. The long-distance traveler would not be especially affected, since the greater part of his trip would still be made with steam locomotives. In strict justice, therefore, if fares were to be increased, the burden should be laid principally on the short-distance suburban traffic. This traffic, however, is likely to be just the kind which is least able and willing to stand such an increase. Moreover, the traffic is precisely the traffic which is least stable, and most likely to desert the steam railroad entirely and patronize the street railway lines, if the latter are conveniently located.

It should be thoroughly understood by commuters and others who form the short-distance passengers that electrification of the steam roads in the Metropolitan District in all probability would, and in all fairness should, lead to an increase in the rates wihch they would have to pay. The Pennsylvania Railroad has increased all rates for tickets to and from the new terminal in New York. Thus to Newark, a distance of 10 miles, the price of single tickets has been increased $6 per month and 50-ride tickets $5 a month. For the railroads to gain the additional revenue needed by increasing the freight rates would be putting the burden where it does not belong, even in a greater degree than in correspondingly increasing the long-distance passenger rates.

It should further be said that low suburban rates tend to build up the suburban territory and to encourage and enable those who receive low wages to live away from the congested center of the city in districts which are more healthful. From this point of view an increase in the short-distance rates is a distinct disadvantage and would retard in many cases the building up of suburban territory. Such increase in rates might also lead to the diverson of much traffic from the steam lines to the street railways, and, as has been suggested, result in a net loss to the steam railroads. In such cases, the additional revenue required would necessarily have to be gained from the long-distance passenger traffic or even from the freight traffic, neither of which is benefited at all by electrification.

It appears, therefore, that the class of traffic which would most benefit by electrification is the class which is most likely to change and patronize some other form of transportation; that it is the least profitable part of the passenger traffic, and the part which is least able to afford the additional revenues which the cost of electrification would render necessary. In this respect the situation in Boston is distinctly more unfavorable than that in New York. The electrification proposed by the New York, New Haven & Hartford Railroad Company is essentially confined to a distance of 10 or 11 miles from the center of the city, with the exception of one or two lines which are carried somewhat farther. All of this territory, however, is served by the electric street-car lines connecting with the Boston Elevated system. It would be particularly easy, therefore, in the case of the Boston Metropolitan District, especially with the improvement of rapid transit facilities by street-car lines into the city and the construction of additional subways, for the traffic to desert the steam railroad lines and patronize the surface systems. The tendency would be increased if any increase of rates should be found necessary on account of electrification of the steam roads.

Conclusions.

As a result of the considerations which have been discussed, the Joint Board has reached the following conclusions:

1. The electrification of steam roads is a development much to be desired. It would add to the comfort and convenience of the public and would have advantages for the railroads as well.

2. The best method of electrification is still undetermined. The science is in a state of rapid change, and standardization is much to be desired before extensive electrification is undertaken.

3. So far as experience has yet shown, the electrification of the terminals of steam railroads under present conditions does not result in economy, but, on the contrary, in increased expense, aside from the interest on the first cost incurred.

4. If a greatly increased traffic should result from electrification this expense would be reduced and might be changed to a profit.

5. Electrification would probably result for some time in obliging the railroads to make charges to operating expenses, due to property abandoned or replaced, in addition to interest on new capital and increased expense of operation.

6. Electrification would, therefore, in all probability require an increase of pasenger fares and perhaps of freight rates to produce the revenue required to pay for it

7. Electrification, while desirable, is not necessary, nor is it required on grounds of public safety. It is desirable mainly, if not entirely, on account of added convenience and comfort.

8. There are other expenditures which should be made by the railroads, which are demanded by considerations of necessity, to enable them to meet the demands of increasing traffic and which should have precedence of electrification. To compel electrification would postpone these more important improvements.

9. The railroads are already subject to much regulation by the state and the nation. To require them to expend large sums of money for electrification would make it difficult if not impossible for them to raise the capital required to move the increasing traffic of the country and would thus hamper industrial development.

10. As a result of the foregoing conclusions the board believes that it is not wise nor in the public interest to enact legislation compelling any electrification of railroads.

11. To pass a bill making compulsory the electrification of the passenger traffic on all the steam railroad lines in the Metropolitan District of Boston within a stated time, as contemplated by the resolve, would be particularly unwise, because:

(a) Before such electrification should be carried out the difficulty presented by the lease of the Boston & Providence Railroad should be removed.

(b) Electrification is contingent upon other needs. Not only is it contingent upon the acquisition of the Boston & Providence Railroad by the New York, New Haven & Hartford Railroad Company, but it is contingent upon a definite decision being reached and a definite plan adopted for the construction of a tunnel between the North and South stations, and the rearrangement of the freight and passenger terminals on the north and on the south. It would be an inexcusable waste to electrify until the plans for these improvements had been definitely decided upon.

(c) The limit of electrification should not be definitely fixed as coinciding with the limits of the Metropolitan District. It should be dependent upon traffic conditions.

12. If a tunnel is constructed and used for passenger traffic in Boston this would necessitate electric operation through the tunnel and for a certain distance on either end, and this would naturally lead to an extension of the electrification to a reasonable distance beyond. If the tunnel is to be used both for passenger and freight traffic electrification must be adopted for both kinds of traffic. If the tunnel is not to be constructed at all the demand for electrification is based on the convenience which would result to the public from diminution of smoke and noise; and this demand, if logical, should require electrification for both passenger and freight traffic.

13. The traffic to be handled in Boston is nearly three times that at the Grand Central Station in New York; and, on account of the radiating traffic in Boston (as compared with the north and south traffic in New York) and the large number of lines in Boston (as compared with the single line with three branches in New York), the expense in Boston is very much greater. There is not sufficient justification for requiring the railroads to spend this sum of money here.

14. If electrification of steam roads, either for passenger or freight traffic, or both, is required by law, it should also be provided that the revenue may be increased so as to afford reasonable compensation to the roads for the expense involved, and in order to make it possible to raise the necessary capital.

15. If the expense of electrification is forced upon the railroads by legislative enactment, a fair increase of rates and fares will be inevitable, and it should fairly be laid upon Boston business. It may prove necessary to increase freight rates for this purpose. An increase of freight rates, such as the railroads are now applying for, is due to the general increase in cost of supplies and material, and the great increases in wages of employes which have been granted in recent years. Such increase of rates would be distributed over all the traffic and would not affect the commercial situation of Boston, as compared with other ports. An increase in freight rates or passenger fares, if made necessary by the legislative requirement of electrification in Boston, however, should fairly be laid upon the Boston business exclusively, and might add to the disadvantages under which Boston now labors.

16. The benefits of electrification in Boston will accrue mainly to the commuters and short-distance traffic, and also in a very large degree to owners of property along the lines electrified. To raise suburban fares simply would place the burden where it mainly belongs, but where it is least capable of being borne; and such action would in itself tend in some measure to discourage the development of suburban territory and to divert travel from the steam lines.

17. Electrification is probably the coming form of traction power; indeed, it is not improbable that at some time in the future all the trunk lines of the country over which there is heavy traffic will be electrified. The problem however, is not like that of providing safety appliances, such as air-brakes, signals, standard couplers, or the abolition of the car stove and replacing it by steam heat from the locomotive. All of these matters were required from considerations of safety. The public demand for electrification, however, arises not from considerations of necessity or of safety but from those of convenience. Considering that there are other improvements which are necessary in order to meet the demands of increasing traffic, the Joint Board believes that an improvement resting on considerations of convenience should be allowed to work itself out without legislative enactment.

18. Permissive authority should be granted for the construction of a tunnel connecting the North and South stations. If such authority is availed of, it will necessitate electrical operation and will lead gradually to the extension of such operation, as similar causes have led to such extensions in the neighborhood of New York.

19. It should be recognized that all improvements of this kind, whether they are the construction of tunnels or the electrification of lines, which afford greater facilities to the public and involve the expenditure of large sums on the part of the railroad companies, if not offset entirely by increased earnings or reduced expense, should be accompanied by such increase of fares or rates as will enable the roads to maintain a fair rate of return upon their total investment. In all such improvements the public is a partner in the undertaking. The principal benefit accrues to it, with no risk. Its attitude should be such as to encourage the legitimate and economical expenditure of capital, and to compensate it fairly and even liberally for any risks involved. Under the laws of this state there is little danger of a misuse of capital expenditures.

THE MAN WHO KNOWS.

"The railroad man of tomorrow will be he who knows and not he who supposes," says J. H. Waterman, president of the railway storekeeper's association, in an article in The Railway Storekeeper, which is very much to the point. As an instance of the man who "supposes," he gives this:

> "I was at a storehouse some time ago, and the storekeeper said to me: "Waterman, I want to show you something," and he took me out in the yard and showed me a frog made by the mechanical department. He said: "I ordered a one to six frog. There is a frog branded one to six. You measure it." I measured it and it measured one to seven. I

asked him to tell me about it. He said that when the frog was received he measured it and called the master mechanic's attention to it, who sent the blacksmith out to look at it, and the result was this. They received an order for a one to six frog; the blacksmith gave the order to one of the men; the man made a one to seven and branded it one to six. It was shipped for a one to six and was received by the storekeeper to whom I was talking as a one to six, but he refused to accept even the branded figures on the frog. He measured it and found it was a one to seven. One man knew what he was doing. The other men supposed what they were doing."

It is so easy to suppose but it is sometimes hard to know, and here is a chance for those in authority to impress upon young men especially the importance of being sure, of knowing. If impressed upon a young man early enough in life it becomes a habit which will pay him big interest. Our superintendents of motive power and master mechanics are there because they know; not because they suppose.

NEW ELECTRIC LOCOMOTIVES, P. R. R.

Nine more electric locomotives, aggregating about 40,000 horsepower, have been ordered by the Pennsylvania R. R. from the Westinghouse Electric & Manufacturing Co. The new locomotives will be of the same type as those which are now being operated in the Manhattan terminal, New York City, and will supplement the twenty-four already in use. The new locomotives are to be completed by July 1, 1911.

The cabs, frames, running gear and mechanical parts will be built by the Pennsylvania R. R. at their Juniata shops. The air brakes will be supplied by the Westinghouse Air Brake Co. The electrical equipments will be built and the complete locomotives assembled at East Pittsburg.

The Pennsylvania locomotives are by far the most powerful of the kind ever built. The locomotive is an articulated machine of double cab design. Each half carries its own motor and complete equipment and the two halves are coupled together at their driving-wheel ends. The frames, driving wheels and trucks of the running gear are similar in general character to those of the "American Type" steam locomotive.

The wheel and motor arrangement was decided upon only after careful experiments with several other forms, both of motor drive and wheel arrangement; the governing motive being to secure the greatest possible steadiness at speed.

The coupled ends are fitted with permanent couplings of twin drawbars and Westinghouse friction draft gears, so arranged that the leading half serves as a leading truck and the other half as a trailer in whichever direction the locomotive may be moving.

Each cab is complete with Westinghouse automatic and straight air brake equipment, apparatus for train lighting, electric headlights, pneumatically operated whistle and sanders, as well as its motor, unit switches and master controller.

Motors and Running Gear of New Electric Locomotive, Penna. R. R.

The machines are so arranged that, in event of one motor being cut out, the entire machine can be operated from either cab with the remaining motor. The halves are interchangeable and if one is out of service it may be replaced by another half while repairs are being made.

The unit switch field control permits two or more locomotives to be coupled together and all to be operated from either end of any one cab, and affords flexibility of speed regulation. It gives two additional running notches and at the same time economizes power consumption during acceleration.

The following are some of the characteristic features of the Pennsylvania direct-curent, 600-volt electric locomotives:

Weight and Dimensions.

Weight of locomotive, complete	156 tons
Weight on drivers	200,000 lbs.
Weight on each driving axle	50,000 lbs.
Weight on each bogie truck	57,000 lbs.
Total length over all, inside knuckles	64 ft. 11 ins.
Rigid wheel base of each half	7 ft. 2 ins.

Total wheel base of each half.....23 ft. 1 in.
Total wheel base of locomotive.....55 ft. 11 ins.
Diameter of drivers .....72 ins.

General Capacity.

Contract tractive effort .....60,000 lbs.
Maximum draw bar pull (recorded on test).....79,200 lbs.
Normal speed with full train .....60 mi. per hr.

Normal Service.

(550-ton Train to be Started and Accelerated on 2 Per Cent Tunnel Grades.)

Maximum Contract horsepower 4,000

Motor Data.

(Two Direct-Current Interpole Motors—Cast Steel Frames—Directly Connected Through Jack-Shafts and Side-Rods.)

Weight of each motor complete with cranks.....43,000 lbs.
Height of motor frame above cab floor.....5 ft. 6½ ins.
Height of center of shaft above cab floor.....2 ft. 1½ ins.

Since the opening of the Manhattan terminal on November 27, 1910, the entire through passenger traffice of the Pennsylvania Road in its Newark tunnels has been handled by the electric locomotives of this type without a hitch and to the entire satisfaction of the operating force. Very heavy trains far beyond the capacity of the usual passenger locomotive, have been handled over the tunnel grades with ease.

Pennsylvania Electric Locomotive with 8-Car Train at Tunnel Entrance, New York City.

NICKELIZED CHILLED CAR WHEEL.

By Robt. C. Totten.

Although millions of dollars have been spent in the last fifty years to improve the quality of steel, little has been done to improve the quality of a cast iron mixture. An advance has been made, in employing skillful chemists at foundry plants, but their analyses have only to do with the quality of old car wheels and pig iron to insure uniformity in mixture. It has not added any new improving element to the mixture themselves. Fifty years ago the only pig iron made was cold blast charcoal and the car wheels made from such iron were very much stronger than those made from the mixtures now in use. Cannon for the Government were made from the same quality of pig iron that was used for car wheels.

Now, the mixture for car wheels is graded to suit the price received for the car wheels, and differs very much in the quality. The following figures taken from the report of the "Association of Manufacturers of Chilled Car Wheels" in 1909 to the M. C. B. Committee, page 5, gives the following range in tensile strength, which is the proper standard to go by in estimating the strength of either a steel or a chilled car wheel. These figures give the present range in car wheel mixtures from foundrymen who know. Fixe mixtures of each kind gave as the highest tensile strength the following:

A—29,300 lbs per square inch
B—26,800 lbs. per square inch
C—21,800 lbs. per square inch
D—17,420 lbs. per square inch

It is hardly necessary to say that one-half of the above mixtures were too weak for a good chilled wheel, and if that proportion holds good in the 20,000,000 car wheels now in daily use. the danger line so far as car wheels are concerned, has been passed.

The peculiar advantage discovered in nickel to improve a chilled car wheel mixture is the fact that it unites with the combined carbon, and reduces a part of it to graphitic carbon, and at the same time adds greatly to its strength, thus giving the chilled surface of the tread a strong grey iron "backing." The wheels above referred to, show the following chemical analysis:

A—Combined Carbon .80
B—Combined Carbon .72
C—Combined Carbon .68
D—Combined Carbon .62

In other words, the tensile strength was in proportion to the combined carbon present. The effect of nickel on the above mixtures would have been to increase the tensile strength of A and B, 25% to 50%, and in C and D, the combined carbon would all have been turned into graphitic and there would have been no chilled surface on the wheels. Of course car wheels without any chilled surface would not pass the M. C. B. test, and thus dangerously weak mixtures could not be used with nickel.

The following figures have been reached in actual tests made by the Pennsylvania Railroad at Altoona from nickelized car wheel mixtures:

	Pounds Per Square Inch
Nickelized Chilled Wheel mixture	31,670
Nickelized Chilled Wheel mixture	33,830
Nickelized Chilled Wheel mixture	34,800
Nickelized Chilled Wheel mixture	41,910
Nickelized Chilled Wheel mixture	42,550
Nickelized Chilled Wheel mixture	43,698

The latter figures have never before been reached in a mixture of cast iron.

The M. C. B. Drop Test.

This test may be said to develop the elastic limit of a car wheel, that is, power to recover its original condition after a shock. It also develops any strains there may be in the casting caused by unequal contraction in cooling.

The following comparison of a nickelized chilled wheel with a very superior standard wheel under this test, proves that both the elastic limit, and the freedom from shrinkage strain were greatly in favor of the nickelized chilled car wheel After being subjected to a heavy "sliding test," a steel car loaded with 50 tons scrap and moved back and forth a mile to develop flat spots on the tread, and 33 inch wheels taken from the same axle, one nickelized and one standard, were subjected to the M. C. B. test, that is, a weight of 200 pounds, 12 foot fall. The M. C. B. requirement being 12 blows.

Nickelized.

305th blow small crack developed through core holes
330th Crack developed
355th 2nd Crack through tread
359th Piece broke out of wheel

Standard.

141st blow crack through flange across plate.
250th Crack developed
310th Another crack across tread.
319th Piece broken out of tread.

As showing greater resiliency, the nickelized wheel did not begin to crack until the 305th blow, while the standard began to give way at the 141st blow. These wheels were remarkably alike chemically,

.58 Silicon in the Nickelized
.60 Silicon in the Standard.

Incidentally it showed also that the Nickelized wheel was not on so great a shrinkage strain, it being claimed for the nickel alloy that it has a lower co-efficient of expansion than any other alloy known.

Rigidity and Stiffness of Flange.

As showing rigidity and stiffness where the materials are subject to wear and abrasion as in the flange of a car wheel, two other wheels from the same axle, one a nickelized and one a standard, were tested under hydraulic pressure, a steel tool being used, shaped on the end to the curvature of the flange,

The nickelized wheel broke at 70,000 lbs.
The standard wheel broke at 54,000 lbs.

A drop test of hammer weighing 19 lbs. falling directly on the flange showed 200% in favor of the Nickelized Wheel.

Brinnell Test.

Wheel without Nickel	485	495	
Wheel with Nickel	557	498	508
Schoen rolled steel tread	223		

Showing 150% more wearing surface than the Schoen Steel Wheel.

Service Test for One Year.

156 33-inch nickelized chilled car wheels were put under Berwick 100,000 pound coal cars. After 12 months during which one wheel still running, made 29,966, nine wheels only were drawn for defects, showing less than 6% of the wheels drawn. As the railways of the country draw on an average 30% of the car wheels they use every year, only 6% in one year is certainly a very remarkable showing for a first trial of nickelized car wheels.

Service of 88-36 inch Nickelized Chilled Car Wheels.

These wheels were put under locomotive tenders on the Pennsylvania, heavy mountain traffic, at the same time as the above 33 inch wheels.

During the year nine wheels were drawn for "comby from brakes or brake burns," one for worn tread, mileage 21,260. This mileage is believed to be as much as the average rolled or forged steel wheel gives before turning on the same kind of service. No cracks were reported in throat of flange.

It is now admitted among practical railroad men that "brake burns" are not due to any deficiency on the surface of a chilled wheel, but to "natural causes from excessive brake action." There may be "spongy" places in the tread of a steel wheel that would develop into "comby places," but there can be in the nature of the case no soft places in a chilled tread.

Cracks in Throat of Flange.

The only reason the rolled and forged steel wheels, in the face of many undesirable qualities, are supplanting the chilled wheel, is because of their increased tensile strentgh and consequent backing of the flange surface, and the way to improve the chilled car wheel is to follow on the same lines and provide a stronger backing.

The Chemical analysis of the wheels that stood the foregoing mechanical and service tests was ideal.

	Sil.	Sul.	Mang.	Phos.	C. C.	Nickel
Grey Iron.....	.442	.131	.467	.343	.78	.687
Chili Tread....	.441	.110	.483	.342	3.339	.687

Dr. Dudley, the late deceased chemist of the Pennsylvania Railroad, said that he had never before seen in 30 years railway practice, a car wheel mixture as low in silicon as .442. Silicon is only another name for fine sand, and the less sand there is in a car wheel mixture, the greater the strength.

Comparison of Cost.

In comparing the cost of nickelized chilled car wheels with other car wheel mixture, it is necessary to bear in mind two facts which have been demonstrated in the foregoing practical tests, namely:

First. That nickel is valuable in a mixture for car wheels in proportion, within reasonable limits, to the amount of combined carbon present, and that this excess of combined carbon can be readily and cheaply obtained by using scrap chilled car wheels analyzing not less than .68 combined carbon.

Second. That the nickel used in the mixture is indestructible and is present when the nickelized wheel is remelted, thus reducing the cost of the nickel in the second melting 60 per cent.

In making a nickelized steel car axle, the lowest amount necessary to produce the best results has been fixed at 3½ per cent, or 70 lbs. per ton of 2,000 lbs. Owing to the greater amount of combined carbon in a chilled wheel mixture, it is only necessary to use 14 lbs. per ton of 2,000 lbs The present cost of nickel is 38c. a lb. in large quantities. So that $5.32 represents the amount in dollars and cents per ton in a car wheel mixture in the first lot of wheels, but when these are remelted, the new nickel required would only be about $2.25 per ton, or seventy-five cents per wheel.

As compared with titanium, it has the advantage of being indestructible, while the former is a "scavenger" and goes off with the heat. For a good mixture a "scavanger" is necessary. As compared with venadium it softens, instead of hardens in a chill wheel mixture, and besides costing less, it enables the founder to use more scrap wheels.

No Change in Foundry Practice.

The wheels above referred to were all made from cupolas and under regular foundry conditions and annealed once. Twice as many standard wheels were cast at the same time, and no onlooker could have told which were nickelized and which were not. It is our opinion, however, that a stronger nickelized car wheel can be made by casting from an open hearth furnace and by double annealing. The expense would of course be somewhat greater, although no more nickel would be required, and in fact it could be used without previously making an alloy.

When 20,000 car wheels are needed daily, and the steel wheel makers are not able to furnish even 2,000 per day, the improvement of the chilled car wheel in strength seems a great necessity.

Nickel and chrome are the most extensively used of all alloys to improve the quality of steel, and we believe we have found a way to use them to the same advantage in a chilled wheel mixture.

Mileage.

We do not claim any increase in mileage over the best chilled car wheel, which certainly gives the greatest mileage yet produced, and at the least cost per mile, The "Brinnell Test" given above, would warrant us in claiming 10 per cent increase. We claim that the use of nickel would prevent the use of inferior and weak mixtures for making chilled car wheels, and that no matter how good and strong a car wheel mixture is, the use of nickel would increase its strength, and that we are thereby introducing a very important element of safety in railway practice, and in the end increased mileage.

LOCOMOTIVE SPECIFICATIONS.

By L. E. Wiener.

The framing of locomotive builders' specifications is an instance where the lack of standardization has created constant trouble and needless correspondence, because it will be found on examination of any two firms' catalogues that they have altogether different ideas as to what are the leading particulars required by their customers. The writer has, as probably has everyone who requires data not included in the catalogue, experienced the courtesy of builders in supplying extra information, but much trouble and considerable time might be saved if there were more uniformity of specification and the desired information were always available in the first instance. The object of these remarks is to indicate what, in the writer's opinion, after long practical experience, is required to be embodied in all locomotive builders' catalogues.

The first matter on which information is required is the type of locomotive, and next in order the gauge for which it is built, because any type may be adapted to a number of different gauges, and even an illustration will not always indicate whether a particular engine is built for a particular gauge; as, for instance, in the case of the 2 ft. 6 in. metre (3 ft. 3⅜ in.) or 3 ft. 6 in. gauge. These details are fundamentally important, though obvious, because it is natural and desirable that one should begin by saying what is to be described, whether an elephant or a fox-terrier; yet most catalogues leave out the gauge altogether. The type of locomotive should be quoted either in the numerical or nominal system, both of which are now well known.

The date of the engine and the builder's name should also be given, because catalogue sheets are sometimes separated from the book, and if the maker's name is not on every page difficulties may arise. These details are so obvious that they are usually omitted, but this should not be.

As regards dimensions, the first item to quote is the maximum weight per axle. This all-important detail is hardly ever mentioned in a catalogue, and must be guessed roughly, previous to the builder's reply to a question on the subject, which may mean a lapse of several weeks or months. It is quite as important a factor as the gauge of the locomotive, and more so than any other particular to the intending purchaser. After that should come the weight available for adhesion, and the total weight of the engine in working order. Having determined from these particulars whether the track of an existing railway (in reference to the maximum weight per axle) and the bridges (as related to the total moving weight) will bear the engine. the curves of the line will have to be considered in respect to the wheel-base, which should be detailed as total, rigid, and bogie, if any.

The diameters of the wheels, driving or coupled, bogie and others, if any, should follow. The sizes of the carrying wheels are seldom quoted; they are not strictly necessary for any calculation of a locomotive's power or capacity, but they are useful, and might as well be supplied.

Next in importance are the dimensions of the cylinders (diameter and stroke). These are always given, though some makers are apt to consider the diameter as the only important item. Following these should come full particulars of the boiler, the working pressure in pounds per square inch, the mean diameter of the barrel, and the height of the centre above the rails. This latter detail is usually omitted, but should always be given. Then should be specified the number and metal of the tubes, their inside and outside diameters, and their length between the tube plates.

The metal of which the firebox is constructed should be mentioned, as well as its length and width and mean height, and then should follow the heating surface of the firebox and tubes, and the grate area.

The kind of fuel the engine is intended to consume should always be stated, and the tractive power should be stated in pounds, calculated on the basis of 0.65 of the theoretical power exerted.

If there is a tender, particulars should be given of the number of axles, diameter of wheels, wheel-base, and weight empty and full. Both for tender and tank engines the water and fuel capacities should always be quoted.

A point of considerable importance in many cases is a statement of the gauge limitations, or outside dimensions, of the locomotive, such as the extreme height, extreme width, and total length of engine alone and with its tender, if one is required.

The foregoing is not a very formidable list, but on the other hand, none of the particulars quoted should be omitted, as they are almost essential in a number of cases, especially in the instance of engines supplied to lines outside the country. Lastly, it is often useful to give the names of railways already using engines similar to those of which the specifications are given.

Many catalogues are written in several languages. Most of them are simply translated, which is useless unless the English measures are transposed into metrical equivalents. In this connection it should be borne in mind that the usual practice when metrical measurements are given at first hand is to give the heating surface on the inside, whereas in England the practice is to compute from the water side. Heating surface should be completed on the same basis all the world over.

Without recapitulating the foregoing items of specification in detail, the writer recommends as the result of long experience that they should be tabulated practically in the same order as here mentioned, thereby placing the more vital particulars first.—"The Locomotive."

The Grand Trunk Ry. has ordered a part of its recent inquiry for 61,000 tons of rails from the Dominion Iron & Steel Co.

The Oakland Traction Company, Oakland, Cal., has ordered 1,000 tons of rails from the Pennsylvania Steel Company.

The Pan-American of Uruguay has ordered 45,000 tons of 65-lb. rails from the United States Steel Products Company.

The Southern Railway has ordered 27,200 tons of 85-lb. steel rails, which will be used in track betterments. The orders were divided as follows: Tennessee Coal, Iron & Railroad Co., 22,400 tons; Illinois Steel Co., 1,800 tons; Maryland Steel Co., 3,000 tons.

ENGLISH BUILT RAILWAY MOTOR CAR.

An English built railway motor car of comparatively light construction is shown in the illustrations which are reproduced from Engineering (London). The car was built for a two-foot guage but there are many points of advantage about the design which could be applied in the building of standard guage American railway inspection cars. It is stated that the car as described is both economical and quiet running.

The car is arranged to run equally well in either direction, reversible seats being fitted, as shown in the drawing, so that the passengers may always face in the direction of travel. The engine has two cylinders, cast together, of 4-in. bore and 5-in. stroke. It runs normally at a speed of 1,000 revolutions per minute, thereby developing about 14 horsepower. Ignition is by high-tension magneto. Forced lubrication is provided by means of a reciprocating pump within the engine casing. A centrifugal pump secures satisfactory water circulation through the system, which includes radiators placed at either end of the chassis. The radiators are hung on trunnions, and are thus relieved of stresses transmitted from the frame. A reserve supply of water is carried, and is kept automatically in circuit. The engine crank-case is provided with a large inspector-door, and the lower half of the case is removable without disturbing the remainder of the engine, thus enabling internal adjustments to be made without dismantling. All main bearings are white-metal lined, and are of large dimensions and adjustable. The camshaft is driven by spiral gears, ensuring quiet running. The cams are solid with the shaft, the shaft and valve-tappet, rollers, etc., being case-hardened. The valves and valve-tappet gear are interchangeable. The clutch is of the internal cone type, leather faced, with adjustment for the spring load. It is arranged so that when in action the thrusts are balanced.

The gear-box provides two speeds, in either direction, of 13 and 27 miles per hour at normal engine speed. Speeds up to 35 miles per hour can, however, be maintained on the level. The shafts are provided with ball-bearings, and those taking the sliding gears are provided with castellations cut from the solid. The gears are entirely enclosed, and run in grease, a large inspection-door being provided for the gear-box, through which the gears can, if necessary, be removed without taking down the box itself.

The axles are machined forgings of 40-ton tensile strength steel. White-metal bearings are provided, lubrication being by slip-rings which lift the oil from the reservoir at the bottom of the axle-box. The wheels are 24 ins. in diameter, of cast steel. The final drive is by a Renold silent chain.

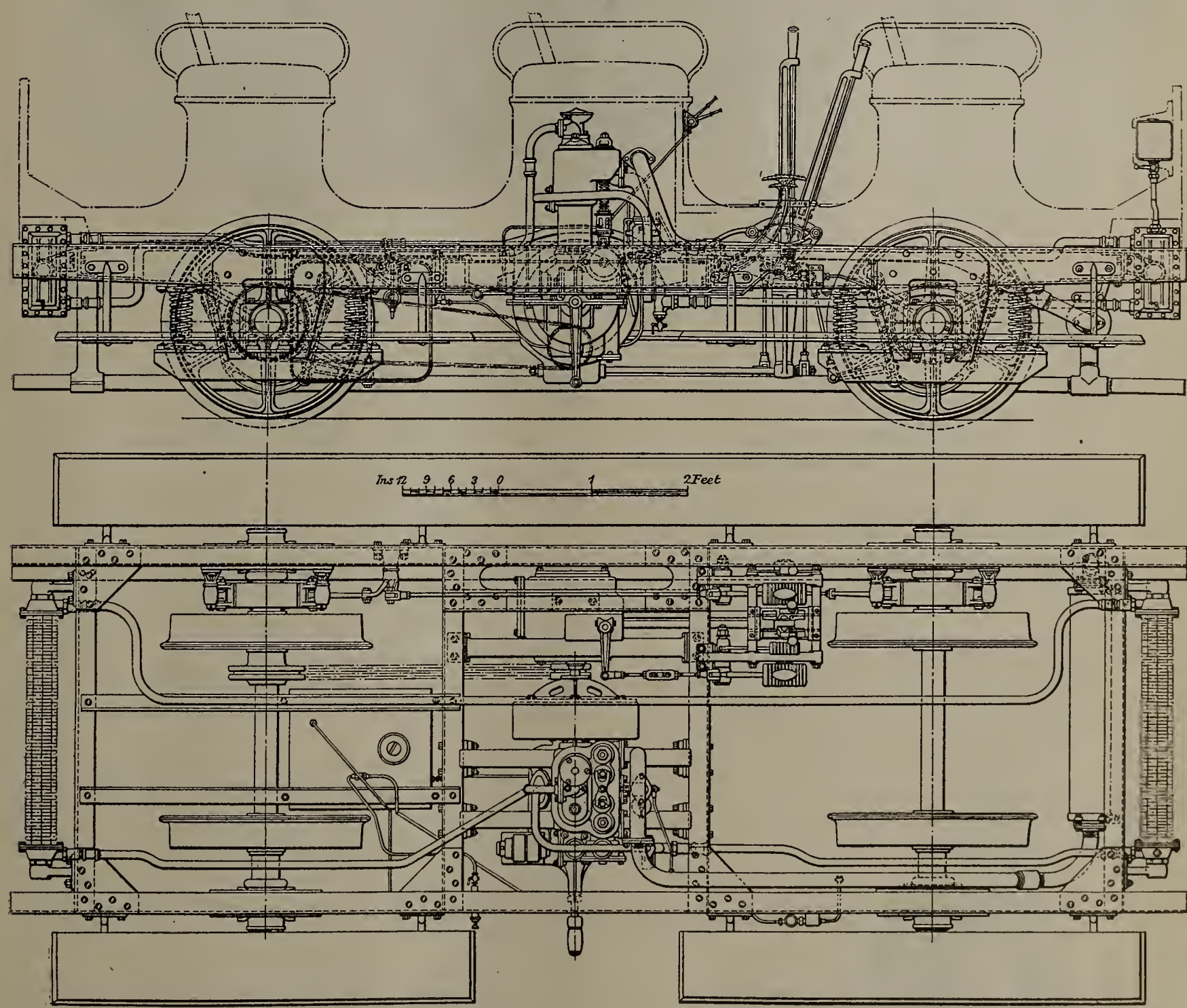

Elevation and Plan of Railway Motor Car.

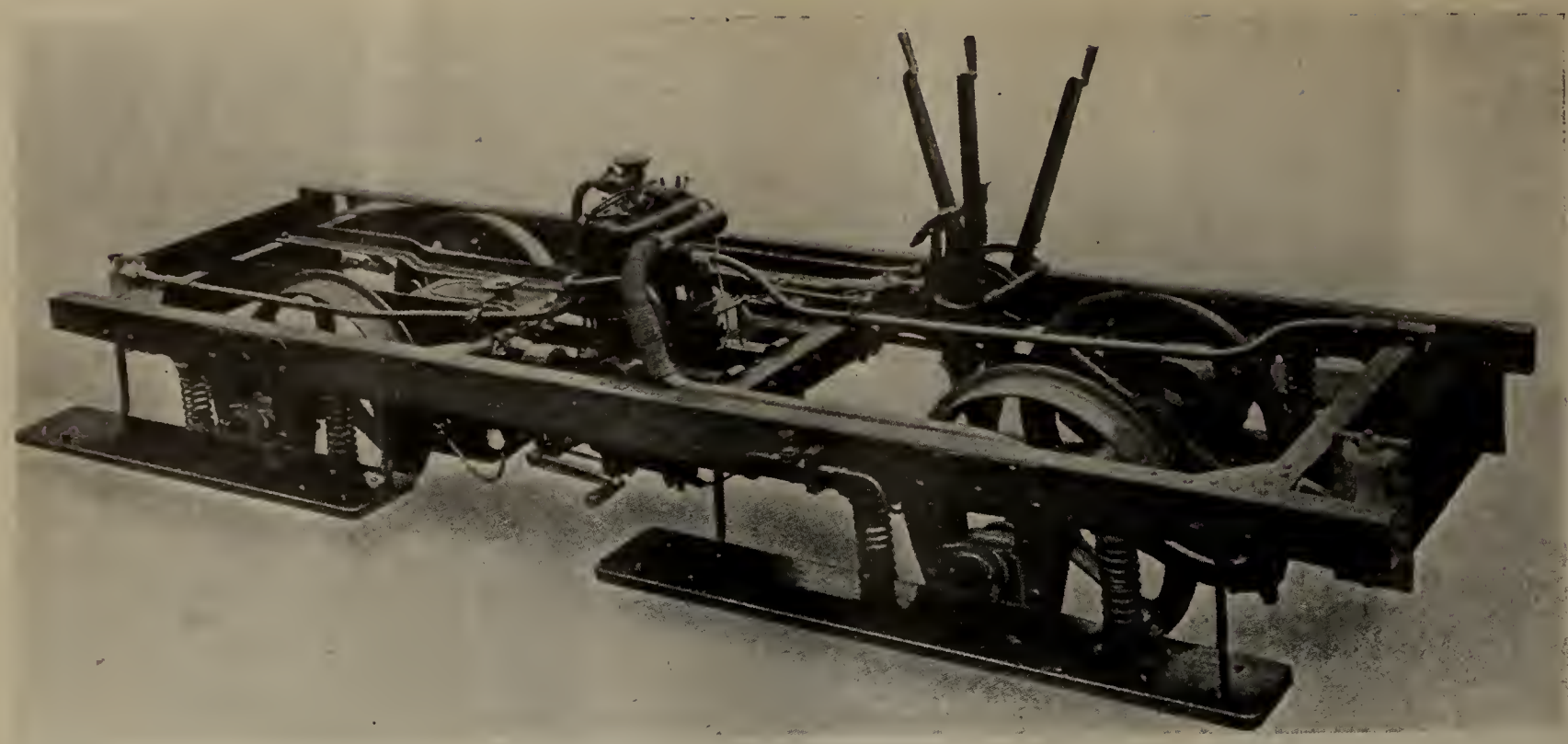

Chassis of Railway Motor Car.

The body is timber, the framing being of ash. The finish is dark blue with gold and black lining. The seats, upholstered in blue leather, are well sprung. A collapsible Capecart hood, which can be closed down on either end to suit the direction of motion, is fitted above the body. Luggage space is provided under the front and rear seats.

The control of the car is as follows: There is one handbrake lever, and one forward and one reverse change-speed lever; of the latter the one not in use is automatically locked in neutral gear. Hand throttle-control is also fitted, as well as an advance lever for the ignition. Three pedals are provided—viz., one brake-pedal, one for the clutch, and one engine accelerator pedal.

The fuel used is petrol, the carburettor being supplied from a tank, pressure-fed from the exhaust. The tank has a capacity sufficient for 300 miles. The exhaust may be discharged rearwards, in whichever direction the car is traveling. The weight of the car in working order is 35 cwt. The center of gravity has been kept as low as possible, consistent with adequate clearance above the rail and ground-levels. The car was built by Chas. Price & Son, Broadheath, near Manchester, England.

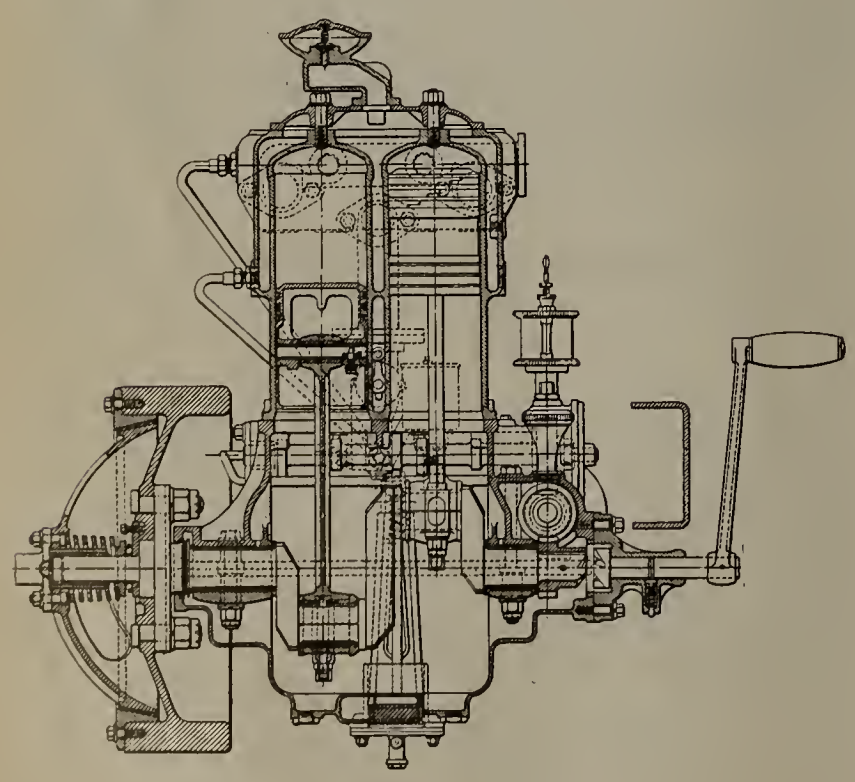

Engine of English Railway Motor Car.

BRITISH LOCOMOTIVE STANDARDIZATION.

By Thomas Reece.

Standardization of locomotives is a question of perennial interest and no broader or more interesting subject can well come up for discussion among railway engineers. It was very fitting, therefore, that the British Institution of Mechanical Engineers—a body for which locomotive men have a very natural preference—should open its program for the winter session with a paper on this topic. There is so much to be said, on the one hand, from the railway man's point of view, and on the other, from the standpoint of the manufacturer, that such a debate could hardly prove unattractive or fail to result in some healthy and stimulating exchange of view. Engines must be kept at work as continuously as possible in order to make the best use of the capital invested. It is not doubted in England that this can best be done if a broad system of standards be adopted. An engine in England earns roughly, say, about $25 net per day. If the inconvenience in repair work on an engine of an odd class keep it idle for only two days more per year than a standard engine, it will earn $50 less than the latter, which, capitalized, gives a permissible difference of first cost for the standard engine of $1,000. On this basis it would be as cheap to pay $1,000 extra in the first instance in order to obtain an engine conforming to railway standards, as it would be to secure a saving of this amount of capital expenditure at the risk of inconvenience later. The matter is more complicated than this, however. Quick delivery is sometimes of paramount importance, and the balances have to be nicely weighed between present convenience and subsequent expense on the one hand, and slightly increased first cost accompanied by reduction of the all-important repair costs and time. This the railway can gauge better than either the manufacturer or the public.

The broader the system of standardization the better, provided it in no way interferes with the economical handling of traffic. At home and abroad generally the principle is made to cover types designed for different classes of traffic on the respective railways. If it can safely be extended so as to embrace different railways, it should prove of still greater advantage, especially under conditions such as obtain in India, with which the paper of Cyril Hitchcock read at the Institution of Mechanical Engineers dealt. Although several standard classes have now been produced for that country, no very decisive opinion as to whether or not the

hoped for results have as yet been thoroughly achieved, appears at present to exist. At the close of 1909 the open mileage of the Indian railways reached a total of 31,490 made up of 16,309 miles of 5 ft. 6 in. gauge, 13,323 miles of metre gauge, 1,443 miles of 2 ft. 6 in gauge, and 415 miles of 2 ft. gauge. The number of engines of these gauges at that time amounted to 4,517, 2,209, 220 and 78 respectively. The three large lines worked by the government at the close of 1909 represented 5,298 miles of the total 5 ft. 6 in. gauge mileage with 1,469 engines, and 1,022 miles of the total metre-gauge mileage, with 199 engines, and inasmuch as the lines worked by companies were also under direct government control, it would be seen that the conditions in India were favorable to the standardization of locomotives.

With the rapid expansion of the railway systems of India during the recent years it became increasingly evident that the multiplicity of locomotive types resulting from the tendency of each railway to evolve types of its own, differing often but slightly from those of neighboring systems, was attended by numerous disadvantages. A remedy should be sought in the direction of standardization which would have the effect of limiting the number of locomotive types and spare parts, of facilitating the transfer of engines and duplicate parts, and of enabling manufacturers to deliver engines in less time and at lower cost than had been customary. With regard to the extent to which standardization could be carried and maintained with advantage in the case of locomotive engines, Mr. Hitchcock said consideration would show that a hard and fast limit could not be defined profitably, but if certain main principles were generally recognized, there was no doubt that much could be done towards the standardization of types, component parts, and materials, which would benefit both railways and manufacturers. Standardization must not be allowed to check progress or to interfere with individual enterprise and invention.

A glance at the British locomotives of today, compared with those of only a few years ago, was sufficient to show the advances that were being made in locomotive design, and to demonstrate the obligation incumbent on all railways to keep abreast of the times. Standardization, as applied to locomotives, must therefore possess an elasticity which would admit of progress and must at the same time be sufficiently strict to prevent unnecessary departures from recognized standards. It could scarcely be expected that alterations which were not of such a character as to constitute substantial departures from accepted standards or to interfere with the interchangeability of parts could be avoided altogether, as experience in actual working under the varied conditions which obtained in different parts of India was certain to suggest the need of improvements from time to time. It would be recognized that unremitting vigilance on the part of railway authorities in India, their consulting engineers at home, and of the manufacturers was necessary to guard agaist unauthorized departures from standards, and also that specifications and designs must be periodically revised, if standardization as applied to locomotives was to be a success. In the interests of standardization, it was necessary that alterations to details should not be made without due consideration of their full effect, as a small alteration might easily result in far-reaching complications. For instance, an additional wash-out plug placed to suit one particular class of engine without reference to other types, might easily be found to be inaccessible in the event of the boiler being interchanged with that of one of the other types, or even seriously to interfere with the change. Again one of the advantages sought in standardization was to obtain rapidity and cheapness of production by repetition work in the workshops, and as proposed modifications might involve alterations to expensive paterns, tools, dies, templates, etc., they should be looked at from this point of view.

The debate upon the paper did not reach a high level, but some points of interest were developed. S. B. Tritton, representing the consulting engineers, who was the first speaker, complained of the difficulty of designing engines for people thousands of miles away. The designs of the standardization committee for the first lot of engines reached India at a somewhat adverse period, when a great demand for engines had suddenly arisen, with the result that large numbers of the engines were sent out before there had been any opportunity of trying them on the road or rectifying small matters in which experience might suggest improvement. On the whole they had come out very well. E. Greg said the maker wanted to feel that standards were sufficiently permanent to enable him to put parts into stock in slack times with perfect confidence, and use them on the next lot of engines ordered. With every order from India there had been some suggestion for slight modification of details, which, while leaving unaffected the type and appearance of the engine, prevented the maker from going ahead with the parts which could be put in stock in slack times. So far as the speaker could recollect, the subject first arose about the year 1902, when orders had been placed in Germany owing to the capacity of the builders here being overtaxed at the time. Some of the builders had suggested that if the engines for India could be standardized, the parts could be made and stocked in slack times ready for the rush, and there would be no necessity to place orders abroad. That was, he believed, the origin of the standardization committee. It was, however, difficult to guard against suggestions from up-to-date locomotive superintendents. Every indent for a fresh lot of locomotives, even of standard make, must necessarily be subject to certain variations.

W. A. Stanier, who spoke next, said that the Great Western Railway Company had for some time endeavored to standardize their new types of engines. They had built six classes of boilers for certain types of engines. Their No. 1 boiler, for instance, would suit engines of the 4-4-2, the 4-6-0, and 2-8-0 types. The No. 2 boiler would suit a number of different classes of 4-4-0 types, and the same applied to the No. 4 boiler. The motion had been developed on standard lines in the same way. The same pattern of two-cylinder (outside cylinders) type could be used for any of the 18-in. by 30-in. cylinders used on the Great Western Railway engines with slight modification of the saddle. The crank-pin bushes were interchangeable in the sense that they could rely upon the spare bushes fitting the rods without the need of fitting. It was difficult to keep spare parts of even standard type, if subject to wear, unless they were kept in a range of sizes. The Great Western Railway practice with regard to metallic packings was to keep these to suit rods varying by 1/32 inch, so that when wear of the rods occured the next (smaller) sized packing could be fitted into the engine.

It was the same with other parts; the wear had to be allowed for. Springs, although made in the same shop, varied—by half-hundredweights, possibly—in the load that they would carry with the same camber. When springs were changed in the running shed, they were usually set by measurement; that sometimes had the effect of upsetting the riding of the engine. Had they in India had any means of testing the weight on the wheels after changing springs? Here springs had to be changed at running sheds without it being possible to test the load on them, and difficulty was sometimes experienced. Portable weighing machines had been tried, but he remembered testing a set some seven or eight years ago which showed results varying anywhere between 2 hundredweight and 3 hundredweight. It seemed that portable machines required foundations just as level and as solid as those for a weighbridge, and he therefore did not consider the portable weighing-machine was of much use.

The author of the Indian paper had referred to the case-hardening of the iron in motion details. In India he would think, judging from English practice, that there would be trouble with the sand. Case-hardened details usually gave trouble when grit got into them. The practice now with some railways—the Great Western among them—was to bush the motion with phosphor-bronze bushes, and face the jaws of the links with phosphor-bronze washers. The Great Western Company got good results from this practice, and spare bushes could be kept at the running sheds if there were any appreciable wear. George Hughes said that he had been struck by the fact that the paper dealt with the standardization of engines in a country 40 times the size of England. The proposition thus became almost impracticable. Quite early in the paper, the other had urged on behalf of standardization that three of the great railways in India were not only owned by the state, but were worked by it, while several of the other railways were state owned, but leased to companies, although controlled by the state. This was put forward as a reason for standardization. In addition, for military reasons, the conditions in India were said to be very favorable.

CARE AND MAINTENANCE OF MACHINE TOOLS IN A LARGE PLANT.*

By C. K. Lassiter.

The American Locomotive Co. in its various plants have about 9,000 machines. It is evident that the maintenance of this equipment requires a considerable organization, if the equipment is to constantly be up to its highest standard of efficiency. A few years ago such an organization was formed for the purpose of increasing the production of the plant with the least possible cost of the maintenance of the machinery. At that time a great number of machines of obsolete and complicated design were in use in the plant, operated, for the most part, by inexperienced workmen. The growing use of high-speed steel in machines not especially designed for the heavy strains thus imposed, also made the cost of maintenance of these machines very high.

The first step taken was to create an organization dividing and report on all conditions which might tend to cause failures in the operations of machines: he also investigates and reports on all conditions which might cause accidents to employes, on abuses of equipment by the operators, and on equipment which is not kept clean and in order by the operators. The equipment covered by these reports includes machine tools, power equipment, pipes, sewers, buildings and with the conditions of the equipment in all the various plants. structures, rolling stock, cranes, elevators, etc. By means of this organization it is possible to keep constantly in touch the work of maintenance into different departments. In charge of the whole organization is placed the mechanical superintendent, and under him a general engineer of maintenance who, in turn, at each plant has a local engineer of maintenance whose duty it is to look after all equipment such as machinery, buildings, grounds, tracks and rolling stock. The power plant is looked after in a similar manner, there being a general engineer of power with a local engineer of power at each plant, his duties being to look after such matters as power production, purchase and distribution of power, heat, light and water. fire protection, watchmen, etc. In addition there is a general small-tool supervisor with a local supervisor at each plant, whose duties are to look after all matters pertaining to the local tool-room, such as taps, reamers, twist drills, milling cutters, tool steel, and the like.

In addition to the officials mentioned there is at each plant an inspector of equipment, whose duties are to investigate

A small printed form is used on which every machine tool failure is reported, showing the time when the machine failed, the cause of the failure and the estimated cost of repair. When the repair has been completed, the actual cost of repair and the length of time the machine has been out of service due to the failure are also reported. These reports are kept for each individual machine, so that there is a perpetual record of the performance of every machine in the plant. The failures are also classified under four heads, as: failures due to negligence, to improper design, to accident, and to ordinary wear. Each of these failures is systematically investigated. Those due to negligence are taken up with the men in charge of the operators with a view to having the machines better cared for. The failures due to accident are investigated, and, if possible, steps taken to reduce the number to the minimum. When failures are due to improper design, the weak parts are redesigned and strengthened. As regards the failures due to ordinary wear. investigations are continually being made to see if it is not possible to simplify the construction of the machines and reduce the number of parts required to the minimum.

The system outlined was installed in 1907. The results obtained have been very satisfactory. The cost of maintenance has constantly decreased since the installation of the

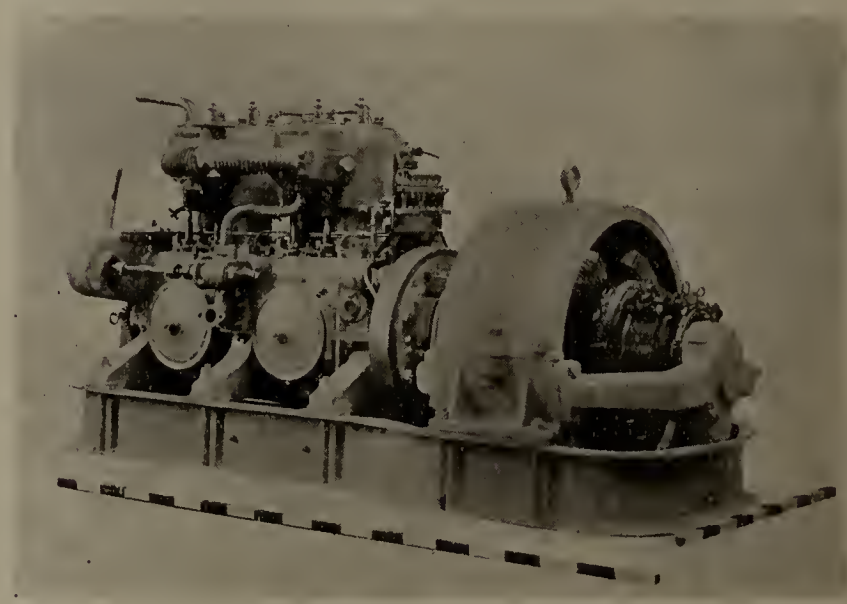

Generating Set of German Motor Car.

system. The present cost of maintenance is about one-third of the cost at the time when this system was instituted. The saving effected in all the plants of the American Locomotive Co. amounts to thousands of dollars a month. At the same time, the number of productive machine-hours that are lost due to failures has been reduced from 12 per cent to 1.75 per cent. To illustrate just what this means, it may be well to mention that out of the 9,000 machines in all the plants, about 1,000 went out of service all the time on account of repairs when this system was begun, while at the present time this figure stands at an average of 100 machines only. It is interesting to note how these results were effected in one of the shops. By referring to the reports it was found that about 40 per cent of the failures were due to negligence. It has since been possible to reduce this negligence factor to 1.25 per cent.

In another case it was found that a certain type of machine tool was purchased having an error in its design which had existed for ten years on this make of machine and which was costing the American Locomotive Co. something like $5,000 a year. This matter was taken up with the machine tool builder and the design changed, eliminating this entire charge of repairs. It was found that the maintenance of some types of machines was so heavy that it was concluded a waste to

*From a paper read before the National Machine Tool Builders' Association convention.

keep them in service, and they were replaced with modern tools.

The system has also made it possible to determine definitely what is the most economical design of the machines used, from the user's standpoint. Most of the machine tools now purchased by the company are built to specifications prepared by its own engineers, and the aim is to cut out every gear and moving part not actually needed for the work. Planers, for example, are made with only one speed, because the works are so extensive that one planer can be put on one class of work and never changed. On vertical milling machines but one pair of gears is used between the motor and cutting tool, and on large vertical boring mills the gear boxes have been cut out and the drive is equipped with a big plain pulley, the power being obtained from a variable speed motor placed in the ceiling where the countershaft was formerly located. On radial drills the speed of the driving shafts has been lowered and the diameter of the shafts increased, so as to reduce the cost of maintenance of the bearings.

The question of the economic use of power in operating machine tools has been investigated in this connection. In testing out some of the machines it was found that there was a considerable amount of power absorbed through the friction of unnecessary gears. This is one of the reasons why an attempt has been made to cut out every gear possible on all new machines purchased. The result of this policy is that on a new design of radial drill where all except one pair of gears are done away with, the frictional load of the machine when running idle at the rate of about 160 revolutions per minute is only 0.7 H. P., while the same machine running at approximately the same speed drilling a 1¼ inch hole with a cutting speed of 50 feet per minute and a feed of 0.022 inch will use 5 H. P. In another case, a machine running at about 335 revolutions per minute will use 1 H. P. when running idle, while it requires 8 H. P. when drilling a 1 inch hole at a cutting speed of 85 feet per minute and a feed of 0.022 inch. Hence the percentage of power used for the machine when running idle is small.

GERMAN RAILWAY GAS ELECTRIC CAR.

By Frank C. Perkins.

A German gasoline electric motor car is utilized by the Ostdeutsche Eisenbahn Gesellschaft. Its electric equipment is of 60 horse power capacity and the electrical generator and gasoline engine set, together with the electric motors and controllers were constructed by the Societe Anonyme Westinghouse of Le Harve, France. These cars operate at a speed of 22 miles per hour and carry 70 passengers and 10 tons of freight or express on a trailer. Sufficient fuel is carried for operating the car a distance of 155 miles and, the total amount of gasoline used during such a trip at the normal speed is about 330 pounds. The four cylinder vertical engine has a stroke of 6.3 inches, the cylinders measuring 5½ inches in diameter. The engine may be operated on oil or alcohol as desired and is said to work with good efficiency on either fuel. A high tension magneto is utilized for ignition and a regulator is provided on the carburetor controlling the mixture of air and gas as it enters the engine, so as to hold the speed constant regardless of the variation in load on the electric generator.

As noted in the illustration the electric generator is of the four pole direct current type and is direct connected to the engine by means of a flexible coupling, both engine and generator being mounted on the same base.

German Gas Electric Motor Car.

The engine and generator set is mounted in the cab at one end of the car as shown in the illustration and the controller, which regulates the current to the motors on the car trucks, is located in the engine room in a similar position to that of the ordinary electric motor car.

The railway line of the Ostdeutsche Eisenbahn Gesellschaft has a gauge of one meter (3.3 feet), a total length of 34 miles and a maximum grade of 16.7%. Each train consists of a gasoline electric motor car of the type shown and two trailers. Each motor car is equipped with two direct current railway motors of the Westinghouse type, with a capacity of 30 horse power each. On the Chemins de fer d' Arad-Csanad, in Hungary, there is in operation a French

gasoline electric motor car of this type of 100 horse power capacity. It hauls trains of four trailers on the above mentioned railway, the power generating equipment consisting of a six cylinder gasoline engine direct connected to a four pole direct current generator. Its introduction for service between Arad and Csanad has met with great success. The total length of this line is 286 miles and the trains carry about 87 passengers and 6.1 tons of freight or express. The motor car weighs 16.7 tons and is equipped with two direct current single induction motors of 40 horse power each. The slow trains operate from 19 to 22 miles per hour, the motor cars hauling four or more trailers at this speed.

The express trains weigh 28.7 tons hauling two trailers of 6.5 tons and 6.1 ton respectively and operate at a speed of from 34 to 37 miles per hour, the motors developing about 100 horse power with the trains operating at this speed. These French gasoline electric motor cars are divided into two compartments for first and second class passengers and it is stated that 24 trains per day are operated on this line. The Compagnie d'Arad Csanad has 41 gasoline motor cars in service traveling 830,000 miles per year and it is maintained that the cost of operation is very much lower than could be accomplished with steam or electric trolley service.

RECENT COURT DECISIONS.

The Supreme Court of the United States has sustained the law of Arkansas, regulating the number of men to be employed on freight trains. The suit was that of the Chicago, Rock Island & Pacific against the state, the supreme court of Arkansas having sustained the law.

The law requires an engineman, a fireman, a conductor and three brakeman on every freight train of 25 cars or more, "regardless of any modern equipment." Railways not over 50 miles long are excepted; penalty $100 to $500 for each violation, but the penalties are not to apply during strikes of trainmen. The train with which the offense was committed was equipped with both air brakes and automatic couplers and it had two brakemen; and the company declared that the requirement of a third man was unnecessary, and therefore a taking of its property without due process of law.

The decision, by Justice Harlan, says that the principle sustaining this law has been fully settled by former decisions, but quotations are given from a few of these earlier decisions. In the case of the Alabama law requiring locomotive enginemen to have licenses, Justice Matthews laid down the dictum that legislation might affect commerce without constituting a regulation of it. The Alabama license requirement only indirectly, incidentally and remotely affects interstate commerce, although the engineman in the case tried ran regularly to and from a point in Mississippi. The Alabama color blind law was decided in the same way. The law was not directed against commerce and affected it only incidentally.

The New York law, forbidding fires in passenger cars, was assailed by the New York, New Haven & Hartford as repugnant to the constitution, but the court held that it was for the protection of all persons traveling in the state of New York; and interstate passengers are entitled to as full protection as others. There may be a doubt as to the wisdom of such regulations, but that is a matter for the state to determine. Even if interstate trains were delayed and passengers inconvenienced, such inconvenience cannot be avoided so long as the individual states are sovereign. This law, like the Arkansas Full Crew law. does not apply to short railways, but this exception was justified by the court on the ground that the law-makers had undoubtedly deemed it more important to protect heavy through trains. The contention that the statute denied the plaintiff the equal protection of the laws, was therefore rejected.

Justice Harlan holds that in Arkansas passengers on interstate trains are as fully entitled to the benefits of local laws as are citizens of the state. The state has never surrendered its power of caring for the public safety, and the validity of such statutes is not to be questioned in a federal court unless they are clearly inconsistent with some power granted to the general government, or with some right secured by the federal constitution, or unless they are purely arbitrary in their nature. The Full Crew law was enacted in aid, not in obstruction of interstate commerce. There is room for controversy as to the wisdom of the law, but it is not so unreasonable as to justify the court in condemning it because of its arbitrariness. It is a means employed by the state to accomplish an object which it is entitled to accomplish, and such means, even if deemed unwise, are not to be condemned if they have a real relation to that object. Undoubtedly Congress in its discretion may take entire charge of the whole subject of the equipment of interstate cars and establish such regulations as are necessary and proper for the protection of those engaged in interstate commerce; but it has not taken action in regard to train crews, and until it does, the statutes of the state, if not arbitrary, and if they really relate to the rights and duties of all within the jurisdiction, must control.

New Books

THE SCIENTIFIC AMERICAN CYCLOPEDIA OF FORMULAS. By Albert J. Hopkins; 1,077 pages, cloth, 6x8½; published by Munn & Co., New York City. Price, $5.00.

This is a wonderfully useful work, as Mr. Hopkins' admirers among the readers of the SCIENTIFIC AMERICAN will readily testify. As "Query Editor" of the above mentioned publication the author has made a reputation. This book, which is practically new, has called for the work of a corps of specialists for more than two years. Over 15,000 of the most useful formulas and processes, carefully selected from a collection of nearly 150,000, are contained in this most valuable volume, nearly every branch of the useful arts being represented. The formulas are classified and arranged into chapters containing related subjects, while a complete index, made by professional librarians, renders it easy to find any formula desired. An entirely new departure in a book dealing with receipts, is the chapter on Chemical, Pharmaceutical and Technical Manipulation, which has been prepared with the aid of well-known chemists. The information contained in this chapter is entirely practical and a careful study of it will go far in saving the expenditure of both money and time. There is also a list of prices of odd, out-of-ordinary technical products, which is a very valuable feature and is also unique. Many usful tables are also included. This book will prove of value to those engaged in any branch of industry and contains hundreds of the most excellent suggestions for the many thousands who are seeking for salable articles which they can manufacture themselves on a small scale for a livelihood.

* * *

MOTION STUDY. By Frank B. Gilbreth; 116 pages, cloth, 5¼x7¾; published by the D. Van Nostrand Co., New York City. Price, $2.00.

This book is more of a thought producer than reference to the active engineer or industrial worker. As its title implies it is a study of motion and is meant to convey hints on the reduction of the waste of energy, and therefore of the cost of production of all industrial operations. Many examples are detailed and illustrated. The favorite subject of the author is bricklaying. He shows how, by means of "non-bending" scaffolds and by proper arrangement of material, the bricklayer's output is greatly increased at a

reduced expenditure of energy. As may be imagined the author finds numberless applications for his ideas. The text has appeared as a series of articles in INDUSTRIAL ENGINEERING, where they attracted a great deal of attention.

* * *

RAILROAD TRAFFIC AND RATES. By Emory R. Johnson and Grover G. Huebner; two volumes, 524 and 448 pages, cloth, 5½x8¼; published by D. Appleton & Company, New York. Price $5.00.

This book appears to the reviewer to be a perfect gold mine of information on the subject implied by the title. Nothing like it in thoroughness and conciseness has heretofore been placed at the disposal of the student of railway problems. It has been written mainly to meet the demand of men in the railway service for complete and authentic information regarding traffic services and rate systems. It is not an attack upon railroads, nor a defense of them. It is an exhaustive account of the intricate and detailed work connected with railroad traffic and rate making. The volumes are written by university professors with the assistance of practical railway men. The business of the traffic department of railroads is covered in minute detail, and there are also several chapters upon the traffic problems with which the operating department is concerned—terminal handling of traffic, the work of the station agent, car service, time freight, etc. Officials and employees of the comptroller's and auditor's offices will be specially interested in the elaborate explanations of the shipping papers and tickets used and the methods of accounting of freight and passenger traffic. The subject of rate making is gone into with absolute thoroughness, and the book contains a large amount of valuable material to be found in no other volume. For example, one hundred and fifty pages are devoted to a description of the actual systems of rate making. This highly important information has not been available heretofore in print. More than sixty pages are given over to a discussion of the express services and tariffs. A full account of the Pullman Company, which has never been written up heretofore, is given in a lengthy chapter. There are three chapters upon the transportation of the mails and the payments therefor. The book is written in a concise, clear style. It is a manual that will be of daily assistance to railway officials, traffic men, government officers, university students, and everyone interested in railroad matters.

A. C. Adams has been appointed superintendent of motive power of the Spokane, Portland, & Seattle, with office at Portland, Ore.

J. W. Marden, superintendent of the car department of the Boston & Maine, at Boston, Mass., has resigned, and that position has been abolished. E. T. Millar, general foreman of the car department, at Concord, N. H., has been appointed general car inspector, with office at Boston, Mass, succeeding F S. Sanborn, assigned to other duties.

O. S. Jackson, master mechanic of the Chicago, Indianapolis & Louisville at Lafayette, Ind., has been appointed superintendent of motive power of the Chicago, Terre Haute & Southeastern, with office at Terre Haute, Ind.

Mr. F. O. Walsh has resigned as master mechanic of the Atlanta & West Point and Western Railway of Alabama, to accept service with the Brazil Railroad Co., in the capacity of mechanical assistant to the general manager. He is to be in full charge of the mechanical department of the road, with office at Sao Paulo, Brazil. Mr. Walsh is not the first American to go with this Brazilian road. He has been preceded by Mr John M. Egan, and more recently by two of the division superintendents of the Central of Georgia, Messrs. H. D. Pollard and H. B. Crawford. Mr. Walsh has been master mechanic of the Atlanta & West Point since 1899. He received his early railroad training in the mechanical department of the Louisville & Nashville. He sailed with his family from New York on February 18.

J. W. Marden.

F. O. Walsh.

G. S. Hunter.

G. S. Hunter has been appointed a master mechanic of the Missouri, Oklahoma & Gulf, with office at Muskogee, Okla., succeeding E. Gilroy, resigned.

C. A. Roth, storekeeper of the Chicago, Burlington & Quincy at Galesburg, Ill., has been appointed a storekeeper at Havelock, Neb. J. L. Feemster, storekeeper at St. Joseph, Mo., succeeds Mr. Roth at Galesburg, and J. A. Allen, general foreman at Aurora, Ill., succeeds Mr. Feemster. J. E. Matthews, chief lumber inspector at Chicago, has been appointed Pacific coast lumber agent, with office at Seattle, Wash., and J. F. Rothschild, storekeeper at Hannibal, Mo., succeeds Mr. Rothschild.

R. G. Lowry has been appointed general storekeeper of the Kansas City Southern, with office at Pittsburg, Kan., succeeding C. V Twyman, resigned.

V. W. Ellet has been appointed a general foreman of the

Rock Island Lines, with office at Rock Island, Ill., succeeding J. E. Loy, assigned to other duties.

John H. Guess, formerly general purchasing agent of the National Railways of Mexico, has been appointed assistant general purchasing agent of the Grand Trunk, with office at Montreal, Que.

M. Weber has been appointed master mechanic of the Albuquerque division of the Atchison, Topeka & Santa Fe Coast Lines, with office at Winslow, Ariz., succeeding William Daze, assigned to other duties.

Willard Doud, shop engineer of the Chicago, Burlington & Quincy at Lincoln, Neb., has been appointed shop engineer of the Illinois Central, with office at Chicago. He will give particular attention to planning improvements in power plants and other features of the shops which come especially under the mechanical department.

J. B. Emery has been appointed master mechanic of the Texarkana & Fort Smith, with office at Texarkana, Tex., succeeding E. Gilroy, resigned.

T. M. Price, assistant master mechanic of the Detroit, Toledo & Ironton at Jackson, Ohio, has been appointed general foreman, with office at Jackson, succeeding H. F. Martyre, resigned.

C. W. Dieman has been appointed master mechanic of the Green Bay & Western, the Kewaunee, Green Bay & Western, the Ahnapee & Western and the Iola & Northern, with office at Green Bay, Wis., succeeding W. P. Raidler, resigned to engage in other business.

G. L. Lambeth master mechanic of the St. Louis division of the Mobile & Ohio, at Jackson, Tenn, has been appointed master mechanic of the Mobile division, with office at Whistler, Ala, succeeding E. G. Brooks, assigned to other duties. W. Q. Daugherty succeeds Mr. Lambeth.

E. A. Sollitt, road foreman of engines of the Wabash at Montpelier, Ohio, has been appointed trainmaster, with office at Moberly, Mo., succeeding J. W. Jones, promoted.

W. L. Cooke has been appointed a division storekeeper of the Mobile & Ohio, with office at Murphysboro, Ill. He succeeds D. L. Ralch, who has been transferred.

Among The Manufacturers

SPECIAL VERTICAL MILLING MACHINE.

A double vertical milling machine as illustrated herewith was designed by the Newton Machine Tool Works, Philadelphia, Pa., especially for the McClintic-Marshall Construction Co., to be used in milling the faces on the gates for the Panama Canal and arranged to cover the largest sizes of structural work.

The spindle of the machine is 6⅝ in. in diameter, fitted with a No. 7 Morse taper and revolves in bronze bushed capped bearings. It is driven by a steep lead worm and a worm wheel having a bronze ring, the driving worm is of hardened steel fitted with roller thrust bearing. Both the bearing for the driving worm wheel and worm are cast solid with the saddle. The outboard bearing is adjustable sidewise and is fitted with a taper bushing, having a parallel internal and taper external bearing with adjusting nuts to compensate for wear. The spindle saddle has square lock gibbed bearings on the upright of the special "Newton" construction, which has the saddle adjustments for alignment on one sheer of the face of the frame, which over-comes the tendency to distort the bearing surfaces under the old practice of having the bearings on the outside of each sheer. The saddle is counter-weighted, has reversing fast power vertical adjustment by means of a revolving nut fitted to a stationary screw, which has a top and bottom bearing to permit of its always being maintained in tension. The construction permits of having only one feed at a time, but sufficient change gears are furnished to give feeds of .3214 in., .2071 in., .285 in., .0892 in., .0554 in. and .0357 in. per revolution of spindle. The feed motion is clutch and the drive is taken from the spur gear mounted beside the driving worm wheel.

Newton Special Milling Device.

The machine has a minimum capacity for cutters 25¼ in. in length and for cutters to a maximum length of 39¼ in. and up to 13 in. in diameter. The minimum distance from the work support to the centre of the spindle is 10½ in. and the maximum distance is 8 ft. 4½ in. Reverse motion to the fast vertical elevation of the saddle is obtained through a double train of bevel gears engaged by a Carlyle-Johnson friction clutch.

Each machine is driven by a 20 h.p. General Electric type DLC No. 2 motor, having a speed of 450 to 1,350 rpm. The motion is transmitted from the motor through a quride gear to the large driving spur gear mounted on the horizontal shaft on the side of the upright on which is also mounted a bevel gear driving the vertical spline shaft. The bevel gear on the vertical spline shaft is mounted above the bevel pinion. The stresses are thus counteracted and the thrust on the vertical spline shaft bearing is minimized. The base for supporting the work is clamped to and is adjusted with the upright. Each upright has 12 in. of hand adjustment on the base and the base is made in three sections with the intention of mounting one upright on each end section of the bed for exceptionally long work, of course, first separating the sections. This machine is manufactured in smaller sizes for the ordinary requirements of brace milling.

SOLID ADJUSTABLE DIE HEADS.

The Landis Machine Co., Waynesboro, Pa., has recently brought out a new type of die head known as a "Solid Adjustable Die Head." The purpose of this die head is to take the place of the solid dies now used on any of the screw machines and other types of machines where the work is

backed out of the die after the thread is cut. The die head is illustrated herewith showing the 1-in. standard size which has a range from ¼ in. to 1 in. It embodies the use of the long life, high speed free cutting Landis die, with a very wide adjustment.

The dies are adjusted to and from the center on radial lines for different sizes and are held rigidly in their seats. The die head is held in the turret of any ordinary screw machine and trips off by retarding the forward movement of the carriage. This die head will also be made without the tripping device for special requirements. The tripping arrangement is so arranged that when the desired length of thread is cut, the die head will trip and revolve with the work until the machine has time to reverse. By using this die very high cutting speeds are readily acquired, equal to the turning and drilling speeds on the other operations of the screw machine, so that the speeds need not be reduced in the threading operation for the accommodation of the die as is the case with the solid dies.

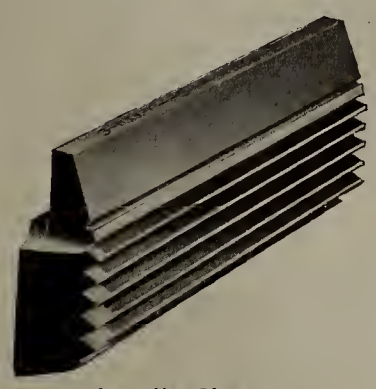

Landis Chaser.

Chasers can at all times be ground to suit the material to be cut; any amount of rake can be given that is necessary, thereby insuring the best possible cutting condition and securing ideal results. The dies are made from high speed steel and can be ground and reground many times, thus giving a life greater than other types of solid dies, besides never requiring to be annealed, hobbed or retempered.

One set of chasers can readily be set above or below their rated diameter. For instance, ½ in. (13 thread) can be set to cut 1 in. diameter when desired, or they can also be set to cut ¼ in. diameter. The angle in the thread, however, will not be quite ideal, but all that is required for ordinary screw machine work. With other types of die heads a special set of chasers is required each time you wish to cut other than standard pitches. With this head any diameter within the range of the head can be cut with one set of dies so long as the pitch is the same. In very special cases where absolutely correct pitch is required, it would be advisable to use special holders so as to set the chasers on the exact angle to correspond with the angle of the thread. Ordinarily this is not required.

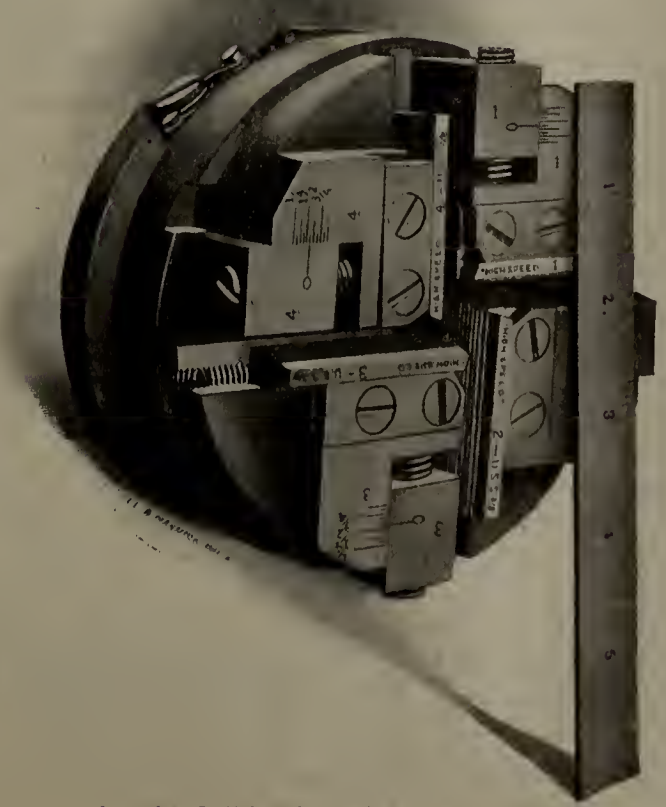

Landis Solid Adjustable Die Head.

These heads can be supplied in standard sizes with shanks suitable for holders in ordinary screw machines. The ½ in. head is 2¾ ins. in diameter, capable of cutting a thread of 1½ ins. long. The 1 in. head is 4⅝ ins. in diameter, capable of cutting a thread 2½ ins. long. Other sizes with special shanks will be made to order.

The special advantages with this type of head are that the head will admit of very much increased cutting speeds over others. Any one chaser of a set can be adjusted independently of the others if necessary, and each grinding of the dies gives all the qualities of a new die. Any chaser of a set can be replaced without replacing the complete set.

New Literature

The Browning Engineering Co., of Cleveland, has issued a neat booklet containing many fine half-tone views of Browning pile drivers.

Allis-Chalmers Co., of Milwaukee Wis., has issued a reprint of bulletin 1510 which deals with direct connected Reynolds Corliss engines.

The Rockwell lathe and the Rockwell drill press are described in bulletins 52B and 54 of Jos. F. Ryerson & Son of Chicago.

"Railway Equipment Primer" is the title of booklet issued by the Chicago Railway Equipment Co., of Chicago, in which the advantage of using the Creco brake beam is set forth after the manner of our old "first readers."

Stock list number 6 of the Waverly Warehouses, Newark, N. J., has been issued by the Carnegie Steel Co. It gives code words and dimensions for channels, angles and other steel forms.

A catalogue of Alco acetylene burners and tips has been published by the American Lava Company, of Chattanooga, Tenn. A very comprehensive line is shown.

The U. S. Light & Heating Co., of New York, has issued a bulletin describing "National" storage batteries for stationary service. A bulletin has also been issued on the installation and operation of these batteries.

The Steel City Electric Co., has issued a leaflet description price list of "Steel City" outlet boxes.

Industrial Notes

The Hayes Track Appliance Co., Geneva, N. Y., has bought ground at Richmond, Ind., for construction of a new factory. The Geneva plant will be abandoned on April 1st when it is hoped the new plant will be ready for occupancy. This company has recently executed a standardization agreement with the Harriman Lines covering its derails. This was made when those lines already had over 3,000 of these derails in track, bought during the years 1904 to 1910 inclusive.

The Sixty-third meeting of the American Society of Mechanical Engineers will be held in Pittsburg, Pa., from May

30th to June 2nd, inclusive. The Society has not met in this city since 1884. An executive committee consisting of E. M. Herr, chairman, George Mesta, J. M. Tate, Jr., Chester B. Albree, D. F. Crawford, Morris Knowles, and Elmer K. Hiles, secretary, will have charge of the Pittsburg meetings. It is expected that from 300 to 400 members and ladies will be in attendance. There will be professional sessions when papers will be read and discussed. There will also be inspection trips through the leading local industrial establishments. besides automobile trips through the parks, a visit to Carnegie Institute Memorial Hall, etc.

The F. W. Miller Heating Co: advises that it has moved into new quarters in the McCormick Bldg., Chicago.

Frank S. Layng, a director and formerly a vice-president of the Railway Steel-Spring Company, New York, died on February 11.

At the railway exposition which has just closed at Buenos Aires, Argentine Republic, The Buda Company of Chicago, Ill., was awarded the gold metal on its line of motor cars, motor velocipedes, hand propelled velocipedes, hand cars, track jacks, rail benders, car replacers, New Style Paulus Track Drill and Wilson bonding drill.

The Union Steel Castings Company, Pittsburg, Pa., has bought some ground adjoining its present property and intends to build a new plant as soon as possible.

Frank J. Walsh, general foreman of the Chesapeake & Ohio at Thurmond, W. Va., has resigned that position and is now with the Chicago Pneumatic Tool Company, Chicago.

The Northern Indiana Gas & Electric Co., of Chesterton, Ill., has ordered two 3,750-Kva. steam turbines from the Westinghouse Machine Co. The turbines will operate on a steam pressure of 175 pounds (100 deg. superheat) and will exhaust into a vacuum of 28 ins. The turbines will be connected to 750 Kva., 13,200 volt, 3-phase, 60-cycle Westinghouse generators.

The Bradford Electric Light & Power Company of Bradford, Pa., has ordered a 17 by 26 in. 375-h.p. horizontal gas engine from the Westinghouse Machine Co. The engine will operate on natural gas with a calorific value of 1,000 b.t.u. The engine will be connected to a Westinghouse 250-Kva., 2,400-volt, 60 cycle, 3-phase generator.

The Allis-Chalmers Company, Milwaukee, Wis., announces the appointment of F. C. Bryan as general traffic manager, with office at Milwaukee.

L. F. Hussey, manager of publicity for the Wells Brothers Company, Greenfield, Mass., has resigned, effective February 25, to become advertising manager of the Standard Tool Company, Cleveland, Ohio. Mr. Hussey has had considerable practical experience in the manufacture of machinery and tools, and also had charge of the commercial department of a high school at Mechanicsville, N. Y.

The Pressed Steel Car Company, Pittsburg, Pa., has issued its report for the year ended December 31, 1910. The gross sales amounted to $27,975,978, as compared with $10,346,816 in 1909. The net earnings from the operation amounted to $1,697,495 in 1910; there was a deficit in 1909. The net surplus for 1910 was $693,366, or 5.54 per cent on the $12,500,000 common stock, as compared with a $959,583 surplus in 1909, after $1,200,000 had been received from the sale of the common stock of the Canada Car Company. The dividends on the preferred stock amounted to $875,000. President, F. N. Hoffstot says that the company is now in a position to build cars at the very lowest cost in the history of the company.

At the annual meeting of the King-Lawson Car Company, New York, held at Harrisburg, Pa., on February 8, the following officers were elected: President and general manager, Thomas Lawson; vice-president, A. L. Squires; treasurer, John M. Delaney; secretary, Roscoe C. Lawson; directors. Edward Bailey, Arthur King and Curtis M. Rogers. The New York offices of the company were moved on February 20, from 1 Madison avenue, to the Singer building.

The circuit court for the county of Saginaw, Michigan, has rendered a decision in the case of the Willcox Engineering Co., Saginaw, Mich., against Harley C. Alger, dissolving the injunction granted to restrain Mr. Alger from allowing the use of his patents on water weighers by the Kennicott company, Chicago Heights, Ill. Mr. Alger is the inventor of the Kennicott water weigher, and is at present manager of the water weigher department of the Kennicott Company.

The McKeen Motor Car Company, Omaha, Neb., has received orders from the Oregon Short Line for four 70-ft. motor cars and from the Oregon-Washington Railroad & Navigation Company for one 70-ft. motor car. When these are delivered there will be 104 cars of the McKeen type in service.

At the annual meeting of Manning, Maxwell & Moore, New York, on February 13, W. O. Jacquette and R. A. Bole were elected vice-presidents, succeeding Charles A. Moore, Jr., and J. B. Brady. Mr. Moore also resigned as secretary and as a director, and C. M. Chester, Jr., treasurer, was made also secretary. Mr. Brady remains a director.

The Industrial Supply & Equipment Co., Philadelphia, Pa., has been made eastern agent of the Union Machine Co., of St. Paul, Minn.

The McKeen Motor Co., Omaha, Neb., has received an order from the Oregon Short Line for four 70-foot motor cars and one from the Oregon-Washington Railroad & Navigation Co. for one 70-foot motor car. This makes a total of 40 railroads that are operating or have ordered McKeen cars and there are 101 cars of this make in service at the present time. The company has just completed and shipped two cars to the Southern Pacific Co.

The Jones & Laughlin Steel Company, Pittsburg, Pa., is dismantling furnace No. 3 of the Eliza group and will immediately build another blast furnace there, to cost about $1,500,000. This company is now spending about $4,000,000 in the erection of furnaces at Aliquippa, all of which will be in service by May 1. The Pittsburg mills of this company are now operating at about 80 per cent of their capacity. while the mills at Aliquippa are operating at their full capacity. About $25,000,000 is to be spent on the plants at Aliquippa, entirely for new undertakings.

The Pawling & Harnischfeger Company, Milwaukee, Wis., has opened a branch office at 533 Baronne street, New Orleans, La., under the management of T. W. Waddell.

The American Steel Foundries, it is stated, will take up the extensive manufacture of the Davis cast steel wheel, which it has been testing and experimenting with for the past six years.

Mr. A. C. Moore, district manager of the Safety Car Heating & Lighting Co., with headquarters in Chicago, has been appointed general manager, in charge of the commercial interests of the company, with office at New York. Mr. J. G. Van Winkle has succeeded Mr. Moore at Chicago. He will have the title of general agent in charge of the northwestern district.

The Concrete Form & Engine Company, Detroit, Mich., has been organized to combine the Collapsible Steel Form Company, Detroit, and the Belle Isle Motor Company, Detroit. The company will make collapsible steel forms for concrete culverts, conduits and sewers, general concrete and road-making machinery and Bell Isle gasolene engines for railway velocipedes and power cars. The officers of the company are: W. B. Gregory, president; Harry W. Frost, vice-president; W. W. Kenyon, vice-president; W. C. Shanafelt, vice-president and general manager; L. K. Rumsey secretary and treasurer, and W. D. Waugh, assistant general manager.

This Famous Limited Train

photographed when passing over the Hackensack Meadows, is carried between the Manhattan Terminal and Manhattan Transfer by a four thousand horsepower electric locomotive. The Hudson River, New York City and the Terminal lie beyond the heights in the distance. The Pennsylvania-Long Island installations constitute the most important direct-current main line system in the world and all power is generated and applied through Westinghouse apparatus.

Whether operating conditions render Direct-Current, Single-Phase or Three-Phase Electrification preferable, Westinghouse Apparatus is unequalled.

The Pennsylvania Special Under Electric Power
Direct-Current System

Heavy Passenger Traffic

between New York City and New England on the New Haven System has been handled by Single-Phase Electric Locomotives over the New York Division for more than three years. This is not only the largest and most important Single-Phase electrification of steam railroads in the world, but the first trunk line to plan extension of electric operation to entire main line divisions. All power is generated and applied through Westinghouse apparatus.

Whether operating conditions render Direct-Current, Single-Phase or Three-Phase Electrification preferable, Westinghouse Apparatus is unequalled.

A New York, New Haven and Hartford Heavy Electric Train
Single-Phase System

The Giovi Line

connects Genoa, Italy's greatest shipping port, with its greatest manufacturing center at Milan. In addition to passenger and general freight traffic, hundreds of cars of coal are daily sent to Milan through the Giovi tunnel over 3½ per cent grades. The photograph shows two, 2,000 horsepower, Three-Phase electric locomotives starting from the Pontedecimo Station in Genoa with a train load of 435 tons. All power is generated and applied through Westinghouse apparatus.

Whether operating conditions render Direct-Current, Single-Phase or Three-Phase Electrification preferable, Westinghouse Apparatus is unequalled.

Electricity in Freight Service
Italian State Railways
Three-Phase System

Recent Railway Mechanical Patents

Material for this department is compiled expressly for RAILWAY MASTER MECHANIC by Watson & Boyden, Patent and Trademark Attorneys and Solicitors, 918 F Street, N. W., Washington, D. C., and to them all inquiries in regard to patents, trademarks, copyrights, etc., and litigation affecting the same should be addressed.

A complete printed copy of the specification and drawing of any United States patent in print will be sent, postpaid, on application to the above firm, to any address for ten cents.

RAILWAY BRAKE BEAM.

981,619—Seth A. Crone, East Orange, N. J. Patented Jan. 17, 1911.

This invention resides particularly in a novel construction of the compression and struct members of the beam. As shown in the drawings the compression member is of channel shape and the flanges 13 are much heavier than the web 14, thereby giving increased strength where it is needed without unduly increasing the weight of the member.

ELECTRIC LOCOMOTIVE.

981,741—Hans G. Berentsen, Pittsburg, Pa. Patented Jan. 17, 1911.

In regard to this arrangement the inventor says:

My invention relates to electric locomotives and other railway vehicles and particularly to such vehicles as are provided with motor-operated pony trucks having limited swinging adjustments.

981,741.

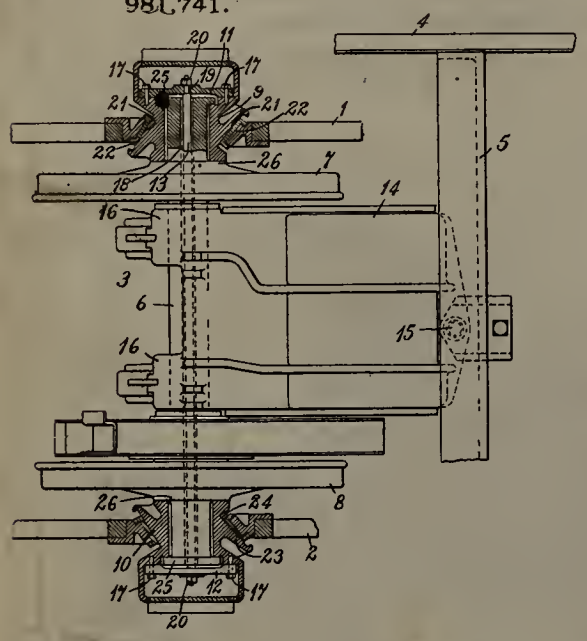

The object of my invention is to provide simple and effective means for resisting the tendency for the journal boxes of a locomotive, equipped as above indicated, to spread apart or to approach each other by reason of the fact that the driving effort exerted by a swinging pony truck is applied to the side frames at an angle to the direction of movement of the locomotive.

Pony trucks have heretofore been provided with such bearings in the side frames of the locomotive as to permit a limited swinging adjustment about a point in the central plane of the vehicle and at some distance from the center line of the axle. When trucks of this character are used merely for guiding purposes there is only a small tendency for the journal boxes to either spread apart or approach each other, but when trucks of this character are provided with driving motors, there are obviously material components of the forces exerted upon the side frames which tend to either separate the journal boxes or draw them together, depending on the position of the truck and the direction of movement of the locomotive. If these forces, which perform no useful function, are not overcome, they create such an end thrust between the bearing boxes and either the axle collars or wheel hubs as to produce high temperatures and excessive wear.

According to my present invention, I bore a hole directly through the center of the axle to receive a tie-rod, the ends of which are rigidly secured to the journal boxes, the arrangement being such that the tie-rod is subject to strains in tension or compression and only useful driving forces are transmitted from the journal boxes to the side frames. This arrangement commends itself, not only on account of the simplicity and lightness of the tie-rod structure, but also on account of the very small amount of labor which is necessarily expended in adapting it to standard structures. When the axles are large and are called upon to sustain great weights, it is desirable to bore holes through their centers in order to remove the relatively poor metal commonly known as the "pipe" which is produced when they are forged.

LOCOMOTIVE VALVE GEAR.

982,989—Henry J. Pilliod, Chicago, Ill., assignor to Pilliod Brothers Co., Toledo, Ohio. Patented Jan. 31, 1911.

This patent is one of several granted on the same date and relating to the same subject, the other patents being Nos. 982,990 and 982,991.

The object of the present invention is to improve the construction of variable cut-off and reversing valve gears for locomotives, and to provide a simple and efficient valve gear, adapted to correct the evils of valve motion, viz., the unequal port opening, cut-off and release due to the angularity of the eccentric arm, and to produce an equal travel of the valve at the backward and forward movements thereof and a uniform distribution of steam.

Another object of the invention is to equip the valve gear with an imparting motion device, which will secure a uniform rotative speed for actuating the eccentric arm and which will compensate for vibration and lateral motion of an engine and prevent fatal effect of such motions on the valve gear.

The drawings of these patents are quite elaborate and limited space forbids a complete description. For a better understanding of the devices reference should be had to the patent itself.

981,619.

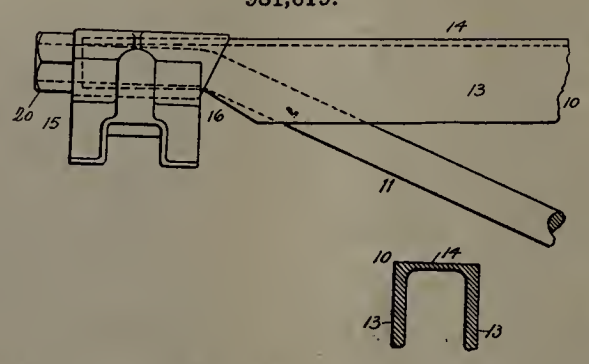

983,080.

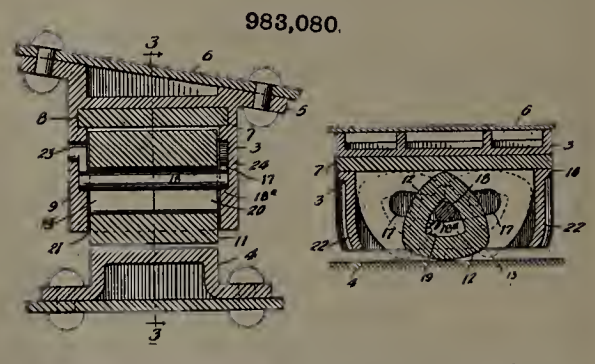

ANTIFRICTION SIDE BEARING FOR RAILWAY CARS.

983,080—John F. O'Connor, Chicago, Ill., assignor to W. H. Miner, Chicago, Ill. Patented Jan. 31, 1911.

The object of the invention is to provide a self-centering antifriction side bearing capable of automatically returning to its central or normal position by its own gravity. The roller or rocker consists of a curved face polygonal bearing member clearly shown in the illustration. The operation will be apparent.

VALVE GEAR.

983,843—Theodore C. Sewell, Portland, Oregon. Patented Feb. 7, 1911.

This invention relates to valve gear for multiple cylinder steam engines and is intended more particularly for compound engines, and the object of the invention is to provide simple and efficient means for changing the travel of the steam valves so as to produce an early or late cut-off, and further to provide means whereby with one operating lever the engineer can change the travel of one steam valve and thus produce an early or late cut-off in one cylinder without changing the other, and further to provide an interlocking device so that the valve will operate in unison when desired. This is especially desirable on compound locomotive engines where it is desirable to use a short travel and early cut-off on a high pressure cylinder and a full travel and late cut-off on the low pressure cylinder.

As shown in the illustration the arrangement comprises a hand lever having a locking rack, and means associated therewith for interlocking such main lever with an auxiliary lever so that both valves may be moved in unison.

982,989.

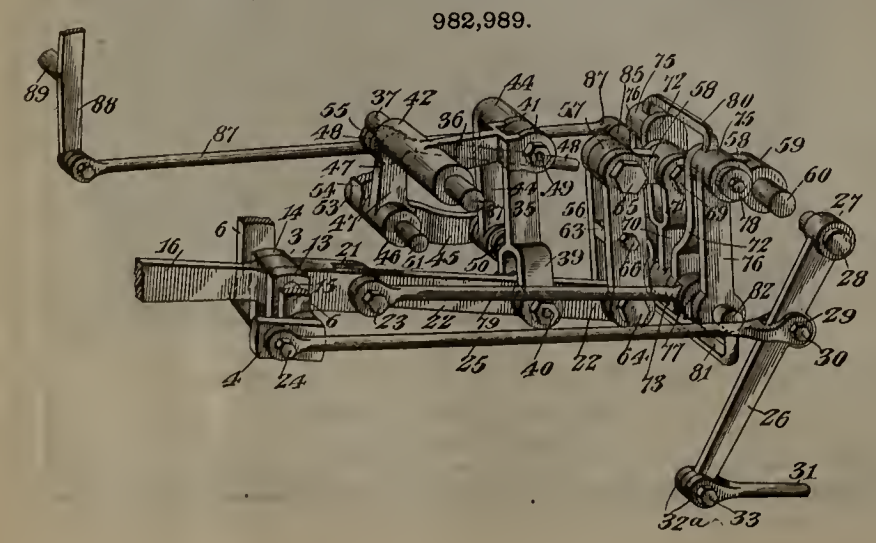

983,843.

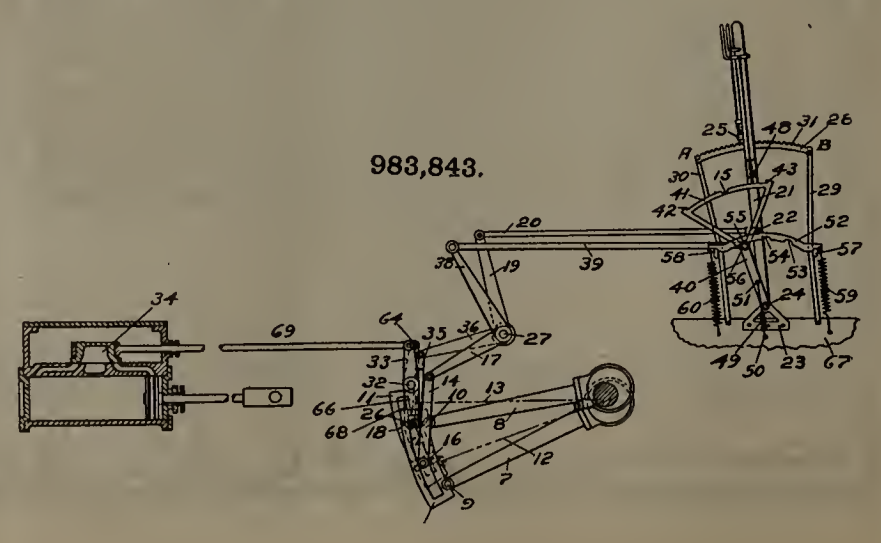

RAILWAY MASTER MECHANIC

Established 1878

Published by THE RAILWAY LIST COMPANY

WILLIAM E. MAGRAW, Pres. and Treas.
CHAS. S. MYERS, Vice-Pres.
C. C. ZIMMERMAN, Bus. Mgr.
J. M. CROWE, Mgr. Cent. Dist.

LYNDON F. WILSON, Managing Editor
OWEN W. MIDDLETON, Assoc. Editor
KENNETH L. VAN AUKEN, Assoc. Editor
WARREN EDWARDS, 2d V.-P. & Assoc. Editor

Office of Publication: Manhattan Building, Chicago
Telephone, Harrison 4948
Eastern Office: 50 Church Street, New York
Telephone Cortlandt 5765
Central Office: House Bldg., Pittsburg, Pa.

A Monthly Railway Journal

Devoted to the interests of railway power, car equipment, shops, machinery and supplies.
Communications on any topic suitable to our columns are solicited.
Subscription price, $2.00 a year; to foreign countries, $2.50, free of postage. Single copies, 20 cents. Advertising rates given on application to the office, by mail or in person.
In remitting, make all checks payable to the Railway List Company.
Papers should reach subscribers by the 16th of the month at the latest. Kindly notify us at once of any delay or failure to receive any issue and another copy will be very gladly sent.

Entered as Second-Class Matter June 18, 1895, at the Post Office at Chicago, Illinois, Under Act of March 3, 1879.

Vol. XXXV. Chicago, April, 1911 No. 4

CONTENTS.

Editorial—
- Progress in Oxy-Acetylene Welding 121
- Government Ownership 121
- The Situation in Brief 122
- A Modest Request 122
- The Smoke Problem in India 122

The Master Mechanic's Dream 122
High Voltage Direct Current Railway Power in Switzerland 123
Electrification of Chicago Railways 124
Machine Equipment in Huntington Shops, C. & O. Ry 130
Mikado Type Locomotive, C., B. & Q. R. R 131
Car Stenciling 133
Calculating Foundation Brake Beams 134
Dupo Yard Lighting 137
Steam Turbines for Locomotives 139
Generation and Distribution of Electric Power 140
Weight Transfer in Electric Cars and Locomotives 144
New Bettendorf Steel Car Plant 147
Personals 153
A Fireman's Record 154
Apprentice School, Pennsylvania R. R 154
Among the Manufacturers 154
- Goetze Gaskets 154
- Lamb Portable Drill 155
- New Literature 155
- Industrial Notes 156

Meeting of Executive Committee, C. I. C. I. & C. F. Assn.. 157
Recent Railway Mechanical Patents 160

PROGRESS IN OXY-ACETYLENE WELDING.

Every shop of any size has by this time had more or less experience with the oxy-acetylene and similar processes of welding, and while the results have not always been all that might be desired, the practicability of the method has been firmly established. The variety of work to which it is adapted and the saving effected should bring it into especial prominence during these days of strenuous efficiency methods. Judging from results already obtained, one of the factors which has much to do with its success or failure in particular instances has been the man on the job. It is much the same as the treatment of high-speed steel—the operator must have a certain amount of instinctive skill in order to produce the best results and he should be allowed to specialize in this work. Some of the failures have been due to allowing too many different individuals to attempt the welding, no one becoming proficient at it. This is an age of specialization, and the man behind the torch should be a specialist. One of the serious drawbacks from the operator's point of view has been the strain to the eyesight, but the use of smoked glasses does away with this.

Considerable work has been done along the line of inserting patches in side sheets and it has been found that patches of almost any convenient size may be successfully welded—in fact, welds of twelve to fifteen feet in length have been reported. A saving of from 50 to 75 per cent has been made in the cutting out of fireboxes and side sheets, and for this work it has proven very successful. In welding cracks in flue and side sheets difficulty has been experienced, due to the subsequent contraction of the metal and the formation of a new crack. In order to overcome this difficulty in putting in patches very successful results have been obtained by pressing a U-shaped bend along the edge of the patch to take up the contraction.

Welding tire flanges, connecting rods, tool holders, shafts and even spokes in cast iron pulleys are some of the diversified uses to which the oxy-acetylene process has already been put, and it seems that the limit has by no means been reached. The increasing use of steel passenger cars has also opened a new field for this work and one which is sure to grow in importance.

GOVERNMENT OWNERSHIP.

An experience with government ownership of a large public utility has resulted disastrously in England, as evidenced from the following facts which are taken from an authentic report published in the London Spectator:

It appears that when a plan for the purchase of the telegraph by the postoffice was brought up an enthusiastic postoffice official, Mr. Scudmore, deceived himself and others with estimates that were mere imaginings. The purchase price jumped from £2,500,000 to £7,000,000 by the time the government bought, and then £4,000,000 was added owing to a little oversight. It was discovered after the deal had gone through that the telegraph companies did not have a freehold interest in their wires along the railroads, as was

supposed, but that their interest was in leases only, and so it was necessary to settle the claims of the railroads.

Now as to the business. Dreams of a net revenue of 8.8 per cent on the capital were dissipated. No interest at all was paid on the capital out of profits after the second year. The system is kept going by government grants, and is a charge against the taxpayer. The cost of working the lines has increased, gross revenues are below gross expenditures, rate reductions have been an unprofitable venue. At this date there is a commercial loss of £35,000,000; each year there is an addition loss of £1,000,000; the working cost per thousand telegrams is more than it was thirty years ago. It is proposed, therefore, by critics of the system that instead of perpetuating it and acquiring the business of the National Telephone Company as well the government should create a new authority to take over both utilities.

From these facts it would appear that the extreme regulatory legislation course apparently so generally adopted in this country, while resulting in nearly the same ends as government ownership, is far ahead of (or behind) the latter in that the burdens and responsibilities remain with the corporation. This is a condition of affairs which cannot last, however. Government ownership, proving impracticable, means must be devised of insuring the safety of private capital, invested in public service corporations, more especially in our railways, against the depredations of ignorant and malicious regulatory legislation.

THE SITUATION IN BRIEF.

Under the heading, "The Situation in Brief," the recently created Bureau of Railway Economics in its Bulletin No. 10 points the following somewhat sinister statement:

"January returns, when reduced to a per-mile basis, show a decrease with respect both to the returns for the preceding month, and to those for the corresponding month of the previous year. Net operating revenue, that is, total revenues less operating expenses, for all roads reporting, show a decrease per mile from the figure of January, 1910, of $18, or 7 per cent, and from the figure of December, 1910, of $76, or 25 per cent."

A MODEST REQUEST.

Inventors without influence must rely on the real and evident value of an improvement for success and financial reimbursement. For the one with a friend at court matters can often be hastened, however. Indeed he can often do so much more that it is not always necessary for the inventor to present a particularly valuable improvement, as evidenced by the following, taken from the daily press:

> "Representative Wm. B. Craig was a locomotive engineer fourteen years ago, and a friend, J. T. Andrew, now a rich planter, was a fellow railroader. Since becoming a planter Andrew has been working on a device to prevent the wrecking of trains that may become derailed. Having completed it, he equipped an engine and train and took it to Washington, where it was given a trial before a number of congressmen. Being wealthy, he does not care to sell his patent to any railroad that might sidetrack it, but wants all roads equipped with his device in order that the public may be benefited. All he asks is that Congress recommend to the Interstate Commerce Commission that the railroads be ordered to use the invention."

In these days it seems unnecessary to go to the effort of demonstrating to the railway official the value of an invention since it appears so much more simple to use influence with legislators. Moreover, the results from the latter proceeding are much more certain.

THE SMOKE PROBLEM IN INDIA.

They are having trouble with the smoke problem over in India now. The health commitee of Calcutta is at present considering the recommendations of the smoke nuisance commission, among which are the more effective suppression of coke making in open fires, the prohibition of open flame oil lamps and the bringing of ship and domestic furnaces under the proposed act, as well as locomotives, which is a broader view than some of our American cities are taking.

THE MASTER MECHANIC'S DREAM.

By R. S. Lloyd, Chief Clerk, Motive Power Department, C. & E. I. R. R.

The first that I remember was the smell of gas and smoke;
Then I heard an angry voice say "Where is that reckless bloke."
Then a puffing and a blowing, as up the stairs it came,
I could tell from its breathing that it was very lame;
Down the hall it staggered, and how my heart did jump,
When at the door of the nursery, it gave an awful thump.
Out of my bed I sprang, tip-toed to the door,
And there peeping in at the youngsters, I saw the 304;
Ah, then I well remembered, but too late, as often true,
That it was still in service, although for the shop long past due.

I heard her command silence to all her numerous parts,
And with a smile she said "God Bless Their Little Hearts";
"I must not wake them for t'would give them such a scare,
And to make the darlings suffer, is more than I can bear";
She closed the door more gently than could either you or I,
Then on she came so silently, she really seemed to fly.
My door flew open and with a lunge she landed right upon my bed,
Her pony trucks in my stomach, her steam chest on my head.
I tried to call for help, but t'was of no avail,
She jammed the air hose down my throat and pumped an awful gale.

Then she said:—
"When you are through struggling, a few words with you I wish to speak,
I have often wanted to meet you, I believe you are the Master Mechanic;
You know it's been twenty months since the day you turned me out,
Still you expect me to make the time, pulling your ten-car trains about;
I know that you are busy, cannot always do as you elect,
So I took this opportunity of letting you inspect."
Her flues were very weak and her tires were very thin,
The cab was all loose and the headlight stove in;
Her fire-box was cracked and her machinery was poor,
I thought that was all, but she declared there was more.

She was loose in her boxes and her valves were out bad,
Other defects so numerous, she had cause to be mad.
I acknowledged my guilt, though badly scared,
And promised to see that she was immediately repaired.
"Toot" "Toot" said she, "All I want is fair play,
But remember if you do not, I will see you again, some day;"
"These record-breaking stunts may be all right on the Santa Fe,
But the conditions here are different, so please don't try it on me."
I assured her that to my promise I'd be true,
She beamed on me most pleasantly and seemed to fade from view.

HIGH VOLTAGE DIRECT CURRENT RAILWAY POWER IN SWITZERLAND.

The electric locomotives utilized on the Wengenalpbahn between Lauterbrunnen, Wengen and Scheidegg, in southern Switzerland, may be noted in the accompanying illustrations. On this mountain electric line the travel is, of course, the greatest in summer, amounting to 6,840 train-miles and about 207,000 ton-miles, the average weight of the train being 28.5 tons. In winter the traffic is light, amounting to 980 train-miles, with 28,100 ton-miles, the weight of the train being about 26 tons.

View of Station and Electric Rack Locomotives at Wengen.

This is a rack railway and it is interesting to note that it is operated with a direct current of from 1,500 volts to 1,800 volts, differing from the low pressure city electric lines of 500 volts and from other mountain railways which utilize largely three-phase alternating current equipments. These direct current electric locomotives are capable of hauling two cars, having a seating capacity of 48 passengers each, at a normal speed of 5.3 miles per hour on a 25 per cent grade and a train of three such cars at the same speed on an 18 per cent grade. When operating on a 25 per cent grade the electric motors develop 300 horse-power, the total weight of the train being 33.5 tons, of which the locomotive weighs 16 tons, the two cars 10.5 tons and the 96 passengers 7 tons. When operating with a train of three cars on a grade of 18 per cent, the electric motors develop 280 horse-power, the train weighing 42 tons, the locomotive weight remains the same, the three cars weighing 16 tons, while the weight of the 144 passengers is 10 tons. The road has a gauge of 2.6 feet and the shortest curve has a radius of 257 feet. The electric locomotive is 18 feet in length and 10 feet in height, and the motors drive through double reduction gearing. The distance between the gears is 3.8 feet and the diameter 2.3 feet, with a ratio of transmission of 1:11:45. Each of the two electric motors on this locomotive has a normal capacity of 150 horse-power, operating at a speed of 750 revolutions per minute, the voltage of each machine is from 750 to 900 volts and they are connected in series, being supplied with current from the overhead trolley line at a pressure of from 1,500 to 1,800 volts.

The locomotive is provided with both hand brakes and automatic brakes which bring the train to rest in from 2½ seconds to 6½ seconds, according to the weight of the train, its speed and the grade on which it is operated. The train is electrically lighted and heated, about 20 kilowatts of electrical energy being required for heating the three cars. The maximum speed attained is about 6.8 miles per hour, while a speed of 5.6 miles per hour is attained on a grade of 15

Electric Rack Locomotive with Casing Removed.

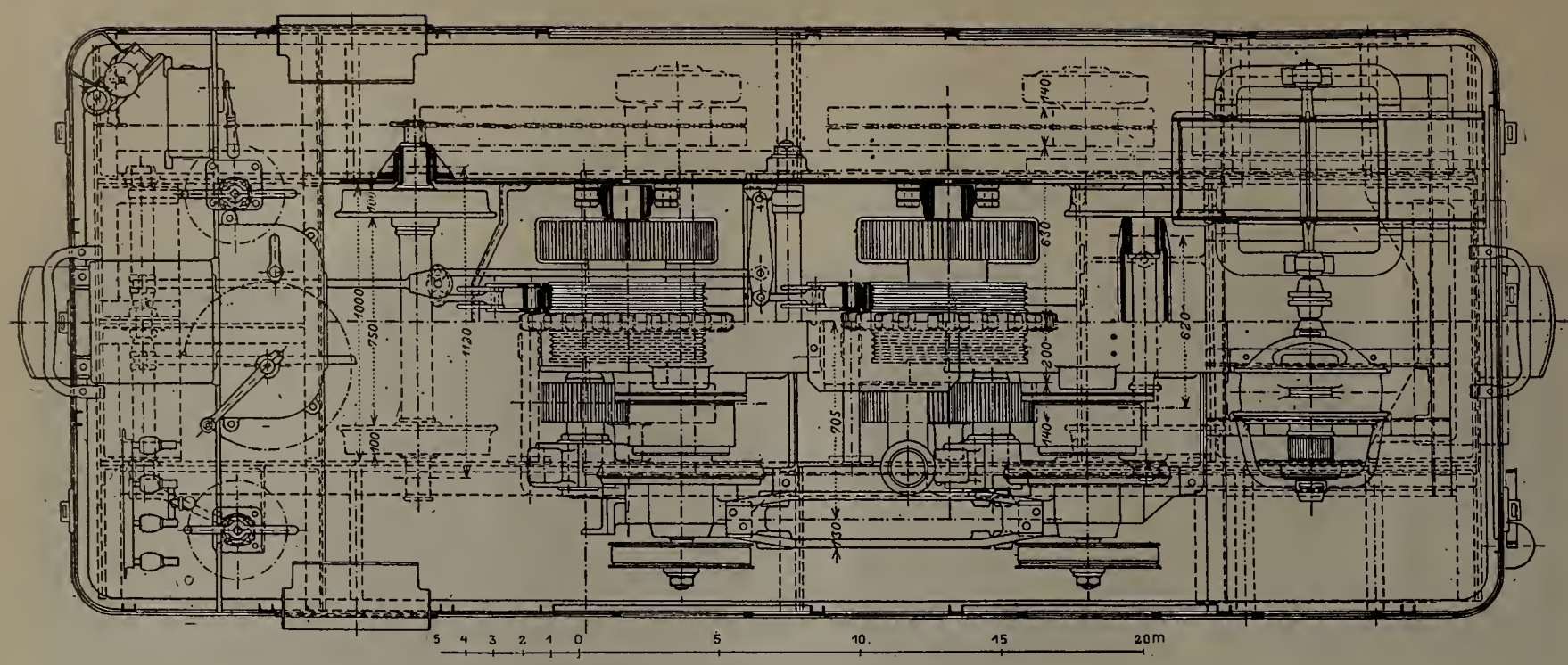

Plan of Electric Rack Locomotive.

per cent. The electric locomotive and cars were designed and constructed by the Schweiz Lokomotiv-und Maschinen fabrik at Winterthur in connection with the Elektrizitats-Gesellschaf Alioth of Munchenstein.

ELECTRIFICATION OF CHICAGO RAILWAYS.*

By C. A. Seley, Mechanical Engineer, C. R. I. & P. Ry.

In November, 1909, I had the honor of presenting to the Western Railway Club a paper bearing the same title and introduction as this one, and my excuse for again appearing before you is a belief that the time is ripe for a review of the conclusions then arrived at and of the progress of the art since that time.

The smoke production by the railways in Chicago is still a matter of such grave importance according to the local press as to call for early and complete electrification of the railways. Most of these press articles are without qualifications as to the merits of the case, possibilities or otherwise, and it is with pleasure that I quote the following editorial from the Record-Herald of February 17th as admitting there may be two or more sides to the question and urging study, co-operation and good faith as between the railroads and civic agencies. The editorial is as follows:

"Chicago Smoke and the Railroads.

"Tests and calculations made under the direction of the chief smoke inspector, Mr. Bird, show that the locomotives of the railroads entering Chicago make 43 per cent of all our smoke and discharge 560 tons of cinders every day in the year.

"There may be error in the calculations, but even the average 'man on the street,' or in a train entering or leaving Chicago, is well aware that the railroads are responsible for much of our smoke and dirt. This, however, is not necessarily an indictment of the railroads. A condition confronts them—the same condition that confronts the rest of us. They are here and we are here. Electrification is the only solution of our smoke and cinder problem as far as the railroads contribute to it, but electrification cannot be ordered in a day or a year, and a mere ordinance will not bring it about. An earnest study of the very difficult question is needed—study, co-operation and good faith.

"The railroads should work with the city and with those civic agencies which, like the City Club and the Association of Commerce, are grappling with the problem. Progress will be rather slow at the best, but this very fact gives us the strongest argument against delay, negative talk of a vague character, the raising of fanciful objections. Electrification is the goal, and to reach a goal you must move, not stand still, and move toward it, not away from it."

This is exactly in line with the recommendations in my former paper and also what has been done recently in Massachusetts with reference to electrification of the steam railway lines in Boston, which will be referred to later.

Since my former paper was written, the Michigan Central tunnel at Detroit and the Pennsylvania Railroad tunnels at New York City have been completed and are now electrically operated.

The former is a general transfer proposition of freight and passenger trains under the Detroit river, instead of over it in car floats, using electric locomotives specially designed for the work to be preformed. Trains are handled from stations or yards through the tunnel to the station or yard on the other side, steam locomotives performing the preliminary and following movements. The P. R. R. electrification takes passenger and suburban trains from points in New Jersey and Long Island to and from their new passenger terminal in New York City.

The Detroit installation had its precedent at Baltimore on the Baltimore & Ohio and later at Sarnia on the Grand Trunk and again on the Great Northern in the Cascade tunnel, although none of the three are similar in the systems employed.

The Baltimore & Ohio uses direct current, generated in their own power houses. The Great Northern is the only example of three-phase electrification in this country, although there is something over one hundred miles of main lines in Europe thus equipped. The Sarnia installation is single phase and about 3.5 miles of line.

The Detroit installation is D. C., the current being purchased from a local company which generates it three-phase, 60 cycles, 4,400 volts, the railroad company installing a sub-station with rotary converters, etc., for transformation.

The Pennsylvania Railway electrification at New York City employs direct current, generated at their power house on Long Island.

It has been stated that every system of electrification has its own particular features that must be taken into account in devising the best arrangement to suit the situation. It is very likely that this will account for the varying features in the electrifications quoted, as no two of them are exactly similar. Aside from the general features of the systems,

*From a paper read before the Western Railway Club March 21, 1911.

the details vary, partly for these reasons and perhaps also that the later ones represent deevlopments in the state of the art.

Take for instance the design of electric locomotives, The New York Central gearless, the New Haven quill-mounted gearless, the P. R. R. side rod gearless, the Detroit and later B. & O. horizontally supported motor with twin gearing, and others yet to be heard from. There seem to be five or more methods of applying the motor on electric locomotives, and it may take some years to settle down to the best practice.

Each system of electrification has its advocates; and elaborate estimates, covering costs for installation and maintenance, have been made, so that in a general way we are in possession of data giving the cost per mile for the various features in connection with the installation, cost of the current, attendance, maintenance, etc., which combined with the special features of each situation, will give an intelligent view of the problem. My former paper stated the elements of the calculation, and I can only say in addition that we now have some data not generally available when that paper was written.

An analysis of the steam railroad electrifications in this country develops the following facts: There is no complete electrification of any railroad or of any railroad terminal of any size comparable with any of the principal Chicago railways; the principal electrifications are to facilitate or make possible tunnel operation on railroads when the length of tunnel or grades or both would render the operation of steam locomotives impossible on account of smoke and gases, and the question of concentration of power may also be a factor.

The amount or length of lines electrified in most cases is so very short that it may be impressive to repeat some of them:

Grand Trunk at Sarnia, 3.5 miles of line, 12 miles of single track.

Michigan Central, at Detroit, about 4 miles of line, 19 miles of single track.

Great Northern at Cascade tunel, 4 miles of line, 6 miles of single track.

B. & O., at Baltimore, 3.7 miles of line, 7.4 miles of single track.

New York Central Railway at New York, 23 miles of line; 132 miles of single track.

New Haven Railway at New York, 21 miles of line, 100 miles of single track.

Pennsylvania Railroad at New York, 20 miles of line, 75 miles of single track.

The first four cases are strictly tunnel propositions for the transfer of both passenger and freight trains with a limited amount of switching. The last three are strictly passenger and surban movement with practically no freight.

There are some electrifications abroad, but they are mainly for tunnel operation. A list in a paper compiled by Mr. George Westinghouse, dated July, 1910, gives 152 electric locomotives for roads in this country and 72 abroad, so that we are not behind the rest of the world in regard to number, and our average horse power is considerably higher than abroad. We also excel in mileage of electrification, requiring electric locomotives. There is in this country and abroad a considerable mileage of lines using motor cars instead of locomotives. These will not be considered, as they are generally for passenger service with such a limited amount of freight as not to make them comparable.

From the character of the newspaper side of the controversy and also from the reading of proposed ordinances considered to cover the Chicago situation, it will be noted that nothing short of complete and entire electrification of all steam railroad rails within the city limits is contemplated, so that steam locomotives will not be permitted for any class of service.

According to figures compiled by Chief Smoke Inspector Bird during the summer of 1910, there was, in round figures, 670 miles of main tracks within the city limits owned or controlled by 26 different railroad companies. There are in addition 1,512 miles of side tracks, or a total of nearly 2,200 miles of single track which it is proposed to electrify in two years or less. I have purposely detailed the lengths of electrifications already accomplished elsewhere at most enormous costs, to bring into contrast the task proposed for Chicago railroads. The total mileage of single track of the seven electrifications listed is 351 miles. The total miles of line is 89.2, and on either basis the size of the Chicago job as compared with the totals of the seven is as over six to one.

It may be urged that the mere size of the job is not an argument against electrification in Chicago and that it would be divided up among so many railroads that the proportion to each is the real problem rather than taking it in bulk. At the risk of repeating some of my former paper, would say that the connections and interchange between the various roads makes them almost as one and requires a co-operation as to methods pursued, a similarity as to system, and many of the details to be employed, and the ability of the weaker as well as the stronger lines to assume the financial burden imposed.

All of these factors for complete electrification can only be arrived at by the very proeess suggested in the Record-Herald editorial, and I am exceptionally fortunate in being able to report from information in the current technical press of a commendable example of such handling of a very similar problem in regard to the electrification of steam railway lines in the Boston district.

The Massachusetts Joint Board on Metropolitan Improvements was appointed in 1910 to investigate proposed public improvements in the vicinity of Boston, this board being comprised of members from the Board of Harbor and Land Commissioners, the Metropolitan Park Commission, the Board of Railroad Commissioners, and the Boston Transit Commission. The joint board made a very exhaustive report of nearly 150 pages to the legislature on January 30th, including the question of electrification of the steam railroads in the Boston district. Passenger and suburban lines only were considered, freight and switching not being included, so that the consideration is not for complete electrification, as is the case in Chicago.

The situation in Boston is quite similar to Chicago in having water on one side and radiating lines of railway from the center of the city, the total mileage of single track being 589 miles, or 81 miles less than Chicago. No mention is given of the mileage of side tracks, which must be considerable, although probably less than in Chicago.

The two railroad companies involved, viz., the Boston & Albany, controlled by the New York Central, and the New York, New Haven & Hartford, which also controls the Boston & Maine, reported to the board their estimates as to the cost and other data, this being facilitated by the fact that these two interests electrified their New York terminals and thereby gained experience in the art. These estimates amounted to over $40,000,000 for the 589 miles of electrification and the equipment to be used thereon.

Time forbids giving more than a brief summary of the conclusions of the board who made one majority and two minority reports.

Nine members joined in the majority report and I quote a summary of their conclusions:

(1) "The electrification of steam roads is a development

much to be desired. It would add to the comfort and convenience of the public and would have advantages for the railroads as well."

(This is, no doubt, true as a general proposition.)

(2) "The best method of electrification is still undetermined. The science is in a state of rapid change and standardization is much to be desired before extensive electrification is undertaken."

(The statement is proven by my anaylsis of present electrifications, no two of which are identical. The two railroads involved proposed systems similar to what they had already in use in New York and which are absolutely dissimilar. If two railroads after some years of experience and observation thus disagree on fundamentals, it indicates something of the difficulty in arriving at a satisfactory solution of the problem in Chicago with twenty-six railroads to line up to agreement.)

(3) "So far as experience has yet shown, the electrification of the terminals of steam railroads under present conditions does result in economy, but, on the contrary, increased expense, aside from the interest on the first cost incurred."

(No one knows more about this than the two railroad companies involved.)

(4) "If a greatly increased traffic should result from electrification, this expense would be reduced and might ultimately be changed to a profit."

(The increased traffic would necessarily come from suburban travel, the profitable features of which would be problematical on the lines now carrying that travel while many Chicago lines have none.)

(5) "Electrification would probably result from some time in obliging the railroads to make charges to operating expenses due to property abandoned or replaced, in addition to interest on new capital and increased expense of operation."

(The reason for this is that the regulations of the Interstate Commerce Commission requires a railroad to replace in kind any of its structures or equipment out of earnings.)

(6) "Electrification would, therefore, in all probability require an increase of passenger fares and perhaps of freight rates to produce the revenue required to pay for it."

(This is already true in New York City as regards passenger and suburban rates and probably would be with regard to freight if that were involved.)

(7) "Electrification, while desirable, is not necessary nor is it required on grounds of public safety. It is desirable mainly, if not entirely, on account of added convenience and comfort."

(It will be noted that there is no reference made to elimination of smoke, except inferentially with reference to convenience and comfort. The principal feature of federal regulation of railroads aside from rates is for safety. A railroad, however, has to provide for the safety of the public whether on the cars or not, and the number of danger signs used on some of the electrifications is proof of the existence of an added element of danger to the public unless extra precautions are taken not necessary on steam lines. In my former paper attention was called to the fact that the electrifications now in use are almost entirely in protected rights of way, which is not possible in Chicago ith the hundreds of open crossings, team and industrial tracks, switching yards, etc., the electrification of which is bound to add material elements of danger to the public and the railway employes.)

(8) "There are other expenditures which should be made by the railroads which are demanded by considerations of necessity to enable them to meet the demands of increasing traffic and which should have precedence of electrification. To compel electrification would postpone these more important improvements."

(The amount of this is even greater in the West than in the East, due to age and development of transportation facilities.)

(9) "The railroads are already subject to much regulation by the state and the nation. To require them to expend large sums of money for electrification would make it difficult if not impossible for them to raise the capital required to move the increasing traffic of the country and would thus hamper industrial development."

(The arguments of the railways for increase of rates include a large amount of information as to the cost of compliance with state and federal legislation on such a variety of matters that the situation is becoming intolerable.)

(10) "As a result of the foregoing conclusions, the board believes that it is not wise nor in the public interest to enact legislation compelling any electrification of railroads."

(If the foregoing conclusions are fair, what other deduction could be made?)

(Conclusions 11 and 12 are local considerations regarding a tunnel between Boston stations, and not apply to the Chicago situation.)

(13) "The traffic to be handled in Boston is nearly three times that at the Grand Central Station in New York and, on account of the radiating traffic in Boston (as compared with the north and south traffic in New York) and the large number of lines in Boston (as compared with the single line with three branches in New York), the expense in Boston is very much greater. There is not sufficient justification for requiring the railroads to spend this sum of money here."

(It is believed that this is even more true as regards Chicago.)

(14) "If electrification of steam roads, either for passenger or freight or both, is required by law, it should also be provided that the revenue may be increased so as to afford reasonable compensation to the roads for the expense involved and to make it possible to raise the necessary capital."

(As railway rates are controlled by federal law, it is difficult to provide for such an increase.)

(15) "If the expense of electrification is forced upon the railroads by legislative enactment, a fair increase of rates and fares will be inevitable, and it should fairly be laid upon Boston business and might add to the disadvantages under which Boston now labors."

(Assuming that the difficulties in the way of an increase of freight rates could be overcome, undoubtedly the business interests of Chicago would have to carry a handicap as compared with those of other cities not enjoying the luxury of electrification of their railways.)

(16) "The benefits of electrification in Boston will accrue mainly to the commuters and short-distance traffic and also in a very large degree to owners of property along the lines electrified. To raise suburban fares simply would place the burden where it mainly belongs, but where it is least capable of being borne; and such action would in itself tend in some measure to discourage the development of suburban territory and to divert travel from the steam lines."

(No doubt true also of Chicago.)

(17) "Electricity is probably the coming form of traction power; indeed, it is not improbable that at some time in the future all the trunk lines of the country which there is heavy traffic will be electrified. The problem, however, is not like that of providing safety appliances, such as air brakes, signals, standard couplers, or the abolition of the car stove and replacing it by steam heat from the locomotive. All of these matters were required from considerations of safety. The public demand for electrification, however, arises not from considerations of necessity or of safety, but from those of convenience. Considering that there are other

Map of Chicago Showing Zone Considered in Plans for Railway Electrification.

Map of Boston Zone Considered In Plans for Electrification of Railways.

improvements which are necessary in order to meet the demands of increasing traffic, the joint board believes that an improvement resting on considerations of convenience should be allowed to work itself out without legislative enactment."

(The first sentence is rather optimistic. The problem is fairly stated, however, in the remainder of the conclusion and again there is no reference to smoke, although public necessity is referred to coupled with safety.)

(Conclusion 18 is another reference to a local condition and looking to future development, a feature which should be kept in mind as regards Chicago.)

(19) "It should be recognized that all improvements of this kind, whether they are the construction of tunnels or the electrification of lines, which afford greater facilities to the public and involve the expenditure of large sums on the part of the railroad companies, if not offset entirely by increased earnings or reduced expenses, should be accompanied by such increase of fare or rates as will enable the roads to maintain a fair rate of return upon their total investment. In all such improvements, the public is a partner in the undertakings. The principal benefit accrues to it with no risk. Its attitude should be such as to encourage the legitimate and econominal expenditure of capital and to compensate it fairly and even liberally for any risks involved. Under the laws of this state there is little danger of a misuse of capital expenditures."

(The attitude of the public is here fairly stated.)

The first minority report was signed by five members, and is quoted in full:

"The undersigned dissent from so much of the report as relates to electrification and submit the following statement. Without undertaking to discuss in detail the statements and conclusions set forth in said report, it is enough to say that, taken together, they amount to a declaration that electrification is, for the present, impracticable. In our opinion, experience elsewhere has demonstrated both the feasibility and the financial ability of railroad corporations to equip a portion of their lines with electricity, and we find no conditions in Boston or its vicinity which lead us to a different concluson. Indeed, the officers of the New York, New Haven & Hartford Railroad Company have stated to the Commission on Commerce and Industry, and on several occasions to the public, their purpose, if allowed to control the Boston & Maine system, which control is now effected, 'to equip both systems with electricity for a considerable distance near Boston.' The further proposals of this management to electrify the Boston, Revere Beach & Lynn Railroad, if authority to acquire the same is granted by the general court, is additional evidence that electrification to some extent is both feasible and within the financial ability of the companies. The studies submitted to the joint board by the New York Central & Hudson River Railroad Company for the electrification of certain portions of the Boston & Albany Railroad also indicate feasibility within a cost far from prohibitive.

"We are convinced that the public wefare demands some legislation with respect to electrification. While we are not in favor of legislation compelling the electrification of all steam railroads of standard gauge in the Metropolitan District before a date now to be fixed, we do not believe that leaving the matter in the hands of the several rairoad companies exclusively will result in as speedy action as will follow some legislative requirement plainly indicating the policy of the State. Experience plainly has shown that similar legislation as to automatic car couplers, fenders and vestibules for street cars, the prohibition of car stoves and the like has been found in the public interest and has accomplished good results.

"We are of opinion that any legislation should secure to the railroad companies the greatest latitude with respect to lines first to be electrified, but that the time for commencing the actual work of construction for electrical operation should be fixed at a reasonable date by the General Court or some public agency designed by it, with authority to such agency to extend the time for good cause shown."

It will be noted that although mandatory legislation is recommended it is for portions of the lines and not for complete nor entire electrification.

The second minority report was signed by two members and reads as follows:

"The undersigned dissent from so much of the report as relates to electrification, but are unable to join in the above statement of the views of the minority for the reason set forth below. We are unwilling to give our assent to all the arguments, inferences, and statements set forth in the majority report, and we believe that its whole tendency is unduly to discourage and postpone electrification, even by the voluntary action of the railroad companies. In our opinion, continued study of the subject under legislative authority and reports to some public authority setting forth progress made will tend to advance electrification and to promote agreement upon and adoption of that system of electrical operation best adapted for general use and for facilitating interchange of traffic between different systems. We, therefore, believe that legislation should be enacted directing some public board to prosceute further investigations and make report to the Legislature and requiring the railroad companies, under the supervision of such board, to make further studies with plans and estimates not confined within the arbitrary limits of the metropolitan district and including freight as well as passenger traffic. We think that it should be left to such board to recommend compulsory legislation if and when it is found to be called for.

"We are not, however, convinced of the advisability at the present time of any legislation requiring electrification. The fixing of the time within which the work of construction for electrical operation must be begun by all railroads within the Metropolitan District, even though some public authority is given the power of extending such time for good cause shown, seems to us to be compulsory legislation, the wisdom and necessity of which are yet to be demonstrated. However strong the desire of the public may be that all railroads within the Metropolitan District should be electrified, we doubt whether the problem has yet reached the stage where any form of compulsory legislation is warranted by the facts shown or will really expedite an intelligent and comprehensive settlement of the question. We also believe that the effect of the great expense of electrification in justifying or requiring an increase in rates or fare within the Metropolitan District should be more fully considered before any form of compulsory legislation is recommended."

If the minority is generally more nearly in the right, as has been said, then the minority of the minority has the best view of the situation, and I leave that point for your judgment.

If the Chicago situation were to be reviewed by a commission of proper talent, engineering knowledge, financial ability, and a modicum of horse sense, I am persuaded that a very illuminating report might be produced. It might not be fully in accord with the ideas of some of the ladies, but they do not as a rule pay the bills.

Following, I quote some portions of the reports of the roads in connection with their estimates. V. P. Wilgus of the New Haven says,

"The problem in its general nature is altogether different from the conditions at New York, as in the latter case the entire traffic of the New York, New Haven & Hartford Railroad and the New York Central Railroad companies within the city limits is concentrated upon a single four-track route

between the Grand Central Terminal and Woodlawn, while, on the contrary, at Boston the suburban business is diffused over a great area requiring the equipment for electric operation of not less than 20 through routes and branches, with a corresponding effect upon first cost and operating charges.

"Notwithstanding the more favorable conditions at New York incident to the greater density of traffic and the simpler track system in the region served by the New Haven and New York Central Railroads, the records of the New Haven Company demonstrate that under present conditions the electric train service not only fails to earn any interest upon the very large amount of capital invested, but that it has also increased the cost of operation, and with the less favorable conditions in the vicinity of Boston it is impossible to escape the conclusion that the deficit in fixed charges and operating expenses will be still greater."

He goes on to prove that more economical operation can be obtained by combining freight and passenger movement, but says in this connection:

"The extension of the estimates to include the much larger expenditures required to cover the inclusion of freight service and yard switching, together with the probable enlargement of the limits of the electric zone, is not possible at this time, as the data for such estimates are not at present available, but it is certain that the revised and completed totals will be of the most imposing magnitude.

"In general it would seem altogether more practical at first to restrict the substitution of electricity for steam to a few of the more important routes, subsequently extending the system as rapidly as consistent with the financial conditions and the public needs."

Vice President A. H. Smith of the Boston & Albany accompanies his report with the following:

"The Gross revenue derived by the Boston & Albany Railroad in the district under consideration for electrification, including return tickets, single trip tickets, mileage proportion for traffic entering and leaving Boston for points west of South Framingham, is approximately $1,300,000.

"The visible operating expense of affording this service under steam operation at the present time, without any interest whatever upon the large investment for right-of-way, tracks and structures, is slightly in excess of the gross receipts.

"If to this present deficit there be added the above additional annual expense as result of electrification, namely $539,191, the net revenue above operating expenses which accrues to the Boston & Albany Railroad as a whole from the business handled in and out of the City of Boston between all points on the road will be practically absorbed, thus leaving no net revenue from such service to meet existing obligations or those which would be created by this new investment.

"The solvency of a transportation company is of paramount importance to the public as well as to the railroad. Insolvency necessarily means inefficient service, and inefficient service means inconvenience and commercial and industrial calamity to the public.

"It would, therefore, seem imperative that any act providing for the electrification of steam railroads under such circumstances, empowering the proper board or boards to determine the manner in which such work should be prosecuted, should also empower the board or other properly constituted authorities to permit the railroad companies to assess all passengers and traffic using the facilities with a terminal charge sufficient to bear the financial burdens imposed, with some addition profit to the operating company for performing the service and assuming the additional responsibilities and liabilities necessarily introduced. This would seem more consistent and equitable than to impose it upon other cities, villages or rural communities in local fares or other forms of transportation which receive no real estate or other benefits from the new form of transportation employed.

"The Boston & Albany Railroad has no material source of income except the receipts from transportation afforded the public. If the public elects through legislative mandate to have that service provided through the use of more costly appliances and methods than formerly, the conclusion is inevitable that the public must ultimately pay the cost and should therefore have full information on the subject in advance. The case is analogous to the elimination of grade crossings, where the public participates in the immediate costs and assumes in transportation expenses the carrying charges on the remainder."

There has been some criticisms of the railway company estimates of the costs at Boston:

One is the expenditures for power houses and that current could be purchased and reduce the capital account by several millions expense for power houses and their equipment. It is apparently overlooked that some service must supply the capital which will produce current and the cost to the user would include charges for the use of that capital, so that there would be no ultimate saving and the railroad company would not have the same degree of assurance or control of the facilities as if they had their own. This includes arrangement for duplicate machinery to use in case of accident or failure, also to be able to take advantage of latest developments or improvements in machinery or processes.

On the other hand, local conditions might offer facilities that should receive consideration. One could hardly justify twenty odd power houses for the railway systems of Chicago in case they were to electrify.

Another point was the number of cars and locomotives included in the estimate to replace steam equipment. The railroads at interest no doubt would have better information as to their probable requirements than outsiders who in the very nature of things could not have the same experience.

Another point was the doubtful value of steam equipment released. I quote from the railway company report on this point:

"The electrification of the Boston suburban district would release a large number of steam engines and passenger coaches, which should properly be credited to the construction estimate, but, as there is no apparent opportunity for the utilization of so large an amount of equipment of this special type, and as its value for resale would be so doubtful, it is not practicable to assign values to this item."

The popular mind has been led to believe that there are large economies in electrification of railroads and savings can be made in fuel and locomotive maintenance. A recent paper by Mr. F. Darlington, chief engineer of the railway department of the Westinghouse Electric & Mfg. Co., read to the Canadian Railway Club analyses the generation and distribution of electric power in a most enlightening way.

His argument in brief is that in most cases the load factor is too low. He defines load factor to be the ratio between the average load and the maximum or peak load. The load factor of the principal plants generatig railroad power is between 20 and 35 per cent, or, in other words, their average work is about one-quarter of the total capacity, and, as the fixed charges are necessarily based on the complete plant and maximum output, it places a heavy burden on the actual production.

He also calls attention to the size of the plant as influencing the cost of production per unit. For instance, the cost of operating labor of a 600 kilowatt plant runs about .75c per kilowatt hour, while in a 6,000 kilowatt plant it falls to

30c. If the output is again multiplied ten times and with a good load factor, the cost will drop to about .075c per kilowatt hour.

The same is true of fuel, the big plants giving an economy of 1 to 2 or even 1 to 3, as compared with small ones. His conclusion is that, unless railroad electrical power can be generated in very large plants and with a good load factor, the results will not be economical. He suggests a combination service, doing other work as can be arranged for at times when railroad power demands do not call for all the capacity in order to better the load factor. He also calls attention to the short runs in all cases thus far of railroad electrification, which not only cuts down the load factor, but makes a disproportionately expensive system for a few miles as compared with what the cost would be if the steam locomotive were allowed to finish the run. The following paragraph from Mr. Darlington's paper very well expresses the situation:

"Much valuable practical experience in the cost of heavy trunk line operation by electric power has been gained from American railroads, but it is manifestly unreasonable to expect them to show economy of operation and pay fixed charges on the investment. Take, for example, the New York terminals of the N. Y., N. H. & H. R. R., or the N. Y. C. & H. R. R. R., and suppose that, instead of electrification of their terminals, an improved steam locomotive, which was smokeless and more economical than the main line locomotives, have been used within the limits of the present electrified zone. Under such circumstances, even if the improved locomotives had been better than the outside main line locomotives, had been used within the limits of the present electrified zone, the cost of providing new locomotives and changing the motive power on all trains entering the zone would have been a heavy additional expense sufficient to more than offset a large superiority in the terminal locomotives. The failure of electrification to show a profit under such conditions is not an indication of poor economy of electrical operation, but is due to very unfavorable and costly operating conditions for any kind of motive power. It is well known that some conditions are much more favorable to electric traction, in comparison with steam operation, than others, but none of the practical applications to trunk line operation in America have been such as to realize the conditions that are most favorable for superior economy by electric power. It is fairly established by practice that operation of heavy trains by electric power saves large sums in locomotive repairs and approximately one-half of the fuel as compared with steam locomotive operation. Fuel saving by electric operation is only realized to the best advantage where electric power for railroads is put out from generating stations working at good load factors; and, as already explained, this is only realized to the fullest extent from a diversity of service and large generating stations."

This expression from one who is so close to the situation, particularly from that of the builder of electrical equipment is deserving of fullest consideration.

In conclusion I would say that the events of the past sixteen months, since my former paper was written, confirm rather than qualify the conclusions which were there stated. That paper was admirably supported by a very considerable discussion, and I trust that the additional information here presented may be of value and interest.

MACHINE EQUIPMENT IN HUNTINGTON SHOPS, CHESAPEAKE & OHIO RY.

It was intended to publish the following list of machine equipment in connection with the description of the shops of the Chesapeake & Ohio Ry. at Huntington, W. Va, which appeared in the March edition of the Railway Master Mechanic. Owing to lack of space, however, it was omitted. We are indebted to Mr. J. F. Walsh, general superintendent of motive power, for the data.—Editor.

Machine Shop.

1 single axle lathe, Niles Tool Works, Hamilton, O.
1 54 in. x 14-ft. planer, Betts Machine Co, Wilmington, Del.
2 2x24-in. turret lathes, Jones & Lamson Mach. Co., Springfield, Vt.
1 8-ft. vertical boring mill, Betts Machine Co., Wilmington, Del.
1 6-ft. Universal radial drill, Niles Tool Works, Hamilton, Ohio.
1 15-in. slotter, Niles-Bement-Pond Co., Philadelphia, Pa.
1 Universal milling machine, No. 3 LeBlond, Universal Milling Machine Co, Cincinnati, O.
1 30x12-in. engine lathe, Lodge & Shipley Co., Cincinnati, O.
2 sensitive drill presses, Hill, Clark & Co. (Inc.) Machine Tool Co., Boston, Mass.
1 Universal grinder, No. 3, Landis Universal Grinding Machine Co., Waynesburg, Pa.
1 24-in. shaper, American Tool Works Co, Cincinnati, O.
1 guide grinder, Springfield Manufacturing Co., Bridgeport, Conn.
1 18 in. x 6-ft. brass lathe, Schumacher-Boyce & Ennis, Cincinnati, O.
1 centering machine, D. E. Whitten Machine Co., New London, Conn.
1 link grinder, H. G Hammett Machine Co., Troy, N. Y.
1 44 in. x 14-ft. planer, Niles-Bement-Pond Works, Plainfield, N. J.
2 24 in. x 12 in. engine lathes, Lodge & Shipley Machine Co., Cincinnati, Ohio.
2 18 in. x 12 in. engine lathes, Lodge & Shipley Machine Co., Cincinnati, Ohio.
1 1⅛ in. triple bolt cutter, Detrick & Harvey Company, Baltimore, Md.
1 piston rod grinder, Landis Machine Co., Waynesburg, Pa.
1 18 in. tool room lathe, Lodge & Shipley Machine Tool Co., Cincinnati, Ohio.
1 42 in. vertical boring mill, Bullard Machine Tool Co., Bridgeport, Conn.
1 oil separator, American Tool & Mch. Co., Boston, Mass.
2 portable cranes, Franklin Railway Supply Co., Franklin, Pa.
1 35 h. p. motor, General Electric Co.

Blacksmith Shop (Locomotive).

1 double punch and shear, Covington Machine Co., Covington, Virginia.
1 No. 11 Sturtevant blower, Buffalo Forge Company, Buffalo, N. Y.
1 No. X 1 in. triple bolt cutter, Detrick & Harvey, Baltimore, Md.
1 2 in. double bolt cutter, Detrick & Harvey, Baltimore, Md.
1 1 in. heading and forging machine, Acme Mfg. Co., Cleveland, O.
1 1½ in. heading and forging machine, Acme Mfg. Co., Cleveland, O.
1 4 in. heading and forging machine, Acme Mfg. Co., Cleveland, O.
1 5,000-lb. double frame steam hammer, Niles, Bement Pond Co., Philadelphia, Pa.
1 2,000-lb. single frame steam hammer, Niles, Bement Pond Co., Philadelphia, Pa.
1 1,100-lb. single frame steam hammer, Niles, Bement Pond Co., Philadelphia, Pa.
1 1,600-lb. open frame steam hammer, Niles, Bement Pond Co., Philadelphia, Pa.
3 jib cranes, Yale & Towne Mfg. Co., Stanford, Conn.

1 No. 1 Ferguson furnace, Railway Materials Sup. Co., Chicago, Ill.
2 No. 3 Ferguson furnace, Railway Materials Sup. Co., Chicago, Ill.
1 No. 4 Ferguson furnace, Railway Materials Sup. Co., Chicago, Ill.
1 No. 5 Ferguson furnace, Railway Materials Sup. Co., Chicago, Ill.
2 2 ft. 10 in. x 4 ft. 4 in. Ferguson furnace, Railway Materials Sup. Co., Chicago, Ill.
1 case hardening furnace, Railway Materials Sup. Co., Chicago, Ill.
12 forges with air ducts, Richmond Loco. Works, Richmond, Virginia.
2 cast iron forges, Richmond Loco. Works, Richmond, Va.
1 5 ft. x 8 ft. Ferguson furnace, Railway Materials Sup. Co., Chicago, Ill.
12 anvils.

Brass Foundry.

1 Berkshire molding machine, flask and pattern plates, Berkshire Mfg. Co., Cleveland, O.
1 No. 3 Rockwell furnace, Rockwell Furnace Co., Jersey City, N. J.
1 open ladle heater, Rockwell Furnace Co., Jersey City, N. J.
1 26 x 48 tumbling barrel, (maker unknown).
1 wire cutter, F. B. Shuster Co., New Haven, Conn.
1 Dings magnetic separator, E. W. Bliss Co.

Boiler Shop.

1 portable pneumatic riveter, Fairbanks Company, New York.
2 60 in. throat punch and shear, Cleveland Punch & Shear Wks., Cleveland, O.
1 comb. punch and riveter, Fairbanks Company, New York.
1 rotary bevel shear, Lenox No. 3, Jos. T. Ryerson Co., Chicago.
1 walking gib crane, Whiting Fdy. & Mch. Company, Chicago.
1 6 spindle flue sheet drill, Foote Burt Co., Cleveland, O.
1 Lassiter staybolt cutter, Modern Tool Co., Erie, Paa.
1 Lassiter staybolt drill, Modern Tool Co., Erie, Pa.
1 Lowe staybolt breaker, William White & Co., Moline, Ill.
1 horizontal flange punch, Long & Alstatter, Hamilton, O.
1 die grinder, Modern Tool Co., Erie, Pa.
1 Ferguson furnace, Railway Materials Company, Chicago.
1 hydraulic flange press, R. D. Wood Company, Philadelphia.
1 accumulator and pump, R. D. Wood Company, Philadelphia.

Tin Shop.

1 Cornish brake, The Peck, Stow & Wilcox Co., Cleveland, O.
1 rotary shear, The Peck, Stow & Wilcox Co., Cleveland, O.
1 circular shear, Niagara Machine & Tool Co., Buffalo, N. Y.
1 grooving machine, Niagara Machine & Tool Co., Buffalo, N. Y.
2 hollow mangrel stakes, Niagara Machine & Tool Co., Buffalo, N. Y.

Planing Mill.

1 large vertical cut-off saw and gainer, No. 8, J. A. Fay & Egan Co., Cincinnati, O.
1 No. 3 self-feeding large rip saw, J. A. Fay & Egan Co., Cincinnati, O.

Pipe Shop.

1 new Armstrong pipe machine, power driven, Manning-Maxwell & Moore, New York.
1 triple valve test rack, Westinghouse Air Brake Co., Wilmerding, Pa.

Blacksmith Shop (Freight Car).

1 16 h. p. steam hammer, Niles-Bement Pond Co., Philadelphia, Pa.
1 No. 6 bending and forging machine, Long & Alstatter Co., Hamilton, O.
1 1 in. rivet and forging machine, Acme Mch. Co., Cleveland, O.
1 No. 9 Williams & White bulldozer, Williams & White, Moline, Ill.
1 double bulldozer Ferguson furnace, Railway Materials Co., Chicago, Ill.
1 No. 3 forging Ferguson furnace, Railway Materials Co., Chicago, Ill.
1 single bulldozer Ferguson furnace, Railway Materials Co., Chicago, Ill.
1 steel car Ferguson furnace, Railway Materials Co., Chicago, Ill.
1 No. 1 Ferguson furnace, Railway Materials Co., Chicago, Ill.
1 No. 7 Sturtevant blower, Acme Machine Co., Cleveland, O.
1 Buffalo cupola blower, Buffalo Forge Company, Buffalo, N. Y.
1 eye bolt machine.

MIKADO TYPE LOCOMOTIVE, CHICAGO, BURLINGTON & QUINCY RAILROAD.

The Chicago, Burlington & Quincy R. R. has recently received from the Baldwin Locomotive Works fifty Mikado type locomotives, which are among the heaviest eight-coupled engines thus far constructed. Full advantage has been taken, in this design, of the opportunity to secure increased boiler capacity by using a wide and deep firebox, which is placed back of the driving wheels. This arrangement requires the use of a long boiler barrel, and the tubes have a length of 21 feet over the tube-sheets. The design thus bears the same relation to the Consolidation type, that the Prairie type does to the Mogul; that is, the boiler power is increased in proportion to the tractive force developed. As, other things being equal, the boiler power limits the speed at which a given tractive force can be maintained, the superiority of the Mikado type for service where speed is an important factor, is clearly indicated. This wheel arrangement can also be used to advantage where the quality of fuel burned requires a deeper furnace than can conveniently be placed above the driving wheels of a Consolidation engine.

The locomotives now under notice have driving wheels 64 inches in diameter, this being the largest sized wheel thus far applied by the builders to an eight-coupled engine. The rigid wheel-base is 16 feet 9 inches, and the total wheel-base 33 feet 9½ inches. The trucks have sufficient swing to enable the locomotive to traverse 20-degree curves. Superheated steam is used at moderate pressure, and the tractive force exerted is 49,300 pounds. With 205,600 pounds on the driving wheels, the ratio of adhesion is thus 4.17.

The boiler is designed for a pressure of 200 pounds, but in service the safety-valves are set at 170 pounds. The barrel is composed of three rings, the first of which is tapered. The diameter at the front end is 78 inches, and at the third ring 85 inches. The longitudinal seams have "diamond" welt strips. In accordance with the railroad company's practice, the side water legs of the firebox taper in width from 6 inches at the front to 4 inches at the back. The throat is sloped; the back head is vertical to a point immediately over the fire-door opening, above which it is inclined forward. A brick arch is used, and it is supported on angle irons which are studded to the side sheets.

The superheater is of the Emerson fire-tube type, and provides 845 square feet of superheating surface. The superheater pipes are 1⅝ inches in diameter, and they are placed in 24 5½-inch tubes. An equalizing pipe cross-connects the live steam passages in the cylinder saddle.

The steam distribution is controlled by 14-inch piston valves. The valve heads are separate from the body; the packing rings are L-shaped, and are carried on bull rings. Each valve stem is secured to a long cross-head, which slides in a bracket bolted to the upper guide-bar. The

Walschaerts valve gear is used, and the combining levers are pinned directly to the above-mentioned cross-heads. The cylinders are provided with vacuum relief valves, which are tapped into the live steam passages. The by-pass valves are of the flat plate type, and arep laced above the steam chests.

The equalization system in this locomotive is divided between the second and third pairs of driving wheels. The front truck has a cast steel frame and bolster, with three-point suspension links of the same material, while the rear truck is of the Hodges type with outside journals. The spring saddles and equalizing beams are of cast steel.

In accordance with the regular practice of the builders, the frames have double front rails and separate rear sections. The main frames are of cast steel, and measure 5 inches in width. They are braced transversely by the guide yoke; by the steam valve-motion bearer, back of the second pair of drivers; by a broad steel casting between the main and rear drivers; and by the furnace bearer crosstie, also of cast steel, which spans the frames at the point where the main and rear sections are spliced. At this same point, the frames are supported by the back equalizing-beam fulcrums. The lower frame rails are braced transversely between each adjacent pair of driving axles. Further bracing is provided by cast steel deck plates front and back.

Details of dimensions, weights, etc., are given in the following tables:

Gauge	4 ft. 8½ in.
Cylinders	27 in. x 30 in.
Valves	Balanced piston

Boiler.

Type	Wagon top
Material	Steel
Diameter	78 in.
Thickness of sheets	¾ in. and 13-16 in.
Working Pressure	170 lbs.
Fuel	Soft coal
Staying	Radial

Fire Box.

Material	Steel
Length	108⅛ in.
Width	72¼ in.
Depth, front	84 in.
Depth, back	73 in.
Thickness of sheets, sides	⅜ in.
Thickness of sheets, back	⅜ in.
Thickness of sheets, crown	⅜ in.
Thickness of sheets, tube	½ in.

Water Space.

Front	6 in.
Sides	6 to 4 in.
Back	4 in.

Tubes.

Diameter	5½ and 2¼ in.
Material	Iron
Thickness	5½ in., No. 8 W. G.
Thickness	2¼ in., No. 11 W. G.
Number	5½ in., 24; 2¼ in., 221
Length	21 ft. 0 in.

Heating Surface.

Firebox	215 sq. ft.
Tubes	3,444 sq. ft.
Total	3,659 sq. ft.
Grate Area	54.2 sq. ft.

Driving Wheels.

Diameter, outside	64 in.
Diameter, center	56 in.
Journals, main	11x12 in.
Journals, others	10x12 in.

Engine Truck Wheels.

Diameter, front	37¼ in.
Journals	6x10 in.
Diameter, back	42½ in.
Journals	8x14 in.

Wheel Base.

Driving	16 ft. 9 in.

Baldwin Mikado Type Locomotive, C., B. & Q. R. R.

The driving wheel centers and boxes are of cast steel, and the boxes work in bronze shoes and wedges. The wheel centers have bronze hub-liners. The driving tires are 4 inches thick and are all flanged. The cross-heads have cast steel bodies and cast iron gibs, with babbited wearing surfaces; while the guides are of hammered steel, supported by cast steel bearers.

Castle nuts are used on all the moving parts of this locomotive, also on the guides, engine truck equalizers and spring hangers, pedestal binders, and tender trucks.

The tender frame is composed of 12-inch channels, with front bumper of oak and back bumper of steel, built up. The trucks are of the arch-bar type, with cast iron wheels having reinforced flanges. The sloping floor of the fuel space is hinged at the bottom, and can be raised by a steam cylinder, thus pushing the coal forward to the fireman. A system of piping is installed by which the air-pump exhaust can be discharged into the tank, in order to heat the feed-water.

These engines are the first of their type constructed by the builders for this road, and in weight and capacity exceed any single-expansion locomotives heretofore placed on the system. The design follows Burlington practice closely, and detail parts interchangeable with those on existing engines have, where practicable, been applied to the new locomotives.

Rigid	16 ft. 9 in.
Total engine	33 ft. 9½ in.
Total engine and tender	65 ft. 11¾ in.

Weight.

On driving wheels	205,600 lbs.
On truck, front	29,000 lbs.
On truck, back	35,000 lbs.
Total engine	269,600 lbs.
Total engine and tender, about	430,000 lbs.

Tender.

Wheels, number	8
Wheels, diameter	33 in.
Journals	5½x10 in.
Tank capacity	8,200 lbs.
Fuel capacity	13 tons
Service	Freight

Engine equipped with superheater.
Superheating surface, 845 square feet.

CAR STENCILING.

A method of stenciling freight car tare weights which seems to be the means for a considerable saving has been devised by F. C. Maegly, assistant general freight agent of the Atchison, Topeka & Santa Fe Ry. The system has been placed in service on the Santa Fe where it operates with success.

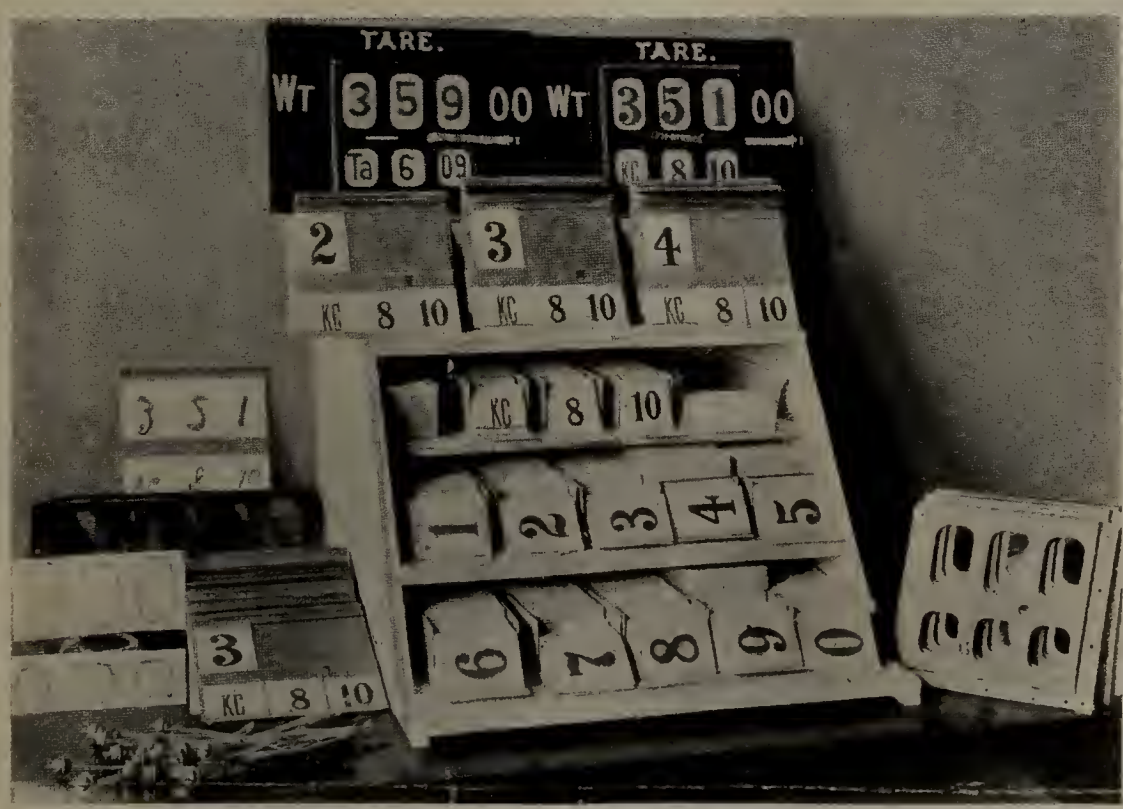

Weighers Outfit for Stenciling Freight Cars.

Tare Weight Indicator as Applied to Car.

The tare weight indicator does away with paint and stencils, relieves the mechanical department of an irregular, inconvenient and expensive service and enables the authorized weigher himself to correct the tare weight on cars before they leave the scale or while in the immediate vicinity of the scale. It avoids all the switching between the scale and the paint track, also all delays to equipment incident to the painting out of the old tare weight marks and the restenciling of the new ones. The invention is very simple and inexpensive, as evidenced by the accompanying illustrations.

One of the illustrations shows a metal rack nailed, riveted or bolted on each side of the car and having openings or windows through which the tare weight cards show.

The other illustration shows, at the extreme right, an interchangeable metal filler or cardholder, fitting in and secured to the rack by means of a car seal. In the center is seen a supply of cards having printed thereon the figures 1 to 0, representing the tare weight digits, and, just above, 1 to 12, representing the number of the current month and year; KC, LA, SF, etc., representing the station abbreviation or symbol, and having printed thereon in smaller type the full name of the weighing station and also the means of showing whether the car was wet or dry when light weighed.

The cards, made of treated fiber board, are light, and, in the limited space of 12½x12½x12½ inches in the weigher's working outfit, there are a sufficient number of these cards to equip more than five hundred cars with their corrected tare weight marks, at a cost averaging about one cent to the car. Metal signs may be substituted later on, but it is confidently believed that the treated board cards will prove sufficiently lasting. Four styles of cards are being experimented with, namely: Cards not treated; cards dipped in shellac or varnish; cards paraffined; cards made of metal. The intention is to use as standard the cheapest quality that is sufficiently lasting.

The weighing station may guard against temporary shortage of printed cards by substituting cards as shown at the left of the larger illustration, on which the weigher writes the new tare weight, station symbol and date, in the spaces provided therefor, using waterproof carbon pencil.

On a large proportion of Santa Fe System freight cars the rack shown in the smaller illustration may be applied directly over and hiding the first three figures of the old stenciled weight, thus avoiding the necessity of painting out the old tare weight marks. But on a limited number of the cars other locations are preferable, either for the convenience of the weigher or for drainage, in which event the old tare weight marks must be painted out at the time the rack is applied. For this purpose some of the racks built have wider vertical flanges with the "Wt. ....00" stenciled thereon. On these the entire space across the bottom is left open to provide for the most complete drainage.

The weigher may change the marked tares while the cars are on the scale, or he may wait until he finishes weighing all the empties in the drag, immediately thereafter setting up the corrected tares and making substitution thereof for the old tares. The latter plan is recommended where drags of from ten to twenty cars are light weighed at a time and the switching crew has other pressing work to

do. The switching crew would thus have at its disposal, say, ten minutes on a ten-car drag, which it could utilize in attending to other work while the weigher was occupied correcting the tares on the cars just weighed. By either method the entire service of weighing and correcting the tares and releasing the cars is accomplished at the rate of one car every two minutes.

To expedite matters the weigher keeps at the scale or any other convenient place a supply of exchange fillers. In these he sets up the known factors of the forthcoming tare, namely, station symbol, date, year and the first tare weight figure, so that, on the arrival of the switching crew, the car is weighed and only two remaining digits have to be put in place in each filler, over the extra carbon leaf of the original scale ticket.

CALCULATING FOUNDATION BRAKE DETAILS.

By Edwin G. Chenoweth.
Mechanical Engineer, Erie Railroad.

In calculating the stresses in brake levers, brake rods and pins, the writer has found it very helpful to have a table which will give the width of beams, the thickness being assumed, when the pull on rods at either end of lever is known and the distance from the end holes in lever to the middle hole or to a hole located anywhere between the two, is known and a table from which the diameter of brake rod and pin can be taken when pull on rod is known. Three thicknesses of lever, ¾", 1" and 1¼" will cover all practical conditions.

The width of the brake lever in which the maximum fibre stress does not exceed 23,000 pounds per square inch, is readily taken from the following tables without the long and tedious calculation when the moment of inertia must be calculated and allowance made for middle pin hole at which point the maximum stress always comes. The stress per square inch in outer fibre referred to above is the recommended figure and adopted by the Master Car Builders' Association. The table gives the width of beams so that stress in outer fibre will vary only between 20,000 to 23,000 pounds.

The formula for all brake beam widths is:

$$N=\frac{\sqrt{Mm}}{c}+\tfrac{1}{4}''.$$

derived as follows:

Let Mm = Maximum moment, or the product of the pull on brake rod in pounds, by the distance in inches from center of brake pin to the center of fulcrum pin.

S = Stress per square inch in outer fiber.

$I = \text{Moment of inertia} = \frac{bh^3}{12}$

e = Maximum distance from center of gravity of section to outer fiber, or $\frac{h}{2}$

N = Width of lever.

b = Thickness of lever.

d = Diameter of pin hole. Not to exceed 1½".

C = Constant which equals:

3000 for levers ¾" thick.
4000 for levers 1" thick.
5000 for levers 1¼" thick.

P = Pull of either brake rod attached to end of lever.

L = Lever arm, or distance from center of pin hole at end of lever to center of fulcrum pin hole.

It was found by trial that, if 24,000 lbs. was substituted for S and add ¼" to the derived formula, it would reduce S to less than 23,000; also compensate for 1½" diameter of pinhole. Then for lever 1" thick:

$$PL=Mm=SI=\frac{24000bh^3}{e}=\frac{2000bh^3}{12e}=\frac{2000bh^3}{e}=$$

$$\frac{2000h^3 3}{4e}=\frac{6000h^3}{h\times 4}=\frac{6000h_3}{2h}=\frac{3000h^2}{2}$$

$$\frac{2000h^3}{h}=4000h^2.$$

$$\frac{h}{2}$$

$$\text{Then } h^2=\frac{Mm}{4000} \text{ or } h=\sqrt{\frac{Mm}{4000}}+\tfrac{1}{4}''.$$

For levers ¾" thick:

$$PL=Mm=SI=\frac{24000bh^3}{e}=\frac{2000bh^3}{12e}=\frac{2000bh^3}{e}=$$

$$\frac{2000h^3 5}{4e}=\frac{10000h^3}{4e}=\frac{10000h^3}{4\times\frac{h}{2}}=$$

$$\frac{10000h^3}{2h}=5000h^2.$$

$$\text{Then } h^2=\frac{Mm}{3000} \text{ or } h=\sqrt{\frac{Mm}{3000}}+\tfrac{1}{4}''.$$

For levers 1¼" thick:

$$PL=Mm=SI=\frac{24000bh^3}{e}=\frac{2000bh^3}{12e}=\frac{2000bh^3}{e}=$$

$$\frac{2000h^3 5}{4e}=\frac{10000h^3}{4e}=\frac{10000h^3}{4\times\frac{h}{2}}=$$

$$\frac{10000h^3}{2h}=5000h^2.$$

$$\text{Then } h^2=\frac{Mm}{5000} \text{ or } h=\sqrt{\frac{Mm}{5000}}+\tfrac{1}{4}''.$$

Figure No. 1 shows brake lever on which is shown the symbols as referred to above.

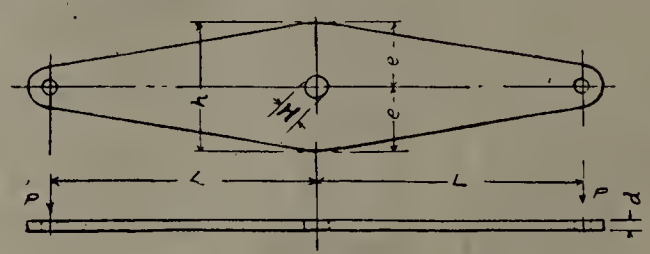

Fig. 1.

TABLE A—For Brake Levers 3-4 Inch Thick

Table Giving Width (h) of Brake Levers ¾ Inch Thick Corresponding to the Maximum Moment, Mm. Allowance Made for Pin Hole 1¼" Diameter, Stress in Outer Fiber from 20,000 to 23,000 Pounds per Square Inch.

Mm	h	Mm	h	Mm	h	Mm	h
6000	1¾"	48000	4¼"	114000	6⅜"	234000	9⅛"
7500	1⅞"	51000	4⅜"	117000	6½"	240000	9¼"
9000	2 "	54000	4½"	120000	6⅝"	246000	9¼"
10500	2⅛"	57000	4⅝"	123000	6¾"	252000	9⅜"
12000	2¼"	60000	4¾"	126000	6¾"	258000	9½"
13500	2⅜"	63000	4⅞"	132000	6⅞"	264000	9⅝"
15000	2½"	66000	4⅞"	138000	7 "	270000	9¾"
16500	2⅝"	69000	5 "	144000	7⅛"	276000	9⅞"
18000	2¾"	72000	5⅛"	150000	7¼"	282000	10 "
19500	2¾"	75000	5¼"	156000	7½"	288000	10⅛"
21000	2⅞"	78000	5⅜"	162000	7⅝"	294000	10¼"
22500	3 "	81000	5⅜"	168000	7¾"	300000	10¼"
24000	3⅛"	84000	5½"	174000	7⅞"		
25500	3⅛"	87000	5⅝"	180000	8 "		
27000	3¼"	90000	5¾"	186000	8⅛"		
28500	3½"	93000	5⅞"	192000	8¼"		
30000	3½"	96000	5⅞"	198000	8⅜"		
33000	3⅝"	99000	6 "	204000	8½"		
36000	3¾"	102000	6⅛"	210000	8⅝"		
39000	3⅞"	105000	6¼"	216000	8¾"		
42000	4 "	108000	6¼"	222000	8⅞"		
45000	4⅛"	111000	6⅜"	228000	9 "		

It is recommended that, instead of increasing the width (h) of lever over 8½" the thickness (d) should be increased.

The following example shows how the width of Levers is obtained from the tables:

Assume that lever is 1 inch thick.
The Pull (p) on Brake Rod is 1,800 pounds.
The Length (L) equals 24 inches long.
Then, Mm=1800×24=43200.
The nearest width of lever (h) corresponding to this Mm is 3⅝".

It is recommended in this connection that the width of lever vary in ¼ of an inch, this to decrease the number of different widths that it is necessary to carry in stock.

In figuring the leverage in order to get the pull which the levers must sustain, it is correct to assume that, when brakes are applied, the total system is in equilibrium, and therefore each lever in the system is in equilibrium. Taking as a simple example: A lever with rods connected at the end of lever pulling in same direction with a fulcrum consisting of a brake rod connection pull in opposite direction: Then, if the fulcrum connection is half-way between the two end brake rod connections, the pull of the two rods will be equal in order to keep the lever in equilibrium, or P x L at one end of lever, equals P x L at other end. Now, if L at one end in longer than at the other end, the pull (p) must also be different, for P x L for one end must equal P x L for the other end; therefore, inasmuch as the products are equal, it will at once be noted that the pull on either end rod can be multiplied by its length from fulcrum point, and the product equals "Mm" in the table.

In getting the value of Mm, the starting point, of course, should be at the brake cylinder, and the pressure taken should be the greatest which can be gotten with the type of brake under consideration.

The maximum pressures per square inch in brake cylinder for different types of equipment can be used as follows:

Westinghouse Air Brakes—	Driver	Tender	Engine Truck	Cars
Ordinary low pressure brake.....	50	60	50	60
High speed brakes.....	85	85	85	85
E. T. Equipment.....	93	93	93	
L. N. Equipment.....				104

TABLE B—For Brake Levers 1 Inch Thick

Table Giving Width (n) of Brake Levers 1 inch thick Corresponding to the Maximum Moment Mm. Allowance made for Pin Hole 1½" diameter. Stress in Outer Fiber from 20,000 to 23,000 Pounds per Square Inch.

Mm	h	Mm	h	Mm	h	Mm	h
4000	1¼"	56000	4 "	144000	6¼"	264000	8⅜"
6000	1½"	60000	4⅛"	148000	6⅜"	272000	8½"
8000	1¾"	64000	4¼"	152000	6⅜"	280000	8⅝"
10000	1⅞"	68000	4⅜"	156000	6½"	288000	8¾"
12000	2 "	72000	4½"	160000	6⅝"	296000	8⅞"
14000	2⅛"	76000	4⅝"	164000	6¾"	304000	9 "
16000	2¼"	80000	4¾"	168000	6¾"	312000	9⅛"
18000	2⅜"	84000	4⅞"	172000	6⅞"	320000	9¼"
20000	2½"	88000	5 "	176000	6⅞"	328000	9⅜"
22000	2⅝"	92000	5⅛"	180000	7 "	336000	9½"
24000	2¾"	96000	5¼"	184000	7 "	344000	9⅝"
26000	2¾"	100000	5¼"	188000	7⅛"	352000	9¾"
28000	2⅞"	104000	5⅜"	192000	7¼"	360000	9⅞"
30000	3 "	108000	5½"	196000	7¼"	368000	10 "
32000	3⅛"	112000	5⅝"	200000	7⅜"		
34000	3¼"	116000	5¾"	208000	7½"		
36000	3¼"	120000	5¾"	216000	7⅝"		
38000	3⅜"	124000	5⅞"	224000	7¾"		
40000	3½"	128000	5⅞"	232000	7⅞"		
44000	3⅝"	132000	6 "	240000	8 "		
48000	3¾"	136000	6⅛"	248000	8⅛"		
52000	3⅞"	140000	6¼"	256000	8¼"		

TABLE C—For Brake Levers 1 1-4 Inch Thick

Table Giving Width (h) of Brake Levers 1¼" Thick Corresponding to the Maximum Moment (Mm). Allowance made for Pin Hole 1½" Diameter. Stress in Outer Fiber from 20,000 to 23,000 Pounds per Square Inch.

Mm	h	Mm	h	Mm	h	Mm	h
50000	3½"	160000	5⅞"				
55000	3⅝"	165000	6 "	340000	8½"		
60000	3¾"	170000	6⅛"	350000	8⅝"		
65000	3⅞"	175000	6¼"	360000	8¾"		
70000	4 "	180000	6¼"	370000	8⅞"		
75000	4⅛"	185000	6⅜"	380000	9 "		
80000	4¼"	190000	6⅜"	390000	9½"		
85000	4⅜"	195000	6½"	400000	9¼"		
90000	4½"	200000	6⅝"	410000	9⅜"		
95000	4⅝"	210000	6¾"	420000	9⅜"		
100000	4¾"	220000	6⅞"	430000	9½"		
105000	4¾"	230000	7 "	440000	9⅝"		
110000	4⅞"	240000	7¼"	450000	9¾"		
115000	5 "	250000	7⅜"	460000	9⅞"		
120000	5⅛"	260000	7½"	470000	10 "		
125000	5¼"	270000	7⅝"	480000	10⅛"		
130000	5⅜"	280000	7¾"	490000	10¼"		
135000	5½"	290000	7⅞"	500000	10⅜"		
140000	5½"	300000	8 "				
145000	5⅝"	310000	8⅛"				
150000	5¾"	320000	8¼"				
155000	5¾"	330000	8⅜"				

New York Air Brakes—				
Ordinary low pressure brakes.....	50	60	50	60
High speed brakes.....	85	85	85	85
Automatic control equipment.....	93	93	93	
J Triple Valve with Supplementary Reservoir				104

The table below gives the area of piston in different diameter brake cylinders by which the above pressures should be multiplied and which will give the maximum load on cylinder end of cylinder lever:

Diameter Cylinder.	Area Square Inches.
8"	50.26
10"	78.54
12"	113.09
14"	153.93
16"	201.06

It might be stated here that the tables for width of brake levers on cars and tenders, can as well be used to get width of brake beams on engines.

An example of this is as follows:

Figure No. 2 shows a type of locomotive brake beam which is in general use.

Obtain the pressure (p) which is the force exerted on the vertical brake lever, or on the brake shoes direct; and then multiply this force (p) by length in inches from a point half way between center pin hole and shoulder of beam to center of pin hole. The product will be the maximum moment (Mm), and by referring to table giving the required thickness, the width (h) can easily be obtained.

The beam should not change in width (h) between the two end pin holes.

In a beam of this type, attention is directed to the point where the end bearing joins on the beams proper, designated by "A," Fig. No. 2. There should be a fillet at this point instead of a sharp corner, as is often the case.

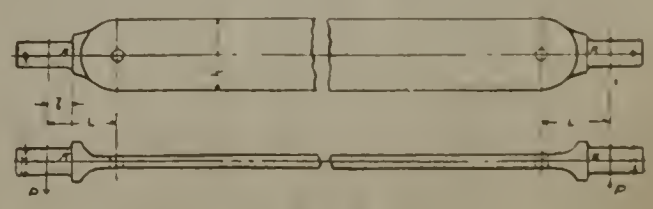

Fig. 2.

TABLE D—Moduli of Circular Sections

$\frac{\pi D^3}{32} = .0982D^3 = \frac{I}{r}$. Values of $\frac{I}{r}$ for Different Diameters

DIA.	0	1	2	3	4	5	6	7	8	9	10	11
0	0	.0982	.78560	2.6507	6.2848	12.2760	21.2112	33.682	50.279	71.918	98.20	130.70
1/16	.0000239	.11779	.86157	2.8205	6.5840	12.7411	21.88	34.59	51.46			
1/8	.0001918	.13981	.94229	2.996	6.89	13.22	22.56	35.52	52.57	74.61	101.92	135.21
3/16	.000647	.15069	1.0279	3.18	7.21	13.71	23.26	36.46	53.897			
1/4	.001534	.19179	1.118	3.37	7.54	14.21	23.97	37.42	55.14	77.72	105.50	139.82
5/16	.002996	.22202	1.2143	3.569	7.876	14.72	24.7	38.398	56.4			
3/8	.00518	.25528	1.3165	3.775	8.22	15.25	25.44	39.39	57.69	80.91	109.65	144.53
7/16	.0082	.295	1.42	3.99	8.58	15.79	26.2	40.4	58.99			
1/2	.0123	.331	1.534	4.21	8.948	16.338	26.968	41.428	60.31	84.19	113.67	149.35
9/16	.0175	.375	1.652	4.339	9.284	16.902	27.753	42.47	61.647			
5/8	.02397	.4214	1.776	4.6777	9.715	17.477	28.55	43.55	63.02	87.561	117.78	154.28
11/16	.0319	.472	1.906	4.924	10.114	18.067	29.37	44.613	64.386			
3/4	.0414	.5263	2.042	5.1785	10.524	18.668	30.2	45.71	65.786	91.02	121.99	159.30
13/16	.0527	.5847	2.235	5.442	10.945	19.284	30.976	46.815	67.21			
7/8	.0658	.6473	2.335	5.714	11.377	19.913	31.91	47.958	68.646	94.56	126.29	164.44
15/16	.0809	.7142	2.489	5.995	11.821	20.565	32.788	49.11	70.106			

To get the diameter of this end bearing, the following procedure should be followed:

Let D=Diameter.

π=3.1416

I=Moment of Inertia

S=Stress per square inch

Mm=Maximum Moment

r=radius of bearing

Then the moduli of the circular section is $\frac{1}{r}$ and the value of the same is shown in the following table, this value being obtained as follows:

$$I=\frac{\pi D^4}{64}$$

$$r=\frac{D}{2}$$

$$\frac{I}{r}=\frac{64}{D}=\frac{\pi D^3}{32}=\frac{3.1416D^3}{32}=.0982D^3$$

The method of using table is as follows:

$$Mm=\frac{SI}{r}$$

$$\frac{Mm}{S}=\frac{I}{r}$$

Let L=distance from center bearing to shoulder.

Mm=P×L

Then to use table, divide Mm by 15,000, the allowable stress per square inch, and this quotient should be taken in the table which will give the diameter of the bearing, the upper row giving even inches while the fractions at left side are fractions of an inch and the sum of these two is the diameter required.

The above covers all forged levers, but not those cast with an irregular section, for cast levers generally are made thicker and heavier at the edge and thinner at center with sometimes holes cored along the neutral axis. If levers are made of cast steel and regular in section. the foregoing will apply.

Brake Rods, Pins and Brake Rod Jaws.

The stress on tension brake rods is due only to direct pull, and, of course, must withstand, with a good factor of safety, the maximum pull that would in any case come upon it. This, it will be noted, will make, perhaps, as many different diameters as there are rods, unless a maximum diameter is taken and same made standard for all. This, however, will cause more weight to be carried in foundation brakes than is absolutely necessary; yet, on the other hand, it would be an advantage to be obliged to carry only one diameter of rod in stock.

If the pull (p) on rod is known, divide it by 15,000 which gives the area section rod. This, however, is all worked out and tabulated in table E, and the diameter of the rod can be read direct if the pull (p) is known.

For example, say the pull on rod is 14,500 pounds; then, by referring to third line of column marked "Pull on Rod" (P), it will be noted that the nearest diameter for a pull of 14,500 is 1⅛" rod.

For figuring strength of brake rod jaw, the allowable stress should not exceed 10,000 pounds per square inch. This is a smaller allowable stress than is taken for brake rods, because, in figuring jaws, the nominal diameter of pin hole is taken, and no allowance made for excessive wear or enlarging of the hole.

The strength of jaw is calculated as follows:

$$S=\frac{P}{A}=\frac{P}{2TW-2DT} \qquad P=S\times 2(TW-DT)$$

T=¾" if width (W) is less than 3½".

Either T or W should be assumed; and it is recommended that the thickness (T) be assumed to be ¾" and the width calculated.

The foregoing table E, gives diameter (D) of rod suitable for different pulls (P), with the corresponding pin diameter and width (W) for various widths (W) for the various thicknesses of T.

TABLE E—Foundation Brake Details

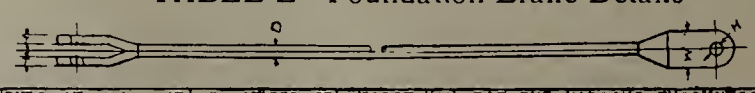

PULL ON ROD (P)	DIA. OF ROD (D)	DIAMETER OF PIN M.C.B.	WIDTH (W) FOR THE VARIOUS THICKNESSES (T) 5/8"	3/4"	7/8"	1"	1 1/8"	1 1/4"
9020	7/8"	1 3/32"	1 7/8"	1 3/4"	1 5/8"	1 5/8"		
11781	1"	1 3/32"	2"	2"	1 7/8"	1 3/4"		
14910	1 1/8"	1 3/32"	2 3/8"	2 1/8"	2"	2"	1 3/4"	
18408	1 1/4"	1 7/32"	2 5/8"	2 3/8"	2 1/8"	2 1/8"	2"	
22274	1 3/8"	1 7/32"	3 1/8"	2 3/4"	2 1/2"	2 3/8"	2 1/4"	2 1/8"
26507	1 1/2"	1 11/32"	3 1/2"	3 1/8"	2 7/8"	2 3/4"	2 1/2"	2 1/8"
31109	1 5/8"	1 15/32"	4"	3 5/8"	3 1/4"	3"	2 7/8"	2 3/4"
36080	1 3/4"	1 19/32"	4 1/2"	4"	3 5/8"	3 1/2"	3 1/4"	3 1/8"
41418	1 7/8"	1 19/32"		4 3/8"	4"	3 3/4"	3 1/2"	3 1/4"
47124	2"	1 23/32"		5"	4 1/2"	4 1/8"	3 7/8"	3 5/8"
53199	2 1/8"	1 27/32"			5"	4 1/2"	4 1/4"	4"
59642	2 1/4"	1 31/32"			5 1/2"	5"	4 5/8"	4 3/8"
66452	2 3/8"	2 3/32"				5 1/2"	5"	4 3/4"
73631	2 1/2"	2 7/32"				5"	5 1/2"	5 1/4"
81170	2 5/8"	2 11/32"				6 1/2"	6"	5 5/8"
89092	2 3/4"	2 15/32"					6 1/2"	6 1/8"
97377	2 7/8"	2 15/32"						6 1/2"
106029	3"	2 19/32"						6 7/8"
115040	3 1/8"	2 23/32"						7 3/8"

The Western Maryland is said to have ordered 6,550 tons of rails from the Bethlehem Steel Company and 4,050 tons of rails from the Pennsylvania Steel Company.

The Illinois Contracting Co. has ordered 2,600 tons of rails from the Illinois Steel Co.

The Interurban Traction Co. has ordered 2,200 tons of rails from the Illinois Steel Co.

The Harriman Lines are said to have ordered 1,200 tons of rails from the Pennsylvania Steel Company.

The Central of New Jersey is said to have ordered 2,500 tons of structural steel from the American Bridge Company.

The Boston Elevated Ry. is asking for bids on 600 tons of 85-lb. rails.

DUPO YARD LIGHTING.

By W. S. Austin.

At Dupo, Ill., about thirteen miles southeast of St. Louis Union Station on the St. Louis, Iron Mountain & Southern R. R. of the Missouri Pacific Railway System, is located one of the largest double hump freight yards in the West, designed to handle both north and south-bound traffic, each hump having a capacity of 120 cars per hour. The yard is about three miles long and about 800 feet wide at the classifying yards, with connections to the railroad company's Illinois division, East St. Louis, Ivory Ferry, the Terminal Railroad Association and other systems. The yard is divided into receiving, classification, forwarding, storage, caboose and repair yards. The two humps, the roundhouse repair yards, coal and water stations, and the power house, together with a hotel and other facilities, are located at practically the longitudinal center of the yard, making it very nearly symmetrical.

Under the direction of the construction department of the Missouri Pacific Ry., Westinghouse, Church, Kerr & Co., in 1906, acting as engineers and constructors for the railway, designed, constructed and equipped its Dupo power house. The following year the engineers were instructed to investigate and recommend a system of artificial illumination for the yard. All of the commercial systems of outdoor arc lighting were investigated but as the power house contained alternating current equipment the direct current systems could not be given serious consideration. Owing to business conditions all work in the yard was suspended from 1907 to 1909 in the fall of which year the subject was again taken up, and, as many improvements had been made in the different lighting systems, another investigation and report was made, which included flaming arcs in addition to the systems previously considered.

Several installations of flaming arcs were visited in and around New York, including those at the Bush terminal yards, the New York Central yards, and a foundry installation. In a portion of the foundry the carbon arcs (which the flaming arcs had superseded) had not been removed, making it possible to study the effect, intensity and quality of light produced by both systems by using first one system and then the other.

Tests made showed that in direct sunlight an 8-inch high white chalk figure made on a brown background with a ½-inch diameter crayon could be read up to 275 feet, and that on a dark night with the flaming arc the same figure could be read at a distance of from 100 feet to 150 feet, depending upon the position of the board with relation to the lamp; under the same conditions with carbon and other white light arcs the figures could not be read more than one-half the distance possible with the flaming arc. This had an important bearing on the selection of a lamp, as in operating the humps it is necessary that the men in the switch towers at the entrances to the classification yard be able to read the car numbers at a distance of from 100 feet to 175 feet in order to throw the proper switch in front of the approaching car.

A detailed investigation and study showed that the candle-power of the flaming arc was greater than that of any other type; that the quality of light generated by it was better suited for this installation than that produced by any of the other lamps, as the penetration in clear weather as well as in smoke and fog was greater than with any of the other types; and that it had the further advantage that the unshaded lamps would not blind or dazzle the eyes of the switching crews while working around the yard, even though they looked directly at the lamp or beyond it, thus making it unnecessary to provide expensive and complicated reflectors and shades.

Artificial Illumination at Dupo Yard, at Roundhouse.

A comparative study of the different kinds of flaming arcs was made to determine reliability, freedom from interruption, length of burning between trims, cost of operation, repairs, maintenance, etc., with the result that the regenerative flaming arc manufactured by the Adams-Bagnall Electric Co. was recommended for this installation.

A drawing herewith shows the outline of the yard and spacing of tracks, as well as the approximate location and spacing of lamps. The lamps are spaced closest around the humps and the distance between the lamps increases through

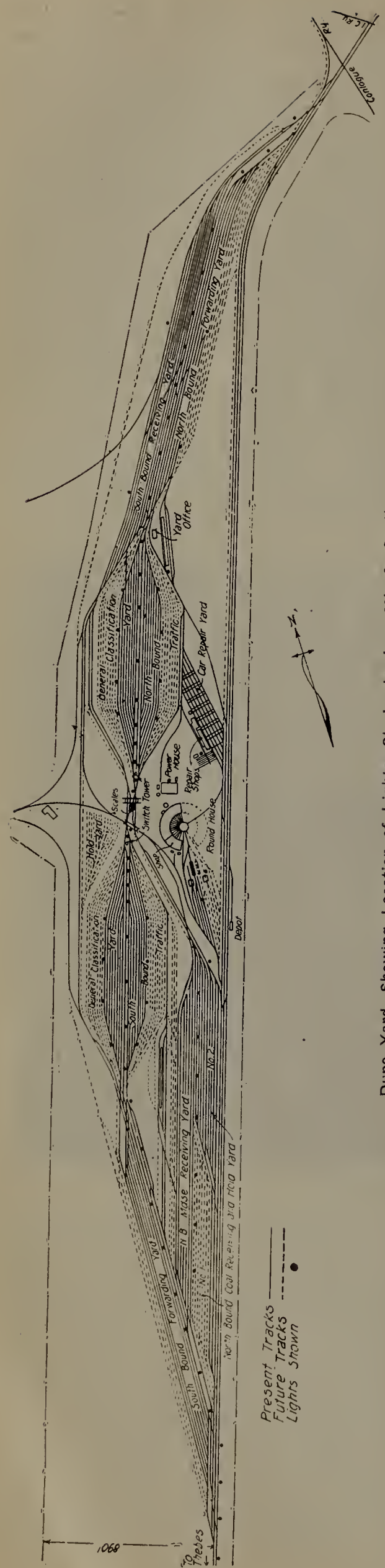

Dupo Yard, Showing Location of Lights, St. Louis, Iron Mt. & Southern Ry.

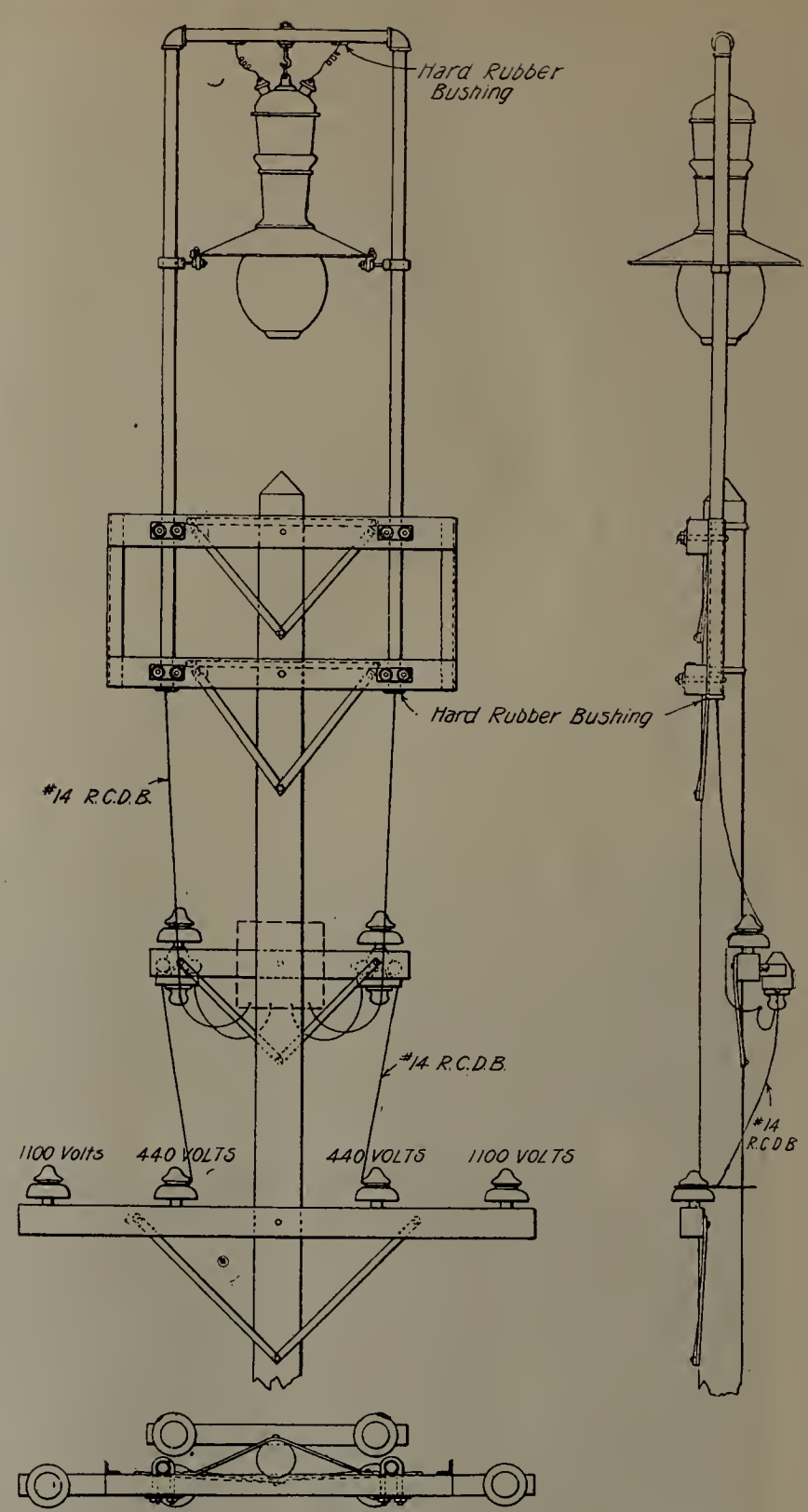

Method of Mounting Lights, St. L. & I. Mt. & S. Ry.

the classification yard and out into the forwarding and receiving yards, where some of the lamps are spaced 600 feet. A spacing of 400 feet was found to give a very satisfactory illumination for general work with the lamps located 40 feet above the rails, making it possible for men standing on the cars to see underneath the lamps.

The problem of locating the different lamps was worked out in conference with the railway engineers, and when the system was put in service it was found necessary to move but one of the lamps; this was not to change the distribution of light, but on account of one of the poles obstructing the view of the towermen. This being the first large installation of flaming arc lamps in a railroad yard in this country, no data was available that could be used as a guide in locating the different lamps.

The entire installation, including distribution and erection of poles, feeders, etc. was made without interfering with the operation of the yard and without any one being injured.

The different types of lamp suspension were considered, with the result that the lamps were installed in pole tops designed for the installation, as shown in one of the drawings. The arrangement of circuits is such that two ways are provided for supplying current to the lamps on the

humps and in the classification yards. No duplication was attempted for the other yards, where cars could be moved without artificial illumination, if necessary.

The intensity of illumination secured equaled all expectations, and when the lamps were started up in the north half of the yard the effect produced was such that engineers on trains crossing the Eads and Merchants bridges, twelve miles away, could plainly see the illumination, and residents as far distant as ten miles telephoned to ask what was burning at Dupo. Since the system has been put in operation it has been possible to secure results in operating and policing the yards at night such as have never been approached elsewhere. The photograph shown was taken at night and shows something of the intensity of illumination secured.

At the present time this yard is, without question, the best artificially illuminated railway freight yard in the country and the only one in which the results obtained give anything approaching a uniform intensity of illumination over the entire area.

STEAM TURBINES FOR LOCOMOTIVES.*

By W. Heym, Engineer, Magdeburg.

A company established in Milan by several engineers is busily occupied in attempting the solution of the problem of giving the steam turbine a suitable shape for the direct working of locomotives. A turbine of special design was fitted to an old locomotive, and extensive experiments were then made with this locomotive under definite conditons. One of the engineers concerned, Mr. Belluzo, has just published some of the observations taken during these experiments. In his paper he starts with the use of steam turbines for driving ships. In his opinion no steam turbine has as yet been brought out for steamships, which works quite satisfactorily and is quite reliable. Above all, two conditions have to be satisfied, namely, the possibility of reversing, and economic working at varying speeds; the latter condition is of particular importance as regards the navy. The reversibility has been obtained by a special turbine on the same shaft which the main turbine operates for going ahead. This reversing turbine turns in the direction opposite to that of the main turbine, and produces a vacuum in the condenser when the ship is going ahead. The problem of obtaining economic working at varying speeds has not yet been solved. The steam consumption per horse-power-hour is about 1.75 times as great at the average speed in question as at full speed. It is an important point that when a steam turbine is used for driving a ship there is a close relation between the speed and the power developed by the engine; when running at half speed the power required is only one-eighth of that which is required for running at full speed.

In the case of locomotives the working conditions and the gradients on any section of line vary so much that it is impossible to lay down any definite rule as to speed and power required. A locomotive may be required to give its highest power at varying speeds, or to give varying power at a definite fixed speed. The power must also remain unchanged, whether the locomotive is running forwards or backwards, and the locomotives must be able to start running under load. On the other hand, the space for the engine is exceedingly limited. In certain cases, a high efficiency is required, for instance under full load or at full speed or half speed; and it has in this case to be considered that the variation in the steam consumption, the power and the speed, must amount in current practice to about 40 per cent.

A special design has been adopted, in order to make it possible to obtain a good economy with a steam turbine even when the speed varies. This includes, in the first place, a distributer in which the steam expands, from the pressure it has in the turbine, to that existing in the turbine cylinder. Four sets of movable blades are used in connection with this distributer. At low speeds the steam strikes all the blades in succession, and is guided by the guide blades placed between every two blades. At high speeds the steam only strikes the first set of blades, while at intermediate speeds two sets and three sets can come into play.

The reversal is effected by a special device. The rotors have two sets of blades, of opposite curvature. When running in the one direction the steam passes through the blades of the one rotor and escapes at the other; when running in the opposite direction this process is reversed. In both cases the loss of energy due to the blowing action of the second set of blades will only amount to a small fraction of the total loss. Numerous experiments made with steam at different pressures show that this loss is only 2 to 3 per cent. Starting under load is only possible with a turbine in which the steam can strike all the blades simultaneously. In this way the maximum torque is obtained with the least consumption of steam.

The firm Miani Silvestri, Comi and Grondona, in Milan, made a practical trial of such a turbine. The locomotive, to which this turbine was fitted, had been built in 1876, and was entirely reconstructed before the trials were begun. The boiler had a heating surface of about 65 square metres (700 square feet) and generated steam having a pressure of about nine atmospheres. The locomotive originally had three driving axles, but during the reconstruction the whole weight of 26 tons, in round figures, was placed on two axles, operated by the turbine which gave 100 horse-power, in round figures.

The experiments were made on a very undulating section of line. Accurate observations were taken showing the variations in the steam consumption under varying loads and speeds. The consumption of steam never exceeded 17 kilograms per horse-power-hour (38 lb. per British horse-power-hour), for both directions of revolution of the turbine. A locomotive of double the weight with turbine of six to ten times the power would give much lower figures, if the available boiler pressure were 50 per cent higher. The locomotive started well under load both on curves and on gradients; the turning moment was a little less than 170 metre-kilogram (1,229.63 foot-pounds).

These experiments have proved that the following advantages can be attained by turbines on locomotives: 1 It is possible to attain higher speeds; 2 oscillation can be effectively prevented; 3 a saving is made in lubricants; 4 the fuel is utilized better; 5 there is a longer life and a lower cost of maintenance; 6 it is easier to drive the locomotive; 7 all the dangers otherwise connected with reversing are eliminated.

*Bulletin of the International Railway Congress.

The Wabash-Pittsburg Terminal Ry. is said to be contemplating ordering an additional 1,000 steel hopper cars.

The Bingham & Garfield has ordered 120 sixty-ton dump cars from the Pressed Steel Car Company.

The Minnesota, Dakota & Western has ordered 50 flat cars from the Haskell & Barker Car Company.

The Buffalo, Rochester & Pittsburg is said to have reinstated its inquiry for 2,000 freight cars, which it withdrew last month.

The Western Maryland is reported to have equally divided its order for 500 fifty-ton gondolas between the American Car Foundry Co. and the Mount Vernon Car Mfg. Co.

The Pittsburgh & Lake Erie is still in the market for 1,000 gondola cars and 1,000 hopper cars.

The Pennsylvania Equipment Company is in the market for a number of 30-ton box cars, some 70-ft. vestibule passenger cars and some 36-ft. cabooses.

GENERATION AND DISTRIBUTION OF ELECTRIC POWER AND ITS APPLICATION TO RAILROADS.*

By F. Darlington, Ry. Dept., Westinghouse Elec. & Mfg. Co.

Economy in the electric working of railroads was first obtained in street car work, where the weight of the cars was relatively small, as compared with heavy trunk line trains. The application of electric power to railroads has been developed from this beginning, first to the economical operation of interurban single car trains, and then to the operation of multiple unit trains. The latter use of electric power, that is, its use on trunk lines has thus far had little or no practical application, excepting where other conditions than economy of operation have been important. Every development in electric power and electric railroad work has advanced the time of economical trunk line electrification, until to-day there are excellent opportunities for important savings in this direction.

When electric power was first generated and distributed from central stations, it was chiefly for electric lighting; next it was used for fan motors and other small motors. After awhile there was a demand for still larger motors for all kinds of industrial purposes; later, electricity was applied to moving light street cars, and simultaneously it was applied to factory and mill work, and then to larger railroad uses, but each step in the wider use of electric power was the result of more economical power generation and distribution and better methods of aplication.

In Montreal and vicinity there is now developed, or in process of development, upwards of 200,000 electric horse power, chiefly from hydro-electrical plants. This is a large amount of power for a city of this size, and it demonstrates the very general application of electricity and the economy of electric power generation in large units.

The electrification of a railroad necessitates three principal installations:—First is the electric power generating plant; second is the transmission and distribution system for carrying the electric power from the generating plant to the moving train, which includes transmission lines, sub-stations, trolley or third rails, etc., and, third, the electric locomotives or motor cars. Electric power plants and transmission lines, trolleys, etc., and electric locomotives are all very costly, and it may seem at first glance, that since they cost far more than steam locomotives, they may prove a costly means of hauling trains. The situation regarding electric locomotives vs. steam, is exactly the same to-day as was the situation a few years ago regarding electric drive vs. steam engine drive for factories and mills. Take, for example, cotton mills. In order to obtain electric drive for these, it was necessary to install an electric power generating plant, electric transmission lines, distribution lines, transformer stations, and electric motors, costing for the complete electric equipment generally between $150.00 and $250.00 per horse-power delivered to the mills, while a good steam engine plant with condensing engines, etc., for large mills, could be installed for approximately $50.00 per horse-power. It seemed difficult in advance to demonstrate the net economy of electric drive when the difference of installation cost was taken into consideration, but experience has amply demonstrated the economy. To-day there is one power system known as the Southern Power Company, with transmission lines in parts of North and South Carolina that is serving over 160 large customers of power, of which over 100 customers are cotton mills, and many of these cotton mills have steam plants installed, which have been discontinued by electric power, because of its superior economy. This condition has come about rapidly as the result of building up large central power generating plants and obtaining the resulting economy of generating power in large units.

There are many central points already established where power is generated and transmitted over large areas. Montreal is one of the important centers. In California there are two great power centers, one around San Francisco, another including Los Angeles; another large power center is at Grand Rapids, Michigan; another about Buffalo and Niagara Falls; another center near Albany and Schenectady, N. Y., and then there are those of North and South Carolina, one of which has been mentioned, also there is a large power system north of Chicago, and another in the outlying districts around Boston. These are examples of scattered powers being supplied from central power plants and they each offer opportunities for purchasing power from central stations, and in these places, the application of electricity to railroading can be carried out by the purchase of central station power and the installation of trolley lines, or third rails and electric locomotives, and the same things that make electric drive economical for cotton mills will all help to make power economical for railroad operation. A railroad locomotive is simply a portable steam engine usually of about 500 to 1,200 h.p. capacity, according to the weight of the locomotive.

In the experience of mills adopting electric power it was found that the economy of electricity vs. steam did not rest wholly on the difference in cost of power by electric plants and steam plants, but there were many secondary advantages resulting from electric drives that were not strictly questions of the cost of power, but were the results of certain advantages that pertain to electric working. The same thing is true where electric power is used on railroads. There are many kinds of work and many conditions of work that can be economically accomplished with electric power that are too expensive or are unadvisable with steam locomotives. They result in electric service giving better facilities and making better gross earnings than can be made in such places with steam.

The constantly increasing economy of central station power generation has led to wider and wider applications of power for stationary uses, and has finally put the power business on a basis where the application of electricity to move trunk line railroad trains can be made advantageous under many conditions where it has not yet been applied.

It is the purpose of this paper to discuss the generation and distribution of electric power, with especial reference to its use on railroads for the operation of heavy trains, such as are generally used on steam roads.

In order to fully appreciate the engineering matters and commercial questions that determine the conditions favorable for the generation and application of electric power, the following facts should be kept in mind:

Quantity of power is measured in two ways:

First, by the *peak* load or the maximum momentary requirement, which determines the required capacity of the generating plant in horse-power or kilowatts.

Second, by the amount of power in horse-power hours or kilowatt hours, which is determined by the *average* load upon the power plant and the length of time it is maintained.

The ratio between the maximum load and the average load on a power plant is spoken of as the "load factor," and as the term "load factor" is used under different conditions for indicating other ratios, it should be understood that in this paper it denotes the ratio between the average load on the plant and the maximum or peak load that may occur for a short period.

The cost of producing power naturally divides itself into two parts. One of these depends on the size of the plant required for the maximum load that it has to carry, and the other on the average output of the plant or the average amount of power produced. The first includes all fixed charges, such as interest on the cost of the plant, taxes, sinking fund, etc., reasonable charge for upkeep of plant and allowance for obsolescence. The second includes nearly all operation expenses, such as station labor, fuel, water, and supplies of all kinds that go into the operation and maintenance of the plant, which are mainly consumed by reason of the operation.

*From a paper before the Canadian Railway Club.

Both fixed and operating expenses of power production are much less per unit generated in very large plants, working at a good load factor, than in small plants, or in plants working at a poor load factor. This is well illustrated by all modern central station electric plants.

While there are great variations in individual cases, it is reasonable to consider the cost of operating labor per kilowatt hour output of a 50,000 k.w. steam plant as somewhere in the neighborhood of 15 per cent or 20 per cent of the labor for a 1,000 k.w. plant.

The matter of power plant efficiency is greatly in favor of large plants as compared with small ones. This is especially true in regard to steam plants, but is also true to a certain extent of hydro-electric and gas engine plants. In modern steam turbine plants working at a good load factor ,the fuel economy of a 50,000 k.w. installation will often be better than the economy of a 1,000 k.w. plant in about the ratio of 1 to 2 or even 1 to 3. There are some large steam plants working on a thermal efficiency, or an efficiency between the heat units of the fuel supplied and the heat units of electric power output, of 10 per cent or 11 per cent, which is equivalent to about 2¼ to 2½ lbs. of best quality coal per kilowatt hour output, or 1.7 to 1.9 lbs. per electrical horsepower hour. In a 1,000 k.w. plant the thermal efficiency in practical operation will rarely exceed about 4 per cent, which is equivalent to about 6 lbs. of good coal per kilowatt hour output. There are, of course, a great many things affecting plant efficiency that necessarily make these figures very general. To get exact figures in any specific case it is necessary to enter into many details, such as load factor, type of steam plant, whether engine-driven or turbine-driven, whether condensing or non-condensing, etc., but whatever the other conditions may be, large capacity of a generating plant is one thing that always tends to cheap power production and a good load factor is another.

Load Factor on Electric Plants for Working Heavy Railroads.—Plants generating power for heavy railroad operation generally show a poor load factor. There are several fairly large plants in America that are used exclusively for supplying power to main line railroad trains, and their load factors (ratio of maximum output to average output) are somewhere between 20 per cent and 35 per cent, which means that the average load on the plant is only about one-quarter of their capacity. On this basis the fixed charges alone on the cost of steam plants generating electricity for railroad service (interest on investment, taxes, depreciation, etc.) are generally between .4c and .5c per kilowatt hour delivered.

At such poor load factors the operating expenses per kilowatt hour are also very high, and in existing power plants for trunk line railroads the operation and maintenance, exclusive of fuel, comes to about .20c to .30c per kilowatt hour (except where the load is equalized and the peaks supplied by very heavy and costly storage batteries, which modify the results by improving the load factor). Fuel is the other principal operating expense in power production, and in existing railroad plants it amounts to about .11c to .155c per kilowatt hour for each dollar per ton for good coal.

If power stations were much larger than the existing railroad plants above referred to, whcih are between 10,000 kilowatts and 25,000 klowatts each, the construction cost per kilowatt capacity would be much less, since very large plants cost less per kilowatt than smaller ones. If a great many locomotives were supplied by a single plant, the load factor might often be doubled, and these two things together might easily reduce the fixed charges per k.w. hour from .4c or .5c per k.w. hour to approximately .2c or less per k.w. hour. Again, because large plants can be operated and maintained more cheaply proportionately than smaller ones, and plants working at a good load factor cost little more for labor and repairs than when working at a poor load factor, the operating labor and repairs of power plants for railroads might be reduced to 10c or .15c per k.w. hour, as against .20c to .30c from actual experience of railroad plants at poor load factors. Moreover, as the coal consumption per k.w. hour is very much less in large plants working at good load factors than in smaller ones at poorer load factors, there is a chance for 10 per cent to 20 per cent saving in the item of fuel.

All of the foregoing shows that electric power should, wherever possible, be supplied at a good load factor, which may be secured by serving as many different operations as possible from one large station.

Each of the existing American installations for trunk line elctric operation has its own power plant, which generates electricity for its individual use and for practically nothing else. The load factor on the power plants is poor, excepting in two instances, the N. Y. C. & H. R. R. R. and the Detroit River Tunnel of the L. S. & M. C. R. R., where it is partially equalized by tremendously costly storage batteries. In each of the cases the electrified section is relatively short, and does not cover what would ordinarily be a complete locomotive run or operating division. In each instance steam locomotives take all or many of the trains to the electrified zone, and except for the difficulties and danger of tunnel operation, could readily complete the run without the electric service, and at very little extra expense. It is obvious that electric operation on a short section, which breaks up an engine run and substitutes electric motive power for a short distance only, must be a source of extra expense (regardless of the superiority, or otherwise, of electric power relative to steam power), since, after a steam locomotive has made the 80 or 90 miles of an ordinary engine run of 100 miles, more or less, for which it is adapted, it will not entail much additional cost to complete the run with the steam locomotive. To install an entirely new motive power system for a few miles of operation must always be disproportionately expensive.

A projected electrification of importance has recently received considerable public notice. It is the electrification of all the steam railroads within the metropolitan district of Boston, upon which subject the principal railroads entering Boston have made reports to a special commission appointed by the Massachusetts Legislature. These reports give estimates of the equipment cost and operating expense for the electrical operation of all steam railroad trains within the metropolitan district; and as the proposed power plants are to be used for railroad work only, they show very poor load factors. Under these conditions, where electric operation is not to replace steam locomotives for an entire locomotive run, but only to take up the work of steam locomotives at or near the metropolitan district lines (irrespective of the end of the usual engine run), the report of the railroad companies that the cost of electrification would be much heavier than the saving in operating would warrant, should seem entirely reasonable.

It is clearly the view of the officials of the N. Y., N. H. & H. R. R. that breaking up a train run to change from steam to electric power, and *vice versa*, is too expensive a method of operation. This is indicated in their report to the Massachusetts Legislative Commission, in which they say:

"It therefore seems quite safe to conclude that no general substitution of electric for steam traction should be made unless the substitution is complete, including passenger and freight operation, and yard switching in addition, and also that, in making such substitution, the operation should be extended to include the full length of run or engine district, in order to avoid the uneconomical subdivision of the present 'trains run,' together with the added expense and delays incident to intermediate engine transfer stations."

Much valuable practical experience in the cost of heavy trunk line operation by electric power has been gained from American railroads, but it is manifestly unreasonable to expect them to show economy of operation and pay fixed charges on the investment. Take, for example, the New York terminals of the N. Y., N. H. & H. R. R., or the N. Y. C. & H. R. R. R., and suppose that, instead of electrification of their terminals, an improved steam locomotive, which was smokeless and more economical than the main line locomotives, had been used within the limits of the present electrified zone. Under such circumstances, even if the improved locomotives had been better than the outside main line locomotives employed to take the trains to the electrified zone, the cost of providing new locomotives and changing the motive power on all trains entering the zone would have been a heavy additonal expense sufficient to more than offset a large superiority in the terminal locomotives. The failure of electrification to show a profit under such conditons is not an indication of poor economy of electrical operation, but is due to very unfavorable and costly operating conditions for any kind of motive power. It is well known that some conditions are much more favorable to electric traction, in comparison with steam operation, than others, but none of the practical applications to trunk line operation in America have been such as to realize the conditions that are most favorable for superior economy by electric power. It is fairly established by practice that operation of heavy trains by electric power saves large sums in locomotive repairs and approximately one-half of the fuel as compared with steam locomotive operation. Fuel saving by electric operation is only realized to the best advantage where electric power for railroads is put out from generating stations working at good load factors; and, as already explained, this is only realized to the fullest extent from a diversity of service and large generating stations.

In the repairs of electric locomotives as compared with steam, there are many who claim that the saving is one-half or more. This saving is generally greater in instances where steam locomotives are replaced by motor car trains than where electric locomotives are used, but the saving in locomotive maintenance and repairs cannot be realized to the best advantage where locomotive runs are short.

There are many secondary savings by electric operation, such as increased facility of train movements, additional capacity of terminal yards and crowded main line tracks, reduced cost of track maintenance, ability to operate motor car trains instead of locomotive-hauled trains, etc., but none of these are realized to best advantage in very short runs.

The tendency of modern practice, based on economy of power generation, is working towards the time when all districts in which the aggregate amount of power used in large industries will be served from central power plants located at strategic points reasonably near the center of distribution, and where conditions are favorable for making cheap power. When competition fairly drives all small power-users (and users of power in less quantity than 5,000 or 10,000 k.w. will eventually be relatively small for certain territories) to seek central power plants for their source of power, then all kinds of power for all classes of work within given territories will be supplied from a single system of high tension transmission lines having branches and spurs such as railroads have in populous countries.

Such conditions already exist in large cities where the lighting and power and street railway companies have centralized their power generating business to a very great extent, but centralization of the power business in more widely distributed areas may become even more complete than in concentrated metropolitan districts.

From such large central stations the supply of power to electric railroad operation will be extended, and will be combined with electric lighting and industrial power business on a large scale, and perhaps with some electro-chemical work. This will result in larger plants and better load factors, and consequent reduction in the cost of power, together with monopoly of power business, since the erection of competitive transmission systems would be too costly where the distances to be covered are great.

Transmission Lines.—In order to establish central power plants, supplying power to large areas and to various classes of service, thereby securing large units for power generation and good load factors, it is necessary to have effective means of electric power transmission and distribution. In power transmission, as in power generation, the best economy is secured by handling power in large units. Under ordinary circumstances it would not be profitable to transmit 1,000 k.w. 25 miles, because the first cost and maintenance of transmission lines 25 miles long would entail too heavy a charge for so small an amount of power; but, for large amounts of power, transmission apparatus is economical for very long distances, so that it is often profitable to construct lines over 100 miles long from a source of power supply.

Both the economical size of the plants and their distances apart will largely depend on the total amount of power used in the territory served; and, within certain limits, the greater the amount of power the greater the distance apart of the central stations, since it is economical to transmit large powers longer distances than small powers.

New types of insulators for transmission line, especially insulators of the suspended type, and a better understanding and application of protective devices for high tension lines against both lightning and short circuits, have made it possible and economical under ordinary conditions to locate generating stations from 100 to 200 miles or more apart, where the quantity of power is large and the other conditions favorable. When once any country or large territory is provided with such transmission lines, with connections to large generating plants, then the electrification of railroads will become quite a different problem from what it is to-day. Steam railroads in such territories contemplating electrification of their lines will not be confronted with the necessity of themselves going into the central station power business, but will be able to purchase power and to accomplish the electrification of their tracks by erecting electric conductors along their right-of-way and purchasing electric motive power apparatus. The purchase of electric power by railroads will become quite as simple as the purchase of coal is to-day; and electric power companies when once established, as described, will be in a position to sell power to all of the various railroads, whether competing or otherwise, which may be located within the territory reached by their transmission lines. Such will be the tendency of progress, because it is the economical thing to do, since it secures the economy of large generating plants working at a good load factor and transmission lines carryin power in large quantities.

One of the ablest railroad men in the United States takes about this view of the matter: If a railroad requires power for its uses in a country that is supplied from a central station power plant doing a general power business, it is advisable and right for the railroad to purchase its power from such a supply company as long as it does not have to pay the supply company more for such power than it would cost the railroad to produce the power itself; and the railroad in such cases will generally be able to pay a price for its power that will leave the power company a profit, while the railroad will share the prosperity of the power company by the increased transportation

business built up through its means. The very fact of the power company having the railroad contracts will assist the company in making the power more cheaply for all purposes, including the railroads, because every additonal customer reduces the generating cost per unit of power by increasing the output and load factor of the plant.

At the present time railroad men who are seeking to get electric power plants with good load factors, outside of metropolitan districts, realize that wherever their transmission lines extend they should realize large returns if they are in a positon to furnish power for all kinds of work at reasonable rates, and that cheap power develops a country and increases railroad business and affords a secondary source of profit. There seem to be some particularly good opportunities for the sale of power for irrigation pumping from plants designed for railroad power supply in some of the irrigated countries of the Middle Western United States, where, with reasonable priced power, much profitable irrigation work can be done by pumping water where it cannot be supplied by gravity. The same electric power plant that generates electricity for railroad working can be made to automatically start electrically driven pumps whenever the load on the railroad does not utilize the full power of the generating plant. With moderate priced power, irrigtation by pumping promises to become a very large business, and an ideal supplement to a railroad load for equalizing the demand and raising the load factor on power plants. In such work railroads would derive a triple profit from electrification, wherever conditions will justify the substitution of electric for steam locomotives. They will make a saving in the railroad motive power; they will share the advantage of better load factors secured by combining irrigation work on the power plant from which they can take their electric railroad power, and they will get a return on the increased travel and freight business resulting from irrigation works developing the surrounding country. Then, again, the larger the power generating plants become and the more power the railroads use, the more cheaply power can be generated and sold. This will help the territory concerned, not only in irrigation, but in every way that cheap power benefits a district. It follows that everything that goes to increase the size of central stations and improve the reliability and economy of power transmission contributes to improve the means of railroad operation by electric power, and that other classes of power work that build up the size of the plants by improving the load factor can be combined with railroad power to a special advantage. This advantage will be realized by establishing power centers with apparatus and equipment suitable not only for all kinds of railroad work, but also for all kinds of industrial power supply, all kinds of electro-chemical or other classes of work, and for everything for which electric power can be used.

Every improvement in the economy and efficiency of electric power generation and transmission has furthered the abandonment of small power plants and the adoption of large central station systems. Economy and convenience are so much on the side of large units that a power business, once established under favorable conditions, will naturally grow into absolute control of the business in its territory, especially where the power is supplied over a considerable territory requiring extensive transmission lines. Centralization of power business will result, just as telephone companies have monopolized telephone business in certain districts, because it is more economical and convenient to serve all customers from one system than to keep up two systems, and just as railroads tend to control the transportation business adjacent to their tracks.

Generating plants that are favorably located and well established, especially if they have control of water powers or coal mines, have an immense advantage from being first in the field, and every improvement in the means of power transmission and distribution will increase the advantage.

Discussion.

Mr. A. B. Brown: Those who are responsible for the handling of heavy tonnage on divisions where an occasional grade is encountered know the difficulties experienced occasionally with steam locomotives due to the pressure dropping back from one or more of the causes which contribute to this in service. I have seen steam locomotives lose time and even stall on grades, thereby delaying not only that particular train, but others following or running in opposite direction. On this account I have been surprised to note the way an electric locomotive will pick up a load and keep the train moving on a grade; in other words, there does not appear to be the same tendency to stall. Possibly Mr. Darlington might be willing to give us the reason for an electric locomotive handling itself so much better than a steam locomotive of the same capacity under the conditons named.

Mr. Darlington: A properly designed electric railway system includes the power generating plant and electric locomotives with electric conductors connecting them together. The electric conductors form a link between the generating plant and the electric locomotives. If the electric designers and builders have accomplished the work that is intended by an electric railroad system, the link between the power plant and electric locomotive is the means of delivering the power in large quantities from the power plant to the electric motors that drive the locomotive. It is because of the superior power of large central generating plants, compared with portable steam engines on steam locomotives, that electric locomotives receiving power from central stations are more positive and less liable to stall than are steam locomotives. It is because an electric locomotive has the power of a large power house behind it, instead of a relatively small portable steam engine, as on steam locomotives, that the former are more powerful in starting and less liable to stall.

Mr. W. N. Dietrich: To look at the question from another standpoint, I would request, Mr. Chairman, for the purpose of arriving at an opinion as to the relative cost of steam and electric operation, that we have you act for the time being in the capacity of president of a railroad corporation which desires to go into the question of electric operation. We will assume that you approach the electrical companies and state that you have a railroad approximately 200 miles long, all equipped in every way, including freight and passenger rolling stock. You estimate that it will take about 20 steam locomotives to handle the traffic, but you have yet to purchase the motive power. You ask, "What would be the approximate cost of steam motive equipment on the one side of the account, and electric motive power on the other side?"

Mr. Darlington: This question, which is a very pertinent one, I can answer in general terms. For the electrification of 200 miles of steam railroad track with 20 locomotives operating, the cost of electrification, including the generating plant, transmission lines, trolley or third rails, and also the electric locomotives, would be several times as much for electric power as for steam. The cost of a steam locomotive, you may say, is between $15,000 and $20,000. The cost of an ordinary electric locomotive is somewhere between $20,000 and $40,000, which amount does not include the cost of the generating plant, or trolleys, etc., so when you go to electrical equipment the cost is several times the cost of steam locomotives, just as I said it was in the cotton mills, where steam power plants cost about $50 a horsepower, and electric power equipment costs several times as much. The advantages of the electrical plant offset

the great difference in cost. There is a limit beyond which you cannot economically carry the difference in cost. When we electrify we have got to save enough money to pay the increased fixed charges due to increased cost, and have something left for the sinking fund and profit, else we do not want electric power. The use, under proper conditions, of electric power which is available in this country of water powers, would certainly pay all these extra charges and show a good profit.

W. N. Dietrich: Assuming in the case of electrification that there is considerable loss in the transformation and transmission of power, and for this reason that an electric power house will be required of the combined capacity of the steam locomotives, which in our assumed instance is 200,000 h.p., an electric plant of this size would cost about $100 per horsepower, or $2,000,000. The transmission and trolley, or third rail equipment, will cost about another $2,000,000, or, roughly, $4,000,000 altogether.

In the case of the steam motive power $20,000 has been mentioned as the approximate cost of a steam locomotive. This is undoubtedly high for an average size locomotive. But using this figure, twenty locomotives would cost $400,000.

As far as the original investment is concerned, and this is always a very important consideration, this comparison would indicate that in the assumed instance the electric equipment would cost about ten times as much as the steam.

Another consideration, it seems to me, is emphasized by the fact that we have had illustrated and described to-night three systems of electric traction, viz., the single-phase, the three-phase and the direct-current third-rail method. In many instances well known engineers are not of the same opinion as to which of these three systems is best. In veiw of this, and of the apparent heavy investment required for electrification, and also of the fact that, on the other hand, the steam locomotive is continually improving in general efficiency, it would appear that for some time to come the sphere of usefulness of electric operation will be limited to special cases such as city terminals, tunnels, heavy grades and places where traffic is dense or coal is costly, or power is very cheap.

Mr. Darlington: I think the figures the gentleman has taken (of course, they are assumed figures) are a little too extreme. Nobody is going into electrification where the motive power is going to cost $300 per electric unit. It is not correct to classify the electric railway systems geographically, because the engineers have not taken sides on the subject of systems, according to their geographical residence in Europe or America. I believe the foreign practice is going very largely to single-phase alternating current, and two proposed American installations which are receiving very careful consideration are being planned for three-phase alternating current, and another three-phase installation is already in operation in America, you know. I do not think we ought to delay a careful consideration of electrification just because different details of motive power are recommended by different engineers. When the final consideration of the electrification of large railroads comes up it will be met in exactly the same way as other engineering problems have been met. When the work is presented for final accomplishment the engineers will decide whether it will be with direct-current, with single-phase or with three-phase. The time for electrification will be when the central power plants are able to supply electic power in large quantities, and at suitable prices. When this comes, the engineer will find the best way to do the work.

W. D. Hall, Superintendent St. Clair Tunnel, G. T. Ry., Port Huron, Mich.: In reply to the question put by Mr. Murphy as to whether the electrification of the St. Clair Tunnel increased the haulage capacity, I would say that the haulage capacity has been increased fully one-third. With the steam locomotives, no matter how much business there was for them to handle, it was necessary that they should be taken out of service at frequent intervals for fire cleaning, coal and water, so that in addition to the fact that we can now haul trains of 1,000 tons and over up the two per cent grade as compared with trains of only about 750 tons with the steam locomotives, and this without slipping the wheels and consequent delay; the electric locomotives are always available for service.

It may be of interest to know that while the St. Clair Tunnel power plant has a rated capacity of only 2,500 k.w., the average cost of operating labor is only .23c per k.w. hour, although the load factor (ratio between average and maximum load) seldom exceeds 18 per cent.

As already pointed out, with perhaps the majority of terminal propositons, it is unreasonable to expect that electric operation will show economy after paying fixed charges on the investment, yet it is gratifying to know that under certain conditions, such as operating on grades through tunnels, it is possible for the saving in fuel for locomotives alone to nearly pay a reasonable fixed charge on the cost of power plant and lines, to say nothing of the increased haulage capacity, absence of smoke and gases, saving due to decreased cost of track maintenance, and in other directions, depending on the prevailing conditions. The great saving in fuel is due to the fact that with modern stokers and other equipment slack coal can be burned economically, whereas for the steam locomotives a more expensive grade of coal must be used, a large percentage of which is wasted with the present method of firing locomotive boilers.

WEIGHT TRANSFER IN ELECTRIC CARS AND LOCOMOTIVES.*

G. M. Eaton, Westinghouse Electric and Manufacturing Company.

When the axles of an electric locomotive or car are independently driven, that is, when each axle is driven by its own motor, it is well recognized that under maximum tractive effort conditions the wheels on certain of the axles will slip on the rails in advance of the other wheels. The fundamental principles acting to produce this result, however, are not so generally understood and a brief explanation will show the importance of giving due consideration to this as a feature of design in order to obtain maximum adhesion and reduce the liability of slipping of the wheels.

The simplest case may be illustrated by a mine haulage locomotive in Fig. I. Assume that the locomotive is standing still and is exerting its maximum draw bar pull in the direction *A*. The draw bar pull, as it is applied to the locomotive, may be represented in location and direction by *B*. The wheels are then exerting an equal force at the rails and the rail reaction on the locomotive is represented by $C = C/2 + C/2$ which, under the conditions noted, is equal to *B*. It should be noted that *B* is less than the tractive effort of the motors by the amount necessary to overcome the static internal friction of the locomotive. The two forces *B* and *C* then constitute a couple which is tending to produce an anti-clockwise rotation of the entire locomotive. To maintain equilibrium there must be an equivalent couple tending to produce an opposite rotation of the entire locomotive. It is evident that the only points where such a couple can exist are the points of contact between the wheels and rails and the forces are represented by *E* and *F* which are equal. That is to say, a part of the weight on the wheels *12* is being used to maintain equilibrium and is not available for adhesion, while the rails are exerting on the wheels *11* a force in addition to their normal share of weight and this force as well as the weight is available for adhesion. If *W* is the weight of the locomotive and if in repose this weight is equally divi-

---

*First published in the Electric Journal.

ded between the two axles, it will be seen that under maximum tractive conditions the rail pressure on the wheels *11* equals $\frac{W}{2} + F$ and on the wheels *12* equals $\frac{W}{2} - E$. The value of E and F may be determined from the equation of equilibrium $B \times D = E \times G$ or $E = \frac{B \times D}{G}$ where D is the distance of the line of application of the draw bar pull above the rails and G is the wheel base of the locomotive. The expression $E \times G$ will be referred to as the transfer couple. Then with an equal coefficient of friction between the rail and each set of wheels it is evident that if the motors *5* and *6* are taking an equal current the wheels *12* will be the first to slip.

It will be noted that in this discussion no attention has been given to the method of mounting the motors. Given a constant weight distribution in repose on the two axles with various motor arrangements, it makes no difference where the motors are hung or how they connect to their axles, except that the connection must be such as to produce an equal pull at the wheel tread with equal current in the motors. The only factors necessary in determining the value of E or F, termed the weight transfer, are the draw bar pull, the height of the draw bar above the rail and the wheel base. This is because the draw bar and the wheel contacts with the rails are the only points at which external disturbing forces acting upon the entire locomotive can be applied. Such factors as gear tooth pressure, axle bearing pressures, etc., are strictly internal forces producing internal stresses in the locomotive framing, etc., but having no

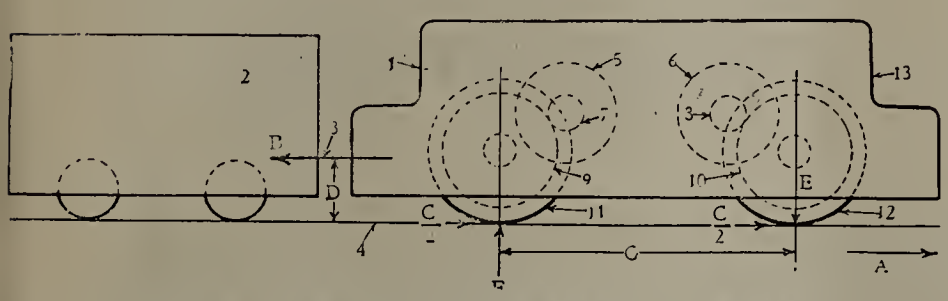

Fig. 1.—Mine Haulage Locomotive Exerting Draw-Bar Pull at Standstill.

effect upon the equilibrium of the locomotive, as a whole. They are, in other words, "boot strap" forces.

If the locomotive service is such that the maximum draw bar pull is demanded in only one direction it is evident that the most advantageous use of the adhesion can be obtained by making the normal or repose weight on the wheels *12* equal to $\frac{W}{2} + E$ and upon the wheels *11* equal to $\frac{W}{2} - F$. Then under the maximum tractive conditions, each pair of wheels would have a weight of $\frac{W}{2}$ available for adhesion and theoretically both wheels would slip at the same instant. When, however, as is usually the case, the maximum effort is demanded in both directions it is evident that this arrangement would be unsatisfactory.

A very easy way of making use of the total adhesion at all times is to connect the two axles by quartered side rods as in a steam locomotive, and mining locomotives and electric cars have been built embodying this principle. The two motors and the two axles then become a rotative unit and individual slippage can not occur. Another method of preventing the wheels *12* from slipping prematurely would be to reduce the percentage current passing through the motor *6*, and this has been done on some experimental locomotives. It has proven, however, to be an unjustifiable complication.

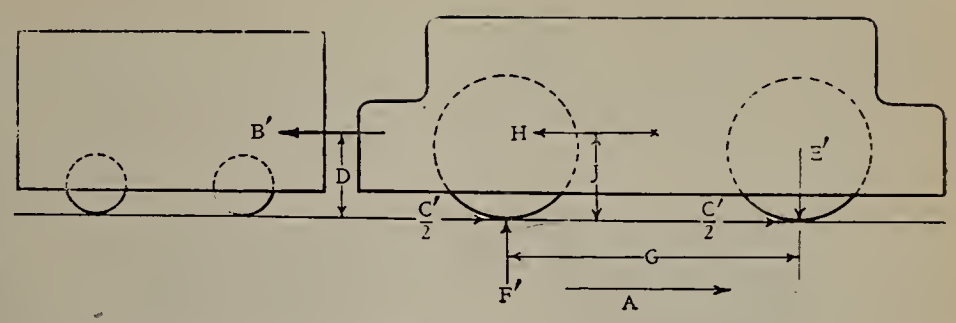

Fig. 2.—Mine Haulage Locomotive, Accelerating.

When the locomotive is accelerating, the conditions are somewhat different. The forces acting under these conditions are indicated in Fig. 2. Assuming the tractive effort of the motors to be the same as before, it will be noted that the rail reaction upon the wheels, viz., C', is less than C in Fig 1, due to the fact that the tractive effort of the motors is partly expended in producing accelerated rotation of the armatures, gears, wheels, etc., and in overcoming the total running friction of the locomotive. If it is assumed that one half of the energy used in producing accelerated rotation is expended on the armature and that the other half is absorbed by the gear and wheels, then the forces producing this accelerated rotation will produce no weight transfer. In the case of gearless motors a slight weight transfer is produced by the forces which cause accelerated rotation, but as the transfer is comparatively small, it will not be of particular interest to outline the method of computation. (It should be noted that the relative effects of the internal friction of the locomotive under the static conditions of Fig. 1 and the accelerating condition of Fig. 2 have been omitted from the discussion.)

The tractive effort of the motors during acceleration is further expended in overcoming the inertia of advance of the entire locomotive. The force exerted by the inertia of advance is represented by H, Fig. 2, which acts at the center of gravity of the entire locomotive. The draw bar pull B' is then the remainder of the tractive effort. The equation of equilibrium of advance is $C' = B' + H$ and the equation of equilibrium of rotation of the entire locomotive is $E' \times G = B' \times D + H \times J$. The expression $H \times J$ will be referred to as the inertia couple.

When the locomotive is on a grade as in Fig. 3 there is a weight transfer to the down hill wheels due to the grade itself, the weight W being divided upon the wheels *11* and *12* in the ratio of L to K; however, under conditions practicable for adhesive operation this transfer is very small. For instance, the transfer due to a ten per cent grade with a locomotive of the type shown in Fig. 3, whose center of gravity is distant from the rail by an amount equal to say one-fourth of the rigid wheel base, would be approximately 2.5 per cent of the total locomotive weight.

When running up a grade the rail reaction upon the wheels must not only overcome the entire running friction of the loco-

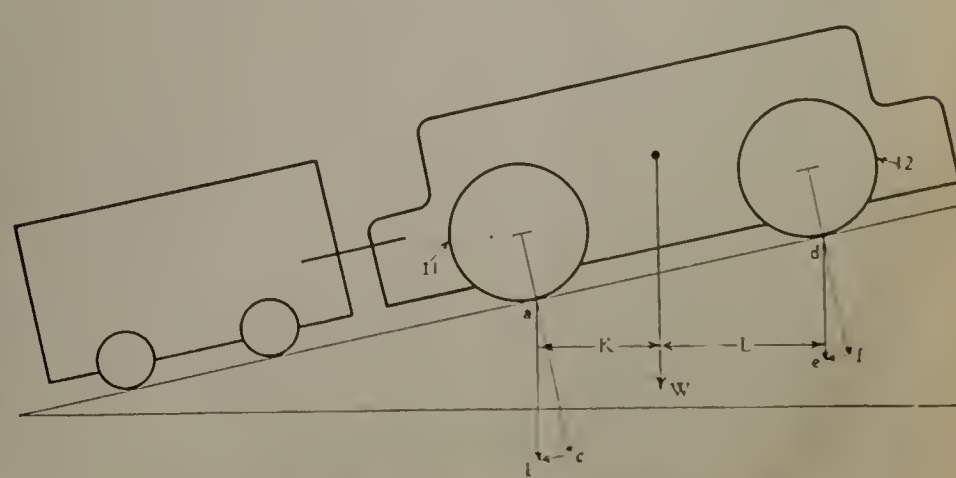

Fig. 3.—Mine Haulage Locomotive, Standing on Grade.

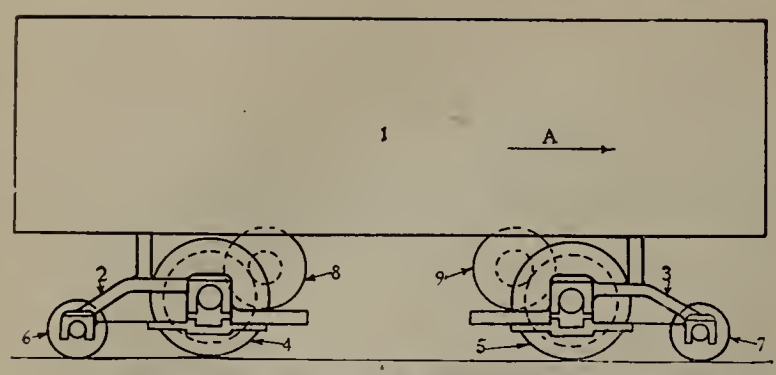

Fig. 4.—Outline of Maximum Traction Car Showing How Slipping of Driving Wheels Occurs.

motive and the inertia for any acceleration, but it must also actually lift the locomotive up the grade. The force expended in lifting the locomotive itself constitutes a loss of draw bar pull and this force produces no weight transfer. To prove this fact, consider the locomotive as a single unit of mass, standing at rest on the grade. The weight supported on the wheels *11* in Fig. 3 may be represented by $ab = L$, and the weight on the wheels *12* by $de = K$. Draw *ac* and *df* perpendicular to the rails and draw *bc* and *ef* parallel to the rails. Then *ac* and *df* represent the normal pressure on the rails, and *bc* and *ef* represent the reactions parallel to the rails "exerted at the points of wheel and rail contact" to the forces which hold the locomotive from running down the grade or to lift it up the grade. Since these reactions are exerted at the rail they can form no couple, as they are directly opposed to the forces which the rails exert on the wheels. Therefore, as stated, the forces which lift the locomotive up the grade produce no weight transfer.

If there is acceleration the analysis is the same as under Fig. 2. The method of calculating the weight transfer due to the tractive effort under the conditions of Fig 3 is therefore the same as that outlined under Figs. 1 and 2, except that the draw bar pull is decreased by the amount necessary to lift the locomotive, viz., 20 pounds per ton (2,000 lbs.) of locomotive weight for each per cent of grade.

Street cars equipped with maximum traction trucks give a very practical illustration of the slipping of individual pairs of wheels. A car of this description is outlined in Fig. 4. No exact details of motor mounting are given because, as before stated, such details have no bearing upon the immediate discussion to reduce the problem to its fundamental elements the discussion will be based on Fig. 5. In order to parallel the discussion under Fig. 1, assume that the motor car *1* is coupled to the trailer *2* and is exerting its maximum tractive effort at a standstill. The draw bar reaction on the motor car body is then represented by *B*, while *N* and P represent the center pin pull exerted upon the car body. Equilibrium of advance is expressed by the equation $B = N + P$, *N* and *P* being equal. If, as indicated, the draw bar and the center pins are not at the same level, there will be a transfer of weight from the truck *14* to the truck *15* represented by *R* and *S*. The value of the transfer is derived from the equation $B \times V = R \times T$, or $R = \frac{B \times V}{T}$, where *T* is the truck center distance. This value will usually be so small as to be negligible; *R* and *S* are equal as before. In each truck there is a transfer of weight from the leading to the trailing axle, the transfer being of the same value for each truck. In the arrangement indicated, however, it will be seen that the weight on the driving axle of the leading truck *14* is increased, while that on the driving axle of the trailing truck is decreased. It will be noted that $P = \frac{C}{2}$. The value of the transfer is derived from the equation $P \times W = Y \times Z$ or $Y = \frac{P \times W}{2}$, *X* and *Y* being equal as before. It is then evident that under the assumed conditions the driving axle of the truck *15* will be the first to slip, as the weight transfer *R* can not entirely offset *Y*, and in fact, in some cases (viz., where *B* is applied nearer to the rail than *N* and *P*) acts in conjunction with *Y* to hasten the slipping of the rear truck driving axle. The remedy is apparent, if the care is designed for operation in direction *A* only. Under such conditions the driving and idle axles of the truck *15* should be interchanged. The only weight transfer then tending to produce premature slipping is *R* which, as stade, is practically negligible. Again, however, it is evident that for double ended operation demanding maximum traction in both directions this would not be an operative arrangement.

In view of the discussion under Fig. 2 it will be sufficiently clear to state without further illustrations that under accelerating conditions with a car arranged as in Fig 5 there will be a weight transfer to the center pin of the truck *15* due to the inertia of

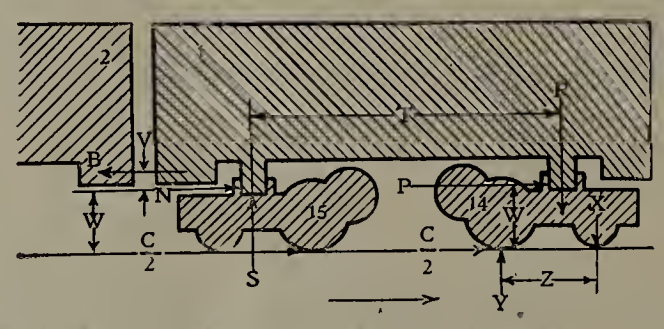

Fig. 5.—Diagram of Maximum Traction Car Exerting Draw-Bar Pull at Standstill.

the car body acting at its center of gravity. The arm of the inertia couple will be the vertical distance from the center pin to this center of gravity. There will also be in each truck a transfer of weight due to the inertia of the truck itself, which may be analyzed as outlined under Fig. 2.

In double truck locomotives designed for heavy pulling, the weight transfer can be reduced by transmitting the tractive effort directly through the truck frames instead of through the center pins and cab. Fig. 6 shows a locomotive of this description, this type being usually termed an "articulated truck locomotive." Under static pulling conditions each truck is subjected to the weight transfer due to the draw bar pull developed by its own motors, the pull of the leading truck, when the articulation link is at the same height as the couplers, being transmitted directly through the framing of the trailing truck without producing in it any additional weight transfer. The transfer produced is less than that existing when the couplers are mounted in the cab, because in heavy locomotives it is seldom or never practicable (for structural reasons) to locate the center pin as close to the rail as the standard M. C. B. coupler height. Under accelerating conditions the weight transfer due to inertia can be derived from the methods outlined under Fig. 5.

In the more complicated wheel arrangements existing in many locomotives the same general principles apply. There is one additional feature, however, which must be taken into consideration, viz., the equalizing system. Instead of taking the distance between the axles that may be under consideration as the arm of the transfer couple it is necessary to employ the distance between the centers of the equalization. This is outlined in Figs. 7 and 8. The wheels *1* and *2* are equalized together, as are also the wheels *8* and *9*. The weight of the locomotive body is ap-

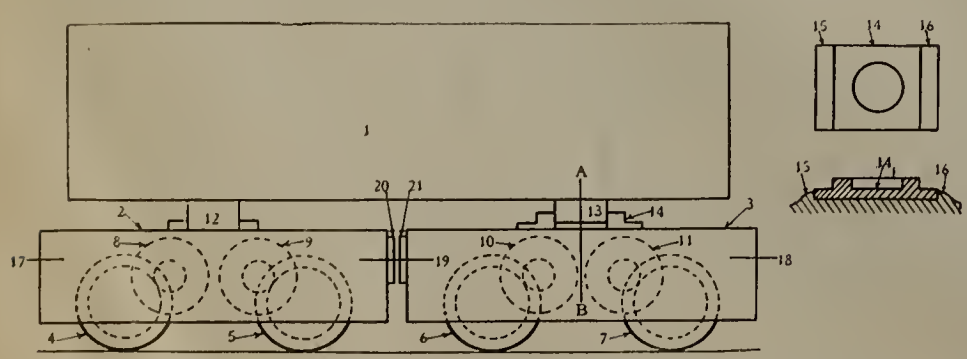

Fig. 6—Articulated Truck Locomotive In Which Tractive Effort Is Transmitted Through Truck Frames.

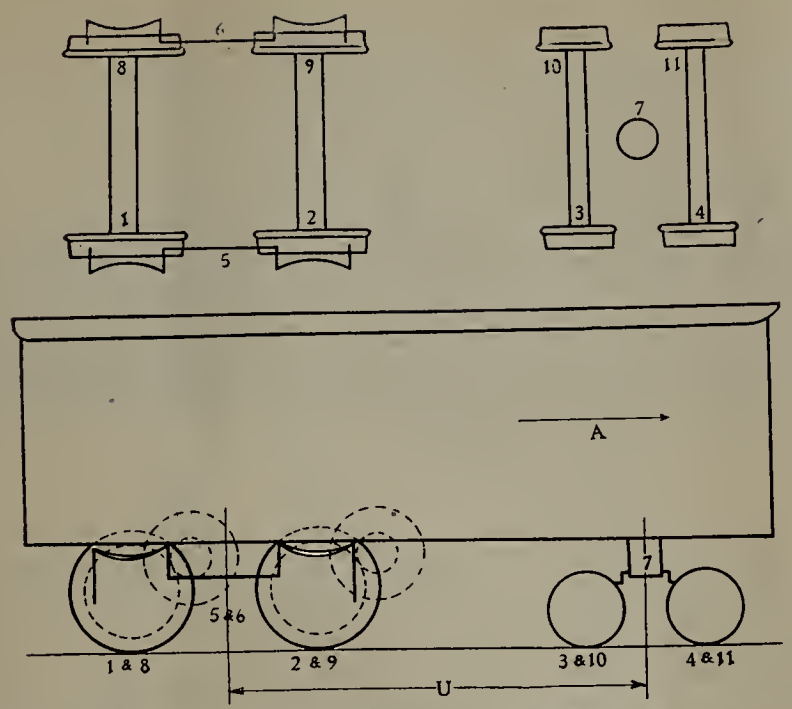

Figs. 7 and 8.—American Type Locomotive, Showing Relation of Equalization to Weight Transfer.

plied to the truck at the center pin and the truck is so constructed that an equal weight is carried by each of the wheels *3, 4, 10* and *11*. In this case the centers of equalization are *5, 6* and *7*, and the arm of the transfer couple is *U*. In the case illustrated in Figs. 7 and 8 with advance in the direction *A*, an an equal amount of weight is removed from each of the wheels of the leading truck and a like amount is added to each of the drivers.

It is entirely possible to reach the results derived by the methods outlined in the preceding discussion by an analysis of all of the internal forces exerted by the various elements of a particular machine that may be under investigation. Such an analysis is essential for a proper proportioning of the various details of the structure. The analysis is, however, rather complicated with corresponding liability for error and it is always advisable to check the accuracy of the results thus obtained by the sole consideration of external forces.

NEW BETTENDORF STEEL CAR PLANT.

The steel car plant at Bettendorf, Iowa, which was built in 1902 has, in the past two years, been enlarged to such an extent that the original plant is only a small corner of the present one. The tract for the old plant covered 40 acres, while the factory grounds now cover an area of 100 acres, and the buildings have an aggregate area of 800,000 sq. ft., or 18 acres under roof. The drawing showing the arrangement of the plant gives an idea of its size and arrangement as it now stands, and the photographic views serve to illustrate to some extent the character of the buildings and some of the equipment.

The original shop is a brick structure 700 ft. x 240 ft., and in the recent improvements there has been added to it a main fabricating and erecting shop 1,400 ft. x 255 ft. x 60 ft. high, which is of steel frame and brick construction, thus making one building 2,100 ft. x 255 ft. In addition to this there has been erected a 540 ft. x 440 ft. steel froundry arranged with wings on the bays. This set of buildings covers 160,000 sq. ft. and lies directly east of the main shop. The engine and pump house, located south of the main shop, is 220 ft. x 50 ft. The boiler house is 80 ft. x 50 ft., and is located directly south of the engine and pump house. East of the engine room is the machine shops, 380 ft. x 50 ft., and the storehouse, 320 ft. x 160 ft.

The boiler house is equipped with four vertical water tube boilers, and two more may be added to meet the demands of the growing business. These boilers are equipped with

Foundry Office, Bettendorf Axle Co.

automatic chain grate stokers, economizer and a conveying equipment, with automatic coal weighing hoppers, that will handle the coal and ashes. The engine house contains two duplex fire pumps having a total capacity of 2,000 gals. per min. Six hydraulic pumps are provided, giving a pressure from 350 to 3,000 lbs. per sq. in., and having a capacity of 1,230 gals. per min. These pumps supply the hydraulic presses throughout the plant and are governed by three weighted and two actuated accumulators, the last two being designed and built by the Bettendorf company to suit the requirements of the plant. Compressed air is obtained from three compressors having an aggregate capacity of 3,400 cu. ft. of air per min. Electric power is obtained from an exhaust steam turbine direct-connected to a 500-k.w. direct-current generator, as described in the Railway Age Gazette of March 3, and from two tandem compound engines each direct-connected to a 100-k.w. direct-current generator. There are are also generator and dynamo sets for lighting the streets and homes in the town of Bettendorf. From the power plant extends a large 1,263 ft. concrete tunnel carrying the hydraulic, air power lines and the electric conductors to the foundry. Another tunnel carries the hydraulic, air and oil lines to the main shop where they are placed overhead and tapped at the various presses and machines.

The main shop in which the underframes and cars are made is equipped with 15 electric traveling cranes of 3 to 10-ton capacity, having approximately 60 ft. and 70 ft. spans. The old part of this building, or the original shop, is divided into five bays, the two south bays being devoted to the manufacture of bolsters and the two north bays for the manufacture of small car parts and truck spring plants. One end of the center bay is used principally for storage and the other end for the assembling and manufacture of underframes. At this end of the center bay and connecting it to the new addition is a transfer bay equipped with necessary appliances (cranes, magnets, etc.) for distributing material from the old shop to the four bays of the new addition. The two north bays in the new addition are used for the fabrication and erection of underframes and steel cars. The south center bay is used for the application of floors and sides to the underframes and the south bay for the storage of small car parts and specialties. There are 39 hydraulic presses in this shop, ranging in capacity from 50 to 2,500 tons, which were especially designed and built by the Bettendorf Axle Co. to meet the requirements of the Bettendorf construction. Near the center of the two north bays are located a series of subways for assembling and riveting the underframes, which is done by means of compression gap riveters, above which are located electric or air hoists suspended from small overhead cranes or trolleys for handling the heavy sills, etc. Numerous Bettendorf low pressure air furnaces are used to heat the rivets and other materails requiring hot shaping. Running through this shop longitudinally are eight standard gage tracks connecting with the various yard tracks. Two locomotives and three locomotive cranes are used for transportation of material over the tracks at this plant, which have a total length of eight miles.

The Bettendorf underframes for freight cars, of which there are 45,000 now in use, are made in this shop; all have their longitudinal sills continuous from end to end. They are made from commercial rolled shapes and have attached to them the draft sills in which the necessary draft gear stops, lugs and pockets are cast integral. This gives better alinement and eliminates the possibility of shearing draft gear stop rivets. These underframes have also continuous end sills, body bolsters and needle beams which pass directly through the center sills, transmitting the load on the cross

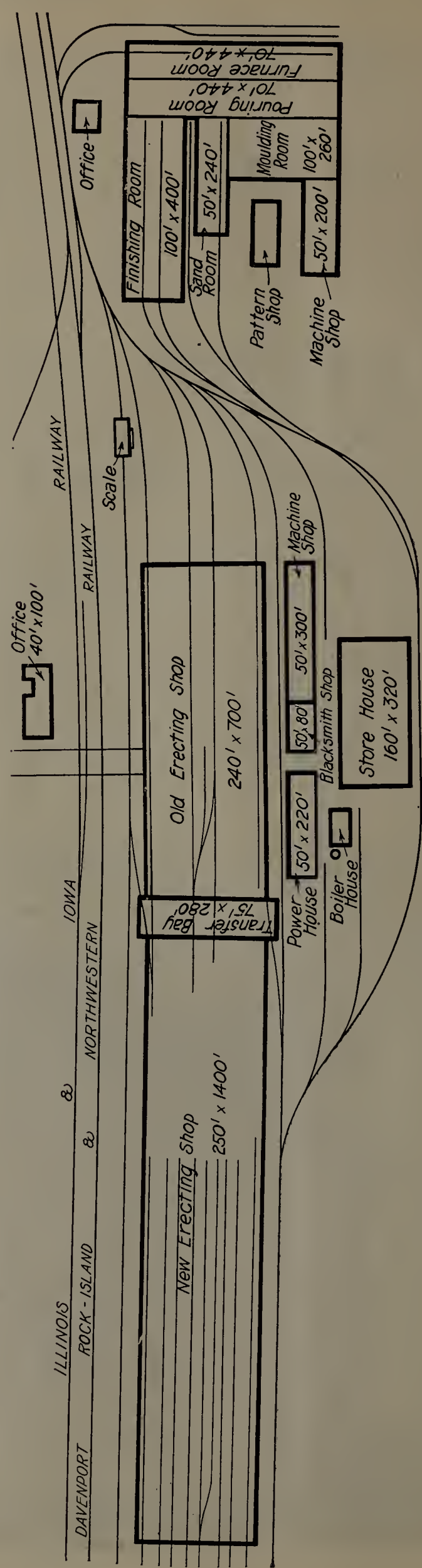

General Layout of Bettendorf Axle Plant.

New Bettendorf Steel Car Plant, Bettendorf, Ia.

members directly to the center sills and from member to member without depending on the medium of rivets and gussets to sustain the load. Rivets and gussets are used only to hold the various members in position, thereby reducing the weight and number of parts and making inspection, repairs and painting less difficult. Complete gondola, flat and tank cars are made in this shop and are designed in the same manner as the underframes, their respective members transmitting the load from member to member directly. The Bettendorf I-beam bolsters are also made here, and like the other products of the plant are made from commercial rolled beams shaped cold, in specially designed hydraulic presses, to prevent forging stresses, and to which, after shaping, are riveted the necessary cover plates, side bearings, column guides, and center plates. There are over half a million of these bolsters in service. Since the erection of the steel foundry the Bettendorf Axle Company is prepared to furnish either the built-up bolster or those made of cast steel.

Aside from the specialties described above, this concern is gradually drifting into the manufacture of cars in their entirety. An all steel box car was built and is now being tried out in service. In each design the effort is made to eliminate most of the objections to steel superstructures which have so frequently been raised. This company has also designed several other kinds of cars for special service and is prepared to design and build any type of freight car demanded by the railways. Sills, etc., are shaped cold in hydraulic presses to prevent internal forging stresses and are punched and sheared in such a manner that one sill is completed in two strokes of the press, which insures perfect alinement of all holes. The necessity of drifting and reaming, to make rivet holes match, is thereby eliminated and the fractures in metal caused by drawing up are prevented.

Annealing Furnaces, Bettendorf Steel Foundry.

All sills are interchangeable with no variation in the spacing of holes. These sills are handled between machines by powerful lifting magnets and are fed into the presses by compressed air handling, turning and feeding trucks especially designed by the company.

The main machine shop is devoted entirely to the building and repairing of the hydraulic presses, machines and the elaborate dies used in the presses throughout the plant. It is a well equipped, up-to-date and strictly modern shop equipped with motor-driven tools, such as planers from 28 in. x 28 in. x 5 ft. single head to 48 in. x 50 in. x 20 ft., with 40 ft. bed open side, double head; lathes from 18 in. x 8 ft. to

Bettendorf Steel Foundry.

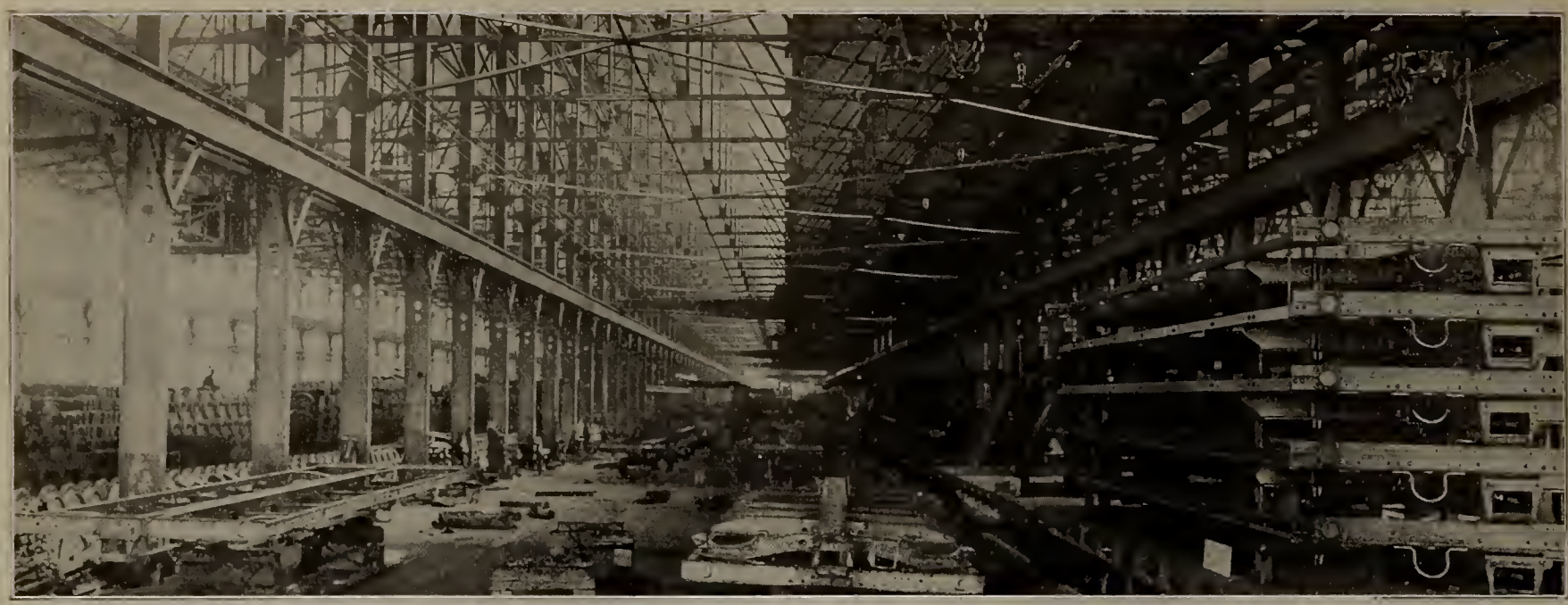

Painting and Loading Department for Steel Underframes, Bettendorf Steel Car Shop.

Sand Mixer and Conveyor, Bettendorf Steel Foundry.

One-Half Erecting Bay, Bettendorf Steel Car Shop.

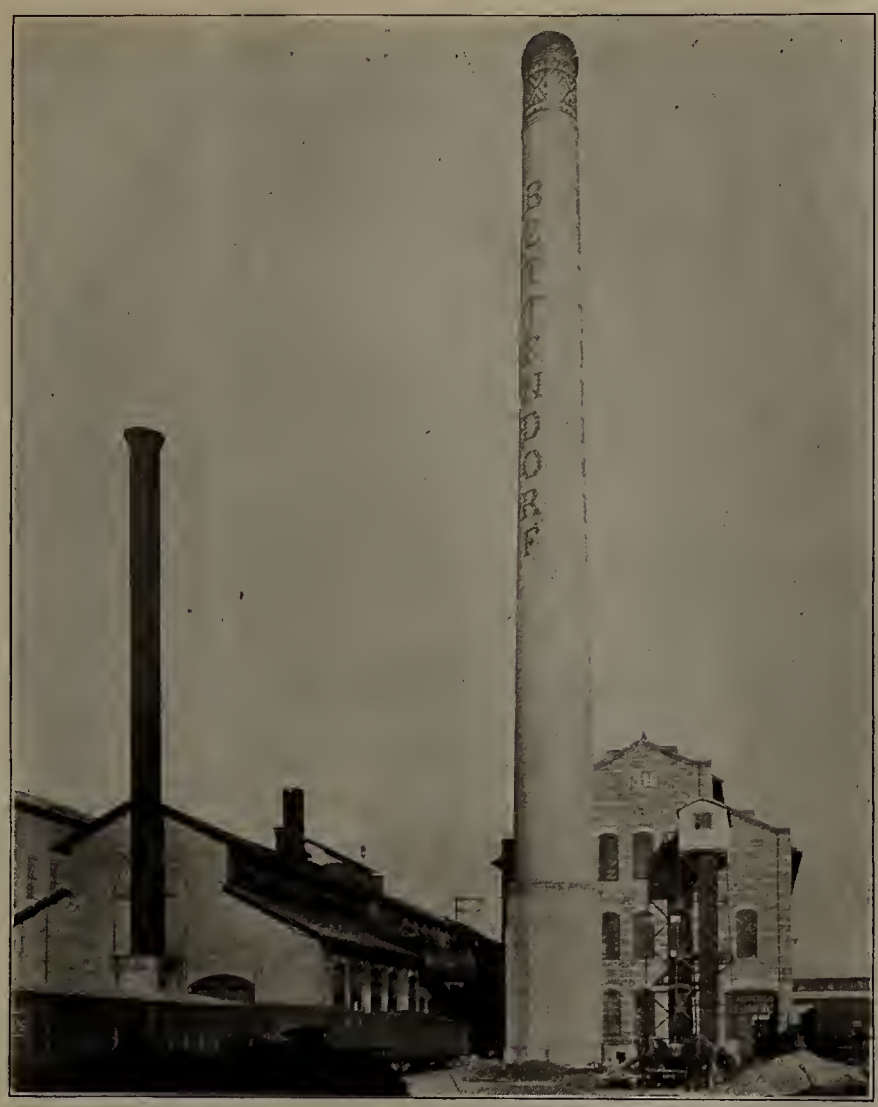

Boiler and Engine Houses.

32 ft. x 16 ft.; 2 in. and 3 in. turret lathes; 4 ft. 6 in. to 6 ft. radial drills; 18 in. and 24 in. crank shapers; saws; and bolt cutting machines; also drill presses of various sizes. To assist in setting the work a 5 ton 49 ft. span traveling electric crane is employed. The blacksmith shop is used exclusively for making and trimming shop tools and is a well equipped modern shop with the necessary forges, hammers, press and hardening furnaces with electric pyrometers as well as a bolt and rivet heading machine. This shop is located in the machine shop building and occupies 80 ft. of the 380 ft. shop. The electrical department, which is located within the main shop, is well equipped and affords facilities for winding and baking armatures and field magnets and repairing motors.

The steel foundry, located directly east of the main shop, is a steel brick structure divided into wings or bays and designed to permit of ample enlargement. It was commenced in 1909, and the first heats were taken from the furnaces in the summer of 1910. The furnace bay, 70 x 440 ft., is equipped with two 5-ton, 70 ft. span, electric traveling cranes for handling molds and castings; one 3-ton electric traveling wall crane; one 35-ton, 70-ft. span ladle crane with a 35-ton main hoist and a 5-ton auxiliary hoiist and two 3-ton jib cranes for handling the furnace spouts. Through this department is a continuous sand conveyor for handling sand and conveying it to the sand mixers in the sand room. The two molding rooms, each 260 ft. x 50 ft., are equipped with two 5-ton, 48 ft. span, electric traveling cranes and miscellaneous jib cranes, pneumatic ramming tools, Bettendorf molding machines and core machines, and a continuous sand conveyor delivering sand at the various machines from the sand mixer. The sand room, 240 ft. x 50 ft., is equipped with concrete bins for sand storage, one 5-ton, 48-ft. span, electric crane with ½ yard grab bucket, two 25-ton continuous heavy sand mixers and two 15-ton facing sand machines. The annealing and chipping rooms, arranged in two bays each 400 ft. x 50 ft., are equipped with two continuous annealing ovens of the Bettendorf design which greatly expedite the process and render castings of a uniform quality. A Bettendorf hydraulic press, of 775 tons capacity and specially designed for this service, is used to straighten and test truck frames to insure perfect alinement. Five ton, 48-ft. span, electric traveling cranes are used to carry castings to the various parts of these departments and for loading castings on cars.

A metal pattern and machine shop, 200 ft. x 50 ft., occupies another bay of this structure and is equipped with the necessary up-to-date motor driven tools to build and repair the metal patterns, molding machines and other machinery used throughout the foundry. In another bay, 140 ft. x 50 ft., is the wood pattern shop on the upper floor, equipped with motor driven, automatic start and stop planer, joiner, pattern grinder, saw tables, band saw, lathe, and revolving oil stone. On the ground floor of this building is a well arranged locker room, lavatory and swimming pool for the convenience of the employees.

In this foundry are produced the Bettendorf one-piece cast steel truck frames, with the arch bars, columns and journal boxes cast into one piece, thereby producing a truck having a low cost of maintenance, light weight due to reduction in number of parts, great strength, and flexibility due to the method of tying the two frames of the truck together, they being tied by means of a spring plank with the pivot connections at the side frames, which renders the truck free to adjust itself to track irregularities. There are now about 250,000 of these truck frames in service, and they are guaranteed against failure by breakage. On account of their simplicity, and the great reduction in the number of pieces, the cost of repairs is much less than that of the arch bar or trucks of other designs using more pieces. The Bettendorf cast steel center sill ends are also produced here and possess that peculiarity so common to the Bettendorf construction—reduction in the number of parts and weight, together with increased strength.

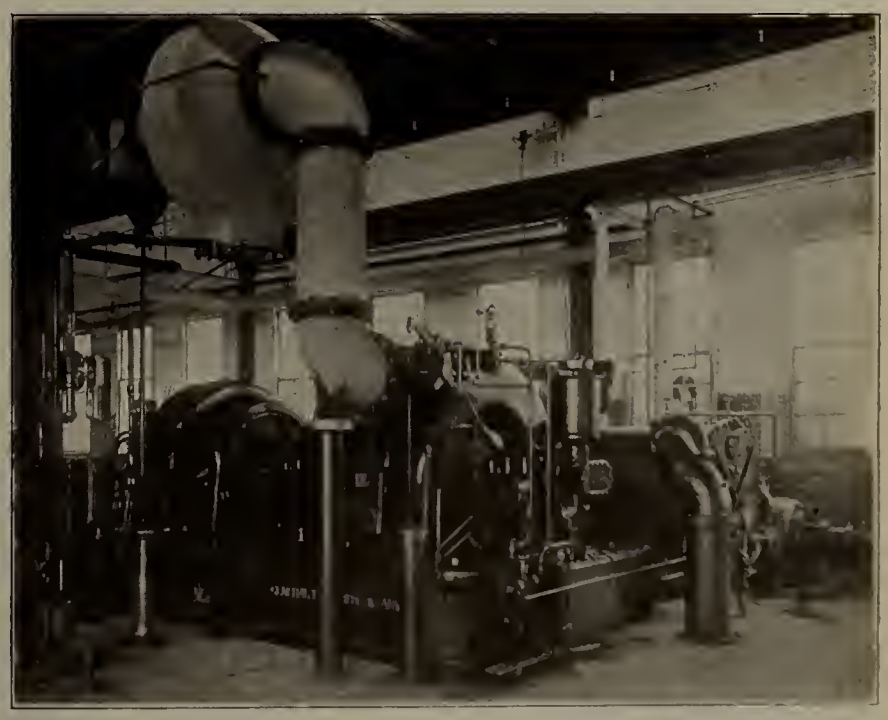

Power House Showing Turbine.

TESTS OF DYNAMITE.

Frozen dynamite is the subject of grave suspicion among most engineers, yet experts hold that it is far less sensitive than unfrozen dynamite. In order to prove this, Dr. Walter G. Hudson and Mr. E. J. Riederer, the latter superintendent of the Du Pont works at Lake Hopatcong, conducted some experiments on Feb. 24 that are decidedly interesting. They were made with a particularly sensitive grade of 60 per cent gelatine dynamite and also with some straight dynamite. A number of these sticks were used as targets for bullets from a Krag-Jörgensen government rifle, loaded for a velocity

Pouring Room in Bettendorf Steel Foundry for Truck Sides.

of 2,150 ft. and fired at a distance of 50 ft. from the dynamite. The bullets discharged in this way failed in every case to explode the sticks of frozen, straight and gelatine dynamite. Other frozen sticks were then thawed and used as targets in precisely the same way. In every case the bullets detonated them, thus showing the decreased sensitiveness due to freezing. The same thing was shown in another way by using thawed sticks which were broken in two. If a cap

Pattern Shops, Bettendorf Axle Co.

2,500-Ton Hydraulic Press for Center Sills, Bettendorf Steel Car Shop.

with 30 gr. of fulminate of mercury was attached to half of a thawed stick and the other half was placed 8 ins. from it, the latter would be exploded when the former was fired. If, however, a whole stick of frozen dynamite was placed

Machine Shop, Bettendorf Steel Car Plant.

8 in. from a half stick of thawed dynamite and the latter was fired the frozen stick remained unaffected. In fact, it was not until the frozen material was placed within 1 in. of the piece fired by the cap that it could be exploded. When sticks of frozen and of thawed dynamite were blown into the air with black powder it was found that the former took about three times as long to burn as the latter. Tests of this character seem to prove that frozen dynamite is not sensitive, yet even when it has been benumbed by the cold it should be handled with great care. It is best not to become familiar and careless with anything of such a violent temperament.—Engineering Record.

Personals

C. H. Montague has been appointed master mechanic of the Quincy, Omaha & Kansas City, with office at Milan, Mo., succeeding A. W. Quackenbush.

G. J. Duffey, assistant master mechanic of the Lake Erie & Western, the Fort Wayne, Cincinnati & Louisville and the Northern Ohio, at Lima, Ohio, has been appointed master mechanic, with office at Lima, succeeding F. H. Reagan, resigned.

T. A. Lawes, master mechanic of the Chicago, Terre Haute & Southeastern at Terre Haute, Ind., has been appointed mechanical engineer of the New York, Chicago & St. Louis, with office at Cleveland, Ohio, succeeding L. B. Moorehead, resigned.

G. C. Nichols has been appointed master mechanic of the Jonesboro, Lake City & Eastern, with office at Jonesboro, Ark.

F. H. Reagan has been appointed superintendent of the Scranton locomotive shops of the Delaware, Lackawanna & Western.

Frank J. Smith, for the past eleven years master mechanic of the Baltimore & Ohio Southwestern, with offices at Chillicothe, Ohio, and Washington, Ind., has been appointed master mechanic of the Chicago Great Western, with headquarters at Stockton, Ill.

C. N. Page, trainmaster of the Lehigh Valley, at Auburn, N. Y., has been appointed also master mechanic, with office at Auburn, succeeding J. N. Mowery, resigned.

R. L. Doolittle, master mechanic of the Atlanta, Birmingham & Atlantic, with office at Fitzgerald, Ga., has been appointed superintendent of motive power, a new position, and his former office has been abolished.

A. C. Adams, superintendent of motive power of the Spokane, Portland & Seattle, has been appointed superintendent of motive power also of the Oregon Electric and the United Railways Co., with office at Portland, Ore.

T. A. Lawes.

W. C. Loree.

F. J. Smith, M. M., Chi. Gt. Western Ry.

W. C. Loree, superintendent of the Baltimore & Ohio, at Pittsburgh, Pa., has been appointed general manager of the Cincinnati, Hamilton & Dayton, with office at Cincinnati, Ohio. E. A. Peck, superintendent of the Pittsburgh division of the Baltimore & Ohio, succeeds Mr. Loree, with office at Pittsburgh, Pa.

F. Hume has been appointed superintendent of machinery of the Fort Dodge, Des Moines & Southern, with office at Boone, Iowa.

P. H. Rephorn, general foreman in the motive power department of the Delaware, Lackawanna & Western, at Scranton, Pa., has resigned to go to E. L. Post & Co., New York.

E. F. Potter, general superintendent of the Chicago division of the Minneapolis, St. Paul & Sault Ste. Marie, has been appointed assistant to the general manager, with office at Minneapolis, Minn., and his former position has been abolished.

E. S. Koller, division superintendent of the Chicago, Burlington & Quincy at McCook, Neb., has been appointed general superintendent of the Illinois district, with office at Galesburg, Ill., succeeding Hale D. Johnson, deceased. E. Flynn, superintendent of the Omaha division at Omaha, Neb., succeeds Mr. Koller, and A. G. Smart, trainmaster at McCook, succeeds Mr. Flynn.

Sydney B. Wight, purchasing agent of the New York Central Lines at New York City, has been appointed general purchasing agent, succeeding F. H. Greene. W. C. Bower, chief clerk in the office of the president, succeeds Mr. Wright, with office at New York.

A FIREMAN'S RECORD.

One of the Lake Shore's Pacific type locomotives, weighing 266,000 pounds, hauling the westbound Twentieth Century Limited with seven cars in the train on a test run December 5, 1909, made the run between Toledo and Elkhart in 2 hours and 4 minutes at an average speed of 65 miles per hour. In this short time 8¾ tons of coal were shoveled into the firebox. The average scoop used on a locomotive holds 14 to 15 pounds of coal. Taking the latter figure as the average scoop load the fireman had to reach out into the tender, a long stretch, get a shovel full of coal, swing it around and throw it into the firebox, not anywhere, but on the particular spot on the 56½ square feet of grates that happened to need it most at that instant, every 6.3 seconds from start to finish. This is the most remarkable feat of firing for which authoritative figures are available, and it may also be submitted as a marvelous feat of endurance.—Technical World.

APPRENTICE SCHOOL, PENNSYLVANIA R. R.

Unique among railroad schools in America is one for apprentices which has been established at Altoona, Pennsylvania, by the Pennsylvania R. R., co-operating with the Engineering School of the Pennsylvania State College. This school is for the benefit of regular apprentices in the railroad shops at Altoona. The object of the school is to give to apprentices a knowledge of the fundamentals of mathematics, mechanics and drawing, thereby making them better artisans —men more useful in their specific trades. The large attendance shows that the men are eager to make the most of the opportunities open to them, and the company is more than rapaid by the actual increase in the efficiency of its workmen, and by the assurance of unswerving loyalty from the men who have received all their training in its service.

Departing from the general practice in institutions of this nature, which is to teach only technical subjects, systematic work in English is carried on with special reference to writing business letters, filling out order blanks, time cards, and other details. The work is arranged to cover three scholastic years of forty-two weeks. Each apprentice receives four hours of instruction a week, or a total of 504 hours for the three years. The subjects given include essential elements of many of those in the mechanical engineering course of the best universities; they are mathematics, physics, mechanical drawing, mechanics, mechanism, strength of materials, machine design, experimental tests and shop management.

A monthly report of grades is made out by the head instructor and submitted to the general office of the company and to the Pennsylvania State college. These monthly reports, with the annual reports concerning each member of the classes, when taken in connection with the regular records of the shop foremen, form an accurate basis on which to select and use the men to the best advantage.

Among The Manufacturers

GOETZE GASKETS.

The leaks in flange joints, unions on steam boilers, steam engines, steam pipes, apparatus, etc., are partly due to a faulty construction of the joints or couplings, insufficient strength of the flanges and covers, imperfect, rough, very uneven, deeply corroded surfaces, or the said surfaces being out of parallel. An insufficient number of coupling screws, or the placing of same at uneven distances or too far from each other, may likewise cause leaks. Leaks may furthermore be caused by rigid piping, i. e., piping which cannot sufficiently expand and contract, as well as by piping and other appliances which do not have a sufficient slope to allow the condensed water to run off, are consequently subject to water-hammer and the excessive pressure resulting therefrom. The chief cause of leaks is to be found in the use of packing material incapable of continuously withstanding the influence of high temperature, steam, water, high-pressure gases and acids.

The Goetze copper and metal gasket here illustrated provides a packing material which, the manufacturers state, is so arranged as to present a surface that conforms to every irregularity in the flanges, while effectively resisting high pressure and temperature. The Goetze elastic corrugated copper gasket with asbestos lining is shown in Fig. 1. It is made of chemically pure copper and best asbestos. Only a few turns on the flange bolts bring each copper corrugation snugly against the flange surface and at the same time crowd each wall of asbestos against the same surface.

Through the use of elastic copper and metal gaskets on flange joints it has become possible, it is said, to use long-distance conduits for steam under presure exceeding 15 atmospheres, the joints being thus kept tight for a number of years. The Goetze copper valve disk with asbestos inlaid is shown in Fig. 2. This disk, the manufacturers state, is something having all the elasticity needed for tight closing and with great durability even under the most unfavorable conditions. All sizes suitable for Jenkins valves and other valves of similar construction are kept in stock.

"Goetzerit" Sheet Packing.

In spite of the advantages of copper and metal gaskets, there are those who wish to cut their own packings from a sheet, or who for some reason do not want a metal or shaped gasket. For such, "Goetzerit" sheet packing may be em-

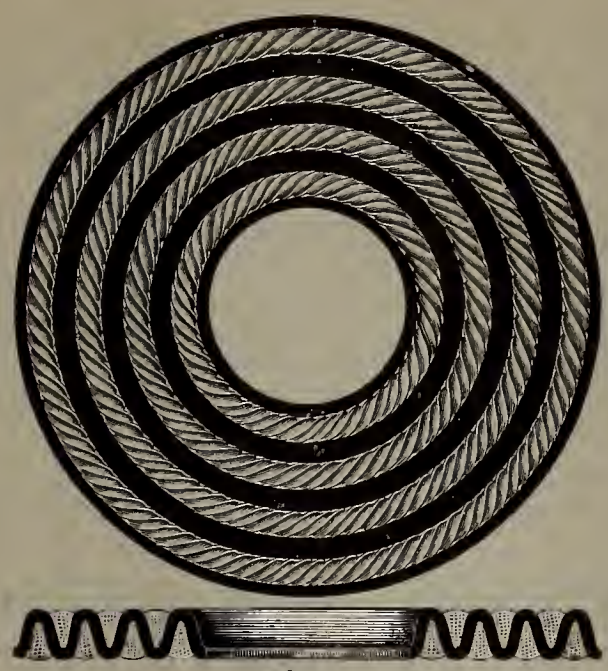

Fig. 1.

ployed. It is made in both red and white from asbestos fiber, compressed under an exceedingly high pressure, impregnated with a substance which, it is claimed, makes it absolutely proof against the action of superheated and saturated steam. "Goetzerit" white packing is especially recommended for oils, benzine, petroleum acids, ammonia, gas, alkaline products, etc. It does not squeeze out and narrow the inside diameter of the piping and cannot be blown out, it is said, even at the high steam pressure now in use. "Goetzerit" red packing is made in any desired thickness in sheets 36 inches square. The white is made in sheets 45 inches square. Ready-made "Goetzerit" gaskets for standard and extra-heavy flanged fittings of from 1 to 24 inches are also made.

Another kind of packing is known as "Self-Lubricating" high-pressure packing. It is equally adaptable for saturated and superheated steam, and for hot and cold water. It is impregnated by an infusible fat which stands against heat and is said to have practically inexhaustible lubricating ability. It is prepared for all kinds of stuffing boxes and is manufactured in sizes from ¼ to 2 inches square. These packings are manufactured by the American Goetze Gasket & Packing Company, New Brunswick, N. J.

LAMB PORTABLE DRILL.

The use of large portable drills is hard on the workman and in many cases it is difficult to retain the drill in the proper position. The illustration shows a portable radial drill which overcomes these difficulties and which should prove very useful about the shop, especially for drilling in close quarters and in awkward places. The power is furnished by the small motor at the top, which is equipped with two speeds of 165 and 230 R. P. M. respectively, and is made for either 110 or 220 volts, direct or alternating current. The column, which is made of steel tubing, has a three-legged base provided with slots by means of which it can easily be clamped into place. The drill may be rotated

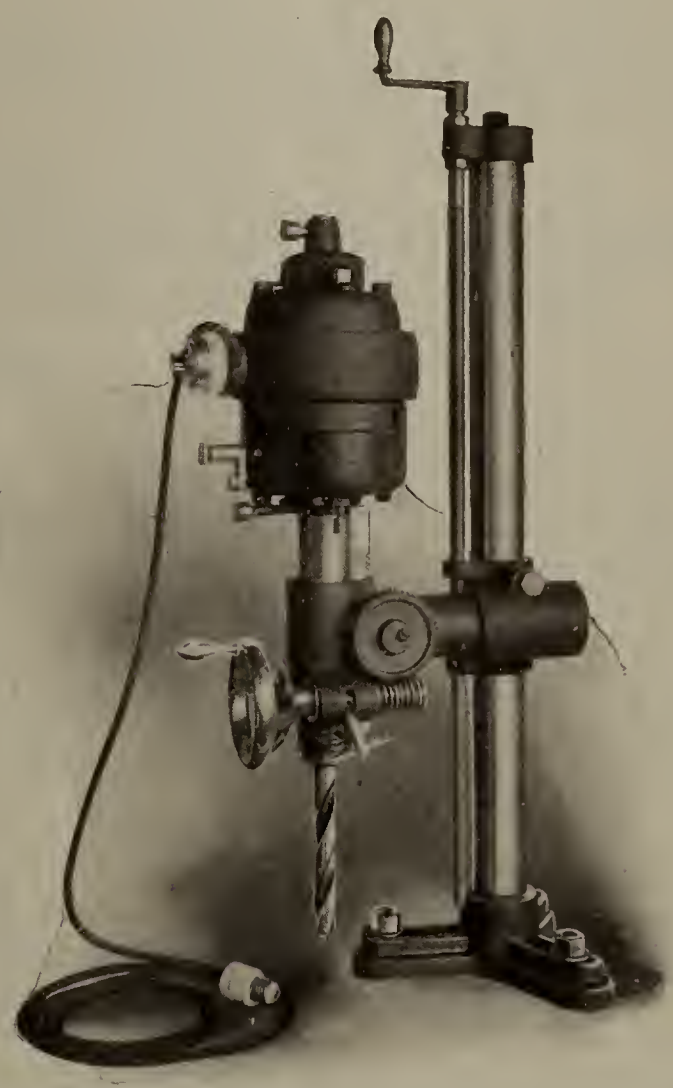

Lamb Portable Drill.

about a horizontal axis as well as about the column and has a vertical movement of about 28 inches, thus making it very easy to place the drill in any desired position. The spindle has a travel of 5 inches, a No. 3 Morse taper, and any sized drill up to 1 inch may be used. The feed is operated by a rack and pinion, which in turn is operated by a worm and gear and is furnished with a quick return. The drill is manufactured by the Lamb Electric Co., of Grand Rapids, Mich.

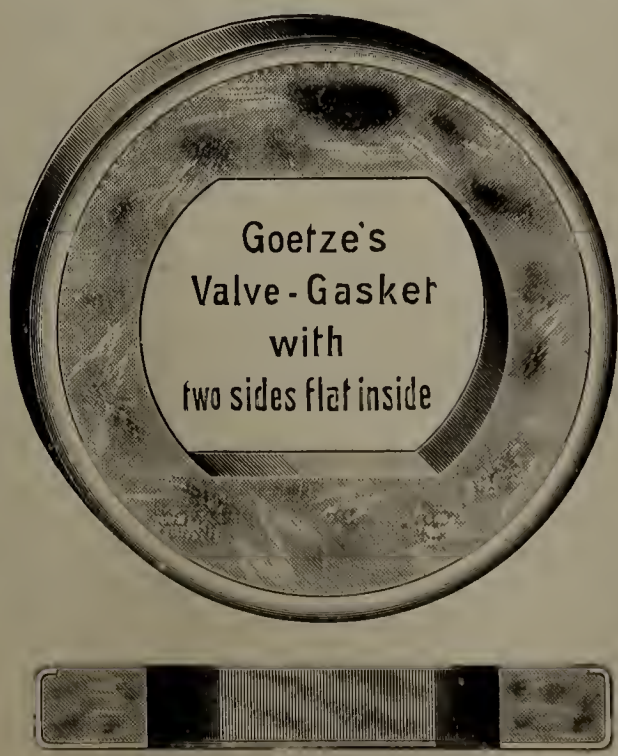

Fig. 2.

New Literature

The Smooth-On Mfg. Co. of Jersy City, N. J., has issued a booklet showing a few of the many uses to which this concern's product is put.

* * *

The Philadelphia interlocking and roller bearing car pivot is an improved pivot plate which tends to eliminate friction and accidents. It is well described in a recent publication of the King Fifth Wheel Company of Philadelphia.

* * *

The International Acheson Graphite Company of Niagara

Falls, N. Y., has issued a booklet setting forth their products which are Acheson graphite and various combinations of this graphite with oil and grease. It contains considerable of interest concerning this power of lubricant.

* * *

Monel metal is said to be stronger than steel and less corrodible than bronze, and in sheet form has been used on the new North-Western terminal at Chicago. It is described in a recent booklet of the Bayonne Casting Company of Bayonne, N. J.

* * *

C. E. Sargent, a specialist in mechanical engineering problems, has issued a booklet showing a few of the special machines and designs which he has worked out for various firms.

* * *

Bulletin Number 1042 of the Allis-Chalmers Company, of Milwaukee, Wis., is devoted to generating sets composed of Allis-Chalmers generative and "A B C" engines. It is up to the usual high standard of these bulletins.

* * *

The Milwaukee Locomotive Manufacturing Company of Milwaukee, Wis., has issued bulletin 101, which is descriptive of gas driven locomotives for mining and industrial use.

* * *

W. N. Best, engineer in Calorics, of New York, has published a pamphlet of special devices and apparatus for use in connection with liquid fuel furnaces. Descriptions are given of a number of special oil and tar burning furnaces.

* * *

The Farwell gear hobber is completely described in circular 805 of the Adams Co., Dubuque, Iowa. The fore-word says "A line of hobbers that we are glad to put in beside other types of gear cutters on a guarantee that they will produce the biggest days work."

* * *

Burton W. Mudge & Company of Chicago has issued a handsome example of catalogue work which deals with Garland car ventilation. It contains some thirty-five pages and many excellent illustrations. Both passenger and refrigerator car ventilation are dealt with.

Industrial Notes

Ezra Hounsfield Linley, of St. Louis, president of the E. H. Linley Supply Co., of that city; president of Wm. Jessop & Sons Steel Sales Co., of St. Louis, and a director of Wm. Jessop & Sons, Ltd., Sheffield, England, died in St. Louis on March 9. Mr. Linley was born in Sheffield, England, in 1841, and since 1872 was the St. Louis agent for Jessops. For a number of years he was actively engaged in the Railway Supply business, and in 1897 organized the E. H. Linley Supply Co. Mr. Linley was well known and highly esteemed in the trade, and had many friends in America and in England.

Mr. J. Fremont Murphy, mechanical expert, whose office has been in the Hudson Terminal building, New York City, has associated himself with the Hobart-Allfree Co., 1380 Old Colony building, Chicago, and will devote his entire attention to the Allfree system of steam distribution as applied to locomotives. Mr. Murphy was for many years connected with the American Locomotive Co., as mechanical engineer and later as superintendent of the Cooke works at Paterson, N. J., and is, therefore, thoroughly conversant with modern locomotive design and methods of construction.

Mr. Theodore L. Condron, 1214 Monadnock block, Chicago, has announced that he will continue under his own name the engineering practice lately carried on by "Condron & Sinks," Mr. Sinks having withdrawn to locate in Seattle, Wash.

The completion of the new building for which ground was broken last week will add 8,000 square feet of floor space to the Willard Storage Battery Company's plant at Cleveland, Ohio. The building will front on Marquette road and is being built to take care of the company's rapidly increasing business.

The Okadee Company has been organized and has taken offices at 735 Old Colony building, Chicago. The company will manufacture and sell the "Okadee" blow-off valve and other railway devices which have been O. K.'d by railway officials. The officers of the company are A. G. Hollingshead, president and manager, and Horace L. Winslow, vice-president and treasurer.

Attention is called to the fact that W. J. Fauth, 310 Monadnock block, Chicago, is representing the Concrete Form & Engine Co., in northern Illinois and southern Wisconsin. This company manufactures a line of two cycle gasoline engines which are particularly adapted for installation on track velocipedes and section hand cars.

The American Electric Railway Manufacturers' Association, George Keegan, secretary, announces the opening of an office at 165 Broadway, New York City. This office will be the headquarters of the association, and out of town members are invited to use the rooms for the receipt of their mail and for carrying on correspondence, while in the city.

H. E. Creer, formerly general car foreman of the Missouri Pacific Ry. at Atchison, Kansas, and general car foreman of the Pere Marquette R. R., in charge of the Grand Rapids and Detroit districts, has accepted service as mechanical expert with McCord & Company, succeeding the late D. J. McOscar, who died on December 22nd last. Mr. Creer's headquarters will be at the Chicago office in the People's Gas Building.

Frank H. Greene, general purchasing agent of the New York Central Lines, has resigned to become president of the Hale & Kilburn Manufacturing Company, Philadelphia, Pa.

The annual report of the Railway Steel-Spring Company, New York, for the year ending December 31, 1910, shows that gross sales were $10,035,435, an increase of $2,192,143 over 1909. The surplus, after fixed charges, was $810,077, or 6 per cent on the $13,500,000 common stock, as compared with 5.32 per cent earned on the same stock in 1909. At the annual meeting Otis H. Cutler, president of the American Brake Shoe & Foundry Company, Mahwah, N. J., was elected a director to succeed the late Frank S. Layng. The officers of the company and the other directors were reelected.

The annual report of the Cambria Steel Company, Johnstown, Pa., for the year ended December 31, 1910, shows that the earnings or income from operation, after all expenses incident to same (including those for ordinary repairs and maintenance) had been deducted, added to other income was $5,461,336 in 1910, compared with $3,329,849 in 1909. The net income was $4,553,332 in 1910, compared with $2,538,087 in 1909. The dividends paid out in 1910 were $2,250,000, compared with $1,800,000 in 1909. The balance carried to profit and loss was $113,294 in 1910, compared with $38,087 in 1909.

The Consolidated Concrete Tie Company, Cairo, Ill., has been organized to make and sell concrete ties under the Sneed and Cowan patents. The capital stock is $100,000, and is fully subscribed. The officers of the company are: J. R. Sneed, president; A. E. Reader, first vice-president; D. W. Heilig, second vice-president; H. B. Eshleman, secretary and treasurer; R. J. D. Cowan, general manager. The Sneed patent covers a one-piece tie of reinforced concrete with wood or paper cushions to take the shock of the rolling stock. The Cowan patent covers a three-piece reinforced concrete tie which uses wood or paper cushions as

above. The company is at present making the one-piece type and test ties are being placed in a number of stretches of track on various railways.

Mr. W. R. Crawford, formerly connected with the Cooper Heater Co., Carlisle, Pa., has been placed in charge of the railway department of the Chicago office of the Allis-Chalmers Co.

The Railway Supply & Curtain Co., Chicago, Ill., has been incorporated to manufacture railway supplies, curtains, shades, and to do a general merchandise business. The incorporators are William T. Nelson, Carl Liesendahl and James J. Barbour. Capital stock, $10,000.

J. A. Fay & Egan Co. announce the discontinuance of their Greenboro, N. C., agency. The Chattanooga, Tenn., office has also been discontinued and a new suite of offices opened in the Candler Bldg., Atlanta, Ga. The new Atlanta office will handle all business in the states of North and South Carolina, Tennessee, Georgia, Florida and Alabama (outside of Mobile). S. Lee Smith, Benj. H. Cox, Jr. and D. E. Gray, will now make Atlanta their headquarters.

Milton Bartley, president of the American Nut & Bolt Fastener Co., of Pittsburg, Pa., has just received patents granted him on January 17, 1911, for a new rail fastener. This fastener will be put on the market in the fall of this year but any railway, we are advised, can have a trial lot without cost by giving the make of rail, size of bolt used and number of pounds of rail to the yard.

Meeting of the Executive Committee, Chief Interchange Car Inspectors' and Car Foremen's Association of America

A meeting of the executive committee of the Chief Interchange Car Inspectors' and Car Foremen's Association was held at Toledo, Ohio, Feb. 18th, 1911. Chairman Waughop called the meeting to order at 10 o'clock a. m. The following members were present:

H. Boutet, Chief Interchange Inspector, Cincinnati, O.
F. W. Trapnell, Chief Interchange Inspector, Kansas City, Mo.
Stephen Skidmore, F. C. D.—C. C. C. & St. L. Ry., Cincinnati, O.
Chas. Waughop, Chief Interchange Inspector, St. Louis, Mo.
A. Berg, Foreman—L. S. & M. S. Ry., Erie, Pa.
J. L. Stark, Gen. Inspector, H. V. Ry., Columbus, O
T. J. O'Donnell, Arbitrator—N. Y. C. Lines. Buffalo, N. Y.
W. R. McMunn, A. C. C., C. D.—N. Y. C. & H. R. Ry., New York City, N. Y.
F. C. Schultz, C. C. I.—C. B. & Q. Ry., Chicago, Ill.
J. L. Stark, Gen. Inspector, H. V. Ry., Columbus, O.
W. D. Cox, T. C. I.—W. & L. E. R. R., Toledo, O.
H. J. Daruer, G. C. F.—T. T. R. R., Toledo, O.
F. Eicher, F. P. C.—C. C. C. & St. L. Ry., Cincinnati, O.
D. C. Follas, C. C. to G. M.—T. T. R. R., Toledo, O.
C. M. Hitch, G. F. C. R.—C. H. & D. R. R., Cincinnati, O.
G. C. Livingston, F. C. R.—H. V. R. R., Toledo, O.
F. M. Lucore, A. to A.—A. R. A., Chicago, Ill.
J. G. Stokes, F. C. I.—N. Y. C. Lines, Toledo, O.
W. Starkey, F. C. R.—A. A. R. R., Toledo, O.
A. S. Sternberg. G. I. C. D.—Wabash R. R., Toledo, O.
W. J. Stoll, C. I. I.—All Lines, Toledo, O.
W. R. Wilson, G. C. F.—N. Y. C. Lines, Toledo, O.
W. Westfall, G. C. F.—L. S. & M. S. R. R., Collinwood, O.
R. E. Weale, Toledo, O.

Chairman Waughop introduced J. J. Mooney, director of public safety of the city of Toledo and H. L. Paine, secretary of the Chamber of Commerce of Toledo, who spoke on the merits of Toledo and guaranteed a very warm welcome if the meeting should be held in Toledo next September.

Mr. Boutet.—I would suggest that we do not go through the rules. I presume everybody came here prepared to know what changes they want, and after the recommendations are adopted, then we can put them in form to compare with the rule, so as to get them in writing, I move that course be pursued.

Mr. Waughop—I would suggest that we confine ourselves to one or two recommendations. My experience with the Arbitration Committee is that the less recommendations we make, the more attention will be given to them. I would particularly call your attention to my motion at Washington last September in regard to the penalty defects on cars offered in interchange. I think that it is one of the best recommendations that this body could make, and I would entertain a motion that we proceed on that subject first.

President Boutet—To start something, I would offer as an amendment to the rules of interchange, the recommendation made by us last year in rules 2, 3 and 4, which I will read.

Seconded.

Mr. Boutet—I wish you would give all a full opportunity to be heard on this. Let them recognize that they are at liberty to give any ideas as to what would be advantageous in the rules. We are supposed to represent their wishes, and we have quite a large meeting here.

Mr. O'Donnell—I think it is proper that Mr. Boutet should read one rule at a time and let us digest it by itself and explain what it takes the place of. If he will read the first rule we will simply pass on it.

Mr. Boutet—That would be almost impossible to do, but it was with the idea of getting "Run, repair or transfer" advocated, in fact our Local Car Foremen's Association on last Thursday suggested making the same recommendation. That seems to be what our General Managers want more than anything else. A good many people say that run, repair and transfer is going to work a hardship on the receiving line. With this ten-hour provision, they are going to get but very little if any advantage. It isn't working any hardship on anybody. If it is a loaded car and they cannot make repairs when the car is loaded, we give them a transfer, but if it is an empty car, you have the empty car to work in in preference to the loaded. It is not the serious defects; it is the little things that the inspectors get a chance to quibble over. They are working the same in Chicago, St. Louis and Kansas City, and at Buffalo pretty near the same. There are four or five large interchange points. I suppose there are as many cars interchanged at these points as there are at any other eight points in the country, or any other ten points; if it is a good thing for large places, why should it not be a good thing for all? Some put up the plea: "I have interchange where I get ten cars a week. They might put a car in there that would cause me to transfer." It isn't any harder on one than it is on the other. Others put up the plea: "I do not receive enough empties, and that is going to work a hardship." But he gets paid for the loads. You bring your own inspector over in your own yard and the foreman knows what is set out. If he has to set anything out it is brought to the foreman's attention directly. He does not have the other foreman come there and complain about setting cars back. You get the revenue if you haul it ten miles. If you haul it 100 miles backwards, nobody gets any pay for that.

Mr. Schultz—We have been operating on the run, repair or transfer plan in Chicago for twenty years, and the matter of returning loaded cars today is entirely out of the question. I haven't a recollection at this time of a loaded car being returned. We do not work on the plan of getting a transfer order. The receiving road stands the cost of transfer and uses their own judgment. I think the plan is more feasible than the one outlined by Rule 15 for the reason that that rule requires inspection by a third party. It is unreasonable to expect a railway to hold loaded cars and cause the receiving line to be criticized for the delay. There is one good thing about it; you would be surprised how few cars require transfer when they have to pay for it themselves. If you hold the foreman down that he must personally examine the cars, he would naturally take the load that is in them in preference to transfering. The delivering line paying for the transfer causes too much criticism—too much opportunity for holding a car. It is my experience that where the receiving road has to pay for the transfer, that we move freight faster.

Mr. Starks—Has any recent change been made with reference to your inspection rules at Chicago, or are they governed by M. C. B. rules?

Answer—There hasn't been any agreement. It is still under consideration. We work strictly according to M. C. B. rules, as near as it can be brought out with the exception of A. R. A. Rule 15. The plan under way, to adopt a set of rules which have in mind the strict operation according to M. C. B. rules, namely, to card cars under M. C. B. rules—the plan has an exception as to A. R. A. Rule 15.

Mr. Schultz—The committee, of which I am a member, found that a great many roads, and one that I work for, are applying a so-called trace card. I watched my inspectors pretty closely and they had plenty of time to put them on. It occurred to me that if they had time to put on a trace card, they had time to put on a defect card.

Mr. Waughop—How do you account for such points as Cincinnati and St. Louis having no tracers?

Mr. Schultz—They haven't wakened up to the fact. I find that coming through Junction points that the cars get into Chicago about two days before the card, or three months after. The only place to put them is on the car.

Mr. Wauhop—I find that the cars that are carded at Chicago get back to St. Louis before the cards are put on.

Mr. Schultz—They are not being carded at Chicago.

Mr. Stoll.—As far as this point is concerned in reference to loaded cars we have had run, repair or transfer for twenty years, as far as the mechanical part is concerned. We have not returned a loaded car for repairs, with the exception of penalty defects. They have been returned at one time but very few at the present time. As to empty cars, we use our own judgment whether the cars will be repaired by the receiving line.

Mr. Sternberg—I understand that Toledo is working the A. R. A. rule. There are quite a number of Toledo men here and I would like to hear an expression.

Mr. Stoll.—We transferred in the last six months of 1910, 630 cars, on an average of 3½ a day.

Mr. Waughop—Do you all understand that A. R. A. Rule 15 gives the privilege of any individual to make its own arrangements as to transfer and otherwise? I so understand it.

Mr. Wilson—If you want to work the M. C. B. rule, you will have to work the A. R. A. rule, because you cannot work the one without the other.

Mr. Boutet.—I believe Mr. Wilson's line receives a good many cars of coal; that seems to be the bone of contention. I would like to ask Mr. Wilson if it is working any hardship on him, or doesn't that condition prevail.

Answer.—The Lake Shore receives a great amount of coal and the A. R. A. rule governs that to a considerable extent. In Toledo they go more on the condition of the equipment in the coal line. We have nothing to do with the transfer of the coal. Part of it can be and part of it cannot. It has to be taken up with the delivering company's agent and they dispose of it; if not, they go ahead and tell our agent to transfer it; then we get a transfer. But we do not go much here on the lading; it is on the physical condition. I cannot see where the A. R. A. rule is working a hardship on any one. Regardless of that, if we can run a car we run it.

Mr. Wilson—There are three conditions under which we transfer: When due to defective equipment, unsafe to run according to M. C. B. rules, unless without transfer repairs can be made in 24 hours.

Mr. Sternberg—I believe the chief objection is on account of fear of delaying freight. We are informed that at Toledo they have been working under it and have no trouble. It appears to me if A. R. A. rule is put into effect they might have a little trouble at the start but later on everybody would get used to it, and it would work out. I believe we transfer more cars in Chicago under the present ruling than they will in Toledo under the A. R. A. rule. It has been that way with us and a rule like St. Louis, with 24 hours, will bring just as much contention as the other way, because there will be a dispute on their hands whether or not it ought to take only 18 hours to repair a car. I remember we had the number of hours specified in Toledo and we had trouble in that respect. I believe there are more points today working under A. R. A. Rule 15 than there are that are not working under it, and the sooner we get in line the better. I am in favor of working under M. C. B. rules. At the present time Toledo is suffering a hardship in carding cars simply because Chicago does not do their part. Cars come down from Chicago that ought to be carded in Chicago, and Toledo has to hold the freight to put on cards. If the M. C. B. rules were lived up to universally and cars carded in interchange, all points would be relieved because they should be carded at the proper place.

Mr. Skidmore—As stated by Mr. Schultz the receiving line to transfer at their own expense cuts out any contention as to the 24 hour clause, or as to the physical condition of the car. I will agree with Mr. Schultz that there will be less cars transferred, if the receiving line had to do it at their own expense. It is human nature to let the other fellow pay for the transfer, if he can possibly do so under the rules. We have worked under all kinds of rules at Cincinnati. We have had run, repair or transfer, and we have had the delivering line pay for the transfer as they are doing now, and I will say that it was much more satisfactory when the receiving line was doing the transferring at their own expense.

Mr. Boutet—The matter of transfer is not altogether in this recommendation. It is run, repair or transfer; that is what I am trying to get at, to see if it is not advantageous to the railroads, if it would not move freight faster than anything else they can do to prevent any cars being sent back.

Mr. Trapnell—The transfer should be done at the receiving line's expense, and we have the thing in a nutshell. If you desire to transfer the car, do it at your own expense.

Mr. Boutet—Is it possible that the defects are only on cars going one way?

Answer—On corn, they only travel east. Coal and such comes west.

Question—Wouldn't it necessarily follow that at the end of the year, when you balance your books you would find them about even on the transfer, either way?

Mr. O'Donnell—Our transfers in Buffalo are, safe to say, four east bound to one west bound. With corn and wheat we repair drafts under load. Barley goes up to the roof and we simply have to transfer.

Mr. Lucore—Yes, of course it would be very nice if we could all agree to A. R. A. 15; but inasmuch as we cannot, we can still pass over that.

Mr. O'Donnell—Read the rule and let's adopt it or reject it.

Mr. Boutet—Rule No. 1 is to remain as it is.

Rule No. 2.

No car must be offered in interchange unless safety appliances are in good serviceable condition and car is safe to go to the receiving line's repair or transfer track.

Mr. O'Donnell moved the adoption of the report, which was seconded and carried.

Mr. O'Donnell—I think we should eliminate from Rule 3—"in accordance with the American Association Rule 15"—because you have entered on a subject that is foreign to this body. The expense of transfer is largely controlled by the operating department. I am in favor of accepting the car.

It was moved that Rule 3 be adopted. Seconded and carried.

Rule 4.

Mr. Schultz.—That is perhaps purely local with the receiving line. It depends upon the facilities; some take proper care and others do not pay any attention. I want to leave that with the receiving road. If they want the cars bad enough, it is purely a local matter.

Mr. Sternberg—That would have a serious effect at small interchange points.

Mr. O'Donnell—I do not like to see Mr. Boutet's motion rejected without some recommendation. We might suggest that the movement of empty cars in interchange is very vital to the interests of the railroad.

The question was put upon the adoption of Rule 4 and lost.

Mr. Boutet—I move that this Executive Committee recommend to the Arbitration Committee that owner's defect in one condition, be made owner's defect under all conditions.

Mr. Boutet—If a side door is gone, you can put it on and charge the owner. Missing material ought to be charged to the owner, as much under one condition as another.

Mr. O'Donnell—I think it is only proper and just that we should refer to the rules in this regard; we should ask them to simply eliminate from these rules the reference to cars offered in interchange of missing materials and owner's defects. This body represents in a way the interchange throughout the country, and we could say that this committee recommends, without reservation, that owner's defects on a car travelling at any point throughout the country should be considered as such at any point.

Mr. Schultz—I do not think we should make any exception.

The question was put upon Mr. Boutet's motion and carried.

Mr. Boutet—I have one other motion; that the master car builders adopt and put in force a standard steam hose coupling for passenger cars.

Seconded.

Mr. Hitch—I am heartily in favor of the M. C. B. Association adopting an M. C. B. standard steam hose coupling which will do away with considerable delay in the movement of passenger equipment and bring about better conditions throughout the country, and it will save considerable time in tracing the hose that we have to apply.

Mr. Boutet—The condition at Cincinnati is something like this: The Penna. interchange sleeping cars with the L. & N. The C. H. & D. interchange with the Cincinnati Southern and the Big Four has two lines to interchange with. I believe the M. C. B. Association should designate what is a standard, and let them all put the same coupling on and save this annoyance.

Mr. Hitch—The proceedings of the M. C. B. Association do show an illustration of a steam hose coupling that is recommended as a standard, but it is not being enforced throughout the country. Of course there are two different styles of steam hose coupling used on the different lines in Cincinnati.

Mr. Schultz—The present practice of running cars through on various lines is being extended. It has become a nuisance to be obliged to change equipment. We may be out of order but we certainly are right in calling attention to this.

Mr. Elcher—There is no question about the steam hose business being the biggest nuisance in existence. There are three or four different kinds of steam hose and nobody knows any better than I the troubles.

The question was put upon the motion and carried.

Moved and seconded that it be recommended that the M. C. B. Association adopt a standard steam hose coupling. Carried.

Mr. Sternberg—I have a little matter here: Quite a number of members recommended to the committee on standards and recommended practice in 1910, the addition of the 8½-in. coupled butt, for the reason that the 6¼-in. coupler butt was designed to use with the 6¼-in. x 8-in. drat spring, allowing ¼-in. clearance. Also the 9⅛-in. butt was designed to accommodate certain friction draft gears requiring that width within the yoke. This recommendation was submitted to letter ballot and rejected, the vote being 1,191 yeas and 614 nays, total 1,805; necessary votes for adoption, 1,203. Inasmuch as there are thousands of cars equipped with M. C. B. "Class G." springs, the 6½-in. butt is not of sufficient depth, and not being good practice to use liners between the butt and yoke ends (the diameter of the class G spring being 8-in.) and furthermore this spring cannot be used with a 9⅛-in. butt as the clearance was too great, also the spring would not be entral. We believe this matter should again be submitted to the M. C. B. committee with a view of urging the adoption of the 8½-in. butt as a standard. I do not think it

is practical to use liners; it certainly weakens the point in your construction, and I have in mind to make this recommendation to the M. C. B. Association, and I thought possibly that we might get this executive body to do the same.

President Boutet—I feel that if this association can at present make recommendations for interchange, that we had better keep away from the standards for a while. They have mechanical experts and I am afraid if we should attempt to offer a recommendation of this kind they would say we were trying to run the railways.

Mr. Stark—If there is no particular objection on the part of Mr. Boutet, or any members of the committee, I would like to see Mr. Sternberg's suggestion go through—the adoption of an 8½-in. butt as a standard. We have made this recommendation from our own office to the committee, and I would like the additional weight that the recommendation of this committee would give the movement. It was voted upon by letter ballot and came within about nine of having the necessary majority, and we feel that it will be a vital point when another vote is taken. I would like the additional influence.

Mr. Schultz—We have a great many cars equipped with these couplers. They are serviceable and there is no reason why they should not be worn out. If I felt that rule, if adopted, would create any more of them I would oppose it.

Question—How are you going to get away from the use of the "Class G" spring?

The motion to adopt Mr. Sternberg's suggestion was seconded and carried.

Mr. Sternberg—That went through nicely; I will try another one. It is something in regard to billing. We have experienced considerable controversy, especially with private line companies operating refrigerator cars, in the settlement of freight car repair bills, covering the proper labor charge for removing, repairing and replacing body truss rods. I would, therefore, respectfully request that your committee recommend to the M. C. B. Arbitration Committee to fix a proper labor charge covering half as well as a full continuous body truss rod, and have same inserted in M. C. B. Rule No. 111.

Mr. McMunn—I move that Rule 12 read as follows: The evidence of a joint inspector, or the joint evidence of two persons, who have made personal inspection of car, one representing the owner of the car and the other representing the delivering road, which has a representative member in the M. C. B. Association, that the repairs are not proper, shall be final, etc.

Mr. Schultz—I believe that the signing of joint evidence by a party without inspection should be prohibited. There are so many joint evidence cards passed back and forth and signed indiscriminately that I am disgusted. After they get out joint evidence, they get out a round robin and each road has to write forty letters, and the whole thing may be two wrong bolts. There ought to be a reasonable excuse for making them out in the first place. Our company has instructed their mechanical men not to make joint evidence cards for wrong repairs unless they must be repaired at once.

Mr. Trapnell—That brings out a good point. There are some private lines that get several defect cards for one defect. We have another line that signs every joint evidence card that comes into the superintendent's office; he authorizes them to issue a defect card without any further investigation. That can be handled in a dozen different ways and get a dozen different cards for the same defect. I believe it would be a good plan.

Mr. Boutet.—To sign joint evidence without seeing the car is a farce. This Association made a recommendation that no joint evidence be signed unless the car was viewed by the two parties.

Mr. Schultz—If the use of the car is worth anything, it is worth more than to shop it. It takes three or four days and the repairs would have to be very extensive before they are worth the time that you put the car out of service. I would like to make an amendment to Mr. McMunn's motion: "That joint evidence card shall not be signed without the car being properly jointly inspected by two persons, and the parties signing the joint evidence.

Mr. McMunn—I would say the car being jointly inspected. Not "properly."

Mr. O'Donnell—You are tying up interchange. Suppose the roads get three or four cars this morning with improper repairs. The Lehigh Valley would call me over to look over the cars. I would have to have three or four assistants. I think Mr. McMunn's motion that the party signing the joint evidence must be a representative of the M. C. B. fully meets what he wants.

Mr. Schultz—The other remark is what I concur in. He does not propose to sign joint evidence without knowing.

Mr. O'Donnell—I'd just as soon take the statement of the receiving road; it is just as good as the signing of joint evidence by two men who never saw the car.

Mr. Boutet—Nobody will get joint evidence in my office unless we personally see the car.

Mr. O'Donnell—Why don't you insist on seeing all owner's defects.

Mr. W.—We do not care for them.

Mr. O'Donnell—The rule says that you can charge a car owner a couple of dollars a month of repairs made on any road in the country.

Mr. Schultz—I would be willing to recommend that joint evidence be abolished altogether; let the owner fight it out with the man that made the repairs.

Mr. O'Donnell—All good men are not going to live forever, and the railroads are going to run on. The men are just as good in their intentions and we ought to be honorable and fair with the men who handle these repairs. If a foreman says to me "That is correct," it is just as good as if I saw it. It is impossible to see all these cars interchanged and our association doesn't attempt it.

Voice.—The amendment to the motion is that joint evidence be not signed without the inspection of the car by the person signing the joint evidence.

The ballot resulted in 4 yeas and 1 no.

Mr. Schultz—My motion should be corrected so as to embody Mr. McMunn's intention, that the party so signing joint evidence must be a representative of the Master Car Builders' Association.

Mr. Trapnell—The original motion called for the party signing the joint evidence must be a member of the M. C. B. Mr. Schultz offers an amendment because he wants the personal inspection of the two parties, which comes in under another motion.

The question was put upon the original motion and carried.

Mr. Schultz—I think it is well to recommend to the M. C. B. Association that inasmuch as repairs are made by a great many new and inexperienced men, particularly in the yards where they cannot be properly supervised, that the name of the knuckle be stamped plainly on the knuckle during the progress of manufacture.

A motion to that effect was carried.

Mr. O'Donnell—Don't you think we ought to ask the arbitrating committee to again consider the end of the car; that damage to the end of a car, or any portion of the same broken out will be considered owner's defects.

Motion made and carried.

President Boutet read a communication from Mr. Wall and suggested that Montreal and Minneapolis had been mentioned at the Washington meeting. Mr. O'Donnell read a communication from Montreal.

Mr. Trapnell—Mr. Campbell was down to see me and he said he had nothing further to offer with respect to Minneapolis than what was offered at Washington. He would like to see the meeting go there on account of getting a majority of the men up there into our association.

Mr. Schultz—I am sure that if we could consistently go to Minneapolis that we would not only have a good time but we would greatly increase our membership. I feel that possibly from the far East, it would be an inconvenient point, but there is no question in my mind but what arrangements would go through without a hitch.

It was moved by President Boutet that the next meeting be held in Toledo. Seconded and carried unanimously.

Mr. Stark—In view of the fact that we have decided to come to Toledo, I would suggest that the date be set as early in September as possible, and would move you that the convention be called for the 5th, 6th and 7th.

Seconded and carried.

President Boutet moved that the Boody House be made headquarters.

Mr. Stoll—I am in favor of the Boody House with the understanding that the President make necessary arrangements.

The question was put upon the motion and carried.

It was moved that a vote of thanks be extended to the men who had attended and made the meeting interesting.

Seconded and carried.

Thereupon the meeting adjourned.

Recommendations.

The Chief Interchange Car Inspectors' and Car Foremen's Association of America begs to submit the following recommended changes in M. C. B. rules:

Eliminate Rule 2 and substitute the following:

No car must be offered in interchange unless the safety appliances are in good, serviceable condition and the car is safe to go to repair or transfer track of the receiving line.

Loaded cars must be accepted in interchange, if safe to go to the repair or transfer track of the receiving line, the receiving line to run, repair or transfer.

If repairs are made and chargeable to the owners they will so charge, if the defects are such that the delivering line is responsible, a defect card shall be given against the delivering line for same.

Eliminate Rule 12 and substitute the following:

The evidence of a joint inspector or the joint evidence of two persons, who have made a personal inspection of car, one representing the owner of the car and the other representing the delivering road, which has a representative member in the M. C. B. Association, that the repairs are not proper, shall be final.

A joint evidence card shall be used for this purpose, which shall describe and show location of parts repaired or renewed, as per Rule 14. This card shall be of the form shown on page 78.

Insert in Rule 111 a proper labor charge for applying one half as well as a full continuous body truss rod.

That the M. C. B. Association change the rules making car owner's defects under one condition, car owner's defects under all conditions.

In other words, if the delivering line can charge owners for repairs on cars before delivery, the receiving can repair and charge owners after delivery.

That the M. C. B. Association adopt and put in force a standard steam hose coupling on passenger cars.

That the M. C. B. Association adopt an 8½-inch butt end as one of the standard couplers.

That the M. C. B. Association require the name to be cast or stamped on the knuckle the same as on coupler.

Recent Railway Mechanical Patents

Material for this department is compiled expressly for RAILWAY MASTER MECHANIC by Watson & Boyden, Patent and Trademark Attorneys and Solicitors, 918 F Street, N. W., Washington, D. C., and to them all inquiries in regard to patents, trademarks, copyrights, etc., and litigation affecting the same should be addressed.

A complete printed copy of the specification and drawing of any United States patent in print will be sent, postpaid, on application to the above firm, to any address for ten cents.

BRAKE BEAM.

984,643—Carl E. Bauer and William Edward Fowler, Hammond, Ind., assignors to Simplex Railway Appliance Company. Patented Feb. 21, 1911.

This brake beam consists of a cat metal compression member and a strut having openings through which is slipped a bent rod

985,657.

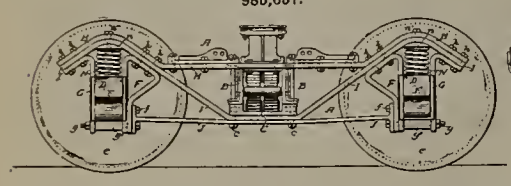

984,643.

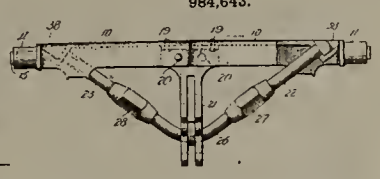

26. Bolts 22 and 23 pass through the compression member and are secured to the rod 26 by means of turnbuckles 27 and 28. This provides an exceedingly strong and rigid structure.

RAILWAY-CAR SEAT.

985,364—Henry B. Morris and Clarence A. Van Derveer, Michigan City, Ind., assignors to Ford & Johnson Company, Michigan City, Ind. Patented Feb. 28, 1911.

This invention relates to that class of car seats in which the

985,364.

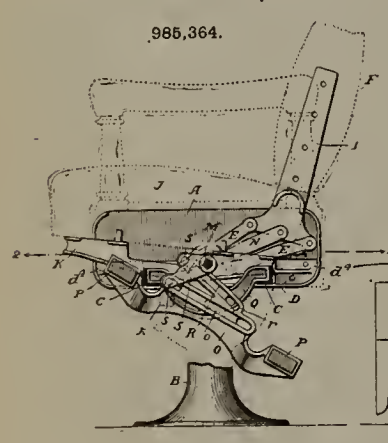

985,400.

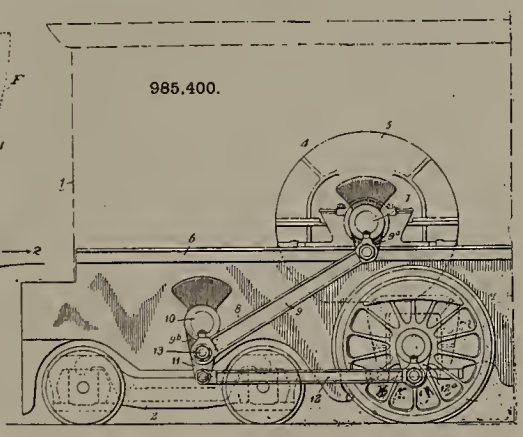

back may be shifted from one side to the other without being turned over. The improvements consist in details of construction relating to the seat frame and the mechanism for supporting and operating the foot rest. Two foot rails are provided and are connected to pivoted yokes which are shifted at each operation of the back.

ELECTRIC LOCOMOTIVE.

985,400—William Cooper, Pittsburg, Pa., assignor to Westinghouse Electric and Manufacturing Co. Patented Feb. 28, 1911.

This type of locomotive is designed for heavy service and carries a very large motor, the object being to support the motor on the

986,689.

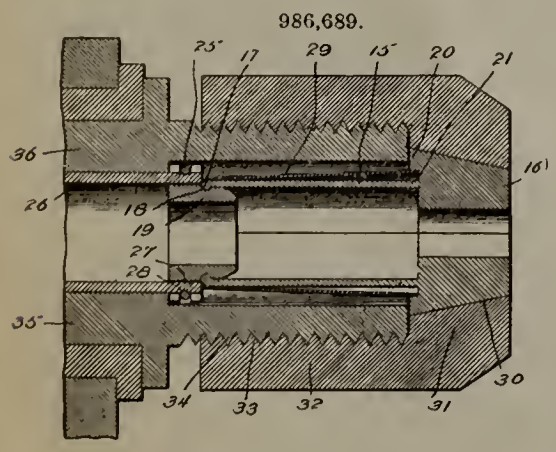

987,014.

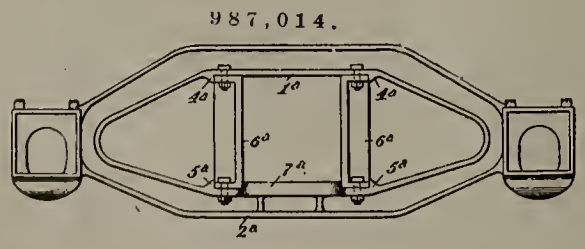

986,732.

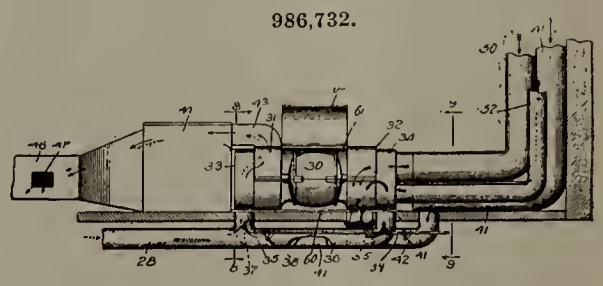

body frame rather than upon the axle so as to reduce the wear. The motor is connected to the driving wheels through connecting rods 9 and 12 and a jack shaft 10 as will be clear from the illustration.

CAR-TRUCK.

985,657—Harry A. F. Campbell, of Cynwyd, Pa., assignor to Baldwin Locomotive Works, Philadelphia, Pa. Patented Feb. 28, 1911.

The improved truck frame covered by this patent is exceptionally light for its strength. It relates to that type of truck known as the arch-bar truck in which a diagonal member I extends from beneath the spring plank over the tops of the pedestals. The construction will be evident from the illustration without further explanation.

CAR-HEATING AND VENTILATING SYSTEM.

986,732—Min De Lin McGerry, Chicago, Ill., assignor to Frank P. Mies, Chicago, Ill.

The heating system comprises two fans, one a fresh air fan, the other a foul air fan. Each fans has two air supply paths, one path including the source of heat, the other excluding the source of heat.

CAR-TRUCK SIDE FRAME.

987,014—Oswald S. Pulliam, Pittsburg, Pa., assignor to Pittsburg Equipment Co., Pittsburg, Pa.

A car truck side frame in which the top and bottom members

986,656.

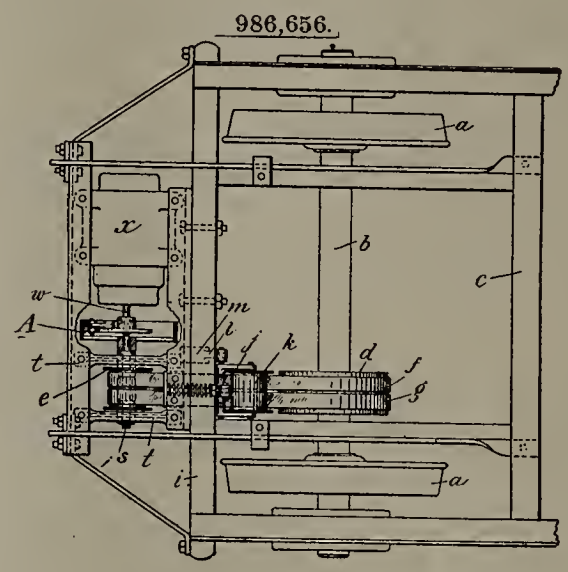

and the journal boxes are found in one casting. The columns between the top and bottom members are separable and are fastened to these members by lugs.

MEANS FOR DRIVING GENERATORS FROM CAR AXLES.

986,656—William I. Thomson, Newark, N. J., assignor to Safety Car Heating & Lighting Co.

A car truck having longitudinal members extending beyond the truck frame, and a cross bar joining the ends of the longitudinal members. A generator is suspended from the cross bar, and is driven by a belt drive from the axle of the truck.

CHUCK.

986,689—Edwin A. Clark, Topeka, Kans.

An axially thrust chuck having a series of segment-shaped sections, one end of which forms a gripping jaw, the other end being pivoted and means provided for pushing the jaws apart when the pressure is relieved.

RAILWAY MASTER MECHANIC

Established 1878

Published by THE RAILWAY LIST COMPANY

WILLIAM E. MAGRAW, Pres. and Treas.
CHAS. S. MYERS, Vice-Pres.
C. C. ZIMMERMAN, Bus. Mgr.
J. M. CROWE, Mgr. Cent. Dist.

LYNDON F. WILSON, Managing Editor
OWEN W. MIDDLETON, Assoc. Editor
KENNETH L. VAN AUKEN, Assoc. Editor
WARREN EDWARDS, 2d V.-P. & Assoc. Editor

Office of Publication: Manhattan Building, Chicago
Telephone, Harrison 4948
Eastern Office: 50 Church Street, New York
Telephone Cortlandt 5765
Central Office: House Bldg., Pittsburg, Pa.

A Monthly Railway Journal

Devoted to the interests of railway power, car equipment, shops, machinery and supplies.
Communications on any topic suitable to our columns are solicited.
Subscription price, $2.00 a year; to foreign countries, $2.50, free of postage. Single copies, 20 cents. Advertising rates given on application to the office, by mail or in person.
In remitting, make all checks payable to the Railway List Company.
Papers should reach subscribers by the 16th of the month at the latest. Kindly notify us at once of any delay or failure to receive any issue and another copy will be very gladly sent.

Entered as Second-Class Matter June 18, 1895, at the Post Office at Chicago, Illinois, Under Act of March 3, 1879.

Vol. XXXV. Chicago, May, 1911 No. 5

CONTENTS.

Editorial—
A Month from Now....161
The Situation in Brief....161
A Substitute for Electrification....162
The Growth of Motive Power....162
Flange Wear on Electric Locomotives....163
Electrification in Italy....163
Spring Meeting of the A. S. M. E....166
Motor Installation in Chicago Railways Company's Shop....166
Strength of Oxy-acetylene Welds in Steel....170
Superheater Maintenance....172
A Comparison of Locomotive Valve Gears....173
M. C. B. Interchange Inspection....176
Locomotive Developments in England and Germany....177
Care of Small Tools....178
Punctuality Record, N. Y. N. H. & H. R. R....179
Shop Kinks—
Welding Locomotive Frame with Limited Facilities....180
Dies for Brake Rod Jaws....180
Removing Air Pumps....180
Lifting Machine for Large Railway Cars....182
The Oxy-acetylene Process and the Steel Car....184
Locomotive Blows and Pounds....185
Coal Storage Pits, Illinois Traction System....187
The Coal Problem....188
A Sneak Advertiser....190
New Books....191
Personals....191
Among the Manufacturers—
Libby Turret Lathe....192
Commutator Slotting Tools....193
Universal Flexible Packing....193
Double Spindle Shaper for Car Shops....194
Sanitary Wiping Rags....194
Hydraulic Rams for Elevating Water....195
New Literature....195
Industrial Notes....196
Recent Railway Mechanical Patents....198

A MONTH FROM NOW.

In about a month, if fortune favors you, you will be going down to the conventions at Atlantic City, and of course this year's meetings are to be the best and most helpful the association has yet held. It would be contrary to our spirit of progress if they were not to be. One way to make them of more value is to take a little time to familiarize yourself with the program and reports to be presented and to outline a few remarks on the subject in which you are especially interested. In following your technical journals you may have noticed that down on the C. & L. W. they have had considerable success with a new spark arrester, or that out on the P. D. Q. they are making remarkable welds by a certain process. Wouldn't it be a good idea to make a note to see your mechanical friends on these roads while at Atlantic City and hear about it at first hand? It might result in an increase of efficiency and a decrease of expense on your own road. And we believe that with the stir we have had about that overworked word "efficiency" the past year, the men who have ideas on how to decrease the cost of production will be listened to very attentively. The work of the mechanical conventions has probably done as much towards improved methods as any one agency, and this year there is an especial chance for them to shine.

THE SITUATION IN BRIEF.

The Bureau of Railway Economics has recently issued its statement of the "Situation in Brief" for the month of February. It reads as follows:

"February returns, when reduced to a per-mile basis, show a decrease with respect to those for the corresponding month of the previous year. Net operating revenue, that is, total revenue less operating expenses, for all roads reporting, show a decrease per mile from the figure of February, 1910, of $34 or 14 per cent. This decrease was due to a decline in revenues rather than an increase in expenses."

Nobody can question the facts as outlined in the above paragraph, as they are gained from the same sources from which the Interstate Commerce Commission derives the information for its records. The paragraph could be stereotyped and used each month except for the slight change in the figures given. In the words of President McCrea of the Pennsylvania:

"It seems proper to note in this connection the increasing number of items of expenses which are entirely beyond the control of the management, and the general tendency in this direction which is being brought about by regulation through legislation, and which, though difficult to detect in the ordinary year to year comparisons of results of operations, must, nevertheless, be the subject of grave concern.

"The various state and federal laws enacted during the past ten years have added heavy burdens to the annual cost of operation, and while many of them are intended to provide for safer operation, and are supposed, therefore, to be in the interest of safety, it is becoming increasingly difficult to meet this burden and also adhere to the high standard of maintenance and operation which has been provided for the public.

"The recently enacted federal legislation which requires the changing of ladders and brakestaffs on freight cars will cost the Freight Car Pool lines of the Pennsylvania system nearly five million dollars during the next five years, with practically no benefit whatever to the lines thus affected.

"The state and municipal legislation covering the elimination of grade crossings has already resulted in expenditures of over $3,000,000 on the lines of the Pittsburgh, Cincinnati, Chicago & St. Louis Ry., and with the present tendency to place a larger share of this expense on the railroads, the annual expenditures for this item are likely to be still further increased in the future."

The railways must solve this situation; they must also have large quantities of new equipment, the purchase of which has been postponed until operation in some cases will soon become actually dangerous. One avenue which, though fraught with thrill, offers temporary solution is wage reduction. It is stated that several railways are about to take advantage of this method. One railway has already instituted a plan for a very considerable reduction of labor forces, which amounts to the same thing as far as temporary saving is concerned, but which will prove enormously expensive in the end. In any event it is probable that wage reduction must follow and it would seem that it would be better for all concerned, from the labor organizations to the directors, that this method rather than that a reduction of forces should be adopted.

It must be remembered that short time in the shops and less-than-capacity operation of repair equipment will result in a situation later which usually calls for repair work much farther beyond maximum capacity than at first consideration seems logical. Standard maintenance should be religiously defended by mechanical officials, even if compelled on this account to cut the average wage.

A SUBSTITUTE FOR ELECTRIFICATION.

During a recent meeting of the Western Society of Engineers in Chicago at which a paper dealing with the smoke nuisance and electrification of the Chicago terminals was read by Paul P. Bird, a suggestion of a substitute for actual and complete electrification was submitted in discussion by Robert H. Kuss. The plan offered by Mr. Kuss incorporates the following essential parts for each train power unit:

1. An internal combustion engine of the Diesel type, capable of developing approximately the average horsepower of the service for which the locomotive is designed.
2. A direct-connected electric generator, the output of which is designed to agree with the engine output running at its most economical rating.
3. An electric storage outfit, capable of serving power for a suitable period of time, sufficient to exert a maximum effort equal to the power requirements of the locomotive when the engine and generator are out of service.
4. Motor-driven running gear.
5. Controlling apparatus capable of throwing into service the generator alone, the storage alone, or both together at any desired ratio of power delivery.

Mr. Kuss states that all the essential parts of this suggested system have already been developed, but that a suitable combination is lacking. The "deep study" of the subject evidenced in this discussion is typical of the engineers in outside lines who have attempted to advise those directly concerned in the technical problems of railway work. A great many motive power men, several of them to their sorrow, can testify to the fact that a "suitable combination," such as is detailed above, has been proved practically impossible. These same features just as outlined by Mr. Kuss have been incorporated in several projects which have been tested time and again and found unsuited to the purpose. It would perhaps be unfair to the men who have been back of these projects to mention names in this connection, but the information is readily accessible to those advisors who care to check their own discussions.

THE GROWTH OF MOTIVE POWER.

The largest locomotive in the world does not hold its distinction over a month or two these days before it is displaced by the "largest" locomotive. This has been especially true during the past few years. Our attention has been particularly called to this by the latest "largest" locomotive on the Santa Fe; at least it is the largest at the date of going to press. Incidentally it might be noted here too that the Santa Fe has been one of the leaders in using big engines. The latest output of the Topeka shops is of the Mallet type, with a 2-10-10-2 wheel arrangement, a total length of 121 feet, and a total weight of 500,000 pounds. Twelve years ago the largest locomotive was in use on the Union R. R. It was a consolidation engine having a total length of 65 feet and a total weight of 334,000 pounds. It had a tractive power of 53,292 pounds, as compared with 110,000 pounds of the latest Mallet. The size and tractive effort of locomotives has practically doubled in the past twelve years, and it is interesting to speculate on what will happen during the next twelve years.

It seems that the limit in length has nearly been reached. The new Mallet on the Santa Fe, for instance, has to be run backwards in order to afford the engineer a clear view of the track. The recent building of two Mallets with flexible boilers, of course, provides means of overcoming some of the mechanical difficulties which encumber the long boiler, and in fact a patent was recently granted to S. M. Vauclain for a locomotive articulated in three sections, with eight drivers for each section, or total of twenty-four in all. The principal feature of this patent consists of making the engine triple expansion, and this affords an opportunity for still greater tractive power. With the use of the superheater, reheater, feed water heater and double and triple expansion, the moving power plant has all the developments of the stationary power plant with the exceptions of the condenser and automatic stoker. The next few years will probably see some marked developments in the field of the automatic stoker. The trend of the stationary plant has been towards the steam turbine and the turbo-electric generating set. Will the portable power plant ever follow in this direction? Probably not; yet it is not a great while since the superheater and feed water heater were considered impracticable. Or

will the growth of motive power lead to that concentrated form of powerful traction—the electric locomotive? Ultimately it probably will; when, no one can predict.

Roads such as the Santa Fe which have certain districts over which the big articulated engines can be used to great advantage are not numerous, and the adoption of big engines for heavy trains is apt to cause some difficulties for the mechanical department on most roads, such as lack of round-house facilities and insufficient length of turntables. New round-houses and turntables now being constructed are made large enough to provide for any motive power which may be used, and we believe they are going to be able to take care of the future, at least in the matter of size. As far as the fast passenger locomotive is concerned it does not seem that there will be any considerable development in its size, the tendency being not towards heavier trains but more of them.

FLANGE WEAR ON ELECTRIC LOCOMOTIVES.

The electric locomotives of the Grand Trunk at St. Clair Tunnel are showing excessive wear on the driving wheel flanges, although they have been in operation less than a year. This is due primarily to the design of the locomotives. Each locomotive consists of two units, and each unit has three pair of driving wheels having a rigid wheel base of 16 feet. No guiding wheels are used and practically all of the flange wear takes place on the leading wheels of each unit, there being very little wear on the wheels at the center. In descending the long grades at the tunnel approaches it is necessary to use the brakes almost constantly and for this reason flange lubricators have not given very satisfactory results. W. D. Hall, the superintendent, has perfected an arrangement for spraying oil on the flanges, which has been giving good results, but has not been in use long enough at present to determine the saving effected.

Electrification in Italy.

Recently received information as to the tests of the three-phase locomotives built for the Giovi line of the Italian State Ry. by the Societe Italiana Westinghouse make it timely to present herewith the results of these tests and a brief description of the locomotives.

The Giovi Tunnel is situated between the stations of Pontedecimo and Busalla on the line between Genoa and Milan. The traffic is very heavy, this being the most important line between Genoa, the greatest shipping center, and Milan, the gratest manufacturing center of Italy. In addition to general freight and passenger traffic hundreds of cars of coal are daily sent over the Giovi line from Genoa to Milan. Electrification became necessary on account of the impossibility of coping with the increase in traffic with steam locomotives. The artificial ventilation of the tunnel, owing to its great length, could not be improved any more and the condition of the atmosphere in the tunnel was such that an increase in the number of trains or steam locomotives would endanger the safety of the service.

The Italian State Ry., after ten years of experience, has chosen for the electrification of railway lines the three-phase system at high-potential, 15 cycles, as adopted in the Valtellina lines and Simplon Tunnel. The first order from the Italian State Railway to the Italian Westinghouse Company

Electric Locomotive and Train, Italian State Rys.

was for 40 locomotives for freight service, 25 of which were for the Giovi line and 15 for the Savona San Giuseppe line from Savona to Turin, which is being electrified at present. The first locomotives were completed in July, 1908, at the Westinghouse Vado Ligure Works. Upon completion they were employed for a time in the Valtellina lines, pending completion of the Giovi tunnel electrification.

The new Giovi locomotive is built for freight service and has a normal operating speed of 28 miles per hour. It can also be used for passenger service, as its speed capacity is as high as it is considered safe to use on the Giovi line. The locomotive has also a 14 miles per hour speed, which is intended for switching purposes and for regenerating power when the train is running down hill. In considering the capacity of the locomotive, however, only the higher speed should be considered, since this is its normal operating speed.

The locomotive on the inside looks very simple. The apparatus that requires only little care is located in the lower cab extensions of the locomotive on either end of the cab. The apparatus that requires more frequent inspection is located in the center of the cab. This arrangement has the advantage that the cab can be provided with windows all around.

Especially noteworthy are some extremely severe requirements in the government specifications, all of which have been amply fulfilled during the witness tests. The locomotive weight is not more than 60 tons, but the mechanical construction is such that the weight can be increased 75 tons by means of ballast.

During the test a train of 418 tons, exclusive of locomotives, was taken with a speed of 28 miles per hour from Pontedecimo to Busalla, a distance of 6½ miles with a maximum grade of 3.50 per cent, an average grade of 2.70 per cent, and a minimum curve radius of 1,200 ft. After this the train was taken back at a speed of 14 miles per hour, the locomotive being connected for regenerating power. The time allowed for one round trip is 140 minutes. After 20 hours of such continuous operation, one round trip without forced ventilation of the motors was made with a temperature rise of the motors considerably less than 75 degrees centigrade. The one hour motor rating for the same temperature is 720 horsepower per motor corresponding to a locomotive pull at the wheel circumference of 19,500 pounds; during the test this rate was exceeded. The friction rating under most unfavorable conditions is such that a train of 380 tons exclusive of the locomotive, can be accelerated to 28 miles per hour in less than 200 seconds, by two locomotives, one pushing and one pulling on a grade of 3.50 and on a curve of not more than 1,200 ft. radius. One locomotive can accelerate a train of 400 tons without locomotive to a speed of 14 miles per hour of a grade of .3 per cent and 300 tons on a curve of 540-ft. radius thirty times in one hour. The maximum starting torque is such that they can revolve the wheels of the locomotive, with its weight increased to 75 tons, while the locomotive is kept stationary.

Overhead Construction in Yards, Italian State Rys.

The motors are three-phase, 3,000-volt, 15-cycle machines arranged to run in cascade and parallel, giving two synchronous speeds of 112½ and 225 r. p. m., intermittent speeds are obtained by inserting rheostats in the circuit. The motors have double bearings, the outer of which is built into the main locomotive frame and carries the reactions of the frame; it also takes the thrust of the connecting rods and is provided with springs to take up all the motion or change of position due to shocks, ballast on locomotive frame, etc.

The inner bearing carries the rotor and has for its function only the maintenance of air gap, so that the rotor itself is entirely independent of any motion of the locomotive frame. The mounting of the motors on the locomotive is accomplished from below by means of an hydraulic lift. The complete changing of a motor, including the connections to the side rods, may be easily done in two hours.

The control system contains a number of excellent features. Since the starting resistances are of water rheostat type it was necessary to design the secondaries of the motors for low potential; this was also desirable in order

to have low potential on the slip rings. The low potential secondaries require, however, the possibility of connecting one of the motors in cascade connection.

The switch performing this reconnecting of one of the stators from high to low voltage is the only switching mechanism in the system which has numerous contacts for heavier currents. It can, in this respect, be compared with either the auto transformer tap switch of single-phase systems and polyphase systems with squirrel cage rotors or with the resistance distributing switches of systems using metallic starting resistance; but its practical operting characteristics are much superior. Since it is always operated without current, the necessary care and cost of maintenance is reduced to less than 10 per cent of that of the other switches mentioned and it may be operated by only two relays, while the others, under master switch control, require relays for all taps.

The wiring required in connection with the potential changing switch is reduced to a minimum by mounting the switch directly on the motor and handling it as a unit therewith. The switch extends into the cab of the locomotive from below and may be readily inspected by removing the protecting cover.

The use of the water rheostat is one of the main advantages of the control system. It eliminates all metallic resistance parts, which are always more or less subject to burnouts and mechanical breakage. Moreover, all contacts that have to be operated under current in the secondary are eliminated, excepting the one contact which short circuits the rheostat. On this contact, however, there is no arcing and burning, since it operates only when the water rheostat is about zero. A further advantage of this control lies in the fact that it does not increase the current by steps, but allows for the finest possible regulation.

The water receptacle is a tight tank, so mounted as to extend below the cab for air cooling. Receptacles for the electrodes extend from below the water level, through the cover and up into the lower parts of the locomotive, the electrodes being supported in the upper portions of these receptacles or cylinders. In operation the height of water in the cylinders is regulated by air pressure in the upper part of the tank which forces the water up into the cylinder and the regulating mechanism extends into the cab proper and can, therefore, be conveniently inspected after the removing of a protecting cover.

The only switch that is interrupted under current is the primary switch; but even for this, switching conditions are very favorable, as the current to be interrupted in the primary of induction motors with wound secondary may be reduced practically to the magnetizing current by first inserting resistance into the secondary and then breaking the primary current. For this reason it has been possible to use other switches, which after an operation of two years are still in good working condition. The excellent feature of the primary of the Giovi locomotive is that it serves as both an interruption switch and a reversing switch without requiring any additional contacts for the reversing: this is accomplished by simply rotating the movable contact parts through a certain angle in order to reverse the motor.

The master switch is arranged for two levers. One of the levers has four definite positions corresponding to the two speeds, to move forward and backward. The second lever regulates the current consumed by the motors. Every position of this lever determines positively the certain maximum current to be taken by the motors; any time the motor tends to take the current larger than corresponding to the lever position, resistance is automatically inserted into the secondary; the lever acts on the armature of a small induction regulator and thereby regulates the secondary potential of the regulator: the induction regulator secondary is connected to one coil of a relay which is counteracted, by the second coil, the current of which is proportioned to the motor current; whenever the effects of the relay coils are balanced the armature is in the middle and the motor currents remain unchanged: as soon as the motor current increases the armature is attracted by the one coil and closes the relay circuit, which increases the resistance in the secondary. The fact that each locomotive can be set for a maximum current would make it possible to use the locomotive in multiple without a special multiple control; nevertheless, a multiple control arrangement is provided for. The special controller allowing for all desired conditions is provided in

Comparison of Steam and Electric Locomotives in Use on the Italian State Rys.

connection with this system. The multiple control system not only permits the operation of locomotives of different wheel diameters in multiple and equally loaded but also permits the loading of them differently with any desired ration of load distribution. This is quite advantageous as it is frequently desirable to keep the drawbar pull of a pulling engine within certain limits and let the pushing engine take care of the greater part of the load.

The coils operating the valves are of a very simple design and work exceptionally well, even if the potential drops to one-half of its normal voltage.

The pantagraph arrangements are very simple. The single bow with two bronze cylinders insulated from each other and revolving in ball bearings engages both overhead wires. The use of the rolling contacts is very favorable for the contact wire, and has given very good results on the Valtellina lines where it has been in use for over 10 years. On this line the rolling contacts were changed after an average of 25,000 loco-Km. with a current often greater than 200 amperes per contact (25,000 Km. Loco. without counting shuntings). On the Simplon tunnel where sliding contacts are used they were changed after 2,700 loco. Km. average. This great difference is due to the fact that the contact point on the rolling type is changing very rapidly so that the melting of the metal which reduces the life of the contact on the sliding type is not possible.

An important feature of the three-phase installations is found in the utilization of regenerated power, which reduces the cost of operating the line and also reduces, by proper arrangement of the schedules, the peak of the load in the generating station and does not require the use of mechanical brakes when the train is going down grade. All apparatus is of Westinghouse manufacture.

SPRING MEETING OF THE A. S. M. E.

The spring meeting of the American Society of Mechanical Engineers will be held at Pittsburg, Pa., May 30 to June 2, 1911. The headquarters of the society during the meeting will be at the Hotel Schenley, but the professional sessions will be held at the Carnegie Institute, which is close to the hotel. The first session for the presentation of papers will be on the morning of May 31. The subject will be "The Mechanical Engineering of Cement Manufacture." After the presentation of the paper those in attendance will have an opportunity to visit the plant of the Universal Portland Cement Company. The special train to this plant will stop at East Pittsburg to permit members to visit the Westinghouse works. On the evening of May 31 there will be a session on machine shop practice at which the subject of assembling small machine parts and the development of milling cutters will be discussed.

On the morning of June 1 there will be a short session with miscellaneous papers, after which an excursion on the river is planned. On the evening of June 1 there will be a reception and dance. On the morning of June 2 papers will be presented which relate to steel works machinery with special reference to blowing engines and forging presses. The convention will close on the afternoon of June 2 with excursions. A session is also planned for the gas power section. The manufacturers of Pittsburg have extended invitations to their works, and E. M. Herr, chairman, and E. K. Hiles, secretary of the local committee, have under way an extensive program for entertainment. Previous to this meeting the American Foundrymen's Association is to convene in Pittsburg and an exhibit of foundry appliances, under the auspices of the association, will be held. The International Art Exhibit at the Carnegie Institute at Pittsburg will be open at the time of the meeting of the American Society.

MOTOR INSTALLATION IN CHICAGO RAILWAYS COMPANY'S SHOPS.

Through the initiative of Mr. John M. Roach, president and general manager, and Mr. John Z. Murphy, chief engineer, the Chicago Railways Co., Chicago, Ill., recently converted to individual motor drive the entire equipment of its large machine and woodworking shops on West End Avenue.

In the engineering details pertaining to the application of motors to the different machines the engineers of the railway company were assisted by engineers of the Reliance Electric & Engineering Co., Cleveland, Ohio, which furnished the motor equipment. After preliminary sketches had been submitted detail drawings were made of all applications and approved by Mr. Murphy.

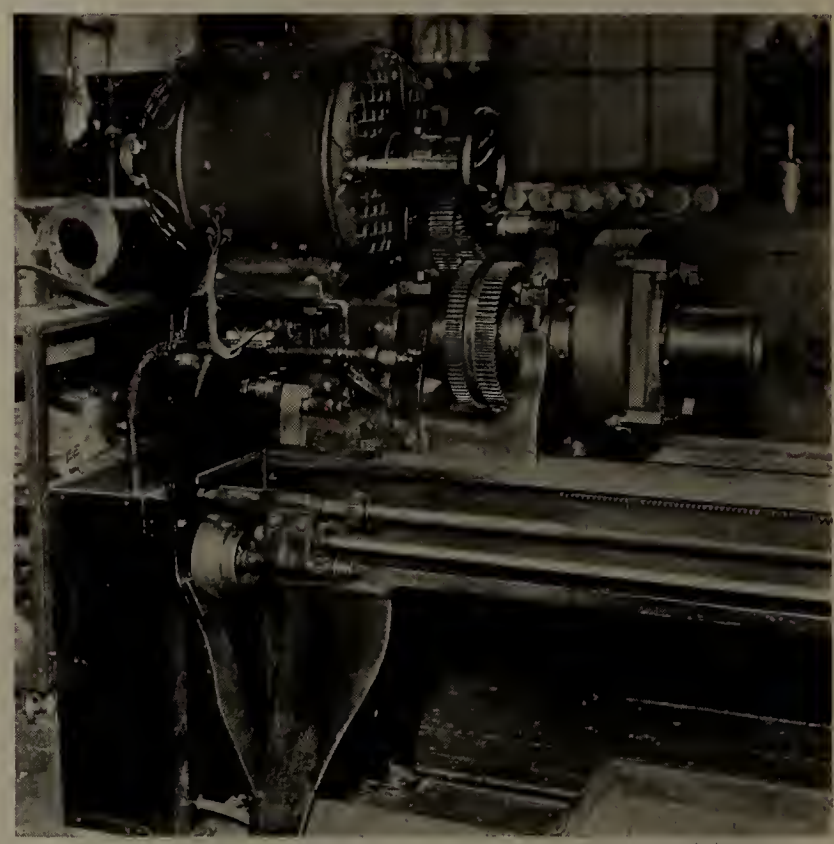

Fig. 2. Application of Motor to Mueller Lathe.

This installation is unique in several particulars. It is probably the largest installation of automatic starters for the control of individually motor driven metal and woodworking machinery. These starters are used not only for the constant speed motors, but an unusual feature is their use in connection with adjustable speed motors. Another interesting point is that all changes were made in the company's own shops. It is one of the most notable instances of belt driven installations converted to motor drive and shows

Fig. 3. A Group of Radial Drills, Each Supplied with a Motor.

what can be done in the way of increasing the efficiency of old machines to meet the requirements of more modern manufacturing conditions.

The objects in view in making the change were: 1. To effect a saving in power by making possible the use of individual machines, especially for overtime work, without running a 75 h. p. motor which was formerly used for driving the entire line shafting of the machine shop. 2. To increase the general efficiency of the shops by a machine arrangement which would afford the greatest convenience in the handling of material. Returning the equipment to active service as quickly as possible is very desirable in repair work so that any reduction in the time to make repairs is even more important than a reduction in cost.

In planning the installation a number of difficulties presented themselves at first. One problem was to have as little wiring as possible on the machines, as the motors are installed on a 550-volt, D. C. grounded circuit, power being taken from the company's own lines. As far as the constant speed motors were concerned this was overcome at once by the selection of automatic starters which could be placed on the wall and controlled by push buttons placed convenient to the operators. The only wiring needed on the machines is for the push buttons which require a pilot circuit carrying only about 1/6 ampere. In the selection of automatic starters the first consideration was the protection of the workmen from the high voltage, the second the elimination of any possibility of abuse to either motors or starting equipment. In the case of the adjustable speed motors the choice of suitable controlling equipment proved more difficult.

When belt driven tools equipped with cone pulleys are changed to motor drives it is necessary to remove the cone which in some of the older types was designed to cover a wide range of speeds with only a single back gear. On such machines it is necessary either to use a wide range adjustable speed motor, or if one of medium range is selected, to provide a number of additional gear changes.

After careful investigation of different adjustable speed motors and types of controlling equipment which could be used, the Reliance adjustable speed motor of the armature shifting type was selected for the following reasons:

1. It eliminated the electrical field resistance controller used with all other types of adjustable speed motors. The controller was considered objectionable because of the chance of electrical troubles and danger to operators due to the high voltage.

2. It permitted the use of the same type of automatic starters which had already been chosen for the constant speed motors.

3. The wide ranges possible with this type of motor reduced the number of gear changes to the minimum.

As illustrated in Figure 2, the lathes offer an excellent example of the method employed in making the changes.

As shown in the illustration the cone is replaced by a quill, the motor driving direct to this quill through an intermediate idler shaft so as to get a double reduction. This intermediate idler shaft can either be supported from the base casting as illustrated or from a suitable boss on the vertical arm of the motor and yoke. A stationary stub shaft is used for these idlers, the two idlers being mounted on a common bronze bushing.

In this case the back gear ratio on the belt driven machine which was 1:10 was changed to 1:6 using a motor

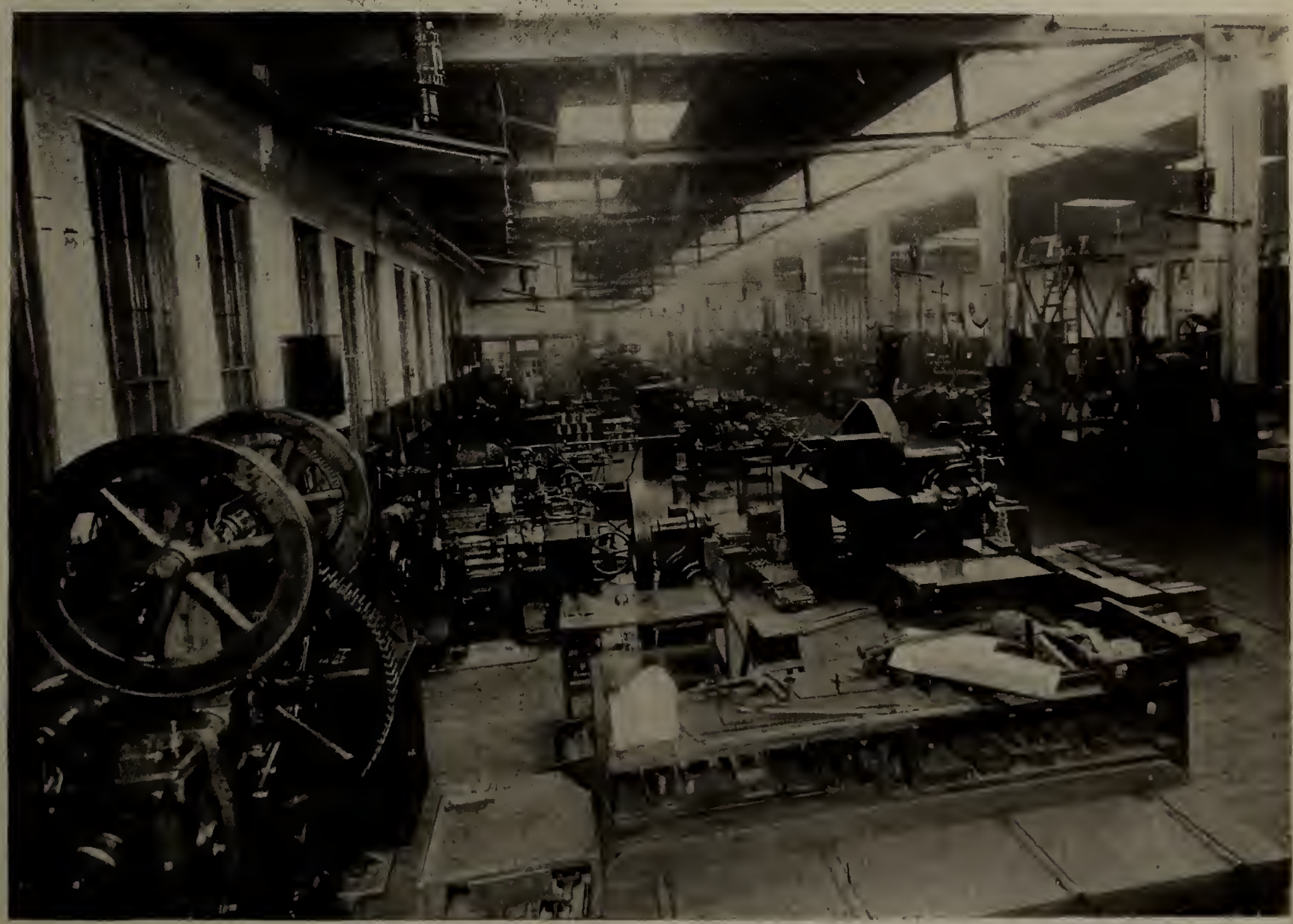

Fig. 1. General View of Chicago Rys. Shop.

with a 1 to 6 speed ratio. This gives a continuous 1:36 range of spindle speeds, which is wholly satisfactory for lathes of this size. If a motor with only a 1:3 speed ratio is used on such a lathe an additional gear change must be provided or there would be a jump or gap of over 300 per cent between the range of spindle speeds obtained with the back gear in and those obtained with the back gear out. By changing the back gear ratio to 1:6 and using a motor with

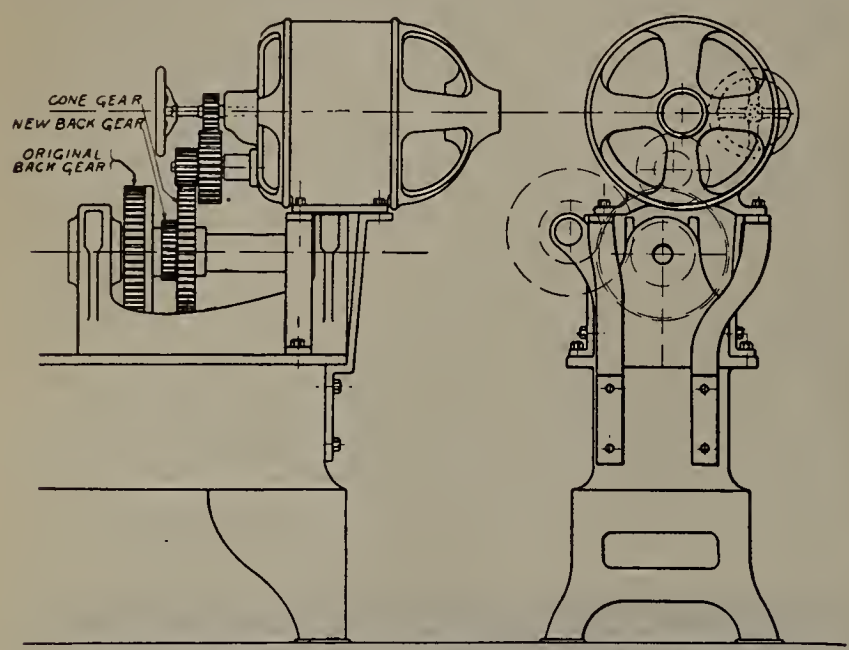

Fig. 10. Application of Motor to 30-inch Mueller Lathe.

a 1:6 speed ration a continuous range of spindle speeds was obtained without any gap.

It is exceedingly simple to change the back gear on a lathe of this character from 1:10 to 1:6. It merely means changing the diameter of the two tail gears without any change in the face gears or in the locking device between the large face gear and the quill. In making the change in the two tail gears these can be moved up to the front as shown in the illustrating allowing the motor to be set low over the head.

The method of changing the drill presses is illustrated in Figure 3. The lower cone is removed and the motor mounted in its place on a base. With this arrangement no more floor space is required than for the belt driven machine. The motor is connected to one of the steps of the upper driving cone by a belt. When additional power is needed this cone can be replaced by a wide face single pulley giving, if necessary, double the belt capacity of the ordinary cone drive and comparing favorably with an all gear driven drill.

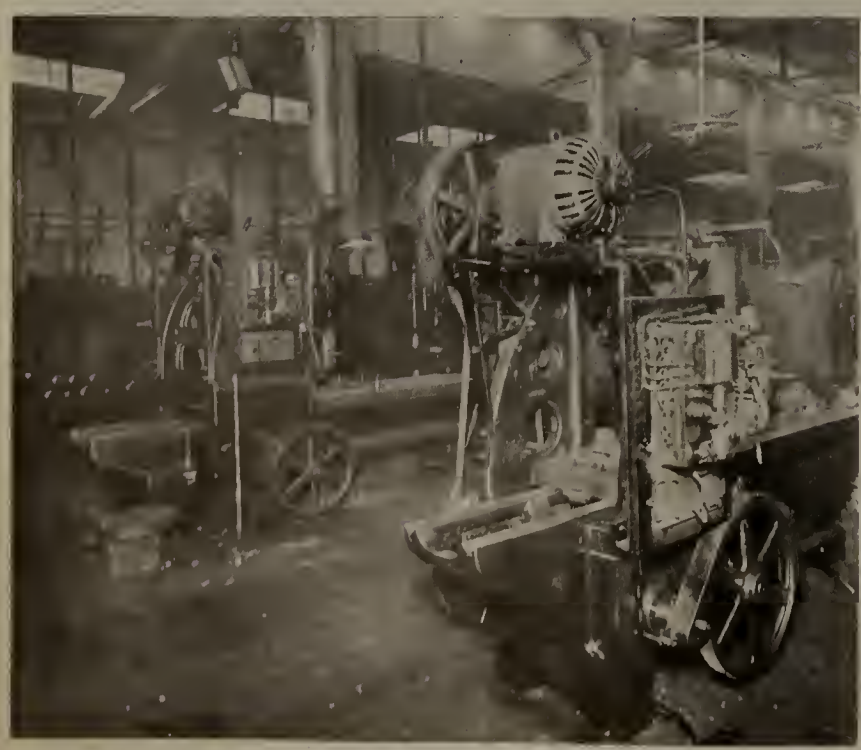

Fig. 4. Two Planers Changed from Belt to Motor Drive.

Fig. 5. Hack Saw Showing Motor Application.

Motors with 1:6 speed ranges were also used to advantage on the drills.

Figure 4 shows a 24 in. by 84 in. Gray planer and a 30 in. by 96 in. Whitcomb planer, each driven by a 5 h. p. Reliance motor.

Figure 5 shows the application of a 1 h. p. motor to two hack saws. The motor runs at 1,200 revolutions per minute.

Two wheel boring mills equipped with 7½ h. p. adjustable

Fig. 6. Car Wheel Borer Changed to Motor Drive.

speed motors are shown in Figure 6. In this illustration the wheel hoist shown in the foreground is driven by a 1 h. p. motor. The push buttons are shown at the left and the hand wheels for varying the speed at the right of the column.

In Figure 7 is shown a 2-in. Acme bolt cutter driven by a 3½ H. P. adjustable speed motor, operating at from 300 to 1,800 R. P. M.

Figure 8 shows a No. 2 Long & Allstatter punch and

shear which was equipped with a 7½ H. P. motor designed to run at 1,350 R. P. M.

A Hayes double tenoning machine in the woodworking department is shown in Figure 9. This machine was changed from belt drive and equipped with a 15 H. P. motor designed to run at 750 R. P. M. The automatic starter is located in an enclosing case on the wall. A push button is shown at the front of the machine.

Figure 10 shows the method of application of motors to belt driven lathes. The gearing necessary for the change is indicated on this drawing.

In the machine shops forty-eight machines were converted to motor drive and twenty-two new motor driven machines added. Although twenty-three of the fifty-six machines in the wood mill were newly installed, all motor applications were made at the railway shops.

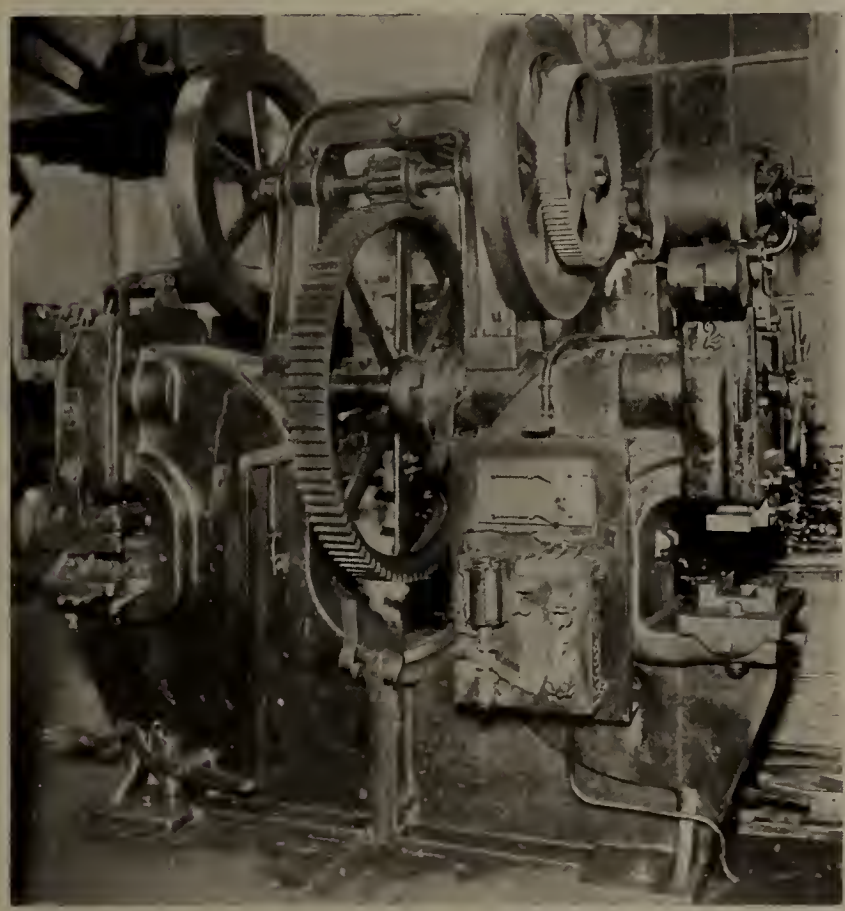

Fig. 8. Application of Motor to Long and Allstatter Punch and Shear.

List of Machines Changed to Motor Drive.

Name of Machine—	H. P.	Motor Speed
Mueller Lathe, 24 in. x 8 ft	5	300–1,800
Lodge & Davis Lathe, 27 in. x 7 ft	5	300–1,800
Lodge & Davis Lathe, 27 in	5	300–1,800
Bradford Mill Co. Lathe, 24 in. x 7 ft	5	300–1,800
Lodge & Davis Lathe, 20 in. x 7 ft	3½	300–1,800
Davis 16-in. Lathe	2	400–2,400
Mueller 18-in. Lathe	3½	300–1,800
No. 4 Bement Axle Lathe	7½	470–1,880
48-in. Car Wheel Borer	7½	500–1,500
Wheel Hoist on Car Wheel Borer	1	1,200
30-in. x 8-ft. Whitcomb Planer	5	1,250
24-in. x 7-ft. Gray Planer	5	1,250
20-in. Shaper, Gould & Eberhardt	3½	300–1,500
No. 5 Kempsmith Milling Machine	5	500–1,700
No. 1 Kempsmith Milling Machine	2	400–2,000
No. 5 Burr Keyseat Milling Machine	5	500–1,500
48-in. Elms Wheel Press	5	1,250
No. 2 Punch & Shear, Long & Allister	7½	1,350
No. 1 Cleveland Punch & Shear	5	1,250
Stiles Punch Press	2	1,500
No. 4 National Bolt Cutter	3½	300–1,800
Acme Bolt Cutter, 2 in	3½	300–1,800
2-in. Six Spindle Nut Tapper	3	575–2,300
Lodge & Shipley Lathe, 24 in. x 14 ft	10	400–1,480

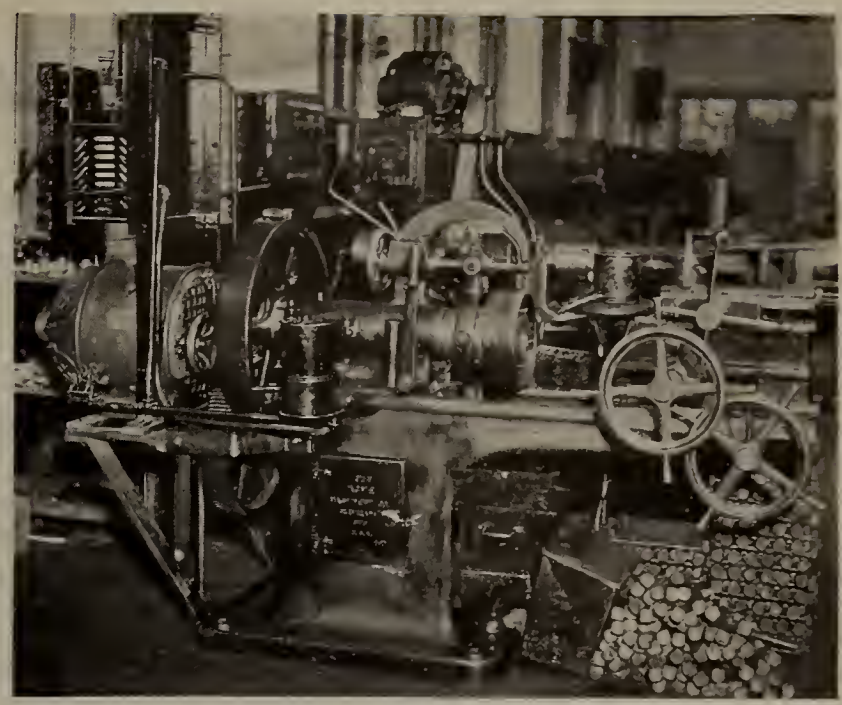

Fig. 7. Application of Motor to Bolt Cutter.

Hamilton Lathe, 42 in. x 24 ft	12	300– 900
4-ft. Bickford Radial Drill	5	1,250
No. 4 Cincinnati Milling Machine	10	1,350
No. 2B Universal Q. & C. Cold Saw	5	1,250
No. 25 Landis Plain Grinder	10	1,350
No. 2 ¼-in. W. & N. Yankee Drill Grinder	2	1,500
42-in. Car Wheel Borer	7½	500–1,500
Wheel Hoist on 42-in. Wheel Borer	1	1,200
18-in. Stockbridge Crank Shaper	3	900
24-in. Water Emery Grinder	5	1,000
No. 2 Hex. Turret Lathe	3	575–2,300
20-in. Drill Press	2	400–2,400
23-in. Drill Press	2	400–2,400
30-in. Drill Press	3½	300–1,800
32-in. Drill Press	3½	300–1,800
Whitney Milling Machine No. 6	2	400–2,000
Wright Metal Band Saw	3	950
Metal Slitting Saw	2	1,500
Barnes Drill Press	1	1,200
Double Spindle Drill	1	1,200
Speed Lathe	1	525–2,625
Marvel Draw Cut Saw No. 3 1-3	1	950
Q. & C. Shop Saw No. 1	1	950
Saunders Sons Pipe Threader	2	650
No. 1 Screw Machine	2	400–2,400

Fig. 9. Application of Motor to Tenoning Machine in Wood Working Shop.

STRENGTH OF OXYACETYLENE WELDS IN STEEL.

The oxyacetylene blow pipe was introduced into this country about seven years ago and, although its use has spread very rapidly, there is but little data available concerning the strength of welds and the best manner of making them. Bulletin 45 of the engineering experiment station of the University of Illinois, which has recently been issued, contains the results of a series of tests made by Herbert L. Whittemore, to determine the strength of oxyacetylene welds in steel, and as the bulletin contains 65 pages only the essential and practical points will be given here. It should be noted that Mr. Whittemore is now Engineer of Tests of the U. S. Ordnance Department at the Watertown Arsenal.

The experiments recorded in this bulletin were undertaken with the aim of adding to the information regarding the strength and other physical properties of oxyacetylene welds in steel, inasmuch as steel is the most important metal used in commercial construction. The number of tests was made large enough to make the results representative of the results which may be obtained under favorable commercial conditions. Although circumstances limited the work to a small range in the thickness of the steel plates, an attempt was made to determine the effect of other variables, such as thoroughness of fusion, forging and heat treatment, and flame regulation, which might have an effect on the welds. Little attention was paid to the cost of welding the test pieces, as data of cost are of doubtful value unless obtained under commercial conditions.

A welding equipment was secured from the American firm controlling the Fouché patents. It consisted of a Fouché blowpipe, a hydraulic back-pressure valve, a tank of compressed oxygen, an oxygen pressure regulator, a pair of blue glasses and a rubber hose.

The operator was governed in the regulation solely by the appearance of the blowpipe flame. Slight variations in the proportions of the gases caused relatively large variations in the appearance of the flame. This is well shown in Fig. 1, reproduced from photographs of the flame itself. The combustion of acetylene alone (see (a)) gives an intensely white flame of large volume with a heavy formation of soot at its outer end. When oxygen is added, the flame shortens (see (b)) and the combustion is more nearly complete, as is indicated by the nonformation of soot. There is then one small cone close to the tip of the blowpipe which is intensely white. This is surrounded by another white cone which in the cut partially masks the inner cone. Both are perfectly visible to the eye, particularly when observed through blue glasses. Beyond these two white cones is a nearly colorless flame of large volume.

The main object in the first series of tests was to provide practice in the use of the blowpipe, and to bring out, if possible, the variables affecting the strength of the welds. In general, the efficiency of the welds was found to be low, and a constant effort was made to find the cause of the low strength and its relation to the appearance of black or dark blue spots in the fracture.

Four flange steel plates, 26x120x¼ in., were cut into strips 1½ in. wide and 13 in. long, and these were tested in tension to failure. For welding the plates were beveled at an angle of 45 degrees and a soft open hearth No. 14 steel wire was used for filling.

The efficiency of the weld was determined by dividing the ultimate unit-stress (when rupture occurred at the weld) by the average ultimate unit-stress of the unwelded specimens, for the same section of the plate. Thus:

$$\frac{\text{Ultimate stress in weld}}{\text{Ultimate stress of unwelded material}} = \text{Efficiency of weld.}$$

This efficiency is then the ratio of the strength of the weld to the strength of the material, and measures, in some degree, the value of the welding process. The results of the first series are shown in Table 1.

In adding the wire, difficulty was found in preventing the playing of the full flame on the wire when the blowpipe was given a circular motion; so at times, it was held nearly stationary and the steel wire pushed, as rapidly as it melted, into the pool just beside the flame. Working in this way, it took some time to build up the required thickness of metal at the weld.

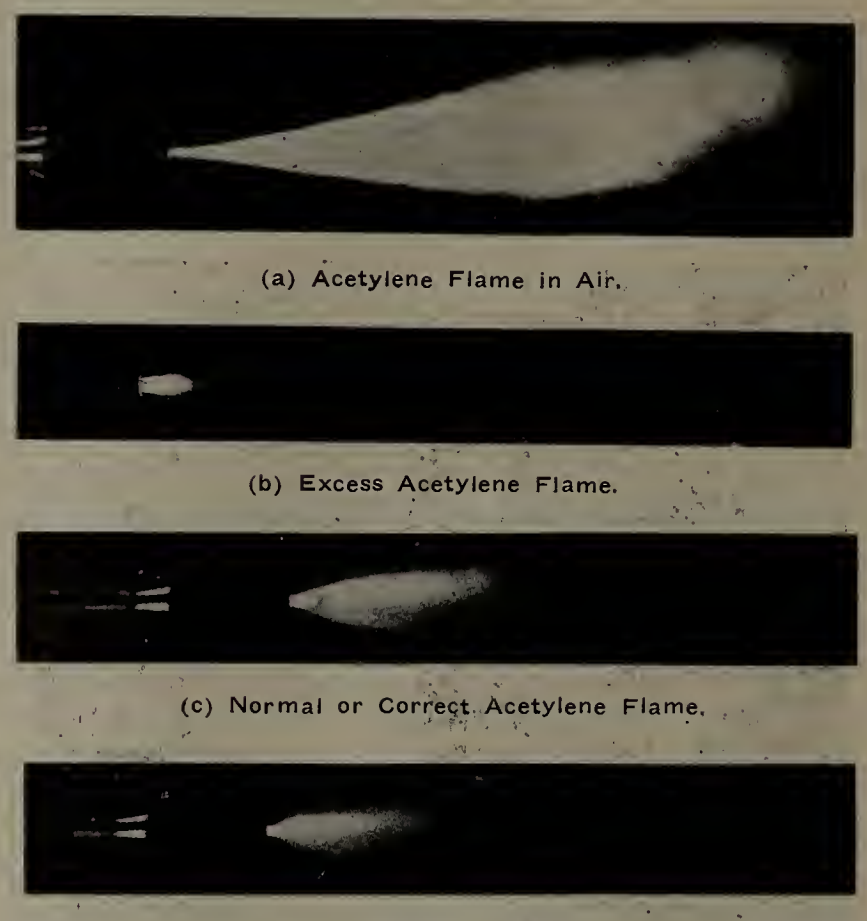

(a) Acetylene Flame in Air.

(b) Excess Acetylene Flame.

(c) Normal or Correct Acetylene Flame.

(d) Excess Oxygen Flame.

Fig. 1. Variations in the Flame of the Blow Pipe.

While the manipulation used in making the welds up to this time was satisfactory, there were some ways in which the work could be more easily performed. It appeared likely that the adoption of such changes would also result in increased efficiency of the welds. These points may be briefly summarized as follows: Some workmen have found it preferable to work toward the operator rather than away from him, as was done in these welds. In working away from the operator, almost necessarily the blowpipe flame is directed toward the unwelded portion of the plates, making, perhaps, an angle of 60 deg. with the completed weld. The blast from the flame tends to force melted metal from the end of the weld over upon colder metal with which it does not unite and to make it difficult to build up the filling material to the required thickness.

If, instead, the work progresses toward the operator, the blowpipe being held as described above, except that the blowpipe head makes an angle of about 120 deg. with the finished portion of the weld, the flame strikes the sloping surface of the molten metal at the end of the weld more nearly perpendicularly and has less tendency to displace this metal.

Instead of welding in the bottom of the groove for a short distance, then forming a pool of molten metal of the required depth above it, it seems preferable to add constantly very small portions of the filling wire to the advancing surface of melted metal in the groove. If the work is done toward the operator, this procedure is comparatively easy. The sides and bottom of the groove become melted by the time the weld reaches them and the filling wire can be added uniformly to the comparatively small area of molten metal forming the end of the weld. This area advances, gradually, parallel to itself at all times, which was not the case when pools were formed.

To assist in keeping the molten metal in place, the plates

may be inclined upward in the direction in which the weld is advancing. A rise of about an inch to the foot is sufficient.

Instead of keeping the tip of the flame constantly in contact with the molten metal it is advisable to increase the distance. If removed too far, the metal will not melt rapidly, and satisfactory work is impossible, so that experience shows that it is desirable to bring the flame in contact with the metal when working on cool metal, then gradually to withdraw the flame as long as satisfactory progress is being made.

Trial showed that the modified methods of carrying on the work aided considerably in making the welds, at least, and they were used in subsequent work. Often, after welding had started, and the metal became well heated, the flame could be removed from the work so that the distance from the tip of the flame to the metal was about equal to the length of the first cone. This apparently had no effect upon the progress of the work from the standpoint of rapidity of fusion, and did have two advantages. On account of the increased distance from the hot metal, the blowpipe did not become so highly heated, and after a short time maintained such a temperature by radiation, etc., that practically constant flame regulation was preserved. Frequent cooling of the blowpipe in water was therefore unnecessary; consequently, there were fewer interruptions to the work.

Previously, when a "back fire" occurred, the acetylene was shut off, a procedure which in a few seconds extinguished the flame within the mixing chamber and allowed the blowpipe to be relighted. By observing an experienced operator, it was found that all that was necessary to extinguish a "back fire" was to close the tip completely for an instant, by brushing the tip across the clothing, then to relight the blowpipe by directing it upon the hot metal in the weld. This procedure reduced the interruption caused by a "back fire" to a second or so, at most, during which the metal scarcely cooled at all, while previously it often became very dark red, requiring some time to bring it again to the welding temperature.

The pressure gauges attached to both acetylene and oxygen tanks enabled the amount of gas consumed for each section to be computed. Readings of these gauges were taken during the welding of many strips. The amounts of acetylene and oxygen consumed were determined and compared with the average value for a No. 7 blowpipe given in the catalogue of the blowpipe manufacturers. The measured average consumption of oxygen was 20.6 cu. ft. per hr., while 25 cu. ft. is given as the consumption in the catalogue. The acetylene consumption was 22.7 cu. ft. per hr. and the catalogue value is 15 cu. ft. The rather wide difference between the measured value and the catalogue values, and more especially the erratic fluctuations in the oxygen rate measured by gauge readings, lead to the conclusion that while the pressure gauges are sufficiently accurate to determine the volume of gas contained in the tanks at any time, they are not sufficiently accurate (or sensitive) to determine the gas used for time intervals, say, of one hour.

While too great reliance should not be placed upon the welding rates shown in the tables, either as to their accuracy or the ability of another workman to equal them, they do show that a moderate rate of welding, say, 2 to 3 ft. per hr. with ¼-in. steel plates, can be obtained with comparatively little practice. The total length of weld in these 12 specimens was about 24 ft., which at the average rate of welding of 2 ft. per hr. could be completed in 12 hours of blowpipe work. This tends to confirm the statement that some commercial shops train inexperienced men in two or three days to reasonable proficiency with the blowpipe and employ them upon their own work afterwards.

Strips G to X of the first series, inclusive, were welded after instruction and the adoption of modified welding methods. As a result the efficiencies rose, say, from 70 per cent to 75 per cent.

The work of the second series was a continuation of that of the first under somewhat altered conditions. An effort was made to determine the variables affecting the efficiency of the welds, with some success for the last few strips of the series.

In place of the blowpipe used in the first series a recent form of the Fouché blowpipe was obtained which was provided with a number of interchangeable heads, in this case corresponding to the heads of blowpipes No. 3, 4, 5, 6, 7 and 8. The size best suited to the work could be quickly fitted to the blowpipe body, the result being an apparatus somewhat lighter than the design previously used, but one operated in the same way. Special wire, recommended by the blowpipe manufacturers, was obtained from John A. Roebling's Sons Company. This was designated by them as ⅛-in. diameter, liquor finished, bright, annealed, genuine Norway iron wire.

The most noticeable difference between this wire and the No. 14 steel wire used up to this time was the absence of mill scale. If bent, the steel wire showed a coating of scale, or oxide, which flaked off. The iron wire, however, had been pickled or otherwise treated to give a clean metallic surface. When melted by the blowpipe, the steel wire showed a surface of moderate incandescence covered by irregular spots which were much brighter. While the general color appeared bright red through blue goggles, the spots seemed white hot.

Results of Strength Tests of Welds —First Series.

Strip	Efficiency per cent			Rate of Welding ft. per hr.
	Av.	Max.	Min.	
A	69.3	90.7	47.7	1.47
B	68.0	79.0	56.3	....
C	74.3	90.5	52.7	....
D	64.5	79.0	52.7	1.00
E	69.2	80.5	54.6	....
F	66.9	74.9	55.0	2.80
U	54.0	74.0	35.1	....
Y	82.4	118.0	43.5	2.84
G	69.6	75.3	61.2	4.17
H	50.6	58.9	41.0	0.80
R	76.7	86.9	68.5	1.50
X	73.9	85.5	56.6	2.50

Table 1.

Instead of the ¼-in. plates used for the first series, similar sheets from the same firm were obtainel which were ⅛-in. in thickness. Plates of this thickness seem better suited for practice welding and experimenting than either thicker or thinner ones. Each plate was divided into strips, so that all specimens lay with their longest dimension parallel to the direction of rolling. The strips were cut and beveled as for the first series, except that a sharp power shear was used instead of the cutting-off tool.

The first strip showed a rather spongy gray surface at the fracture, but as the number of strips, which were welded, increased, the fractures showed a cleaner appearance. On strip AG the molten metal was hammered frequently as it was put into place, a small riveting hammer being used. The wide and erratic fluctuations in strength lead to the conclusion that alternate hammering and welding do not produce uniform work. The fact that the average efficiency was lower than for any strip so far in this series also throws doubt upon its value. It is difficult to see how hammering can increase the density of metal which is immediately afterwards heated to fusion to continue the weld. The amount

of work required of the operator is largely increased, as well as the time.

Preheating the beveled edges of the strip an inch or two in advance increased the freedom in using the blowpipe and also increased the rate and quality of the welding. The results of this series of tests are given in Table 2. Strip AJ was forged after welding. Strip AK was welded with an excess of oxygen, the flame being shortened by reducing the amount of acetylene until it was about one-half its proper length. Strip AL was welded with an excess of acetylene. It will be noted that the efficiency of the welds increased with the number of tests made, and that a considerable variation from the normal flame regulation may be allowed without danger of greatly reducing the efficiency of the weld.

Results of Strength Tests of Welds —Second Series.

Strip	Efficiency per cent			Rate of Welding ft. per hr.
	Av.	Max.	Min.	
AB	72.1	77.9	62.5	1.32
AC	69.1	82.0	54.4	0.75
AD	78.2	94.8	72.0	1.55
AE	75.6	90.0	59.9	1 75
AF	72.0	87.4	44.8	1.51
AG	64.4	76.8	50.9	1.39
AH	69.5	88.0	56.5	0.92
AJ	85.4	124.6	51.1	1.17
AI	86.6	104.6	65.2	1.03
AK	84.7	100.5	72.5	0.90
AL	83.1	92.0	72.1	1.44

Table. 2.

The efficiency of welds in strips AK and AL is fairly representative of welds in ⅛-in. steel when fusion has occured throughout the weld.

One of the striking features of this work is the remarkable characteristic appearance of the blowpipe flame and its sensitiveness in showing changes in regulation. It seems safe to conclude that a change in the amount of acetylene of one per cent of the gas volume could be detected by the change in the appearance of the flame, provided, of course, that this occurred at or near the normal regulation. The flame is much more sensitive, also, in indicating excess acetylene than excess oxygen, so that a slight feathery flame tip is preferable to a slight or incipient shortening. All sizes of blowpipe appear to have practically the same regulation curve.

The meager amount of information obtained regarding the effect of heat treatment and subsequent working of the welded material leaves an important and probably very fertile field still to be covered. The rather remarkable results obtained by forging after welding appear to be in agreement with the known properties of metal. Highly heated steel, upon cooling, has a coarse crystalline fracture and low tensile strength. This condition can be improved by reheating to the lowest temperature which will produce a fine grain and then cooling. In this way, the finest grain and also the highest tensile strength will be obtained. Steel heated to, or near, fusion is "burnt" and greatly damaged. The injurious effects of "burning" of steel appears to be due, in part at least, to the "oxidation of the faces of the crystalline grains which compose the metal, by inward diffusion of the atmospheric oxygen" (Howe). The oxyacetylene blowpipe flame, if properly regulated, is a reducing flame as is shown by the reduction of the surface film of oxide of the filler wire, and the injurious oxidizing effect may be small in metal welded by an oxyacetylene flame. "Burnt" metal can never be completely restored to its original condition. While annealing alone will restore steel if merely overheated, steel which is "burnt" requires mechanical working, such as hammering or rolling while hot to cause much improvement.

It seems probable that the coarse crystalline fractures and low efficiencies found for these oxyacetylene welds are produced necessarily by the very nature of this or any other welding process which requires fusion of the material. It is even possible, then, that blowpipe welding may prove superior to other methods involving the use of gas or coal, since the reducing action of the oxyacetylene flame may prevent the oxidizing of the crystals found in "burnt" steel. In any case, maximum efficiencies can be obtained only by using every available means to reduce the effects of overheating. This would require annealing and, if practicable, hammering or rolling.

It is often claimed that welds can be strengthened any required amount by adding filler to increase the thickness. This, however, is obviously only a partial remedy, as the material adjacent to that where filler is added is always overheated. When rupture occurs just outside the weld, due to this overheating, the weld can not be considered to be as strong as the rest of the material.

As already stated, the appearance of the flame is a delicate indication of proper regulation. The principal precaution to be observed by the workman is to be sure that thorough fusion has taken place. The cost of operation of a blowpipe rises very rapidly as the thickness of the plate to be welded increases, and this fact may limit the field of usefulness of the oxyacetylene blowpipe to the welding of thin plates and parts and to emergency repair jobs.

A consideration of the results leads to the conclusion that thorough fusing of the material in the weld and forging of the finished weld were the only conditions which resulted in any noticeable increase in the efficiency of the welds. Forging after welding produced a decided increase in the strength of the welds and also in the ductility of the fused metal—apparently the increase in efficiency of the weld was about 10 per cent. In the three strips in which thorough fusion took place throughout the weld, the average efficiency was the highest obtained in the tests. In view of the comparisons hitherto made, the efficiency found for one of these strips, 86.6 per cent, may be expected to be fairly representative of welds in ⅛-in. steel when fushion has occurred throughout the weld.

The average technical article describing this process apparently lays too much emphasis upon the necessity for very careful flame regulation and for pure oxygen and acetylene, as well as on the value of preheating and hammering the weld as it is made, in securing high efficiency. A claim of 100 per cent efficiency is insupportable. It appears that 85 per cent is about as high as may be expected in practice if the weld is of the same thickness as the plate.

In spite of certain inherent defects the oxyacetylene process is well adapted to many welding operations, and it is likely to grow in favor as its advantages are understood.

SUPERHEATER MAINTENANCE.

The following notes were abstracted from a recent booklet on the maintenance and operation of superheaters issued by the Locomotive Superheater Co., and they contain much information of value:

A superheater which is typical of a number of styles consists of three or more horizontal rows of large boiler flues across the upper part of the boiler, each containing a superheater unit. The usual size of these flues is 5½ inches outside diameter except at firebox end, where the diameter is reduced to 4½ inches by swaging. The superheater unit is a continuous tube formed of four seamless steel superheater tubes, connected by three return bends. The front

end of these units are bent and clamped to the superheater header in the smoke box, the connection being made steam tight, either by a ball joint or a metal-asbestos gasket.

The amount or degree of superheat is the increase of the final temperature of the steam leaving the superheater over that of the steam and water in the boiler.

To secure the best results the quantity of heat absorbed by the superheater units should be sufficient to superheat the steam to an average temperature of 600 degrees F.

To prevent burning the superheater tubes when there is no steam passing through them, the front end of the large flues discharge into a chamber which is separated from the rest of the smoke box by partition plates and the automatically operated superheater damper.

This superheater damper is held open by pressure of steam from the steam chest acting on the piston in the damper cylinder and permits the hot gases to flow through the superheater flues. It is closed by a weight or a spring, as soon as the steam is out of the steam chest, and stops the flow of hot gases through the large flues.

Direct lubrication of the cylinder is recommended, and all cylinders should have an oil connection leading to the center of the top of the cylinders. If the supply of oil to the valve chamber and cylinder of the superheater is regular it will be found that the superheater engine takes but little more oil than the ordinary locomotive. Cylinder oil of high grade and high flash point is recommended.

Relief valves having ample area are recommended for the cylinder heads front and back, and the steam chest or steam pipes should have large sized vacuum valves.

Piston rod and piston-valve stem extensions are recommended in order to reduce the wear of moving parts, and permit all packing rings to float free from weight of piston and valves. Piston valve rings and bushings should be made of close grained cylinder iron.

The regular piston rod and valve stem packing may be used. Packing rings made of a mixture of 80 per cent lead and 20 per cent antimony have given satisfactory service with the highest degree of superheat.

An inspection should cover examination for air and steam leaks in front end, for any accumulation of cinders and ashes or deposits on return bends in boiler flues.

All air and steam leaks should be stopped. In the case of steam leaks between the header and the superheater units joints should be immediately tightened, if necessary regrinding ball joints or applying a new gasket to flat joints. In case a gasket is applied the joint should be tightened again after the gasket has been under steam heat the first time.

For cleaning the flues the use of air of at least 100 lbs. pressure is recommended. It should be applied through a one-half inch gas pipe, which is inserted at the back end of the flue and gradually worked forward under the superheater unit, blowing the dirt out of the front end of the flue.

In case steam is used instead of air for blowing out the flues the boiler should be under steam to avoid the condensation of water in the flue, as it would be liable to mix with the ashes, etc., and form a coating on the inside of the large flues. The superheater damper should be open in all cases while cleaning flues.

Every two months the superheater, the steam and exhaust pipes should be tested with warm water of about working pressure to make sure that all joints, etc., are tight in front end. The return bends at firebox ends should be examined from firebox end at this test. In setting the flues the prosser is used and the use of the prosser in preference to the roller is recommended whenever possible in working over the superheater flues. The prosser should not have less than twelve sections, and the rollers not less than five rolls. Inserting plugs in the regular tubes surrounding superheater flues when using roller has proved good practice.

The superheater damper and rigging should work freely, and the damper should be wide open when the throttle is open and there is steam in the damper cylinder. With no steam in damper cylinder the damper should be closed. The damper should also be closed when the blower is used in firing up.

In starting, the reverse lever should be put in full gear to insure oil distribution the full length of the valve bushing. On account of the larger diameter of cylinders used in superheater engines, the throttle must be opened slowly and special care taken to prevent slipping of the drivers.

In general, superheated steam locomotives should be operated with full throttle and short cutoff, when working conditions will permit.

The firing should be light and regular to produce as high a flame temperature and as perfect combustion as possible in the firebox.

The oil supply to the cylinders, etc., should be constant, as there is no condensed water in the steam or cylinders to act as a lubricant.

If the engine does not steam freely, make sure that the superheater damper is open. In storing engines equipped with superheaters, especially when liable to freeze, it is essential that the superheater be thoroughly blown out.

A COMPARISON OF LOCOMOTIVE VALVE GEARS.

By C. J. Pilliod.

[Editor's Note.—In studying the application of the several proprietary locomotive valve gears, confusion owing to the similarity between the "Baker-Pilliod" and the "Pilliod" should be avoided. The former is manufactured by the Pilliod Company and the latter by Pilliod Bros. Co.]

In the Walschaert valve gear the imparting motion is obtained from the crank and crosshead. The valve gear frame is attached to the engine frame which moves up and down on its springs, thus changing the position of the valve gear in relation to the eccentric crank connection. To illustrate: If the locomotive was stationary and the engine was moved up on its springs it would raise the gear and change the angle of the eccentric rod, since the eccentric crank, which is attached to the main driver, would remain stationary, thereby causing the link to be drawn toward the eccentric crank, or if the engine was moved downward on its springs the link would be moved away from the eccentric crank, thus distorting the valve movement. This is what happens when the engine is taking curves or running over irregularities in the track.

With a 28-inch stroke the eccentric crank travel is 16¾ inches, and the gear is generally designed so that the eccentric rod stands almost straight when the link is at the end of its travel. The connections are not mechanically positive and the effect of slip in the block must be taken into consideration. The effect of wear in the bearings, of course, all comes in the valve operation.

Aside, from the "Pilliod," which is a gear deriving its motion entirely from the crossheads and which has no return crank or eccentrics, and aside from the well known Walschaert, there are two prominent outside valve gears which may be designated as "Gear A" and "Gear B."

"Gear A" and "Gear B" differ from each other only in the reverse; "Gear A" uses a reverse of the Marshall type, while "Gear B" has a reverse of the Strong type. The steam distribution is the same. The imparting motion is obtained from the crank and crosshead and is affected by the movement of the engine on its springs, as is the Walschaert. The effect of wear of all bearing is directly upon the valve.

With a 28-inch stroke the eccentric crank travel is 17½ inches, ¾ inch more than with the Walschaert. Both are

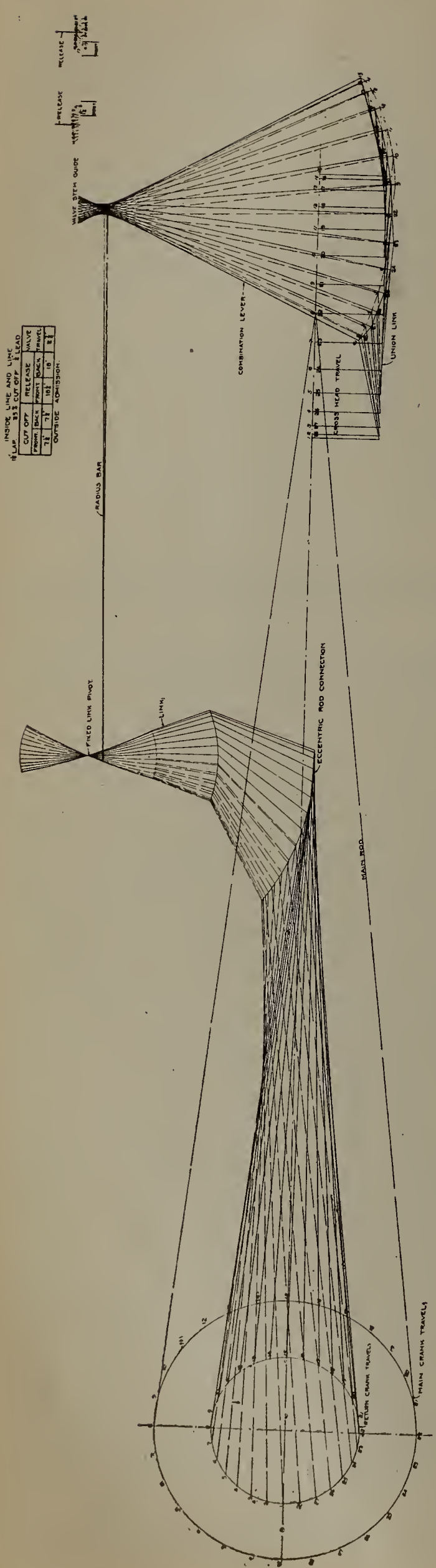

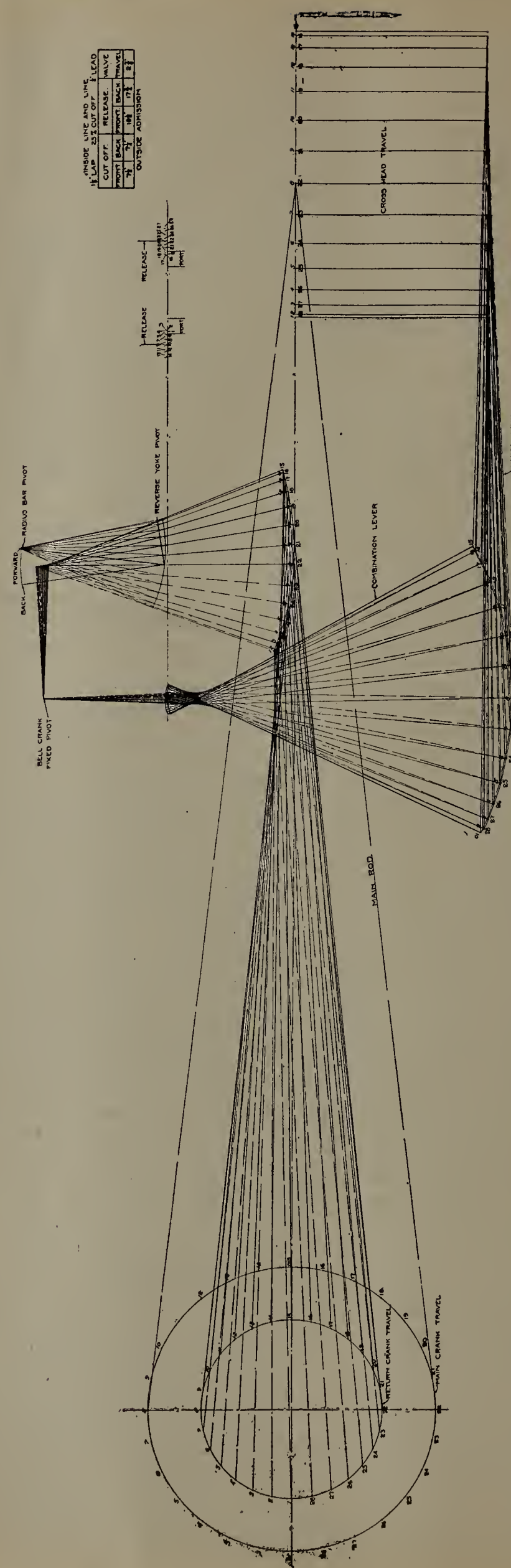

Radial Valve Gear Employing Marshall or Strong Reverse ("Gear A" and "Gear B")

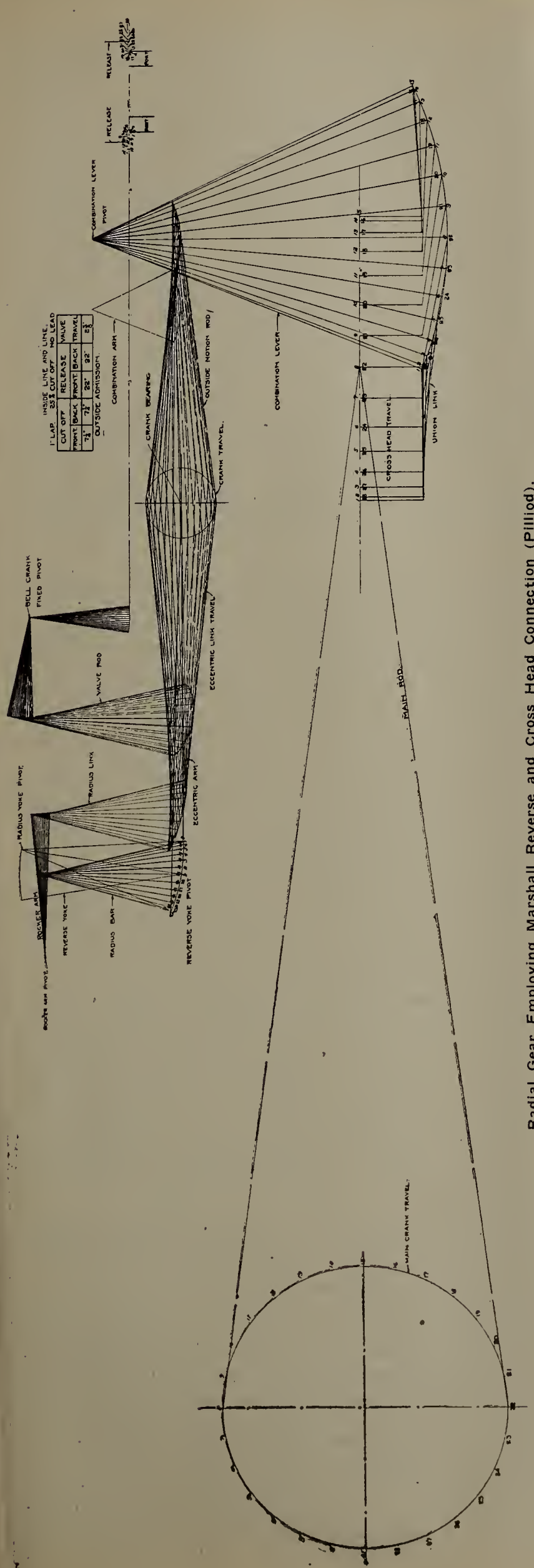

Radial Gear Employing Marshall Reverse and Cross Head Connection (Pilliod).

designed so that the eccentric rod stands almost straight when the transmission bar is at the end of its stroke.

With a 6½-inch valve travel "Gear A," "Gear B" and the Walschaert gears all get a full port opening at full gear, but this is possible only by having more overtravel on one end than on the other. They cannot get equidistant travel of the valve for each crank travel.

The makers of the two crank and crosshead connected radial gears claim that a considerable economy and increased efficiency, as well as higher speeds, can be obtained, over the Walschaert, by their use. If it is true that all three produce the same events (and this can be proven by taking valve cards of any engine equipped with the respective gears), and since the laws that govern the application of steam to locomotives apply to all three, how do these two gears obtain the better results they claim over the Walschaert? Is it due to the elimination of the slip of the block? (which, as a matter of fact, is noticeable only at full travel). It cannot be due to fewer parts, since all three have the same number of moving parts and the same number of pins and bearings.

There is reason to believe that these gears can be kept up at a less cost than the Walschaert, but this, in my opinion, is the only advantage they can consistently claim. In the matter of standardization they, like the Walschaert, must vary the length of the combination lever and eccentric crank according to the length of piston stroke. The position of the bell crank and the reverse yoke bearings must be changed for inside and outside admission, necessitating different frames.

It is possible to square any of the above mentioned gears in either motion, but not in both, and as the engines seldom run backward, they are squared in the forward motion. As they can be squared in but one motion, what will be the effect of lost motion due to wear? The result would be that whatever the effect of lost motion, it would be shown by the negative work from the opposition motion; that is, if the forward motion was square and the backward motion not square, or uniform with the engine while in forward motion, the lost motion in this position would have to be taken from the negative side in the performance of its function. For this reason we find in most present forms of valve motion of the reversible type employing a simple valve, that the lost motion is promptly discovered in the "lameness" of the engine, increasing as the lost motion increases, thereby decreasing the efficiency of the engine as lost motion increases.

Three charts are shown herewith. These charts are illustrative of the valve events of three types of valve gears at a 25% cut off. A study of the charts should prove remunerative to those interested.

The "Pilliod," while a radial gear, is easily distinguished from the other gears because of its obtaining the imparting motion from the crosshead only, and as the gear proper and the point from which it takes its imparting motion are attached to the frame, there can be no distortion of valve movement due to vibration or lateral movement of the wheels.

All connections in the "Pilliod" are mechanically positive. The effect of wear of imparting motion has very little effect on valve movement, as the gear crank is solid on the gear frame, and as long as the imparting motion gives the crank a uniform rotative movement, the wear of any part or bearing ahead of the crank cannot affect the travel of the valve, so that the wear of the eight bearings back of the crank are the only ones that affect the valve direct.

If it is true that the events claimed can be obtained with the "Pilliod" gear (if there is any question regarding this, any one interested can verify it by "running over" valves on engines now in service equipped with this gear), that if

anything can be gained by obtaining the port opening twice as quick as with other gears, a 4 per cent at full gear to a 10 per cent later release at 25 per cent cut-off, with the same relative later compression, twice the area of exhaust port opening with the same movement of piston, reduced back pressure and no preadmission, why shouldn't the "Pilliod" effect an economy and produce increased efficiency over these gears?

Now as to standardization. All parts of the "Pilliod" gear are standard for any style or type of engine using either inside or outside admission, with the exception of the necessity for varying the length of the combination lever, according to the piston stroke. No change of parts or position of bearings for inside or outside admission is necessary. The frame is standard for all engines.

The "Pilliod" is "square" in *both* motions, as an equal travel of the valve is secured during each stroke. The only effect of wear will be contraction of port opening, thus maintaining a higher engine efficiency than is possible with other gears. This is done by making the reverse end of the eccentric arm a free end, moving in an ellipse instead of in a fixed path, dissipating the effect of the angularity of the eccentric arm.

Another feature that has to do with the wear of gear is in the fact that the two arms of the bell crank are of equal length. In the "Pilliod" the bell crank is used to transfer the motion from a vertical to a horizontal motion only, while in other gears the horizontal arm is shorter than the vertical arm, thus compounding the steam on the gear.

There is one objectionable feature in the "Pilliod." Each side depends upon the other to get the rotative movement of the gear crank, so that if a combination lever breaks, the engine is dead and will have to be hauled in. So long as the crosshead is moving on both sides, the engine can go under its own steam. If the main rod is down, the engine can go under its own steam by using a sectional auxiliary rod, which weighs about 50 pounds and is about 30 inches long. This rod can be carried in the tool box and may be used for either side.

M. C. B. INTERCHANGE INSPECTION.*

By H. Boutet.

Referring to the paper read by T. W. Demarest at the February meeting of the Western Railway Club, I believe that the writer deserves great credit for the very able manner in which he has shown the desire of the M. C. B. Association to have the interchange rules made to facilitate the prompt movement of cars in interchange, consistent with safety and proper protection to the car owners.

This appears to me as plain as the matter could be stated and were it observed and lived up to in this manner by all, we would not experience the troubles that we are constantly having brought to our attention. The non-observance of the rules and lack of proper interpretations and instructions to the inspectors is what, in my opinion, is causing the trouble in a great measure.

Leaving to inspectors in different portions of the country the interpretation of the rules, we have, consequently, a variety of interpretations, so much so that if you were to work at some points of interchange and change to another portion of the country, you would think you were working under different rules, although M. C. B. Rules are supposed to govern at all points.

It is not with the actual defects that we are experiencing this trouble, but with minor, imaginary, or purely owner's defects, for example, at some points of interchange, if they find a roof board fallen off or the nails have worked out of the facia board and same has fallen off, they will demand a defect card, while at other points this is considered as an owner's defect. Some points will find a car with siding raked, caused from a nail some person has driven through the door to hold it shut and they will demand a card for same, while at other points no attention will be paid to it. This and similar conditions are what, in my opinion, has led some points to make special agreements, which so much has been said about, while if all points had the same interpretation of the rules there would be no occasion for so many local agreements.

At nearly all large interchange points all cars are sent to the receiving line yard for inspection by the receiving line's inspectors, after what is called a train inspection to see that safety appliances are in good condition and that the car is safe to go to the repair or transfer track of the receiving line.

The delivering line objects to placing it's defect cards in the hands of the receiving line's inspectors, saying that they do not propose to have another road's inspectors handle their check book and check against them for what they consider proper, but at the same time this same road will accept the records made by these same inspectors and furnish defect cards on demand.

I cannot see that there is any difference in the two forms of doing the work, if the inspectors are given the proper instructions and supervision, except that if the car is carded at the time of interchange it will save a vast amount of time and correspondence. While it is true that most inspectors at large interchange points are not familiar with making out M. C. B. Defect Cards, this could be overcome by giving them the proper instructions.

If all points in the country would work strictly in accordance with the M. C. B. Rules, as per the intent of the M. C. B. Association, in a very short time we would have but little delay in interchange, caused by the cars being carded at the time they are interchanged; especially will this be true if car owner's defects under one condition were made car owner's defects under all conditions, even in interchange, with the interpretation as outlined in Mr. Demarest's paper and railroad companies would not remove cards that were carded against them when cars are returned to their lines. A defect card properly made out and placed on a car should remain on the car until the repairs are made.

Some points, under present conditions, will make a record of every car that passes in interchange, some of them so large that they will fill one-half of a page of single space type-written letter of the condition of the car. In looking at the record of the car you would wonder how it was able to run, but on inspection of the car by a fair-minded person, you would possibly find une or two small defects that would in no manner interfere with the safe handling of the car either to the lading or safety of trainmen. As an illustration of same:

Southern car 31175 passed through one point of interchange and a record was made of two draw sills split and a cracked end sill. Upon reaching another point, some three hundred miles distant, the following record was made:

"Two draft sills broken, one end sill broken, two draft arms broken, six draft arm keys gone, one wrong deadwood, one end post broken, one end facia broken (struck), two brake levers and one bottom rod and one top brake rod, six brake key bolts gone, one inter sill broken, one solid side door broken, B end, four side door chafing irons gone, two A and two B end, bad load at two side doors, A and B, loose and rotten roof and siding, A and B ends, Sou. Ry. defect card given 12/18-10, two cast buffers gone, B end, and one air hose, no size A end at Danville, Ky., one side door stop gone, one side door fastener, gone, B end, one solid and one screen side door broken, one side doorstep gone,

*A discussion of a paper read before the Western Railway Club, February 21, 1911.

one side door fastener gone, one metal brake beam, complete, one brake lever, one bottom brake rod, two brake shoes and keys, one top brake rod and five brake key bolts, truck channel bent and one broken, two end posts broken, two corner posts broken, all end boards broken, one end door rail loose, one end plate broken, one Butler pocket side broken, two deadwoods broken, two yoke bolts in place of Rivets, A end."

This record was made Jan. 12, 1911, and the car was returned to the same interchange point on February 2, and the brakes had evidently been repaired and a new end had been put in, which had evidently been damaged after the car passed the first interchange point, and on its return to the original point of interchange, a record was made of the draw sills torn out, draft timbers down, "B" end, repair track.

This, I think, very forcibly explains my reason for recommending that the M. C. B. Association should have a corps of inspectors to travel around the country to watch the inspectors and interchange and explain to them the proper interpretations of rules, the same as the government has for safety appliances.

LOCOMOTIVE DEVELOPMENTS IN ENGLAND AND GERMANY.

By Thomas Reece.

When a new type of locomotive is brought out on a British railway it not infrequently follows that it is speedily adopted by other lines. This was markedly the case with the Atlantic 4-4-2 class, the six-coupled 4-6-0 class, and the steam rail motor-cars. The last example is that of the six-coupled bogie tank engine, or 4-6-2 type. Simultaneously with the appearance of the new engines of this class on the London and North Western and Great Central railways have come engines of this wheel arrangement on the London, Brighton, and South Coast and North Eastern lines, though in the latter case the engine is for mineral traffic. In both these cases, however, the two cylinders are outside. The engine built by Mr. Marsh for the Brighton line is a remarkably fine and powerful machine. The cylinders are 21-inch diameter by 26 in., and the six coupled wheels are 6 ft. 7½ in. diameter—a large size for a tank engine. The boiler is a very large one, the barrel being 15 ft. 9½ in. long, and the outside diameter 5 ft. 3 in. There is a total heating surface of 1,865 square ft., and the Schmidt super-heater is fitted, in this case comprising both flue tubes and smoke box tubes. The total weight of the engine in working order is 86 tons, and there is accommodation for three tons of coal and 2,300 gallons of water.

The engine is of a handsome appearance, and has an extended smoke-box and Ramsbottom safety valves, resembling the North Eastern pattern rather than that of the Great Northern, hitherto favored by Mr. Marsh. There is a large and roomy cab, with a ventilated roof, a return to the former practice of the Brighton line which Mr. Marsh has hitherto not followed. This engine is intended for express main line traffic, like the other large tank engines, which divide the work with the larger tender engines.

Mr. Marsh is also building five new Atlantic express engines, with cylinders 21 in. by 26 in. and superheaters. As there is already some talk of electrifying the line from London to Brighton, and the new tank engines are found capable of doing this run also, it seems rather a surprise that more of the Atlantic tender engines should be built.

The new 4-6-2 tank engines on the North Eeastern Ry. are for mineral traffic. Consequently the coupled wheels are only 4 ft. 7½ in. diameter, the bogie wheels 3 ft. 1¼ in. and the trailing pair of radial wheels 3 ft. 9¼ in. These engines have three high-pressure cylinders, 16½ in. diameter by 26 in. stroke; the boiler barrel is 11 ft. long, with a diameter of 5 ft. 6 in., the working pressure being 180 pounds per square inch. The total heating surface is 1,648 square feet, and there is provision for 2,300 gallons of water and five tons of coal. The total weight of the engine in working order is 195,776 pounds. It will thus be seen that this type of engine is the heaviest of the four just turned out, the London, Brighton and South Coast coming next with 86 tons, then the Great Central with 85 tons, and finally the London and North Western with 78 tons.

After sticking closely to the four-coupled type of express engine for a number of years the Great Eastern Ry. will shortly have some six-coupled express engines. On succeeding T. W. Worsdell as chief mechanical engineer, James Holden built some fine single-wheel express engines of the 4-2-2 type, and also some four-coupled engines of the 2-4-0 type. The weight of rolling stock and trains having increased, a more powerful class of engine became necessary, and so Mr. Holden brought out the celebrated Claud Hamilton class of four-coupled bogie locomotives, or 4-4-0 type. These engines have done remarkably well, and some heavier ones have recently been built, whilst many of the existing ones, as well as the 2-4-0 class, have been rebuilt with larger boilers. The very heavy coast express traffic in the summer has, however, necessitated the designing of a still heavier and more powerful type, and some new engines of the 4-6-0 type will shortly be built to deal with this traffic. At the same time more of the Claud Hamilton class are being built for the main line traffic to the north.

Of the enlarged Percursor type on the London and North Western, the nine engines of the Queen Mary class—viz., those without superheaters—are out, and most are in regular service, whilst of the nine of the George the Fifth class, with superheaters, five are actually out on the line, and the remaining four are being completed. A number of both these classes are named after directors or the chief officials of the London and North Western of former years. Twenty more of the superheated engines will shortly be built. Mr. Bowen-Cooke continues building the eight-coupled simple mineral locomotives, and more of the compound 0-8-0 class are being converted to this type.

Professor A. H. Gibson, of Dundee, recently read a short paper before the Institution of Engineers and Shipbuilders of Scotland, in which were described some carefully conducted tests on a locomotive-type boiler showing that when it was fitted with a live-steam feedheater placed in the steam space of the boiler an increased thermal efficiency of about 8 per cent was obtained at both light and heavy loads. Similar statements have often been made before, but have never been backed by satisfactory evidence or theory. Professor Gibson explains the improvement due to the heater by showing that the tube temperature will be less, and in support of this he described some experiments upon the heating of water in an open vessel by a gas flame. When the water was at 120 degrees the tank was 190 degrees and when the water was 180 the tank was 220, but when the water was boiling at 212 the tank was never hotter than 213. Assuming, therefore, that the absence of cold feed brings the water temperature up to boiling point, he estimates that the heater reduced the tube temperature by from 20 to 40 degrees and increased the heat received by conduction by 2 per cent or more. Also, referring to the second report of the British Association Committee on Gas Explosions, he estimates that the hot gases, although non-luminous, would, with the heater at work radiate considerably more heat to the colder tubes than with the heater not at work. The explanation is ingenius, but hardly convincing on a first reading.

Herr J. Stumpf recently read an interesting paper at Berlin before the German Institute of Engineers. He showed,

for example, that several locomotives fitted with uni-directional flow of locomotives are already in existence. They include one superheater goods engine on the Moscow-Kasan Ry., built by the Kolomna works, near Moscow; two superheater goods engines on the Prussian railways, built by the Stettiner Maschinbeau A. G. Vulcan; one superheater goods engine, by the same company, which was exhibited at Brussels; and two superheater goods engines for the Swiss railways, built by the Swiss Locomotive Works at Winterthur.

Since the locomotive is a non-condensing engine, said Herr Stumpf a large clearance space—in this case 17½ per cent—must be provided. The admission valves are placed in the cylinder covers, and the exhaust in the cylinder, as usual. The long piston is composed of three parts—a central mild steel sleeve or ring and two cast steel ends, dished to provide clearance space, and fitted with piston rings. The piston-rod passes through the bosses of these ends, and the nut on it draws them together. The weight of the piston and rod is not greater than that of a low-pressure piston and its rod for an engine of the same power. The exhaust occupies 10 per cent and compression 90 per cent of the stroke. On account of the large ports there is a sharp exhaust which produces a bright fire. The wire-drawing of the exhaust, which is usual in ordinary engines, does not occur; it is for this reason also that so few ashes are drawn over into the smoke-box, since in the intervals of the exhaust they have time to fall back into the fire. The energy of the blast is, however, sufficient to compensate for its intermittency. The uni-directional flow locomotive can use the steam effectively down to the atmospheric line. The exhaust of the new engine is, moreover, favorable at an early cut-off, whilst with the ordinary locomotive under these conditions great throttling of the exhaust takes place. This is lacking in the Stumpf locomotive owing to the fact that the exhaust opening is always the same, and hence the back pressure which occurs in ordinary engines with early cut-off is obviated.

But, above all, on account of the peculiar steam flow, great thermo-dynamical advantages are realized. It follows, from the fact that there can be no back pressure, owing to the large exhaust, at any speed and at any cut-off, that the steam consumption of the engine is excellent.

A series of comparative trials, lasting two months, between two Stumpf locomotives, two engines with piston, and two with drop valves, were carried through by the Prussian State Railways in order to test the relative merits of the three types. All the engines were four-coupled goods with Schmidt superheater and worked on the same line in normal service, and the tests were made with day and night shifts and under conditions as similar as possible. The following results were secured:

Locomotive.	Coal consumption per 1000 ton km... Kilos	Mean kilos	Mean pound per ton-mile	Ratio of mean Consumption
Stumpf engine	17.10			
	17.47	17.285	.062	100
Piston valve engine	20.57			
	20.57	20.57	074	119
Lentz engine	21.93			
	22.5	22.215	.080	1,285

The argument from this is that the Stumpf locomotive has the lowest coal consumption of the three types tested—19 per cent less than the piston-valve engine and 28½ per cent less than the Lentz valve engine.

CARE OF SMALL TOOLS.

By C. J. Drury, Master Mechanic, A. T. & S. F. Ry.

Economical work depends upon the tools used, the condition in which they are kept and their availability for service when needed. The manufacture of small tools should be centralized, the principal shop being equipped to do this work. With this practice the tools are made standard, and the old practice of carrying thousands of dollars worth of tool steel on racks at outside points to rust away can be eliminated. We should even go so far as to stop the dressing of tools at local points, which practice allows us to drift from our standards.

You are familiar with the great difficulty experienced when the simple little flue beading tool is allowed to be forged and finished at every division point. This is very noticeable when locomotives are transferred from one division to another.

The continued dressing of the large tools, such as used on planers, wheel lathes and other heavy machinery, soon makes them too short and they are allowed to be set aside, whereas if the practice of making and dressing them at one point is adhered to the scrap pieces may be worked up into small tools and sent to some other point where needed. How often has a certain special tool been made at some small plant, a bar of steel having been ordered ranging anywhere from fifty cents to a dollar a pound. The amount necessary for the tool is cut off, and the bar is set aside and soon forgotten. The cost of shop machinery and tools is certainly no small item on our large railways, in some instances representing a yearly expenditure of over a quarter of a million dollars.

This centralizing of the manufacture of tools was inaugurated on the Santa Fe some four or five years ago and has brought about great reduction in the tool account, as well as increased shop output. The Santa Fe at present has as near an ideal system of handling tools as any railway in the country. The tools are manufactured at one point and are delivered to the general storehouse and held in stock subject to requisition from outside points.

Requisitions made at all points or divisions must be approved by the assistant superintendent of motive power after being checked by the tool supervisor. A stock book is kept at all points, which is posted monthly, showing the tools on hand, the number and kind, also the number and kind ordered, with attached requisitions for the month's supply. This is mailed at the end of each month to the assistant superintendent of motive power for approval, and after being passed on in his office, where the requisitions are approved, changed or canceled, the book is returned to the division. Foremen at all points are supplied with copies of a catalog, showing the standard tools carried in stock at the general storehouse. The illustrations show two typical pages from this catalog.

After tools are received and placed in the toolroom for issuing to employes, the check system is used. In case of lost or broken tools, a tool breakage clearance is required, made out and signed by the foreman; it must also bear the personal signature of the general foreman. In this way we are able to locate carelessness or ignorance in the handling of the tools by the workmen. At the close of each month the clearance cards from all shops are sent to the supervisor of tools. Information is thus obtained regarding defective design and construction of tools and recommendations are made for the improvement of the tool service.

The tool supervisor for the system sees all requisitions for tools and shop machinery. He is familiar with the equipment at each point. For example, a requisition may be made for some machine, perhaps an emery wheel stand; the tool

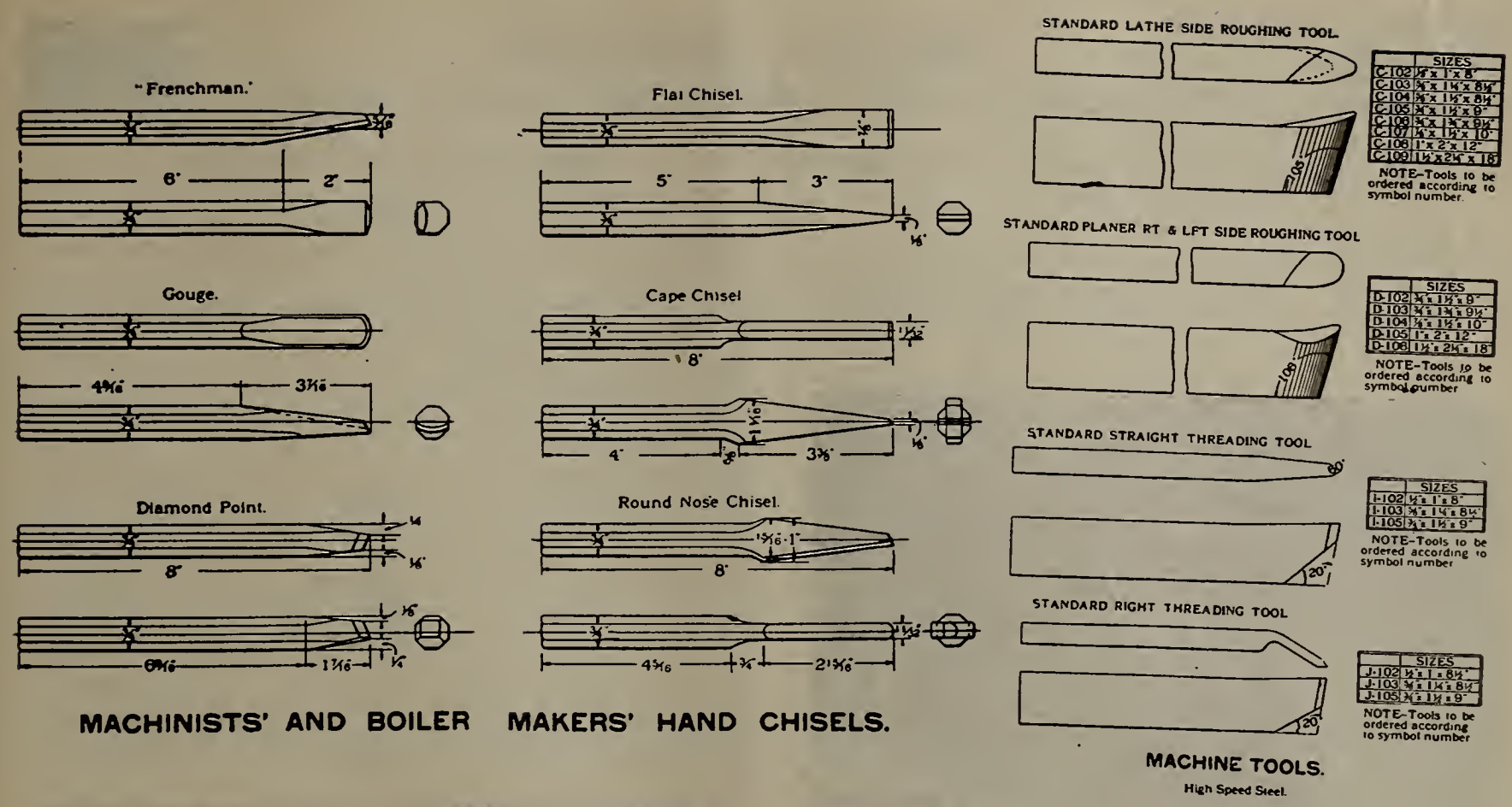

Pages from Tool Standard Catalogues, A. T. & S. F. Ry.

supervisor, being acquainted with the tool condition of the system, may be able to fill the requisition from some other point, saving the purchase of new stock. This practice obviates the keeping of expensive tools idle in one place when they are needed in another.

To efficiently maintain these tools we have found it important that the operation of our machines be specialized. Our men thus become more proficient in the care of handling of their machines and tools than if switched from one machine to another. The constant changing of men on machines also allows the efficiency of our shop to decrease. The apprentice instructor should impress upon the boy the necessity of carefully handling his machine and regularly oiling, and of keeping the bearings properly set up and adjusted, so that the machine can be crowded to full capacity without a breakdown.

Special men should be assigned to the repair work of machines, motors, shafting hangers and belting. We not only get better results relative to the work performed, both quality and amount, but lessen the liability of accident. The proper maintenance of pneumatic tools is most important in the handling of an efficient shop. Experience has taught us that the maker's instructions regarding the care of such tools are very good rules to teach our apprentices and mechanics. These should be posted throughout the shops, and the foreman should see that they are rigidly carried out. It must be understood that air, steam and water leaks around the plant and shops help to depreciate the machinery. Boilers, air compressors and pumps soon wear out. The foremen should follow this up closely, seeing that such defects are given attention at the proper time, which will help the tool account. The toolroom foreman, in making his weekly or monthly inventory, should be as eager to report a surplus tool as he is to order a needed one, thus helping out some other toolroom without any increase in the account, at the same time getting credit for his own shop.

In solving the tool question we find that to carry on an efficient system we must keep in vogue the following rules:

Centralize and standardize the manufacture.

Systematize the distribution.

Specialize the operation.

—Santa Fe Employes' Magazine.

PUNCTUALITY RECORD, N. Y., N. H. & H. R. R.

One of the advantages claimed by advocates of electrification of main line roads is reliability of operation. It has been unofficially stated several times recently that the New York, New Haven & Hartford had practically no motive power delays in handling the entire passenger traffic of its New York end by Westinghouse electric locomotives and multiple unit trains, notwithstanding the change over from steam to electricity at Stamford.

Passenger Train on Electric Division, N. Y., N. H. & H. R. R.

From reports of train operations in New York State during January, recently given out by the Public Service Commission, it appears that the New York, New Haven & Hartford made the best showing of any road in the state, with 90 per cent of its trains on time. The report is especially interesting in view of the fact that the New Haven is extending its single-phase electrification to its Harlem division and another branch, and reported as planning extension to New Haven.

Of the roads entering New York City it is interesting to note that three of the electrically equipped roads, namely, the New Haven, Long Island and Pennsylvania, stand high with 90, 86 and 84 per cent respectively.

Shop Kinks

An item good enough to publish is good enough to pay for

WELDING A LOCOMOTIVE FRAME WITH LIMITED FACILITIES.

The illustration shows a weld in the front end of an engine frame, which was made by R. M. Jages, master mechanic of the Zuni Mountain R. R. The locomotive was taken from the scrap track and placed in service after general repairs, part of which included the welding of a broken upright on

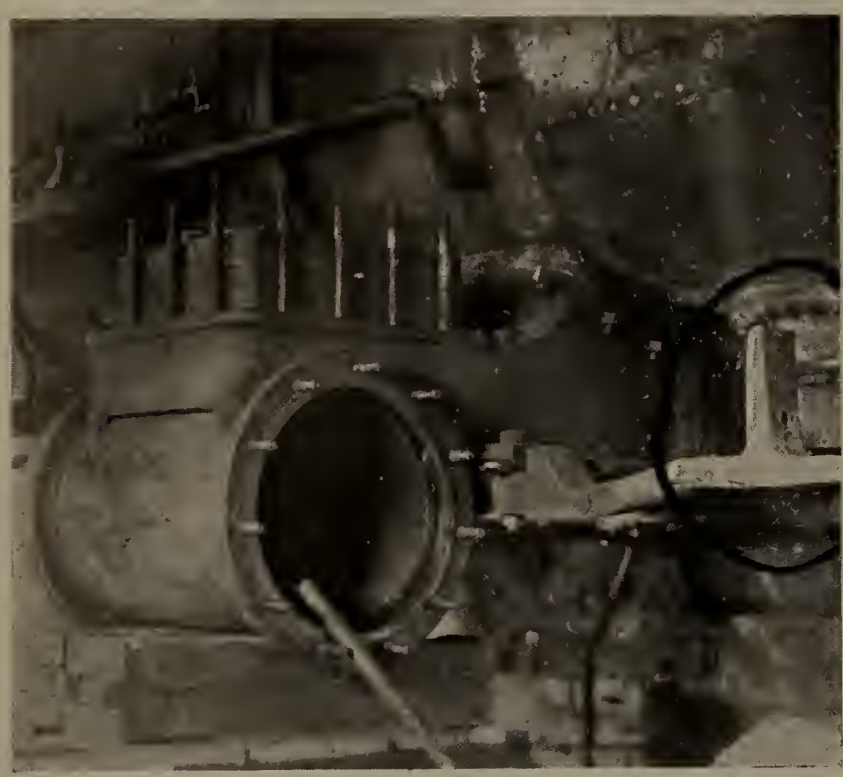

Weld in Engine Frame.

the front end of one of the main frames. The weld as finished is outlined in the photograph.

A temporary furnace was rigged about the broken frame and a crude oil burner used in connection with coke furnished the heat. The short piece was meanwhile heated in a forge. The weld was finished by the sledge method and the union seems to have been perfect.

Mr. Jages has lately resigned his position as above mentioned and has entered the service of the Santa Fe.

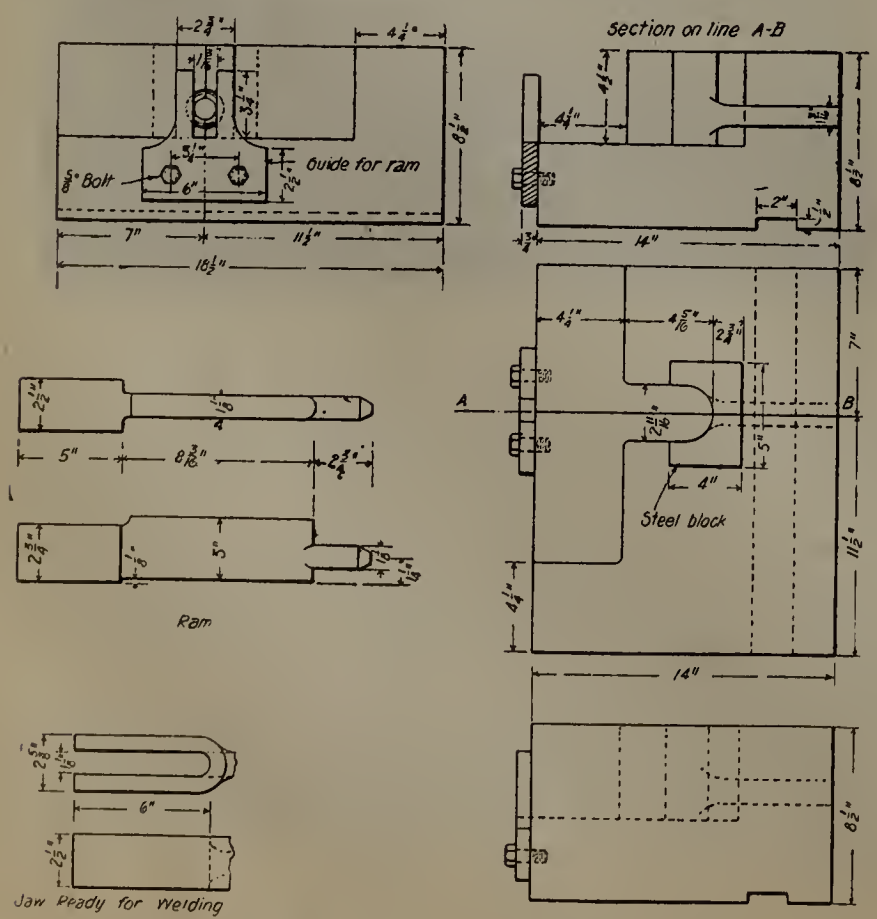

Fig. 1. Dies for Bending and Punching Jaws.

DIES FOR BRAKE ROD JAWS.

By W. H. Fetner, M. M., Cent. of Ga.

The accompanying drawings show dies for forming brake cylinder push rods, in use at the Macon shops of the Central of Georgia.

Fig. 1 shows forming dies for bending and punching the jaw before welding. Fig. 2 shows dies for welding and rounding up the ends of jaw. Fig. 3 shows dies for punching brake pin holes in jaw. To complete the entire jaw it will be noted that only three operations are necessary: first, the bending and punching of jaw for inserting rod for welding; second, that of welding and rounding up end of jaw, and third, the punching of brake pin holes. This method of punching on forging machine is very much cheaper than drilling, and very much more satisfactory than punching the jaw before welding. It is almost impossible, in punching a jaw cold, to get the holes properly lined after being bent, and a considerable number are lost on account of material splitting; but with this die the holes are in absolutely perfect line and no danger of losing a single jaw on account of splitting. These dies can be applied to a 4-in. machine.

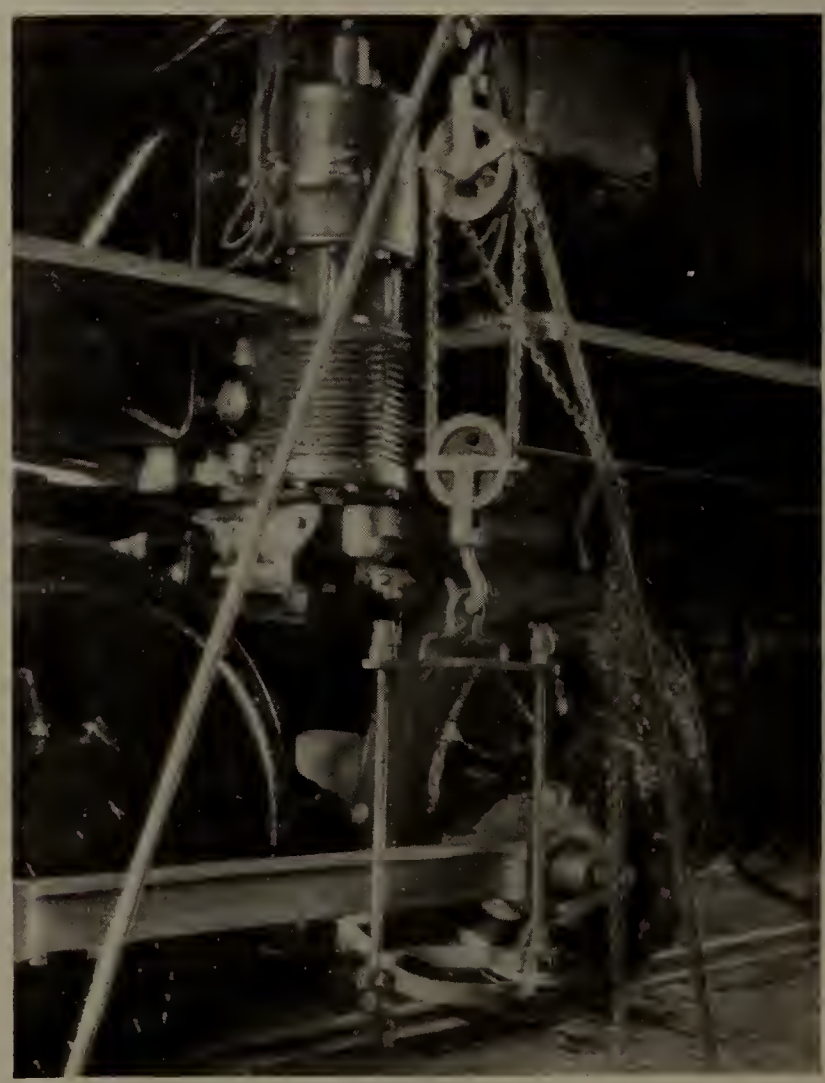

Air Pump Hoist, A. T. & S. F. Ry.

REMOVING AIR PUMPS.

The Corwith (Chicago) roundhouse of the Santa Fe is not fully equipped with air cranes, and in order to provide a means of easily removing air pumps from the engines, the simple apparatus shown in the photograph was devised. It consists of a two-legged stand set up on the running board to which is hooked a block and tackle. The frame which is clamped around the air pump is shown suspended from the tackle hook. The cross piece at the top just underneath the nuts has a hole in the center which fits down over the nut at the top of air pump and thus allows the pump to be lowered without danger of its falling out. The equilibrium of the stand is maintained by running a rope to the dome.

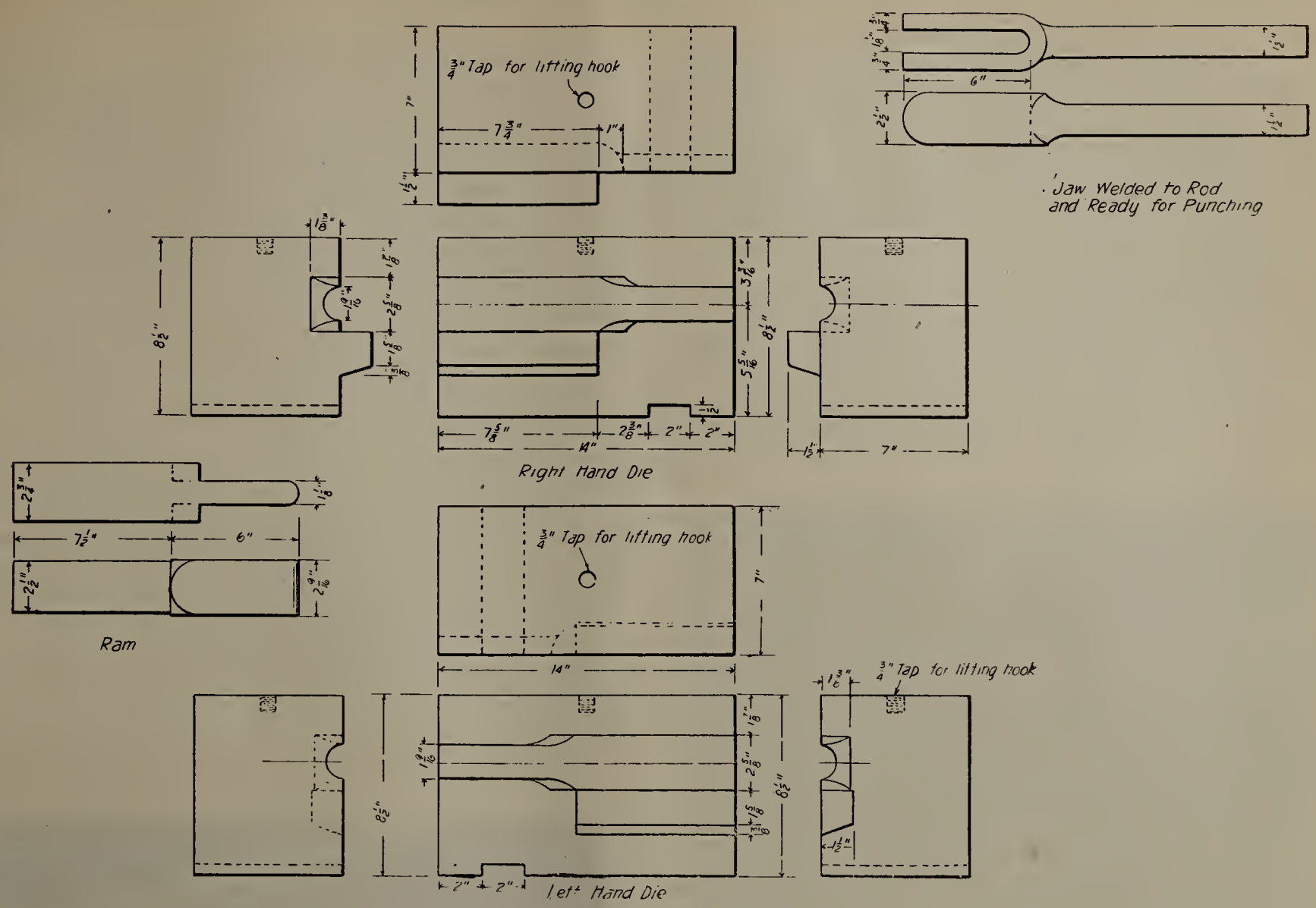

Fig. 2. Dies for Welding Jaws on Push Rods.

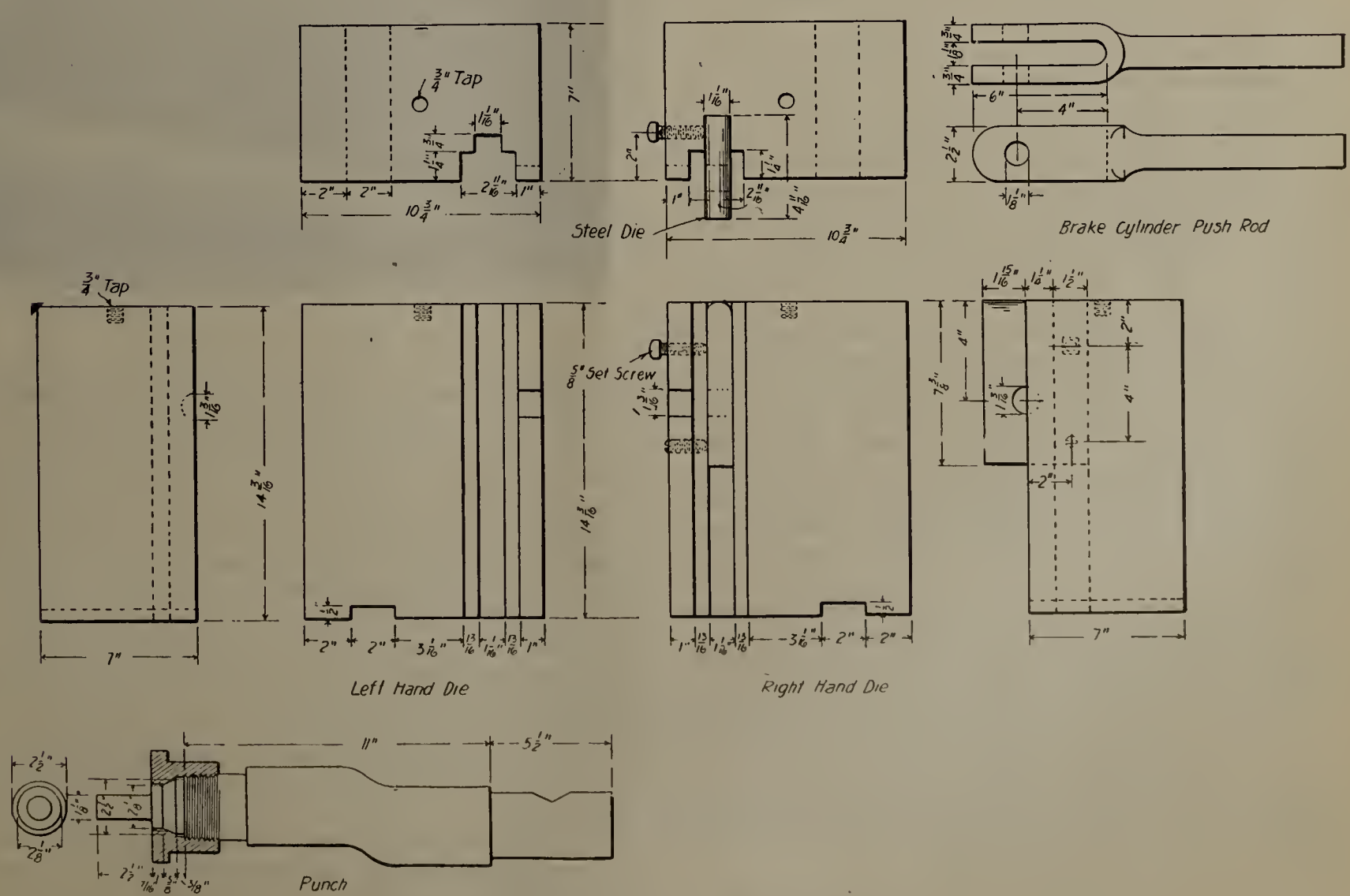

Fig. 3. Dies for Punching Push Rod Jaws.

LIFTING MACHINE FOR LARGE RAILWAY CARS.*

By A. Berger, Chief Engineer, Belgian State Railway.

When twelve years ago the question arose of replacing the first-class carriages, which were just being abolished on the Belgian State Railway, by bogie saloon carriages weighing about 34 tons, it became necessary to consider the inspection of these carriages, particularly as regards the lifting of the bodies and the easy repair of the comparatively-complicated underframe of the new carriages which were going to be used.

We undertook to work out the machine described in this note and determine the dimensions and design of all its different parts; the machine was then built at the Malines workshops. After final adjustment it was set up at the workshops built by the Sleeping Car Co. at Slykens, near Ostend, and since then it has been in daily use for lifting the carriages brought to those workshops for inspection and repair..

The machine essentially consists of two long double girders, 59 ft. long, 2 ft. 3 9/16 ins. deep and with flanges 1 ft. 1 15/16 ins. wide; the two webs of each girder are 7⅞ ins. apart.

At each end of the girder, a large screw passes between these webs; this screw has a diameter of 2 31/32 ins. with a projection of 19/64 in. for the square thread.

The four square screws thus placed near the four corners of the machine are half with a right-hand thread, half with a left-hand thread, and they are used for lifting the carriage. With this object in view, they are turned by means of toothed gears placed at the top of the screws, and these gears are operated simultaneously by a series of shafts and toothed bevel wheels, so that the number of revolutions described by all the screws is exactly the same; consequently the main girders are lifted quite uniformly and horizontally.

The transmission consists of two pairs of pulleys, fast and loose. To each pair there is one belt, straight in the one case and crossed in the other, so that by shifting the belts we can make the gears and screws turn either in one direction, or in the opposite direction, and so either raise or lower the carriage we are dealing with.

The whole installation is placed in a pit; the rails which accordingly are between the longitudinal girders are supported on separate columns. This makes it possible to see, without any difficulty, all the details of the lifting gear, and on the other hand makes it easier to do any work necessary on any parts which are under the body of the carriage.

When the carriage has been placed between the girders, it can be supported for lifting purposes in two ways. The first consists in placing iron cross-girders below the carriage, these cross-girders being supported on the longitudinal girders, and to use packing pieces of wood for wedging the cross girders. This method is adopted when carriages of varying patterns and lengths have to be dealt with. But actually the carriages which have to be dealt with at the workshops of the Sleeping Car Co. have always, or nearly always, the same length from bogie center to bogie center.

In order to take advantage of this particular feature, swing brackets on strong pivots are arranged at the side of girders, and can swing back against the web of those girders.

They are swung back in order to allow the carriage to enter; once the latter is in place they are swung through an angle of 90° and are then under the sole bars of the carriage. Joists are used as packing; and the brackets are also kept in place by hooks taking into eyes; and the carriage, supported at each side only immediately above the bogie bolster, is then lifted by the machine.

*Bulletin of the International Railway Congress.

When calculating the dimensions, the following were successively taken into consideration:

(a) A saloon carriage of the Sleeping Car Co.; this vehicle weighs 34 tons; there are four axles weighing 2,865 lbs. each, 11,460 lbs. the lot; there are two bogies and accessories weighing 5,290 lbs. each, or 10,580 lbs. the two; total, for that part not lifted by the machine, 10 tons. Thus 24 tons are left for lifting.

(b) Under the same conditions, a bogie carriage of the Belgian State Railway represents a weight of 16 tons, which has to be lifted.

(c) Finally the so-called "large-capacity" carriage of the Belgian State Railway, having three axles; this represents a similar weight to be lifted.

The weight of the girders was estimate at 134.4 lbs. per foot, or 7,937 lbs. for each girder.

In designating the machine, the chief desideratum was to avoid any bending of the screws, and for this reason the lifting nut can move about two horizontal trunnions.

It is to be noted that when brackets are used for lifting the body of a carriage the girder is acted on by a torsional stress. This is resisted at each support by two guide rollers which take against uprights.

This torsion was calculated as follows:

The weight of a carriage of the Sleeping Car Co. being 24 tons (part to be lifted), each support will receive a load of 6 tons.

The supports being 2 ft. 3 9/16 ins. from the end supporting points of the longitudinal girders (center line of

Fig. 1. Lifting Machine.

the lifting jacks), the torsion will only make itself felt at that length, having a uniform value in the intermediate length, that is between the supporting brackets.

Given the eccentricity of the points at which the loads were supported on the brackets, a certain torsion of the girders was to be feared.

Calculation showed however that with a load of 6 tons per bracket, the angle of torsion would only be about 0.0074°, that is to say that the amount by which the cross-section would become twisted at its extreme points would only be 0.00252 in.

In the case of the carriages of the Belgian State Railway, which are lighter, the torsion would naturally be even smaller and hence negligible.

The screw has been calculated in assuming a load of 13,225 lbs., due to the vehicle, plus 3,970 lbs. for half the girder, total 17,195 lbs.

Its diameter was fixed at 2 31/32 ins., taking the equation for a vertical load into consideration; this corresponds to a factor of safety of 10.

In accordance with the rules laid down by Reuleaux the

screw thread was given a pitch of 19/32 in., and the nut a thickness of 4 23/32 ins.

The gearing between the transmission and the lifting nut has a reduction ratio of 1:0.054.

When the transmission therefore runs at 200 revolutions per minute, the number of revolutions of the screw is 0.054 × 200 = 10.8 per minute; this corresponds to a lift of 6⅜ ins per minute, and to a useful work of 607.58 ft.-lbs. per second; or hardly 1.5 horsepower, allowing for friction.

The rollers which transmit the load produced by the torsion, to the supports or girders, each support a load of 12,125 lbs.

Their diameter has been fixed at 2 29/64 ins.

Finally the main uprights are supported on bedplates 5 ft. 4⅛ ins. wide and secured to them by means of strong gusset stiffeners.

Assuming that the main upright is en castré at the bottom, and that the outer upright acts as support to the inner upright, we find by calculation that the greatest tensile stress is 6,542 lbs. per square inch.

The strength of the machine is accordingly such that it could if necessary lift much heavier loads than the 24 tons for which it was originally constructed.

The machine as described was put up some ten years ago at the workshops of the Sleeping Car Co. at Slykens near Ostend; it has since been used every day for lifting the carriages which the company has been introducing in the Ostend service, which are becoming heavier and heavier.

Although it is frequently used for lifting carriages for purposes of periodic inspection, the quickness and the ease with which the machine works have led to its frequent use for lifting carriages which come to the workshops for some quick repair, such as replacing an axle and pair of wheels, a double plate spring, etc.

It often happens that carriages which have arrived at the workshops at 10.30 a. m. are already to leave at noon, after having been lifted, repaired, and lowered.

The arrangements at the Slykens repair shops make it possible to unfix the bogies on each side of the carriages and accordingly limit the raising of the latter as much as possible, as one of the bogies need not pass below the brake gear or lighting apparatus hung from the frame of the carriage.

Thus as the machine is set up in a pit, and as at either end suitable accommodation is provided for any work on the bogies, it is possible at one and the same time to inspect, repair and adjust the brake gear and the gear connected with the body and the elements forming the bogie proper; similarly the repaired bogies can be put in place, the adjusting operations in connection with the brakes, the suspension, the steam heating, etc., can be carried out by a relatively large number of men and with the utmost facility.

In the conditions under which this work is carried out at Slykens, the lift is limited to a height of 2 ft. 7½ ins., and this operation takes 5 minutes. The power required is supplied by a small steam engine which receives steam from the boiler used in the workshops for brake trials, heating trials, etc. Lowering takes just as long as lifting.

Experience gained during a very large number of inspections shows that hardly half an hour elapses between the moment when the carriage arrives at the workshops and the moment when the journals are taken out of the axle boxes; that is to say that it has been possible, within this short space of time, to lift the carriage, to take away the bogies from under, to lift the bogies in their turn, to open the boxes and to take out the journals. It has moreover to be noted that only the lifting of the carriage is effected mechanically; the lifting of the bogies, their operation and all the other operations in connection, are carried out by man-power without other assistance than jacks or pulley blocks.

At the same workshops there are two sets of ordinary jacks for lifting the same carriages at other places, so that it is possible to make a very short exact comparison between hand-lifting, which requires sixteen men plus a foreman, and machine-lifting.

The latter is three times as quick; hand-lifting under the conditions just described takes about a quarter of an hour.

As regards capital outlay, a set of eight jacks with four cross-girders suitable for lifting the carriages of the Sleeping Car Co. cost $500, while the machine described cost about $1,500, erection included.

The machine at Slykens workshops lifts, in round figures, about 200 vehicles per year.

Fig. 2. Lifting Machine.

We may mention if the machine has only eight supporting brackets, this is due to the fact that when the machine was built the distance between the bogie bolsters was 42 ft. 4 ins. in the case of the carriages of the Sleeping Car Co. and 31 ft. 2 ins. in that of the Belgian State Railway; but the longitudinal girders make it possible to slide cross-girders below the body of the carriage, which act like those used with the old hand jacks; and the machine can deal with carriages having a length over buffers of more than 69 feet.

Taking it altogether, if we compare this installation with some other much more recent installations at other workshops, we find that we have the advantage of a much quicker lift, as well as the great convenience of a pit making accessible all the parts which have to be inspected, whatever the length of the carriages and the number of axles; while if mechanical or electrical jacks have to be moved about, and the condition of lifting the four corners of the carriage by strictly equal amounts is observed, it is rare to have everything ready for work, in less than an hour, and then the lifting operation takes another quarter of an hour.

In the case of the Slykens machine, it never takes as much as a quarter of an hour from the moment the carriage arrives at the workshops till the moment the running gear is disengaged from under the body.

The suit of the U. S. Light & Heating Co. vs. J. B. N. Electric Co., Gould Coupler Co. and John W. Jepson, involving patent applications Serial No. 404,271 and Serial No. 404,272 in the Western District of New York before Judge Hazel, has been decided in favor of the U. S. Light & Heating Co.

THE OXY-ACETYLENE PROCESS AND THE STEEL CAR.

The applications of steel plates in recent years afford, when combined with older applications, evidence that we have in them a new constructional material. The most significant of the recent uses are perhaps those made in connection with the building of freight and passenger cars. It is not so many years since the first steel freight car was built. Today it is the highest type of construction and is in general use on the best railroads. The steel passenger coach is still a novelty, although it is pretty evident that it has come to stay. Three principal problems have risen in connection with steel cars and fittings: (1) the making of a strong joint, (2) making this joint invisible, and (3) the performance of the work by a method which would involve only the parts in the immediate neighborhood of the joint. The great strength of the riveted joint has made it a favorite in many locations on the steel car. But the riveted joint, even where the rivets are countersunk and the heads are filed or ground flush, is not an invisible one, for the crack remains. Soldering is sometimes used in this connection, and at times with success. Soldering has also been used alone where strength was not required. There are, however, two great objections to the soldered joint: First, it is weak, having only about 40 or 45 per cent of the strength of the metal united; and second, it has a different coefficient of expansion from that of steel.

The process of welding by the oxy-acetylene torch seems to afford a very practical and economical solution. The joint has 80 or 85 per cent of the strength of the steel itself, the joint can be made invisible and the effects of its application are local.

The writer has recently had opportunity to investigate some applications of the oxy-acetylene process to steel car construction of the highest class, which was being done for the passenger departments of certain leading railroads. On the coaches for one road, the joints of the roof plates are being closed by the oxy-acetylene torch. On a standard car, the roof joints total about 232 lineal feet. The principal joints are transverse, extending clear across and at either end is a longitudinal joint several feet in length where the right and left hood plates meet. The metal of the roof is perhaps 1/16 or 3/32 in. thick. A difficulty that has been met in such work is the tendency of the plates to bend downwards and form a groove with the joint at the bottom. Such groves may be a couple of inches deep. On these cars, this tendency is successfully dealt with by using a little T-bar. The edges of the plates are riveted to the arms of the T; the web lies immediately underneath the joint. The oxy-acetylene process is employed to effect a waterproof closure. Those familiar with the application of this method will perhaps be ready to grant that there must be some relation between the size of the welding stick and the weight of the work in the immediate vicinity. The T-bar so increases the capacity for the absorption of heat that a heavy wire, ⅛ in. thick, is employed. The welding is done economically both as to labor and consumption of gas. Conditions differ on different parts of the roof. A flat rate of 4 cents per lineal foot is paid for the labor and the gas expense is estimated at about 1½ cents. The total for the entire roof is thus about $12.75. This is practical work being carried out on a commercial scale. The labor expense of 4 cents is to be regarded as thoroughly reliable. It is not necessary in butt welding such thin sheets to chamfer the edges. The roof plates are perhaps 7 feet across. The T-bars have a metal thickness of ⅛ in., the arms are about 1 in. wide and the web about 1½ ins. deep. The acetylene is supplied from an overhead pipe of ¾-in. size, and is brought to the point of use by flexible tubing. This method of sealing the joint is superseding such procedures as riveting a flat strip to the edges of the two roof plates and inserting some waterproofing material between strip and plates.

Another example of welding on steel coaches relates to the joints of the panel frieze. This is a flat longitudinal panel with a molding above and below. There are three sections on one side of a car. The pieces are themselves straight, but the joints must be such that when in place the center is ⅜ in. above the level of the ends, which are perhaps 60 ft. apart. This arrangement is to provide for the effect of putting the load on the car. With the load on, the frieze will be approximately level. When the load is removed it will spring back. It will readily be understood that such changes of conditions will severely test the joints. Formerly, soldering was employed, but it was quite expensive and not so satisfactory because of the weakness of the joint. The actual figures for soldering were probably excessive; the superintendent thinks, however, that it would reasonably cost $9.00 per car. By the oxy-acetylene process, the work is being done for $4.50. The plates here are 1/16 in. thick. In making the weld, work is begun at a point distant one-third of the total width from the side which is to be uppermost when the frieze is in final position. Beginning at this point, this upper third is first welded. However, by beginning at the same point as before and welding the remaining two-thirds, this camber is eliminated and the correct one introduced. There are no supporting strips riveted to the frieze; the plates are held together by the weld alone. This procedure is being applied to cars for one of the railroads to which reference has been made.

Closing Joints Between Roof Plates, Oxy-acetylene Welding.

Another piece of interesting work in steel car construction relates to the mortised joints of door frames. It is very necessary that this shall be a perfect piece of work. It presents, however, no real difficulty to the oxy-acetylene process. While speaking of door frames, attention may be called to an experience in connection with some door-headers. It was found in the case of five cars that the ten door-headers were each ⅜ in. too narrow. The old remedy, so it seems, would have been to tear out the frames, involving an expense estimated by the superintendent concerned at $5.00 per door. However, a strip was successfully welded on, correcting the defect. The cost of welding and subsequent filing was estimated at 20 cents per door. This economy speaks for itself.

The diamond shaped window frames used on some coaches are made of 3/32-in. plate and have four mortised joints each. Oxy-acetylene welding is employed here. Again, similar joints in the rectangular deck frames of other cars being built are also welded by the same process. In a single car, there are upwards of 176 such joints, or about 30 lineal feet of welding. In certain construction, the ventilator frames have a cast iron fitting which is attached interiorly

to each upright. If a bolt and nut were used, uncertainty would ensue as to the solidity of the attachment. But with the oxy-acetylene welding process, the gray cast iron and the hot rolled plate are readily and firmly bound together.

In the last example, the oxy-acetylene welding process was used to secure the two pieces together. The process is also used, as has already been noted, to close the joint. Another example of the employment of welding in steel car construction as a finishing procedure is in connection with the grab handles. These consist each of three parts, a steel tube and two fittings. The fitting when in position has a vertical projection which is enveloped by the tube end. A counter-sunk pin is employed to hold the two firmly together. The welding process is used to efface the joint where the end of the tube contacts with the shoulder on the fitting. The labor cost of setting and welding these fittings is 1½ cents each, 3 cents for each grab handle.

An interesting piece of work is now being performed in making a kind of support used on certain coaches. In these cars, the roof sheets and the steel head lining are about 1⅞ inches distant, along the axis of the roof. There are ten chandeliers per car, so that the double covering of the car made of thin material would have to be strengthened at ten points. This is accomplished by inserting a box-like support in two sections in the space between head linings and roof at each position. Each of the twenty pieces is a rather complicated sheet metal form. The upper and lower bases are shaped somewhat like the letter C in Gothic type, only they are not precisely duplicates. These are connected by a strip connecting the convex sides of the C's. Formerly this entire place was formed by pressing. There were, however, a large percentage of failures through radial cracks at the bends of the C's. Moreover, it required six operations on the press. At the present time, these pieces are formed each from three pieces of 3/32-in. sheeting through the oxy-acetylene process. The superintendent having charge of this work estimates that a saving of 50 per cent has been accomplished by the change in method.

In certain steel cars, there is a recess or alcove for the water cooler used for drinking purposes. At the bottom of such an alcove, a somewhat complicated depression is made for the reception of the drinking glass. It seems to be practically impossible to form this bottom together with the depression out of one piece by the use of the press. However, the press is quite competent to form the depressed piece apart from the bottom of the alcove. The oxy-acetylene welding process comes in here and permits the pressed piece and the bottom to be united into a single piece. It may be added that the bottom is also welded to the vertical part of the alcove.

There are a number of such opportunities in steel car construction for the union of plate metal part to plate metal part to form an angle. Thus on certain steel cars under construction, the emergency tool case, a box-like form, is constructed by welding. The ends and the connecting plate both are provided with flanges, and then are welded together. The welds are, however, not lap welds. The dust plates on the bolster of the motor truck of cars intended for use on an electrical section of a great railroad system are constructed with the aid of oxy-acetylene welding. These dust plates are quite complicated and are perhaps 2 ft. long and 1½ ft. wide. They are made of galvanized iron, No. 12 sheeting.

Perhaps the most interesting piece of work being performed in steel car construction is the welding together of sheets to form units of head lining. The units required are about 7 ft. square. The requirements of the highest class of steel passenger coach construction call for the use of patent level stock. Apparently this is the only steel sheeting that is absolutely flat. But patent level stock is not obtainable of sufficient width. By the use of the oxy-acetylene welding process two strips are so united, edge to edge, that a piece of the desired width is produced without destroying the required flatness. The stock used is quite thin (about 1/16 in. thick) and no reinforcing strip is employed. It is a butt weld. In carrying out this operation, the two half-sheets are secured edge to edge on a suitable table by heavy bars properly clamped. The edges of the sheets are not prepared, but they are placed in contact on one side and perhaps ¾ in. apart on the other. The operator begins on the side where there is contact, using a No. 4 tip and 1/16 in. wire. At first, the separation of the edges opposite tends to increase. But as the work advances, they press towards each other. Two or three times during the operation the clamps on the open side are loosened and the edges permited to approach a little. As the operator works across the 82-in. seam, a buckle follows him. But this disappears as he finishes the weld. The ends of the lengths which have been joined may now not form a line that is quite straight. This is readily corrected, however, by trimming. The surface of the weld will not be smooth, and this is remedied by filing. The expense for the labor, including the filing, is 4 cents per lineal foot. The gas expense may be taken at 1½ cents, so that the weld costs, altogether, about 38.5 cents.

Such torches and generators of oxygen and acetylene as are being used in the operations referred to in the foregoing account are manufactured by the Davis-Bournonville Co., 90 West street, New York City.

LOCOMOTIVE BLOWS AND POUNDS.

By E. Norton, Road Foreman of Engines, A., T. & S. F. Ry.

These instructions will be on blows and pounds; and I wish to impress upon the minds of all that it is necessary for the engineer to understand the cause of blows and pounds and know how to locate them, to the end that he may be able to make a proper work report.

The engineer, to a locomotive, is like a doctor to a sick patient. It is for him to locate the trouble and the cause of it and to prescribe the remedy. It may be necessary for him to visit the roundhouse in some cases, to see the different parts of the engine while they are down, in order to do this. In some cases it may be necessary to locate from symptoms the trouble and the cause for it. In such cases it will require considerable thought and study.

In the matter of blows in valves or cylinders, these are located by sound, also by standing tests. The first I will speak of is a valve blow on a simple engine with a slide valve. This can be noticed by a steady blowing noise at the stack when the engine is working steam.

This test is made by putting the engine on either the top or the bottom quarter and plumbing the rocker arm, which will put the valve centerly on the seat. Then give the engine steam, and, if steam shows at both cylinder cocks in any quantity, it indicates that the valve seat is blowing. If the strips on a balanced slide valve are in bad condition they will cause a steady blow at the stack when the engine is working steam, but the steam will not show at the cylinder cocks when the valve is tested centrally on the seat; but steam will show at the exhaust channel cock. If the engine has no exhaust channel cocks, the strips can be tested by putting the reverse lever in full stroke, giving the engine steam and then opening the cylinder cock on the opposite end of the cylinder from where the steam is admitted. If the strips are blowing there will be a blow at the stack sufficient to form a vacuum in the exhaust end of the cylinder. When the cylinder cock is opened the air will be drawn in to relieve this vacuum. This will show that the strips are blowing on that side. If the cylinder packing is in bad condition steam will blow past the packing into the exhaust

end of the cylinder and thus destroy the vacuum, so that this test cannot be made.

When the cylinder packing blows, the blow at the stack will be strongest at the beginning of each stroke of the piston on the side where the packing is defective; and the steam will show at both cylinder cocks when the steam is admitted to one end of the cylinder. This test is made when the engine is standing on either the top or the bottom quarter, with the reverse lever in full throw forward or back gear. It is advisable to test in both forward and back motion for cylinder packing, as a loose follower plate or a loose piston head will show a blow in both ends of the cylinder when the steam is admitted in the back end of the cylinder, but not when the steam is admitted in the forward end of the cylinder.

When testing a piston valve remember that only the admission rings are tested when the valve is centrally located on the seat, as the exhaust rings are then standing over the ports. If one of the admission rings is broken steam will show in one cylinder cock when the rocker arm is plumb. If both admission rings are broken, steam will show at both cylinder cocks. A broken exhaust ring in a piston valve will cause a blow at the stack, while admitting steam in one direction only. Note which side is taking steam when the blow occurs and you can locate the defective ring.

With compound engines, remember that any defect in the high-pressure part of the engine will not cause any blow at the stack, but there will be a heavy exhaust from the side where the defect is. In testing the high-pressure valve of a compound engine use the same rule is for any piston valve. Have the by-pass valve closed. In testing high-pressure cylinder packing use the same rules as for a simple engine. To test the low-pressure cylinder packing of compound engines have the by-pass valve open. Defective low-pressure cylinder packing will cause a blow at the stack, the same as a simple engine. Test the same as for a simple engine.

A defect in the low-pressure valve of a compound engine will cause a blow at the stack, the same as cylinder packing, excepting that the blow will occur in one stroke only. Note which side is taking steam when the blow occurs and you can locate this trouble. To make a standing test for this trouble have the engine set on the top or bottom quarter on the side that you wish to test. Have the by-pass open. Give steam in both forward and back motion, full gear. If there is a blow at the stack in either motion, that valve is defective. But first be sure that the cylinder packing is all right by noting that steam comes only from the cylinder cock at the end where the steam is admitted.

In testing high-pressure cylinder packing on a compound engine be sure that the by-pass valve is closed. Note the mark on the valves to be sure that these valves have not been coupled up wrong. A defective exhaust ring in a high-pressure valve will show the same under test as a defective high-pressure cylinder packing. The only way to decide which is defective is first to examine the valve and, if found to be in good order, to examine the high-pressure cylinder packing. A loose valve bushing will show the same as defective valve rings and can only be located by examination.

In locating pounds by sound be governed by the following:

If you have a sharp knock at the forward and back end of the stroke on one side, it indicates that the brasses in the front end of the main rod are too large for the crosshead pin or the crosshead pin may be loose. This can be determined easily by throwing the crosshead forward and back with a bar, or reversing the engine under steam with the engine standing on quarter.

When there is a sharp knock at one end of the stroke only, it is either a piston head loose or the piston loose in the crosshead. Either of these defects may cause a sharp knock in both forward and back strokes. They can be located by giving the engine steam and reversing from forward to back motion, with the engine standing on quarter.

When the piston head is loose on the piston the pound will be sharpest when the steam is admitted in the back end of the cylinder. When the back end of a main rod is pounding the pounds will not be so sharp as either of the pounds just mentionerd and will be hardest in one direction. This trouble can be located easily. Side rod brasses and knuckle pin pounds are not so sharp as with main rods, and they can be easily found by putting the engine on a dead center and lifting the rod with a bar.

Driving box pounds are more of a thump and can be felt by the jar on the engine as well as by the sound. To locate them note which side is taking steam when the pound occurs. They can also be found by placing the engine on the top quarter and giving steam, then reversing the engine from forward to back motion and watching the boxes on that side.

A flat spot on a driving wheel will cause a pound or a jar on the engine similar to a bad driving box, but this will be more noticeable when the engine is drifting. This can also be noticed by watching the center of the driving wheel hub jump at each revolution.

Loose follower bolts of a main rod which is too long will cause a heavy pound while the engine is passing over forward centers. This will be more noticeable when the engine is drifting than when working steam. If it should be a loose follower bolt it will get worse very fast and will cause trouble if allowed to go too long. This trouble should be attended to at once.

If the main rod is too long, this can be handled by working a little steam until the engine slows down. This can be helped also by loosening the main rod key in the back end of the rod, providing the key is forward of the pin.

A cylinder saddle loose in its frame will cause a bad pound and should have prompt attention. This can be located easily by watching the engine from the pilot while working steam.

A broken frame will cause a bad pound and can be located easily by putting steam in the front end of the cylinder and opening up the break.

All pounds as well as all blows should be located properly by the engineer, so a proper report can be made or so he can apply a remedy himself. Never report brasses to be reduced until you know that they are keyed up solid and still are too large for the pin. Never trust to anyone to key up the rod brasses; key them up yourself. Never key so tightly that the rod cannot be moved laterally on the pin with the hand or a wrench.

Key tightly the back end of the main rod brasses when the engine is standing on the exhaust point, which is the back bottom or top forward. Always key the side rods with the engine on dead center. You can key the front end of a main rod in any position, but be careful not to key too tightly.

To set up wedges put the engine just above back center. If the wedges are back of the boxes, then give the engine a little steam in forward motion. Do not move the engine. This will pull the weight of the boxes against the shoe and the wedge will be loose. The side rod should be free; if not it shows the rod is too long or too short. If it is a solid rod the driving boxes will have to be lined to suit the rod. If the side rod has keys the keys may be adjusted to suit.

In conclusion I will say that in order to have a good engine it is necessary to know what is wrong and to always strike the loose key. I often have noticed that a good engineer seldom has a poor engine.—Santa Fe Employes' Magazine.

COAL STORAGE PITS, ILLINOIS TRACTION SYSTEM.

The storage of coal from the Illinois mines in pits which allow of its being kept under water has been proved practical. A minimum deterioration, due to air slacking, is thereby gained. The Illinois Traction System has recently completed two pits for the storage of coal for its power plants. This company owns three coal mines and requires about 1,500 tons of coal a day for its several plants. The two most important generating stations so far as the interurban lines are concerned, are those at Peoria and at Riverton, a few miles east of Springfield. The two new coal storage pits are designed to provide under-water coal storage for these plants. The storage pit at Riverton is close to the plant, while the other pit is 16 miles east of Peoria, at Mackinaw Junction, and 20 miles west of Bloomington, where the local railway and light plant also is operated by the Illinois Traction Company. This location is easily accessible from Springfield and the pit probably will be filled with coal from the Springfield district.

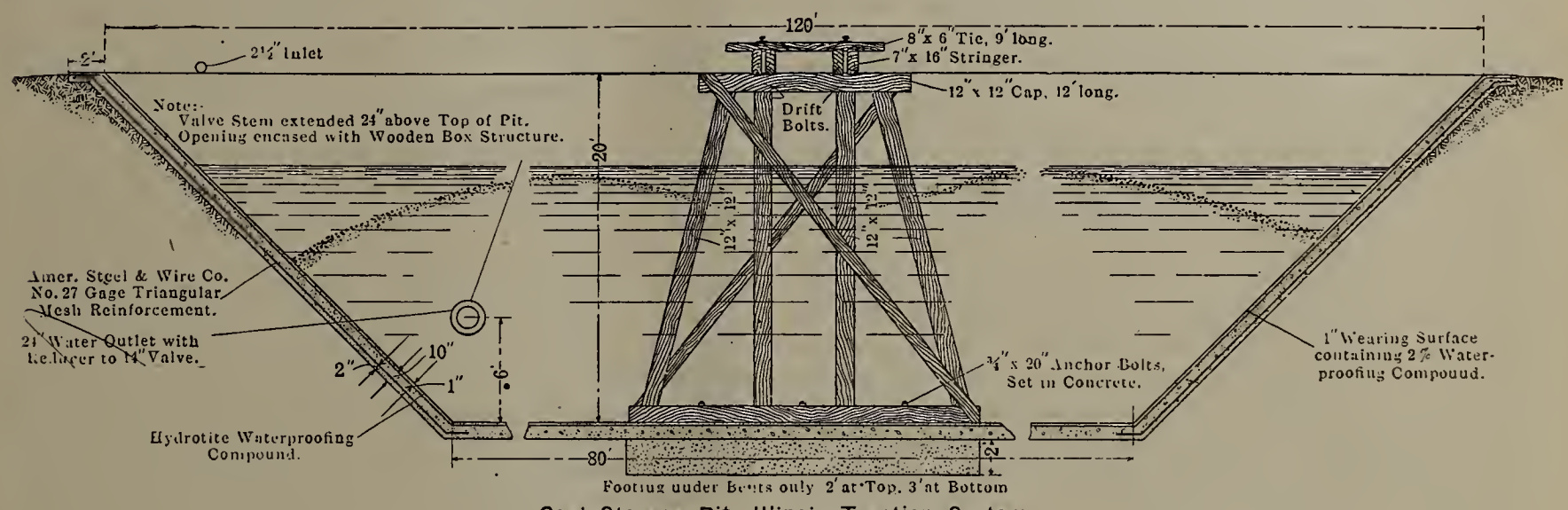

Coal Storage Pit, Illinois Traction System.

The Riverton pit is 225 ft. long by 120 ft. wide and is an excavation below the general ground level. All four sides slope at an angle of 45 deg. to a depth of 20 ft. A framed trestle extending over the center of the pit will support the hopper-bottom cars in which coal will be received and also will carry the company's long-boom locomotive crane which will operate the grab cucket to be used in reloading fuel.

In constructing the pit the sides and bottom are paved with a 10-in. concrete slab, 9 ins. being a 1:3:5 mixture of concrete with style 27 American Steel & Wire Company reinforcement placed about 2 ins. from the bottom to prevent cracks and sliding from expansion settling and contraction. The entire inside surface was coated with a 1-in. wearing surface of a 1:2 mixture of sand and cement, containing Hydratite water-proofing in the proportion of 1 part to 50 parts of the cement, mixed comparatively dry and laid in alternate sections, 6 ft. in width, running from the top to the bottom of the pit. The men worked from a temporary step scaffolding and tamped the concrete in place, which was dumped to them from the top of the slopes. The reinforcement was laid on the ground first and then as the concrete pavement approached the top the workmen from time to time raised it to its proper position in the slab. The wearing surface was applied in the same manner at the slab, only it was allowed to lap the joints made in the concrete slab proper.

The slopes of the pits were made 1 to 1 to allow the coal to slide freely to the bottom. The bottom of the pit was reinforced under the frame bents to offer good foundations. A typical bent, as shown, was used throughout with anchor bolts set in the floor to prevent any side motion which might be caused by vibration. A 16-ft. reach was used with double 7x16-in. stringers. Ties were spaced with 24-in. centers, the idea being to use only sufficient chords to carry the maximum load and thus leave ample space between the ties to allow drop-bottom dump cars to be handled. This trestle runs through the center of the pit and the width of the pit was governed by the length of the boom or extreme reach of a locomotive crane. The track over the pit is a stub siding with an Ellis bumper at the extreme end and the ties are extended over the 9-ft. length to allow for a 2-ft. walkway so that workmen may have free access to the sides of the cars.

The water supply is from a 3-in. main which discharges waste water from the condensers at the power house. The outlet was installed about 6 ft. above the bottom of the pit, the idea being that when the water was as low as this the crane man would have no trouble in picking up the rest of the coal in the bottom of the pit. Also it was necessary to retain a certain amount of water at all times owing to the pit's proximity to the river and the relative average water elevation in the river. The subgrade in the bottom of the pit is ordinary river sand and considerable pressure was anticipated during high water in the river, when the slab might heave and break. When 6 ft. of water is maintained in the pit the river pressure is counteracted.

The outlet was made 24 ins. in diameter to reduce the scouring effect of the overflow. The outlet valve was inclosed in a vertical 4-ft. square wood box made of 2-in. yellow pine, allowing about ¼-in. space between the boards. This box will act as a screen to keep fine coal from being discharged from the pit when the water flows out. The valve stem is run to a point above the top of the pit where a hand wheel and walkway are provided from the edge of the pit to the valve box.

The coal storage pits were built under the supervision of E. M. Haas, of the Illinois Traction System. The drawing herewith is reproduced from the Electric Railway Journal.

Nine Thousand Tons of Coal Burning at Lynn Jct., Utah, S. P., L. A. & S. L. Ry. (This damage is not possible in water storage pits.)

THE COAL PROBLEM.*

By A. Bement.

Attention is directed to the matter of definition of words and terms, as there is no agreement in the use of them, neither is there a sufficient accepted vocabulary to enable one to give clear and definite expression to his meanings. This leads to various people using the same word or term in a variety of ways and for the purpose of indicating things of different character. Therefore, in the following, attention is directed to certain terms which have special significance.

Coal: There is no definite agreement as to what is implied by the use of this word, whether is refers to the coal itself or to the fuel mixture. According to the best defined meaning, coal is a solid fuel and it is something which enters combustion and produces heat. Thereore, none of its components can be ash or moisture, because neither of these take part in the combustion process nor do they develop heat. It therefore follows that coal is that part of the fuel minus ash and moisture, sometimes known as ash- and moisture-free coal, for which the term pure coal has been devised. It is, of course, true that only carbon, hydrogen and sulphur take part in the combustion process developing heat, so it might appear that water of combination and nitrogen are not constituents of coal. But there should be no conception of coal, strictly speaking, other than in its chemical aggregate, thus nitrogen and water combination cannot be considered independent from the coal without implying a destruction of its chemical aggregate. The view that coal fuel is composed of a aggregate of coal, ash and moisture is a definite one; having undisputed application in practice, for it is known that the moisture is immediately evaporated from the mixture because this fact is observed in the laboratory. It is also a fact that the ash is found on the fire grate or in the ashpit after the coal has been burned. Therefore, it is desirable to consider that coal, according to a strict definition, is that portion of the fuel which is neither moisture nor ash. Thus, it is well, in making use of the word coal to avoid misapplication. In certain instances it must necessarily be used to a great extent as a general term, but when a specific statement is involved it is desirable to adopt a more exact definition.

Pure Coal: This is a convenient term which has been quite extensively used to denote that portion of the fuel mixture which is coal, as discussed above. It means the same thing as ash- and moisture-free, but is a more convenient expression.

Fuel Mixture: By this is meant the aggregation of coal, ash and moisture. The acceptance of such a definition is desirable because it tends to avoid confusion and misunderstanding. For illustration, assume that two different lots of fuel are derived from a single coal seam, from the same coal mine, if you will. One is carefully prepared, low in ash; it may be referred to as good coal. Another lot, high in ash and dirty, will be referred to as bad coal, when, as a matter of fact, the coal in each case is absolutely the same. The trouble is entirely apart from the coal and one which concerns the fuel mixture. Yet, the impression conveyed is that the coal itself is of poor quality, not realizing that the trouble is with the larger amount of ash which makes an unsatisfactory fuel mixture.

Clean Coal: Properly prepared lump coal, for example, consisting of fuel in which there is no visible ash, or, in other words, consisting of clean, black pieces, accompanied by no slate or other dirt, is very often referred to as pure coal, the inference being that there are no visible impurities with it. This, however, is not a good definition, because ash, although not visible, is one of the components of the lumps. Therefore, the coal is not pure. It contains ash combined in the structure, notwithstanding the fact that it may not be accompanied by pieces of rock or slate. Thus, the expression, clean coal, is a more definite and exact one.

Dirty Coal: An expression often used to denote a fuel mixture containing a large amount of fine fuel, as "slack" or "duff." But it is not accurate because these very small pieces of coal are coal to just the same extent as the larger pieces. This term should only be used as applying to a fuel mixture containing foreign matter, such as rock, slate, fire clay, etc.

Size: Is, with some fuel, a feature which requires more recognition than it receives, because the size of the pieces have an important influence on the value of fuel coal, as will later appear.

Kind of Coal: This expression is often used with no definite application. The following examples will servie to suggest appropriate application: Anthracite, semi-anthracite, bituminous, semi-bituminous, subbituminous, lignite, coking coal, gas coal, blacksmith's coal, gas-producer coal, pure coal, unit coal, dry coal and moist coal.

Grade of Coal: Thus, it appears from the foregoing that anthracite or bituminous, for example, are not grades, but kinds. The application of the term grade is shown by the following examples: Mine-run, lump, egg, range, nut, buckwheat, raw screenings, slack, washed coal, washed screenings, washed slack and washed nut.

Interpretation of the Analysis.

This is a feature of the coal problem in which there is confusion, not only of understanding but of expression. In the usual laboratory treatment, coal is considered as an unknown substance to be analyzed, and the results reported in the terms of the entire weight of the sample, in other words, in terms of the moist-fuel mixture. Thus, for example, a chemist may report the percentage of volatile matter as being less in one sample than in another, the inference being that the two samples, as far as the coal itself (the pure coal), is concerned, differ, when in fact the coal in each sample may be identical, the difference on the moist-coal basis being due to a greater or less percentage of ash or moisture in the fuel mixture. Thus for the the quantitative analysis of the constituents of the pure coal, or, in other words, the real coal, to be comparable one with another, they should be stated on a pure-coal basis, This reasoning applies to the ash constituent of the fuel mixture, because, if expressed on a moist-fuel basis, it will appear as a variable depending on the amount of moisture present. For this reason the amount of the dry, not the moist ash, is the significant quantity. Thus it is necessary to consider the object required. It is true, of course, that the proper measure of heating value of coal, as bought and sold in commerce, is expressed on a moist-coal basis, because it is the moist-coal fuel mixture that is bought and sold. No mine produces dry or pure coal. Ash and dirt, as well as moisture, always accompany it, but if it is desirable to know whether the ash content of one fuel mixture is greater or less than another, the values must be reduced to a dry-coal basis, and if desirable to make camparison between the coal of two or more fuel mixtures, heat value must be given in terms of the pure coal.

In the application of the analytical data to the use of fuel in connection with its combustion, in fires under boilers, for example, it is an assistance to consider the matter from its actual relation to the process.

In applying analytical data to problems in practice, it is desirable to simplify the matter as much as possible. Thus in the foregoing, it appears that the entire hydrogen content is not treated as combustible, yet it is so given in the results of practically all ultimate analyses which have been reported up to the present time. But, according to our conception of the matter, oxygen must necessarily be chemically combined with some other element, and the assumption that this combination is with hydrogen is the most reasonable one. There-

*From an article written for "Power."

fore, all of the oxygen of the coal is combined with hydrogen, so it must enter the combustion process as H_2O and leaves it in the same condition. For this reason, in calculating a heat balance, it is not only undesirable to consider this water as separate elements of hydrogen and oxygen, but doing so leads to confusion if the standard code for steam-boiler trials of the American Society of Mechanical Engineers is followed, because in it air supply is figured for the total hydrogen instead of only that portion available for combustion. Thus, we have two different conditions of water in the fuel mixture, one in the coal itself, which is liberated by the combustion process, and the other in a free condition, which is dispelled as soon as the coal is heated and before combustion begins.

Consideration of the Size.

To the present time fuel coal has been valued entirely upon the basis of its chemical analysis and price. It has, however, been observed that there are two other very significant features which may have even greater influence than that of chemical composition. One of these is size of the pieces, the other the ash content. For example, assuming that best coal fuel has a heat value of 15,000 B.t.u. and the poorest 9,000, the ratios are as one is to 1.66. It has been found, however, that in practical conditions of operation, coal may be of so small size as to give a zero result in use, in other words, to have no value whatever, or again, of such large size that the practical value of the fuel is largely reduced, yet the results of analysis might be the same in each instance.

Variation in thickness of fire with mechanical stokers is a matter which in itself has an important influence, and values such as those shown by the curve would be more or less modified by adjustment of the fire-bed thickness, or, should hand firing prevail, the result may be influenced through a wide range, by skilful hand manipulation. Thus, fine dust, which would not make a useful fire with a stoker, could be placed in a hand-operated fire, either by sprinkling it lightly over the surface or by allowing it to become coked and then broken up. The tests from which the curve is plotted were all made with one thickness of fire, and uniformity of conditions, except that of the fuel itself. Thus the foregoing shows that the feature of size is of greatest significance as affecting value, especially so, if auxiliary influences, such as hand manipulation, are not employed.

Consideration of the Ash.

According to the conception that coal fuel is composed of an aggregate of coal proper (pure coal), ash and moisture, it is found that the coal may differ in quality, due to a greater or less amount of water of combination, sulphur or nitrogen. These influence its heat value and in slight measure the loss of heat in the chimney gases, but do not affect or interfere with the combustion process. Neither does the presence of the moisture affect combustion except to cause a lower initial temperature and to increase loss in the escaping gases. Thus the water of combination and the moisture pass free to the chimney and in no way obstruct action of the fire. With the ash, however, the case is quite different, as it remains as a solid residue, which does obstruct combustion to a very serious extent.

A definite and clear conception of the ash with its relation to the fuel mixture is useful. To this end the following table gives ash content in three groups:

Ash Groups in Coal Fuel.

1. Ash in the coal itself.
2. Ash in the coal seam distinct from that in the clean coal.
3. Ash associated with the fuel which becomes mixed with it during mining, but not derived from the seam.

Referring to the first group, it is known that when a lump of clean black coal, having no visible evidence of ash associated with it, is burned, a residue always remains. This is the ash in the clean coal. In all coal seams distinct strata of rock, slate, pyrites, etc., prevail to a greater or less extent, as well as impurities, in other than stratified form. These impurities of the seam are distinct from the impurities actually associated with the coal itself. In addition to the impurities of the second dicision, there are others which emanate from a source entirely outside of and distinct from the seam, such as from the roof and floor of the mine, in the form of fire clay, rock, etc., the matter being further illustrated by the equations of the following table:

Detail Grouping of Ash Content.

Group.
No. 1.=Ash in clean coal.
No. 2.=Ash of group No. 1+the distinct impurities derived from the seam.
No. 3.=Ash of group No. 2+dirt and rock.

It will be observed in the foregoing that ash is considered as being only the residue remaining after combustion. It is a fact that certain ingredients of the ash mixture, such as fire clay, for example, contain volatile components, as water of combination. Thus, the true ash is the residual quantity, plus the volatile amount. This is true as far as it affects the displacement of pure coal in the fuel mixture. It, however, has no application in practice because it is the residue only which interferes with and affects the combustion process.

Relation of the Producer and Coal Users to the Problem.

Within recent years it has become customary to purchase coal under specification, with an agreement as to quality, with bonus or penalty in case the fuel delivered is superior or inferior to the requirements. Many difficulties, however, have been encountered owing to the complications involved. Probably the matter may be illustrated by quoting what somebody is supposed to have said, "that it is not so bad to be ignorant, as it is to know so many things which are not true." This very aptly illustrates the position of the coal consumer. On the other hand there exists an equal lack of positive knowledge on the part of the coal producer and dealer. The relation of producer and consumer to the problem will be better understood when the manner is explained by which the producer may fail to furnish proper fuel. When the matter has been analyzed, it appears that the features over which the producer has control as affecting the quality of the fuel, are as follows:

Features Over Which Coal Producer Has Control.

1. Locality and seam from which the fuel is taken.
2. Size of the pieces of the fuel.
3. Amount of the ash content.

It may appear strange that the producers' power is so limited when many specifications give much prominence to volatile matter, sulphur, fixed carbon, heat value, etc. But when the matter is duly considered, the facts become apparent; for example, it is now well known that a particular coal seam or definite locality in a seam is of a constant and uniform quality, as far as the coal itself is concerned. Therefore, this being true, it follows that fixed carbon, volatile matter, sulphur or other components are constants and need only be determined once. It also follows that the composition would be the same from any mine. Thus, if the coal is taken from the proper locality or seam, the requirements are automatically satisfied.

The size of the pieces in which the fuel is produced is a matter of great importance in certain coal districts. In others where only mine-run coal, owing to its friable nature, is produced, the consideration of size is entirely eliminated, as all of the fuel as hoisted out of the mine is loaded directly into railway cars. With the fuel, however, which is graded into various sizes, a more or less elaborate screening

process is employed. Thus the producer has control over the sizes furnished.

The amount of ash content in the fuel is dependent largely upon the care exercised in mining, which consists in removing dirt and pieces of rock from the fuel mixture and in provision to prevent dirt becoming mixed with the coal. This is one of the important features of the preparation of fuel.

Other features which are often considered by coal consumers as something over which the producer has control, but over which he really is unable to exercise any influence, are as follows:

(To be continued.)

A SNEAK ADVERTISER.

The following, which is taken from the *Lumber Review*, seems applicable to other fields as well as that of the lumber trade. It might be stated, however, that the write-ups referred to are sometimes of real news value to subscribers, in which case it would be an injustice to the readers to turn it down for business reasons. It is therefore difficult to draw a line of rigid definition. Reading notices in the *Railway Master Mechanic* cannot be purchased, but will be published free if of real news value in the opinion of the editors:

The advertising schools throughout the country are turning out some very bright advertising men. These men usually get positions under some other advertising man in some large department store or manufacturing establishment, and are polished up until they become shrewd and wise in their profession. They secure positions with some of the large houses that believe in advertising, and make money for their employer through this department.

Many of them, however, are not satisfied with a legitimate way of getting their employer's business from the public, but use means that they ought to be ashamed of. For instance, we just received a letter from one of the largest concerns in the United States who are interested in putting out something to assist the office force in the complete business system. With this letter the advertising man attaches a write-up and sends us under separate cover an electrotype. He says, "We would like to have this inserted in your publication as a free reading notice and we are enclosing a copy of the folder for your approval which, after reading, we know you will appreciate as a valuable book for all lumbermen." Then he adds: "Kindly let us have two copies of the edition which contains this reading notice."

We wrote this advertising man as follows:

"Dear Sir:—We have your letter of February 20. Also the little article that you request us to print and the cut that goes with it.

"We appreciate the fact that as an advertising man employed on salary, you must do the best you can for your employer and we presume that in sending out this cut and this nice little write-up, you will catch some suckers.

"Our paper goes to a good many thousand subscribers throughout the United States. We have a splendid circulation among the mills on the Pacific coast, also in the South and among the retail lumber dealers throughout the country. All the money we get to run our paper comes from our advertising, as it costs us as much for keeping up our subscription list and printing our paper as we get from our subscribers, and if it will do your people any good to come into our paper they are certainly well able to pay for it.

"We shall be glad to either give them written notice or display ad at our regular rates. Yours very truly,

"THE LUMBER REVIEW.

This is what we call sneak advertising. This advertising man appreciates the fact that all reading notices which he can get in a trade paper, especially an illustrated reading notice in a trade paper that has a large circulation, he is going to get something that he can go to his employer and say, "See what I have done for you. I have secured a reading notice in this paper that would have cost you a good many dollars if you had gone after it in the regular way." He knows these trade papers are good publications for his advertising, but is too contemptible to go at the matter in a legitimate manner and pay for what he gets. In order to get a few notices, and he will get a few from some who do not realize the enormity of this man's crime against trade papers, he will have to spend as much money in electrotypes, preparation of readings notices and postage as it would cost to pay one good legitimate trade paper in each line for either a display ad or a reading notice.

We had a very good customer at one time in the lumber business in Ohio who was advertising with us and had been for two or three years. All at once he cut out his ad. He had hired an advertising manager. This advertising manager wrote us that they had decided to change their method of advertising and were cutting out their ads in the trade papers. About two months after we received this letter we received another from this advertising man with about a column and a half write-up. This second letter told us that they had prepared, after a good deal of thought, an article which would be of great interest to our subscribers and that we could have this article without any cost, and they would be pleased to have an extra copy or two of the paper in which it was printed. We read the article over and it was a very beautiful advertisement from this company who had decided that they had no further use for trade papers.

Trade papers, or the publishers of them, should be friendly to advertising men, but they cannot possibly be friendly with this class of advertising men, who cannot be called anything but sneaks. They might just as well steal money out of our pockets as to steal our business.

Advertising has come to be a great business and every one knows, who is in business today, that it is the man who tells what he has to sell that sells it, but every trade paper in the country should beware of the sneak advertising man and were it not that we do not want to advertise the business of these people in any way, we would print their names every time they send in a proposition of this kind.

At all events, if any of the advertising magazines in the country will take up this matter and can use these names to the advantage of the trade paper and publisher generally, we would be glad to furnish the names of those who come to us with this kind of a sneaky proposition.

A man who makes a business of selling some kind of a patent medicine once told me that he got out electrotypes by the hundred and sent them to the country papers. He said he found it was a paying proposition because they were always short of fillers and put these in to fill up. As trade paper men we should not put ourselves in with the same school of suckers that this man was fishing for.

The Canadian Northern has ordered 50 steel underframe flat cars from the Canadian Car & Foundry Co., and 50 Hart convertible cars from the Hart-Otis Car Co., Montreal.

The Pere Marquette has ordered 12 coaches and 2 combination cars from the Pullman Company.

The Dominion Iron & Steel Co., Sydney, Cape Breton, Canada, has ordered 25 forty-ton wooden flat cars, 25 forty-ton gondola cars for limestone and 60 forty-ton wooden ore cars lined with steel from the Canadian Car & Foundry Co.

New Books

MECHANICS FOR ENGINEERS. By Arthur Morley; 290 pages, cloth, 5x7½; third edition. Published by Longmans, Green & Co., London and New York. Price 7s. 6d.

The principles of kinematics and mechanics form a sound basis for the study of engineering problems, and it is for the student that this book is primarily intended. It is noteworthy that the calculus is not used throughout the book, but a knowledge of algebra, trigonometry and curve plotting is presupposed. The subject matter is treated generally as in other works of a like nature, but has been made as concise as possible and is divided into paragraphs of convenient lengths, each headed by a title in black face type which shows its contents. Also each chapter is followed by a dozen or more engineering problems covering the work in that chapter. For class room use it is intended to cover about a year's work, but it is well worthy of the study of any one who wishes to obtain an understanding of mechanics as applied to engineering, whether he be in the class room or at home.

* * *

MUNICIPAL FRANCHISES, VOL. II. By Delos F. Wilcox; 885 pages, cloth, 6x8. Published by the Engineering News Publishing Co., New York. Price $5.00.

Volume I of this work was published over a year ago, and contained a general introduction to the subject and discussions of typical franchises covering all the various public utilities in the different portions of the United States. Volume II is devoted to municipal transportation franchises and the taxation and control of public utilities. The author, Mr. Wilcox, is chief of the bureau of franchises of the first district public service commission of New York and is well acquainted with his subject. The relations existing between the public and the street railways are gone into very thoroughly, together with the recent developments in franchises, of which the Chicago and Cleveland settlements are pointed to as good examples. Subway, elevated, interurban and terminal franchises are also treated very thoroughly. A chapter on "The Elements of a Model Street Railway Franchise" is of particular interest as citing the views of a man who has made a deep study of this growing question, and in it he says "the principle of monopoly, subject either to public control or to direct ownership, is essential to the public welfare." The public utility question is the most important one before our cities today and this work is an excellent treatise of the whole question, the only criticism being that it is rather lengthy.

THE TEMPERATURE-ENTROPY DIAGRAM. By Charles W. Berry; 393 pages, cloth, 5x7½ inches, third edition. Published by John Wiley & Sons, New York.

This book is solely for the use of students in thermodynamics and is a very complete treatise of that rather misunderstood function of the heat of a body which is called entropy. There are chapters dealing with the application of the temperature-entropy diagram to the gas engine, the steam engine, the air compressor and refrigerating processes, and to the student who is making a thorough study of thermodynamics these will prove of interest. The book is highly theoretical in nature, but is a valuable work on the subject particularly for those who are engaged in instructional work.

Personals

O. H. Attridge has been appointed master mechanic of the Atlanta & West Point R. R.

C. W. Goodyear has been appointed purchasing agent of the Buffalo, Attica & Arcade R. R. at Buffalo, N. Y.

Wm. Queenan has been appointed a car shop foreman of the Burlington at Aurora, Ill.

F. W. Stubbs succeeds John R. Thompson as mechanical engineer on the Chicago Great Western at Oelwein, Ia. Mr. Thompson has been appointed a master mechanic at Clarion, Ia.

G. E. Cessford has been appointed a master mechanic on the Chicago, Milwaukee & Puget Sound, vice A. V. Manchester, resigned.

Geo. Durham has been appointed a master mechanic on the Delaware, Lackawanna & Western R. R., at Scranton, Pa.

F. B. Bowes has been elected vice-president in charge of traffic on the Illinois Central and Yazoo & Mississippi Valley railways. His former title was general traffic manager.

J. S. Carnahan succeeds E. W. Noteware as superintendent of the Mexican Mineral Ry.

The presidency of the Missouri Pacific has been filled by the election of B. F. Bush, of the Western Maryland. Alexander Robertson succeeds Mr. Bush as president of the Western Maryland Ry.

D. M. Knox succeeds W. H. V. Rossing as mechanical engineer of the Missouri Pacific system. Mr. Rossing has been appointed assistant to Vice-President Nixon of the Frisco lines, with jurisdiction over mechanical matters.

G. H. Hopkins succeeds W. O. Fragmeir as master mechanic of the Oregon Electric Ry.

C. R. Gray.

John R. Thompson.

N. Kirby.

C. J. Scudder has been appointed a master mechanic of the Pere Marquette R. R. at Saginaw, Mich., succeeding E. F. Essick. C. K. Woods succeeds Mr. Scudder as shop superintendent.

C. R. Gray has resigned as vice-president of the St. Louis & San Francisco to become president of the Spokane, Portland & Seattle and associated lines.

J. S. Pyeatt, formerly of the Pere Marquette, has been appointed a superintendent of the Frisco lines at Chaffee, Mo.

The office of J. L. White, purchasing agent of the St. Louis, Brownsville & Mexico, has been moved from Kingsville to Houston, Texas.

W. G. Brimson has been elected president of the Texas State R. R., with office at Texas City, Tex.

F. W. Morse has been elected vice-president of the Chicago & Alton and the Toledo, St. Louis & Western. He also retains the title of general manager.

J. B. Shaw succeeds J. W. Lowery as master mechanic of the Tombigbee Valley Ry.

O. L. Dickeson has been elected vice-president of the White Pass & Yukon Route.

E. E. Mullins, mechanical engineer of the Northern Railway Co. (Costa Rica), has been appointed superintendent of motive power, with office at Limon, Costa Rica, succeeding W. H. Sample, resigned.

J. N. Mowery, who has been appointed master mechanic of the Western division of the New York, New Haven & Hartford, with office at Waterbury, Conn., began railway work as a special apprentice on the Chicago, Burlington & Quincy in July, 1899, remaining with that company until May, 1900. He then held various positions until his appointment as mechanical engineer of the Lehigh Valley on February 12, 1906. Mr. Mowery remained in this position until November, 1909, when he was appointed assistant master mechanic of the same company, and was promoted to master mechanic of the Auburn division in June, 1910, which position he held until his recent appointment as master mechanic of the New York, New Haven & Hartford.

N. Kirby, who was recently appointed master mechanic of the Alabama, Tennessee & Northern, entered the Illinois Central Railroad shops at Water Valley, Miss., in 1880, as machinist apprentice, serving part of his time at the old Welden shop of the Illinois Central at the foot of 16th street, Chicago, Ill. He remained with the Illinois Central in different positions from machinist to locomotive fireman, engineer and foreman of shop at Water Valley, Miss., until 1894. He then went to the Mobile & Ohio as locomotive engineer. He was transferred to the Montgomery division in 1898 and was appointed master mechanic of the Montgomery and Mobile divisions. He left the service of the Mobile & Ohio in Mrach, 1902, to accept a position as master mechanic of the A. & M. R. R., and left the service of this road March 1, 1911, to accept a position as master mechanic of the Alabama, Tennessee & Northern R. R.

Among The Manufacturers

LIBBY TURRET LATHE.

A new 18-inch "Libby" turret lathe has been put on the market recently by the International Machine Tool Co., of Indianapolis, Ind., and is shown in the photograph. The drive is either by belt from one or two speed countershaft or by a motor, either 5 or 7½ h. p. of not over 1,800 r. p. m. With one speed countershaft there are 8 spindle speeds and with two speed countershaft 17 speeds.

Feeds are all positive gear feeds. The feeds in each apron are entirely independent each of the other, both as to amount and direction, and are reversible.

The cross feeds on the tool post carriage are one-half the lateral feeds on standard machine, but can be same as lateral feeds if desired, from 1/256 to ⅛ and reversible. Hand feeds are possible on both carriages, one revolution of wheel moving the carriage one inch.

Automatic feed trip-offs are provided for each face of the turret and laterally for each face of the tool post. After these trip-offs have operated, there is an index pointer on a graduated scale on the turret, to indicate the amount of cut taken, a great convenience for the operator in forming work to an accurate depth and thickness.

The traverse for each carriage is entirely independent of the other and can be operated either way, regardless of what the other carriage is doing or whether the feed is on or off. In operating this power rapid traverse none of the headstock gears or feed gears are used, so that neither the pilot wheel on the turret slide nor the hand wheel on the tool pot carriage turn or move in either direction when the rapid traverse is thrown in.

The single belt drive mechanism is separate from the headstock proper. Is fitted into a housing cast solid with the bed and headstock, so that the whole mechanism may be taken out in case of repair or adjustment. This mechanism is composed of two friction gear drives and drivers on to the intermediate shaft, giving two speeds forward, which, together with the four mechanical changes in the headstock, gives eight speeds forward.

There are two double friction clutches in the headstock. One a band friction in the driving mechanism, and one a cone friction on the intermediate shaft. Those in the driving mechanism are on a shaft which never runs less than 240 r. p. m. In both instances the locking mechanism is such that it gives all the effect of a positive clutch, without the disadvantages.

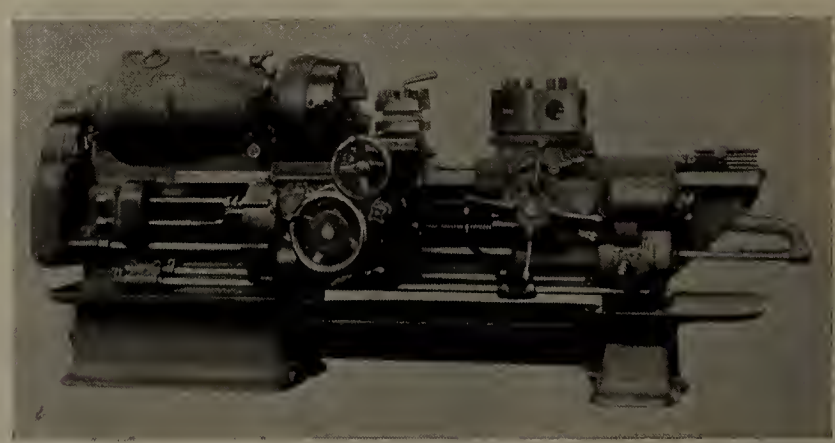

Libby Turret Lathe.

The tool post will carry four tools at one time and each is independently adjustable for height.

The tool post carriage is of the side carriage type, having a bearing on the front way 5⅞x24 inches, with a long taper gib on the inside of the front way. It is further gibbed to a 60-degree angle on the lower side of the bed to take care of the cross strain.

The turret is of the hollow hexagon type, 12 inches in

diameter, with six holes bushed to 3¼ inches. Lock pin and clamp are operated by one lever. This is a patented device.

The oil pans are cast iron and placed at such a height from the floor as to not inconvenience the operator. All pans drain into the large pan in the center of the machine, which contains a strainer. From this the lubricant flows into the front leg of machine, which is a reservoir, from which the oil is pumped back to the work by means of a rotary pump, located on the back of the machine and driven from the rapid traverse shaft. This pump has a pressure valve which, when the flow is shut off at the work, causes the pumped oil to flow direct to the reservoir.

COMMUTATOR SLOTTING TOOLS

In any motor where there is a tendency toward sparking, due to defective design, hard usage or the presence of dirt, the destructive action of the spark causes the burning of the commutator segments at the trailing side. This reduces the level of the copper below that of the mica which, on account of its refractory nature, remains almost unaffected and holds the brushes off of the copper, thus aggravating the trouble. The destructive action, once started, proceeds rapidly, precluding good motor operation.

Slotting out the mica to a depth of 1-32 in. or 1-16 in. below the surface of the copper makes possible proper contact of the brushes on the bars and, in addition, permits the use of soft brushes, leading to longer life of commutator.

The Westinghouse Electric & Mfg. Co., Pittsburg, manufactures two types of slotting tools for this purpose, one type air operated and the other motor operated. Both types are shown in the accompanying illustration. Each of the slotting tools comprises a circular saw, with adjustable rests for centering the tool. Guides bearing on the commutator face are adjustable on the guide bar of the tool, making it applicable to a large range of commutator sizes. The guides also permit the depth of slotting to be accurately adjusted and maintained.

The air-operated slotting tool is operated by an air turbine at a pressure of 40 to 80 pounds per square inch. The air turbine forms part of the tool.

The motor operated slotting tool is satisfactorily operated by a ¼-horsepower motor running at approximately 1,700 revolutions per minute. A 5-ft. flexible shaft is provided for connecting the tool to the motor.

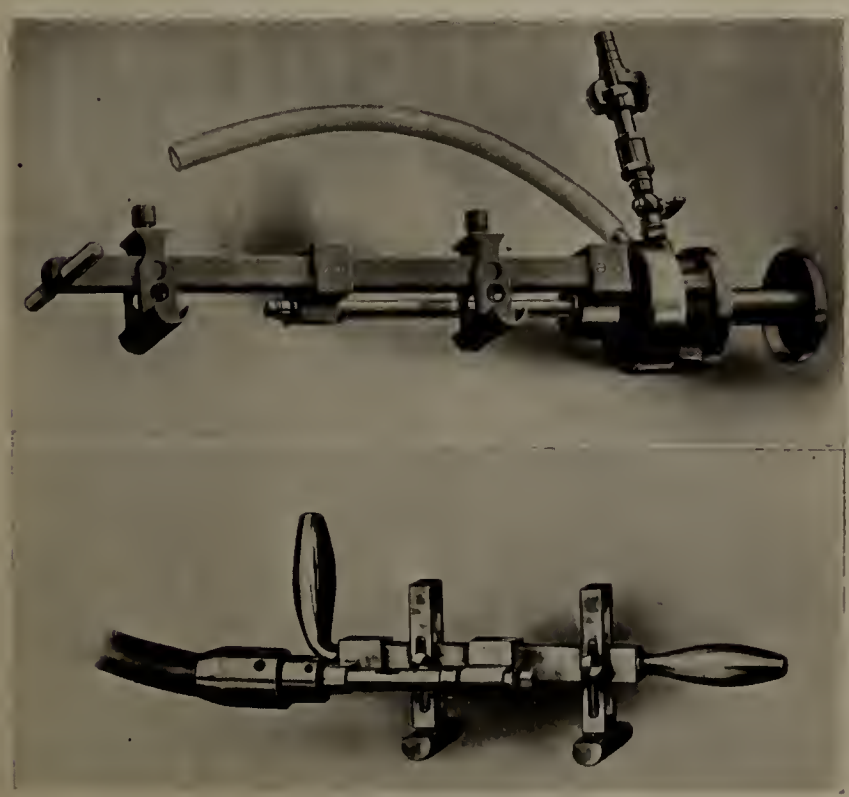

Commutator Slotter.

UNIVERSAL FLEXIBLE PACKING.

The engineer as well as the roundhouse man is familiar with the inconveniences as well as the loss of time incident to the event of packing blowing out of the throttle stuffing box. To overcome these difficulties, together with many others which are evident in locomotive shops, the packing shown in the accompanying illustrations has been put on the market by the Universal Flexible Packing Co., of Pittsburg. It is a combination of fibrous and metallic packing constructed to preserve the good qualities of each. It is

Universal Flexible Packing.

used to advantage in high pressure steam service, in both the air and steam ends of air pumps, throttle stems, high speed rods, hot and cold water pumps, valve stems, and steam hammers.

It will be seen from the accompanying photographic illustration that the packing is made up of three segments which are held together and in contact with the moving part by means of the gland pressure on the fibrous packing which surrounds them. These segments are made of a special high grade anti-friction metal of a composition which prevents the rod from scoring. The interior walls of the segments contain grooves which act as a water packing and assist in the lubrication of the moving part.

The details of construction of this packing are shown in the accompanying line drawing. It involves a metallic sleeve or tube made up of three segments d, Fig. 1, provided with an inner solid flange h, and lugs e, and spaces, which interlock one with the other when brought into the assembled position shown in Fig. 7, and in Fig. 1, set up around the piston rod c. Within the stuffing box a, and interposed between the sleeve and the stuffing box, is a fibrous or soft packing cushion. The gland b is bored out so that it will slip over the metallic part of the packing, or the packing sleeve as it is called, and when tightened up, will press against the soft packings. In this way the soft packing is forced against the flange h, holding it tightly against the bottom of the stuffing box. This pressure also forces the soft packing against the inside walls of the stuffing box and against the outside of the sleeve, which is tapered as shown in the dimension t, in the illustration.

The independently acting segmental construction of the

metallic sleeve insures the required amount of flexibility to obviate any binding or undue frictional contact between the sleeve and piston rod. When the rod is slightly out of alignment, each segment is free to give laterally but prevented from longitudinal movement by reason of the inter-

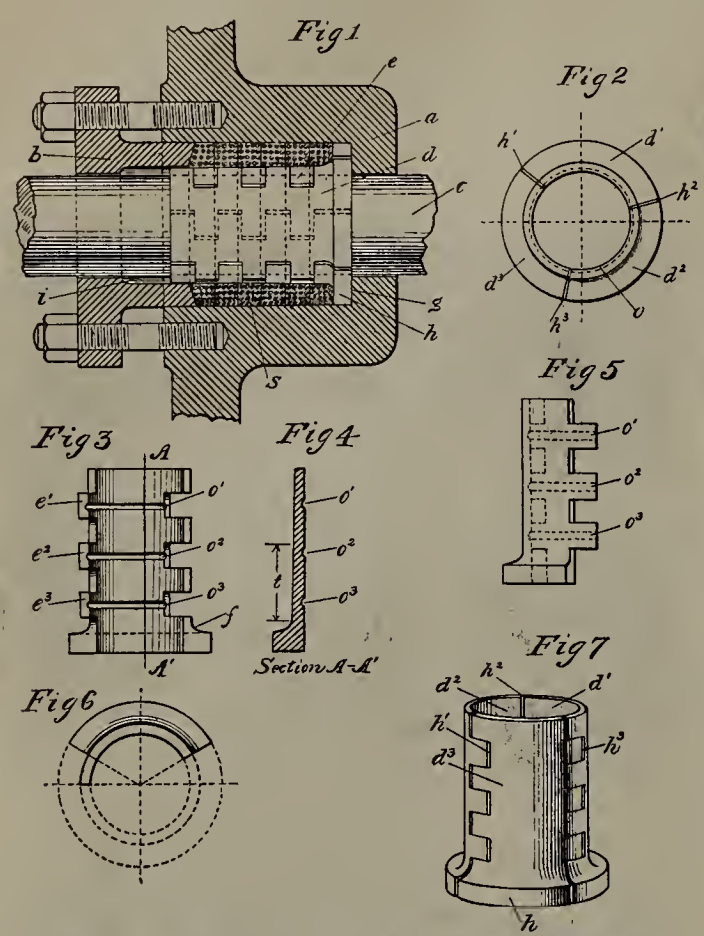

Showing Construction of Universal Packing.

locking lug feature and inner flange, and the compression afforded by the fibrous cushion.

The inner end of each segment, or the end that is in contact with the stuffing box bottom g, is provided with a solid flange h, made to conform to the contour of this part, whether concave or square, and offers adequate resistance to the pressure from the cylinder. The only avenue of escape is then through the spaces h^1, h^2, h^3, when its force will be retarded and gradually reduced by frictional contact with the interlocking series of lugs, e^1, e^2, e^3, until finally its energy will be spent before reaching the outer end of the sleeve.

Any appreciable slackness or wear that might appear in the sleeve or the soft fibrous cushion due to the action of the piston rod can readily be taken up by tightening the gland, and the packing can be kept tight at all times. The outer circumferential face of each segment is tapered longitudinally, as indicated by t, Fig. 4, and this part of the construction affords a wedging feature for the fibrous or soft packing cushion, and insures a positive and continuous compression throughout the entire length of the sleeve.

DOUBLE SPINDLE SHAPER FOR CAR SHOPS.

A new car shop tool has been placed on the market by J. A. Fay & Egan, 145-165 Front St., Cincinnati, Ohio. This tool is a double spindle shaper, designed to meet exacting requirements of car shops and all kinds of woodworking plants where heavy shaping is done. In the company's large illustrated circular treating of this machine, particular attention is called to the extreme high speed of the spindles, insuring perfect work and maximum output.

The phosphor bronze taper bearings with continuous oil flow permit the operation of the spindles on this machine at 7,000 revolutions per minute, which is 50 per cent faster than is usual on heavy car shop shapers. The spindles are made of forged crucible steel and are mounted in very rigid housings which are fitted into planed gibbed ways their entire length. These housings are adjustable vertically by hand wheel (as will be seen in the illustration), operating through cut spiral gears, thus requiring no extra locking device. Each housing is independent of the other. Both spindles drop below the table.

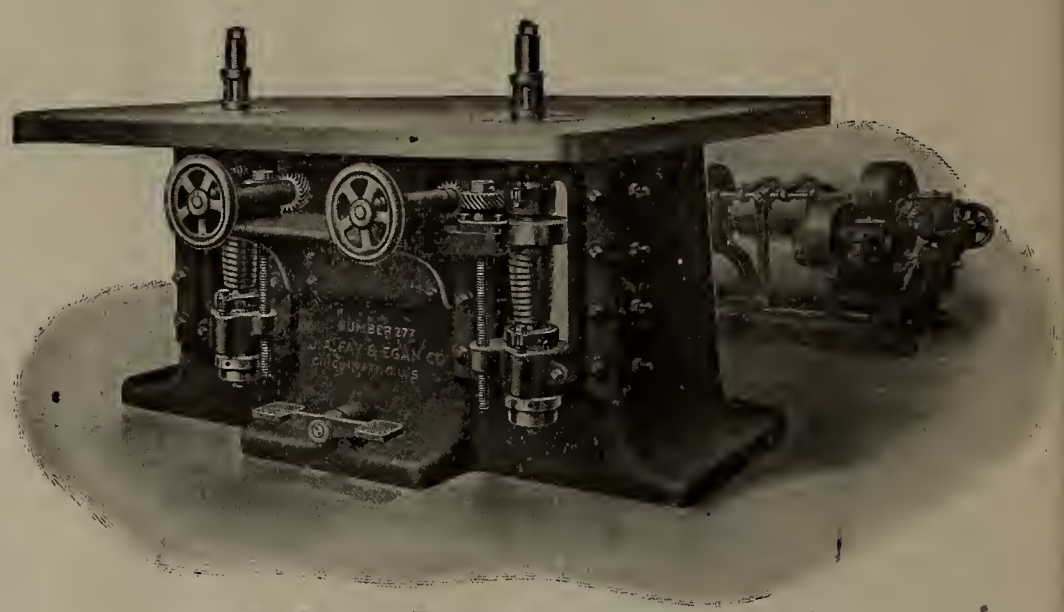

Fay & Egan Extra Heavy Double Spindle Shaper.

Another feature of this machine is the construction of the countershaft, the base of which is cast in one piece, on which all the pulleys and belt shifters are mounted. This is a new feature distinctive of the Fay & Egan machine, and makes the most rigid construction, also eliminating all assembling on arrival at destination. Adjustable independent idlers are provided to take up the slack in either belt, maintaining the proper tension at all times.

The column is a single cored casting, very heavy and with broad floor support. It is of such design that it is not in the operator's way, and it supports the working parts with no vibration. The operator has perfect control of this machine at all times by means of the foot treadle at the front.

SANITARY WIPING RAGS.

The preparation of cotton wiping rags has been developed into a large business by the Sanitary Rag Co., of Kalamazoo, Mich. Soft cotton rags are much to be preferred to waste for shop and locomotive use from an economic view point, as their use is said to cut the cost of material for wiping purposes quite considerably.

Plant of Sanitary Rag Co.

The plant of the Sanitary Rag Co., which is devoted to the preparation of rags for use as wiping cloths, is shown in the accompanying illustration. In this plant all raw material is subjected to washing and sterilizing processes and are then carefully kept from impurities until shipped to the consumer. The rags are sorted and cut to an even size and all small or otherwise undesirable pieces are disposed of to the paper mills of Kalamazoo.

In the final operation, the wipers are transported to the baling departments, where the bales are lined with heavy wrapping paper. Machine balers press approximately 500 pounds into a bale measuring 44x28 inches and 50 inches high. The outside of the bales are covered with good burlap, then securely bound with eight wire ties. This insures a delivery to transportation lines of a clean, pure, dry, asceptic, sanitary wiping rag. The wipers are shipped bone or paper dry. If kept in a dry storage, they will not mould, as the chemicals in the washing fluid are germ and moth destroyers.

The point of economy in the use of rags was raised and subsequently tested by a Toledo machine tool manufacturer, who issued alternately waste and rags to his machinists. After several weeks he is said to have announced a saving of approximately 50 per cent in favor of the rags.

HYDRAULIC RAMS FOR ELEVATING WATER.

The hydraulic ram, as now built by the Rife Engine Co., with its automatic air feeding device, makes these machines available for town water works, railroad tanks and irrigation, as well as the smaller demands for country residences. With two or more feet of fall, water may be elevated 30 feet for each foot of fall used, so that water can be pumped to nearly every country residence and farm from a spring or stream at any distance. When overhead tanks and towers are objectionable, the rams will deliver into pneumatic tanks and automatically supply sufficient air to maintain an air cushion in both ram and pneumatic tank.

Hydraulic Ram on Penn. R. R.

Over forty railroads use these machines to supply their water tanks. As the rams require no fuel or attendants, they are superseding the steam plant with its attendant pump men, particularly at isolated points along the line. The accompanying illustration shows a plant installed for the Pennsylvania Railroad Co. The water used to operate the rams is conveyed through a 6-inch pipe line 1,400 feet to the intermediate reservoir, to which the drive pipes are connected, as shown. The fall is 12 feet, water used 120 gallons per minute, pumping head 39.4 feet, water delivered 28 gallons per minute, efficiency developed 77 per cent.

Battery of Rams Supplying Mexican Ry.

Another illustration shows a "battery" of rams installed for the Mexican Railway, all pumping through the same pipe line 10,000 feet long, supplying water to the railroad shops, water station and town of Apizaco, Mexico.

The next illustration shows three large rams, with a capacity of 700 gallons per minute each, pumping water a distance of 13,000 feet to an elevation of 262 feet, for the Colombian Government in Colombia, South America.

Many small towns and institutions find the cost of pumping water by steam or gasoline prohibitory, absorbing all the income. A case in point: A town which was paying $25 daily for fuel, pump men, repairs, etc., installed rams which pump 600,000 gallons daily at a cost of less than 50 cents daily for operation.

Land lying above ditches and streams is practically valueless without water. Rams pumping into an upper ditch or reservoir render such land of the highest value and make it possible to irrigate one to one hundred acres practically without cost for operation.

Columbian Government Plant.

The Rife Engine Co. also construct a ram that is operated by muddy or impure water as power to deliver water from a spring in which the necessary volume or fall cannot be secured to operate a single-acting ram. They guarantee an efficiency of from 60 to 90 per cent and will furnish drawings and estimates free upon receipt of the data of water supply, fall, elevation and requirements, sent to their office, 111 Broadway, New York City.

New Literature

The Peerless Rubber Mfg. Co., of New York, has issued a leaflet illustrative of gaskets, hose and "Rainbow" packing.

* * *

The Simplex melting furnace for oil or gas fuel is the subject of bulletin 28 of the Rockwell Furnace Co., New York.

* * *

Allis-Chalmers Co., of Milwaukee, has issued bulletins 1079 and 1624, the former being devoted to steam turbines and generators and the latter to centrifugal pumps. The Allis-Chalmers turbines are of the Parsons type and are made high-pressure condensing, high pressure non-condensing, and low pressure condensing. The centrifugal pumps are furnished within a wide range of sizes.

* * *

A very neat booklet has been published by the American Asphaltum & Rubber Co., of Chicago, giving the advantages of asphalt mastic floors over wood and concrete floors. It is well illustrated with half-tone reproductions of these floors in machine shops, brewery and packing rooms.

The series of electrification talks and illustrations which ran in this journal as well as in other technical journals during the first part of this year has been reproduced in booklet form by the Westinghouse Electric & Mfg. Co., of Pittsburg. It contains considerable general information upon the systems of electrification in use in various parts of the world and the up-to-date railroad man will find much of interest in it.

* * *

One of the handsomest and most practical catalogues which we have seen for some time is that recently issued by the Nicholson File Co., of Providence, R. I. It is about 8x10 inches in size, with an embossed cover of flexible dull gray stock. The major portion is filled with remarkably clear half-tone illustrations set in relief and showing all the different types of files and specialties which the company manufactures. From three to ten files are shown on a page, together with the cross-sections of the same. Two or three pages are devoted to the plant and its history, and as the catalogue contains 90 pages, it may be seen that the line of files and kindred tools shown is very comprehensive.

Industrial Notes

Mr. Geo. F. Allerdice, manager of sales for the Republic Iron & Steel Co., at St. Louis, Mo., has been appointed general manager of sales. Mr. Paul W. Cotton has been named to succeed Mr. Allerdice.

Mr. John C. Anderson, of Westinghouse, Church, Kerr & Company, Pittsburg, Pa., has resigned to become mechanical engineer in the sales department of the Pressed Steel Car Company, Pittsburg, Pa., with office in New York, effective May 1

The Kirby Equipment Company, Chicago, has moved its offices and the Chicago office of the Globe Seamless Steel Tube Company, Milwaukee, Wis., from the Railway Exchange to the Peoples' Gas building.

Warren J. Lynch, passenger traffic manager of the New York Central Lines west of Buffalo, has resigned to go with the American Steel Foundries, Chicago, effective May 1. At the meeting of the directors in May, he will be elected fourth vice-president of that company, with office at New York.

The Call Switch & Frog Company, Denver, Colo., a subsidary of the Call Switch Company, has been incorporated with $50,000 capital, fully paid, to make the Call type of switches and track supplies. The plant which the company is building at Denver is now nearing completion.

The Roberts & Schaefer Co., Chicago, has closed a contract with the Queen & Crescent for a 500-ton reinforced concrete and steel main line coaling station to be designed and built at Montlake, Tenn., immediately. This company has also taken a contract recently for a 200-ton frame construction coaling station for the St. Louis & San Francisco at Palos, Ala., and a contract for a 500-ton main line steel and frame construction Holmen coaling station for the Cleveland, Cincinnati, Chicago & St. Louis at Greensburg, Ind.

The Southern Car Company, High Point, N. C., will increase its capital stock from $100,000 to $300,000.

An eastern syndicate represented by Mr. M. Kollman is said to have purchased 800 acres in the Allegheny River valley, about 40 miles from Pittsburg, and will start work soon on a plant for hardening steel by a new process. The plant will include open hearth and annealing furnaces, chemical shop and power plant. The first installation will be for the manufacture of steel car wheels, with a capacity of 150,000 wheels yearly.

The Investment Trust Company, Montreal, Que., has bought a large block of the 6 per cent. bonds of the Canadian Car & Foundry Company, Montreal.

Foreign business secured by the Westinghouse Electric Manufacturing, Company, East Pittsburg, Pa., recently includes orders from the San Juan Traction Co., of Porto Rico, and the Rio de Janerio Tramway, Light & Power Company, Rio de Janerio, S. A., for equipments of No. 306 and 101 G street railway motors.

Several important papers in patents will be presented at the New York meeting of The American Society of Mechanical Engineers, 29 West 39th Street, at 8:15 p. m., on Tuesday, May 9, 1911. The subject will be discussed by E. W. Marshall, D. Howard Haywood, Edwin J. Prindle, all of New York. The purpose of this meeting is to outline to the engineer and manufacturer the fundamental principles of the Patent Law, the position and qualifications of a patent expert and the industrial development for the purpose of establishing a patent monopoly.

The sixth annual convention of the International General Foremen will be held in Chicago, July 25th, 26th and 27th at the Hotel Sherman. The exhibit hall is on the same floor and next door to the convention hall. The fee for representation is $25.00, which entitles to one representative and 5 ft. front exhibit space. Additional space may be secured on application. Surrounding the convention and exhibit halls are several desirable rooms which may be obtained for headquarters and exhibits, upon application to the Hotel Sherman. The space in the exhibit hall will be assigned by the executive committee, in the order applications are received. Inquiries should be addressed to J. C. Younglove, secretary and treasurer 322 N. Michigan Ave., Chicago.

It is stated that the Haskell & Barker Car Co. has acquired five city blocks adjacent to its present factory at Michigan City, Ind., on which it intends to build a steel car plant, costing about $1,250,000. The company now manufactures wooden cars exclusively.

Frank B. Hart, formerly sales manager of the Ohio Steel & Foundry Company, Lima, Ohio, has resigned and organized the firm of Hart, Doane & Hart, Rector building, Chicago, dealers in railway and industrial supplies.

The Power Specialty Company, New York, has received orders from the following companies, among others, for Foster superheaters: Cleveland, Cincinati, Chicago & St. Louis; Milwaukee Electric Railway Company; Winnipeg Electric Company; New York, New Haven & Hartford; El Paso Electric Railway Company. With one exception these contracts are all from previous users of Foster superheaters, and in many cases the contracts represent from the fifth to the fifteenth repeat order.

The National Railway Valve Gear & Equipment Co. has been incorporated and expects to establish a plant at St. Louis for the manufacture of an outside locomotive valve gear.

Jenkins Bros., New York, have moved their general offices from 71 John street, to 80 White street.

Gardiner M. Lane, of Lee, Higginson & Co., New York, brokers, was elected to the board of directors of the United States Steel Corporation on April 17, succeeding the late Nathaniel Thayer.

The United States Electric Company, New York, has received orders from the Canadian Pacific for 255 Gill selectors. The Canadian Pacific makes extensive use of the telephone in train despatching. Gill selectors have also been ordered lately by the Seaboard Air Line for 74 telephone stations and by the Atlantic Coast Line for 88 stations. The Seaboard Air Line has used 52 Gill selectors for about a year; all of them on one line.

Alexander Crawford has been made purchasing agent for the Hyatt Roller Bearing Company, Newark, N. J.

Mr. W. A. Hitchcock, secretary of the Upson Nut Company, Cleveland, Ohio, has been elected president of the company to succeed the late Andrew S. Upson. Mr. F. H. Rose, assistant treasurer of the company, will succeed Mr. Hitchcock as secretary.

The Boss Nut Company, Chicago, announces that arrangements have been made for the United States Steel Corporation to make the Boss nuts at the Joliet, Ill., plant. Special machinery is being installed for that purpose. J. A. McLean, formerly with the American Arch Company, New York, joined the sales department of the Boss Nut Company, April 1, with headquarters in Chicago. The Adreon Manufacturing Company, St. Louis, Mo., has been appointed southwestern representative of this company, and a branch office has been opened in the Candler building, Atlanta, Ga.

Dr. Charles P. Steinmetz of the General Electric Company recently delivered a series of two lectures on "Electrical Energy" before the students of the College of Engineering of the University of Illinois.

The Chicago Pneumatic Tool Company, Chicago, has enlarged its quarters in the Fisher building, by taking nearly the whole tenth floor.

The stockholders of the Union Steel Casting Co., Pittsburg, Pa., on April 18 authorized the increase in capital stock of the company from $1,500,000 to $2,500,000. The proceeds of the new stock will be used in erecting an addition to the present plant, doubling the capacity of the present works.

Rodman Gilder, secretary of the Crocker-Wheeler Company, Ampere, N. J., has resigned to go to Dick Bros. & Co., New York, brokers.

The Pressed Steel Car Co. is making extensive improvements at its Northside, Pittsburg, plant, which includes the installation of additional cranes and some new machinery.

The United States Cast Iron Pipe & Foundry Company, New York, has moved its Chicago office from the Rookery to the Peoples Gas building, where it will have about double the space afforded in its present quarters. The company has been in its present offices for the past 12 years.

Pittsburg Railway Club Visits Elmwood City Plant of National Tube Co.

C. H. Cartlidge, Bridge Engineer of the Chicago, Burlington & Quincy Railroad, recently gave a lecture to the College of Engineering, University of Illinois, on "Concrete Pile Trestles."

The car foremen in and near Wichita, Kas., have organized the Central Kansas Car Men's Association with twenty-seven charter members. The object of the association is to secure a more uniform understanding of the M. C. B. rules, and to discuss questions of interest pertaining to car interchange and repairs. Meetings will be held the first Thursday of each month.

The Western Electric Company, Chicago, has received an order to furnish telephones and selectors for use on train despatching circuits on the Duluth & Iron Range, the length of road aggregating 123 miles.

The Sioux City Service Company has recently placed orders with the Westinghouse Electric & Manufacturing Company, East Pittsburg, Pa., for a large number of modern interpole motors of 30-h. p. capacity, to replace all old types of motors now in service.

Recent Railway Mechanical Patents

Material for this department is compiled expressly for RAILWAY MASTER MECHANIC by Watson & Boyden, Patent and Trademark Attorneys and Solicitors, 918 F Street, N. W., Washington, D. C., and to them all inquiries in regard to patents, trademarks, copyrights, etc., and litigation affecting the same should be addressed.

A complete printed copy of the specification and drawing of any United States patent in print will be sent, postpaid, on application to the above firm, to any address for ten cents.

CAR-TRUCK SIDE FRAME AND JOURNAL-BOX.

986,559—George G. Floyd, of Granite, Ill., assignor to American Steel Foundries, New York.
Patented March 14, 1911.

This invention provides integral lugs such as 25, formed on the side frame itself and arranged to engage the journal box wedge 47 and hold it in place, as shown in the illustration.

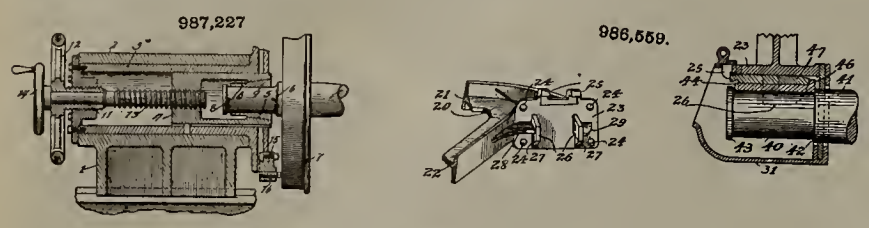

CAR-WHEEL LATHE.

987,227—George Edward Greenleaf, Plainfield, N. J.
Patented March 21, 1911.

In this machine there is provided two hand wheels 12 and 14, the first connected with a fine threaded screw sleeve 11, and the second connected with a coarse screw 13. The wheel 14 is used for moving the chuck plunger and the wheel 12 for locking the same in position.

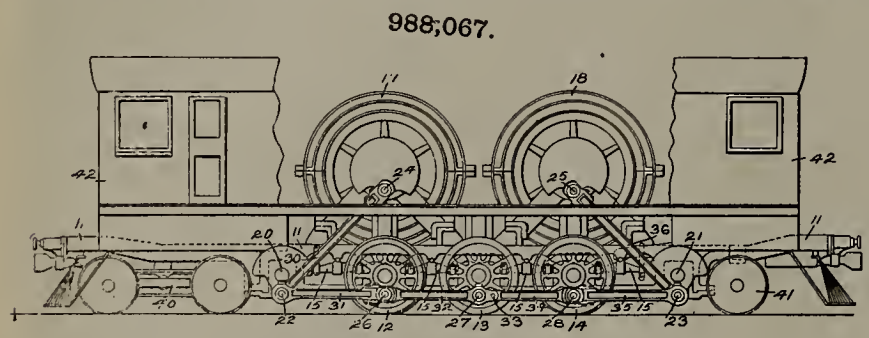

ELECTRIC LOCOMOTIVE.

988,067—Asa F. Batchelder, Schenectady, N. Y., assignor to General Electric Company.
Patented March 28, 1911.

This is a new type of electric locomotive designed for heavy haulage service. A plurality of drivers are arranged in the middle with a cab at each end. One or more large motors are mounted on the locomotive frame and connected to the drivers by means of a connecting rod and jack shaft. This arrangement has a number of advantages in which may be mentioned ready access to the motors and their brushes, almost unlimited space in which to place the motors, and the concentration of weight upon the driving wheels.

BRAKE-BEAM.

988,773—Philip T. Handiges, Cleveland, Ohio, assignor to Damascus Brake Beam Co., Cleveland.
Patented April 4, 1911.

This brake beam is especially designed for use in places where space does not permit of the securing nut of the tension member being located beyond the end of the beam. The brake shoe is carried by a sleeve which fits over the compression member and carries at its inner end a bracket adapted to receive the end of the tension member.

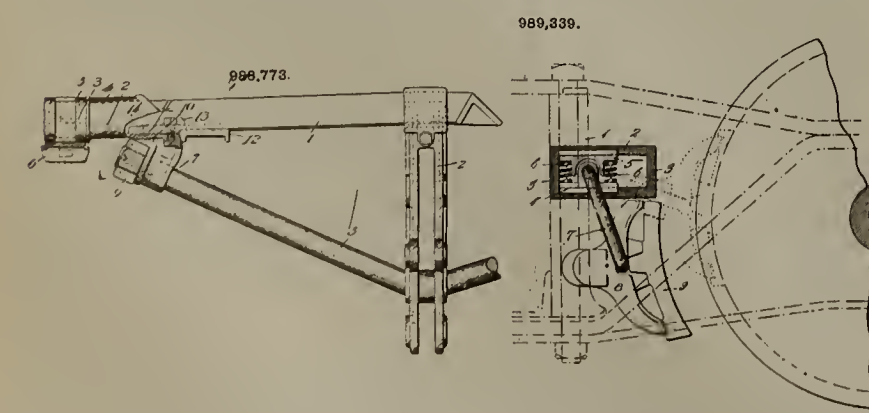

BRAKE-HANGER MOUNTING.

989,339—Frederick R. Cornwall, St. Louis, Mo., assignor to Chicago Railway Equipment Company, Chicago.
Patented April 11, 1911.

This invention provides a bracket adapted to be secured to the truck frame column and arranged to support the hanger journal. This journal is made in two parts and has ratchet teeth formed in the bracket. As the brake shoe or the wheel becomes worn the journal may be adjusted in the bracket toward the wheel so as to compensate for such wear.

BRAKE-BEAM.

989,780—Broderick Haskell, Franklin, Pa. Filed July 13, 1910.

A brake-beam composed of a tension member having screw threads at its ends and a compression member, inserted into a solid end casting. The brake heads are removably secured over the ends of the tension and compression members.

CAR-TRUCK.

989,859—Albert J. McCauley, St. Louis, Mo., assignor to the J. S. Andrews Company, Chicago.

A car truck having side frames each of which is composed of a casting having a bolster receiving opening, the walls of each of the openings being connected together, a bolster arranged in said openings, so as to rock in response to movements of the bolster. Bolster guides are mounted in the upper portion of the bolster openings, and these bolsters rock in reponse to the movements of the bolster.

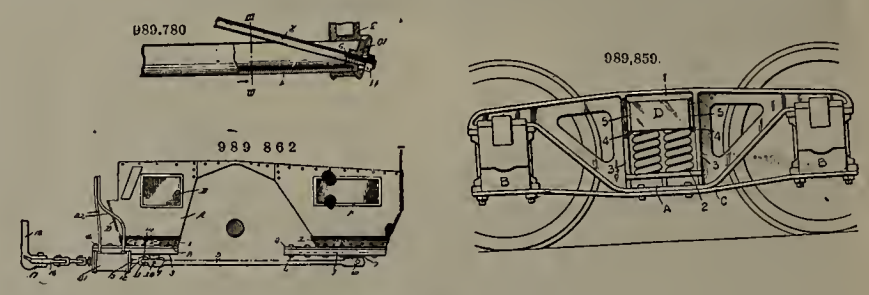

LOCOMOTIVE ASH-PAN.

989,862—Lawrence C. Mooney, Montgomery, Ala.

This ash-pan is composed of a body portion and discharging hoppers. The latter are composed of solid castings (fastened to the body of the ash-pan) longitudinally extending guide channels, and transverse slides with the ends resting in the guide channels. The transverse slides are moved longitudinally by means of a single connecting rod, thus discharging the ashes.

Motive Power.

The Baltimore & Ohio has ordered 10 six-wheel switching locomotives from the Baldwin Locomotive Works. The dimensions of the cylinders will be 21 in. x 26 in., the diameter of the driving wheels will be 52 in., and the total weight in working order will be 165,000 lbs.

The Seaboard Air Line, it is said, has ordered ten Pacific locomotives from the American Locomotive Co., and ten Mikado and five switching locomotives from the Baldwin Locomotive Works.

The Laurinburg & Southern has ordered one ten-wheel locomotive from the Baldwin Locomotive Works. The dimensions of the cylinders will be 18 in. x 26 in.

The Missouri, Kansas & Texas has ordered 9 switching locomotives from the Baldwin Locomotive Works, and 7 Pacific type locomotives from the American Locomotive Company.

The Illinois Central, it is reported, will spend a million dollars for 45 Mikado locomotives, each to have a tractive power of 57,000 lbs.

The Pennsylvania will build 77 locomotives at its Altoona shops.

The Grand Trunk Ry. and the Grand Trunk Pacific Ry., jointly, are in the market for 136 locomotives, 29 of which are for use in the United States between Detroit and Chicago.

W. R. Grace & Co., New York, has ordered 1 locomotive from the H. K. Porter Company.

The Norfolk & Western will build 12 Mikado locomotives at the company's shops. The dimensions of the cylinders will be 24 in. x 30 in., and the diameter of the driving wheels will be 56 in.

RAILWAY MASTER MECHANIC

Established 1878

Published by THE RAILWAY LIST COMPANY

WILLIAM E. MAGRAW, Pres. and Treas.
CHAS. S. MYERS, Vice-Pres.
C. C. ZIMMERMAN, Bus. Mgr.
J. M. CROWE, Mgr. Cent. Dist.

LYNDON F. WILSON, Managing Editor
OWEN W. MIDDLETON, Assoc. Editor
KENNETH L. VAN AUKEN, Assoc. Editor
WARREN EDWARDS, 2d V.-P. & Assoc. Editor

Office of Publication: Manhattan Building, Chicago
Telephone, Harrison 4948
Eastern Office: 50 Church Street, New York
Telephone Cortlandt 5765
Central Office: House Bldg., Pittsburg, Pa.

A Monthly Railway Journal

Devoted to the interests of railway power, car equipment, shops, machinery and supplies.
Communications on any topic suitable to our columns are solicited.
Subscription price, $2.00 a year; to foreign countries, $2.50, free of postage. Single copies, 20 cents. Advertising rates given on application to the office, by mail or in person.
In remitting, make all checks payable to the Railway List Company.
Papers should reach subscribers by the 16th of the month at the latest. Kindly notify us at once of any delay or failure to receive any issue and another copy will be very gladly sent.

Entered as Second-Class Matter June 18, 1895, at the Post Office at Chicago, Illinois, Under Act of March 3, 1879.

Vol. XXXV. Chicago, June, 1911 No. 6

CONTENTS.

Editorial—
The Situation in Brief....199
Repairs During Periods of Depression....199
Carbon Monoxide in the Producer....200
Economics of Tonnage Rating....200
Comparisons are Odious....201
Railway Storekeepers' Association....205
Reminiscences of a Master Car Builder....218
Economics of Tonnage Rating....220
The Coal Problem....228
Locomotive Repair Shops, K. C. M. & O. Ry....230
Van Horn-Endsley Spark Arrester....236
Washout System, D. L. & W. R. R....238
Personals....238
Among the Manufacturers....240
An Abrasion Resisting Metal....240
Our Own Convention Exhibit....241
Car Accessories....241
Lighting and Heating....247
Oils and Paints....248
Locomotive Equipment....249
Shop Equipment....253
Industrial Notes....265
Recent Railway Patents....266

THE SITUATION IN BRIEF.

The report of the Bureau of Railway Economics for the month of March, almost a month ahead of the corresponding report of the interstate Commerce Commission has this to say of the situation:

"March returns, when reduced to a per-mile basis, show a decrease with respect to those for the corresponding month of the previous year. Net operating revenue, that is, total operating revenues less operating expenses, for all roads reporting, show a decrease per-mile from the figure of March 1910 of $43 or 12.8%."

REPAIRS DURING PERIODS OF BUSINESS DEPRESSION.

Many of our larger railways are putting into effect a policy of retrenchment, following their usual precedent under adverse business conditions. For a new railway where the amount of business which will be handled is uncertain, and where the earning power has not been demonstrated, such a policy may be a good one. Can the same be said for our old and well established railways? Many railways are absolutely sure that they are going to get the business sooner or later, and still they adopt a policy of curtailing operating expenses, many times crippling departmental organization by laying off large numbers of men.

During a period of business depression a large percentage of the rolling stock is sometimes idle, and many times is deteriorating. At such times a portion of the rolling stock could advantageously be withdrawn from service and sent to the shops for a thorough overhauling. Traffic would not be crippled at the time, and later, when there is a strong demand, the equipment could be put in use with the certainty that it would give the greatest possible service with the least delay to traffic.

Instead of a thorough repairing, engines and cars are many times merely patched on account of a pressing need and because the repair departments are crowded far beyond normal capacity by the necessary immediate repairing of a large part of the rolling stock in order to get it in shape for the road. Many times a thorough job will mean a defect permanently remedied, but in case the time is short, temporary repairs are made which, with good luck, suffice until the reappearance of the equipment at the end of the run, when the same process will be repeated. Permanent repair work will decrease the chances of a failure on the road and possible resultant delay to traffic, and will give better and more economical operation.

The greatest efficiency of shops and labor can be obtained by using competent men, and by working the shop steadily; and maximum efficiency is not secured by following a period of slack operation by a period of forced operation greatly above normal capacity. The excessive wear on shop machinery due to overloading and the injuries occurring to shop machinery by reason of operation by inexperienced men will be a considerable item in the latter case.

When the demands on the shop are normal, time will be

available for the studying of methods of operation, for comparisons with other methods, for experimenting, and for working out a better organization and better methods. Waste may be detected and small economies effected, amounting to considerable in the aggregate. That rolling stock should be kept in good repair is essential in order to get the maximum amount of service from the rolling stock itself. But it is not only on rolling stock that defective equipment produces excessive wear. Defects in tires, worn tires, loose or dragging parts may also cause unnecessary wear, and even destruction of frogs, interlocking, cattle guards etc. Line and surface of track are also liable to be impaired by defective equipment or wrecks may result directly or indirectly.

In the maintenance of way department it is easy to see the advantage of a policy of greatest repair activity at the time of the least traffic. All maintenance work must be done between trains. When surfacing (for instance), the less the number of trains the fewer times will a temporary run-off be needed. In addition to again raising such run-offs (which is duplicated work in large part) it is frequently necessary to run back over a short stretch of track which was insufficiently tamped at the time the train was let over. Thus the section foreman will be able to keep up his track with the regular section crew, insuring that, in general, the work will be thoroughly done, which is doubtful if the work is done by an extra gang.

When trains are few, the section foreman may accomplish work with a small gang which he would not attempt when traffic was heavy, and when delay to tonnage freight trains might mean a serious interruption to traffic, especially if such a train were stopped going up a steep grade.

When track is poorly maintained, there is an extra injury both to roadbed and rolling stock. A low joint gives excessive jar to the rolling stock, causes battering of the rail joints and destructive wear on the rails.

It is plainly evident that in construction work there is advantage in putting work through when business conditions are poor, and when labor is plentiful and cheap. Better labor is obtainable in large amount, and at any time. Some of the motive power and rolling stock which would otherwise be idle and earning no interest could be used to good advantage. Many times construction costs are increased materially by the use of engines which should never leave the shop, or should be in the scrap pile. These engines are sent out because there is such a great demand for all the serviceable engines on the freight runs.

Labor is now beginning to choose between the permanent and the temporary job, and the preference is being given to the permanent job, even at an appreciable lower rate. Fluctuations in the demand for railway labor are tending to drive labor to other fields. If the maintenance and repair forces are cut down temporarily, a great many experienced men are liable to be lost permanently. Then when business again picks up and the whole equipment is needed, a large number of men must be obtained at once. There is little chance or time for intelligent selection, and the result is that there is obtained a great number of laborers, possibly of low intelligence, unorganized and inexperienced. The labor results obtained, under such circumstances, are small, and it takes considerable time to bring such labor to any degree of efficiency. If the original force were kept the work would be done much more cheaply and in a more lasting and workmanlike manner.

The efficiency and inefficiency of labor is being given a great deal of attention at the present time. What advantage is it to a laborer to increase his efficiency if he is to be laid off on the slightest provocation? It is only reasonable to suppose that he will try and make each task last as long as possible in the fear that its completion may be the time for dismissal.

CARBON MONOXIDE IN THE PRODUCER.

In bulletin number seven entitled "Essential factors in the formation of Producer Gas" which has recently been issued by the Bureau of Mines, the investigation developed that a very high temperature is necessary for the production of carbon monoxide from carbon dioxide and carbon. A very hot fuel bed means that gases will leave the producer at a high temperature, this lowering the efficiency of the producer as well as favoring clinkering. The authors show that the higher the velocity of the gas and the thinner the fuel bed the less will be the percentage of carbon monoxide formed. A heavy fuel bed in the boiler furnace would therefore favor the formation of carbon monoxide. Also, the greater the supply of air to a given depth of bed the less would be the percentage of this gas formed; therefore with a hot fuel bed the formation of a small amount of carbon monoxide is inevitable. In order that this carbon monoxide may be burned to carbon dioxide in some way sufficient air must be added to the hot gases as they leave the top of the fuel bed.

ECONOMICS OF TONNAGE RATING.

The article on the economics of tonnage rating suggests some points in connection with the present wide discussion of "scientific management." That the method of rating the tonnage of trains for different classes of engines, merely by their maximum capacity on the ruling grade, may result in waste, is evident from statistics given in the article. It is apparent that there is here an application of scientific principles resulting in an appreciable saving in cost. The investigation also gave a check on the freight engineers, in that the exact work and operation to be expected from a given engine, properly handled, was obtained.

The collection of operating data and comparison with theoretical computations, gives valuable information on the efficiency of types of engines, and on variations among engines of the same type. Much of the information obtained is of value in other problems, such as the proper spacing of automatic signals, economical grade revision, etc. Economical railway location would also imply a consideration of many of the points of economical tonnage ratings.

Comparisons are Odious

Not one of the fellows, to whom we give so much space in this connection and in this issue, cut any ice a few years ago. This looks like a knock, but it is far from it. The people who are illustrated in this illustrious group are not nearly so big as were their predecessors in the same offices. The writer takes the privilege which has been taken by a whole lot of magazine muck-rakers. He says, without qualification, that there is no chance of comparison between Theodore Curtis and Pulaski Leeds; between Jim Walsh and George W. Stevens (though there is something to be said later on in favor of Stevens; between Don McBain and ——— (his name is forgotten); between George Wildin and the predecessor who never existed because he never went to the conventions; between Brazier and one of his predecessors who trained in the same ranks; and Gaines, who never had any predecessor.

Lentz—John S.—has been with us and the Lehigh Valley since the early days of the Master Car Builders' Association. They used to have a story up in Pennsylvania. One fellow asked another where Packerton was. Naturally, the answer displayed ignorance: "Why," said the man who asked the question, on an afterthought, "I believe that's where Lentz lives." Right; there is only one citizen in Packerton, outside of the shops—that is Lentz. "Good morning, Mr. Lentz; how is everything up at Packerton?"

Years ago they had a superintendent of motive power on the Rock Island. Now all they have is a mechanical engineer; and he has forgotten whether he is a mechanical man or an operating man or a train dispatcher or what. Most of his time he spends in Washington answering fool questions that the framers of the interstate commerce law knew were not included within the scope of their jurisdiction, anyway. Curtis has been with him part of the time, and it is nip and tuck whether the mechanical affairs of the Louisville & Nashville or of the Chicago, Rock Island & Pacific have gone the better because of the necessary absence of their respective chief mechanical officers.

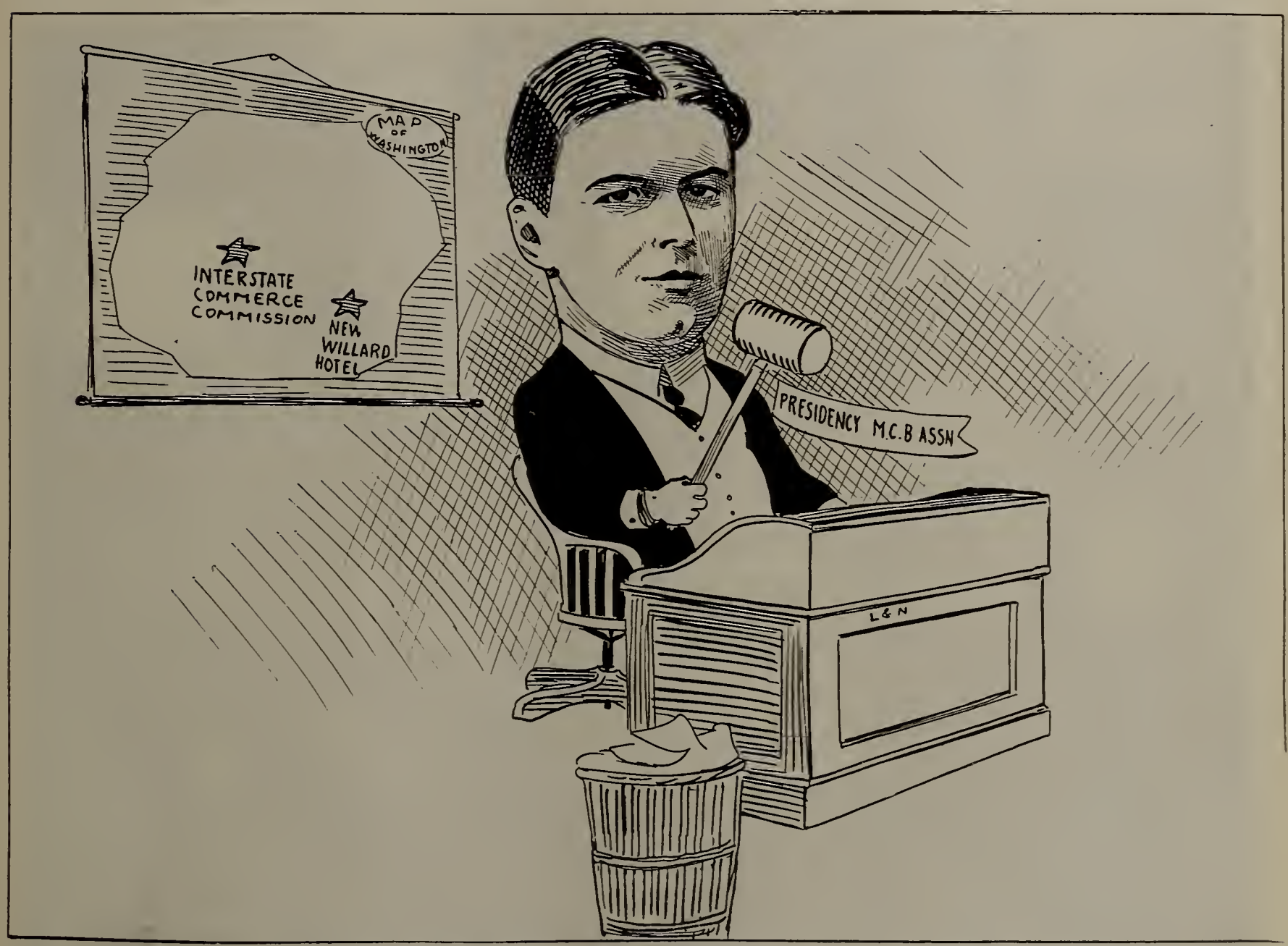

Theodore H. Curtis—The Map Is Not for Reference; He Knows It by Heart.

The picture of Gaines makes him look serious. He is not. Gaines is one of the most cheerful mechanical officers on American railroads. The expression which appears on his face in the picture which accompanies this was due to the fact that the photographer asked him a question during the process of taking his picture, and Mr. Gaines replied in such a heavy tone of voice that the weight of it was reflected upon his countenance. But most of the engines on the Central of Georgia are equipped with the Gaines feed-water heater, and this is the answer as to what F. F. has done since he became a Southerner.

Nobody knows much about Rumney. He has a way of keeping his mouth shut except when he has something to say. When Wildin was up there at Meadville he did all the talking and

Rumney didn't have any chance. His predecessors, Morris and Barr, not to mention the rest of them, said all that was good to say about the Erie before Underwood and Wildin took hold of it.

A few minutes ago something was said about the impossibility of any of these fellows matching up with the men of long ago. Who can, for instance, in these days when almost anything is a libel on the Interstate Commerce Commission use the free and wholesome language which was the everyday speech of Frederick D. Adams, Jacob N. Barr, J. N. Lauder, and those strong men of the early days? There is hardly one except Setchell that we can depend upon to keep up our connection with other days. Manchester tries to be good to the Chicago, Milwaukee & St. Paul, but he has the handicap of Jim DeVoy. Barr had a lot of troubles, but they were not the same as those that Manchester has.

Here is a good puzzle question: Who was in charge of mechanical affairs on the New York, New Haven & Hartford before Wildin? Or on the New York Central before Watt and Deems and Brazier and Whyte—before Whyte listened to the siren's call and went into a business in which he could make some money? Or on the Boston & Albany, before the time of Tom Purves? Who has known anything about such a road as the Old Colony since the decease of J. N. Lauder? Or, in fact, to whom can we turn for information upon no matter what subject, since Forney—because his knowledge was necessary to help out omniscience—has answered the inevitable call? Of course, Dr. Sinclair tries to fill the bill, but he and I know that we can't do it.

In the same way, Bentley tries his best to fill the gap that that little Manxman, Robert Quayle, has left since he quit being one of the strong men of the conventions. To a student of literature it always seems curious that there never were but three family names on the Isle of Man—Quayle, Caine, and Mylrea. So long as Quayle is here we can forget the rest of them and the Northwestern Railway can afford to do the same thing—so long as it has a few Bentleys to move up to the king row. Schroyer is there already. He has been there so long that everybody knows him, except those who have a recollection of how he used to look when he wore a mustache. It's ten to one that neither anyone else nor Bentley remembers the time when William Smith ruled the destinies of that road. Schroyer does.

Charles E. Fuller in His Office at Omaha.

The times have changed. Somebody said—was it Cicero or Seneca?—"Tempora mutantur et nos mutamur in illis." Within the recollection of most of the people who will read this, Seley was a draftsman on the St. Paul, Minneapolis & Manitoba and a little while later mechanical engineer on the Norfolk & Western, whose destinies our old friend, Billy Lewis—God bless him!—ruled for so many years that he has probably forgotten the old friends he used to have when he was at La Crosse, and another Billy—McIntosh—was at Winona; McBain was a travel-

ing engineer, and probably did more than anyone except Thompson—Thompy—to make the Traveling Engineers' Association what it is (before the boys thought of calling themselves road foremen of engines); Curtis was a draftsman down at the Brooks Locomotive Works with John Player and Franklin Taylor Reese, not to mention Mr. Hinman; Walsh was trying to sell Galena oil, before the Supreme Court knocked out the monopoly of the Standard; nobody knows what Stewart was doing, but it is a safe bet that he was cheerful about it; George Wildin was wiring a car for the president of the Central of Georgia, because there wasn't a nigger on the line that could do it, and the secretary's office allow one to go—President Leander Garey congratulated the 58 members present at the convention in New York that there were so many of them present. He also offered several reasons why the master car builders of the railroads of the United States should meet once a year. "The man who stays at home and thinks there is no more to learn stands still until he is swept away to make room for someone better qualified." Those were the views of those who founded the two associations that have grown so important today. Those were the days of W. E. Chamberlain—John's brother—John Kirby, F. D. Adams, G. W. Demarest, Reuben Wells, Ben

Joseph W. Taylor.—A Daily Occurrence in His Office.

Anthony's hands were too big; Wilson Symons sat in the office and told him how good a job he had done; Brazier was a foreman down at East Fitchburg, holding down a job that Frank Eddy has held down ever since—better, because Eddy is heavier—and later, as superintendent of the Boston, New York, London Liverpool, Amsterdam, Berlin and Paris Refrigerator Company—was that the name?—at Elsdon, Ill.; since then he has been connected with the Illinois Central and has lived at Yonkers, showing that even a naturally good man will sometimes go wrong; Crawford has invented an underfeed stoker and has been to Europe; Angus Sinclair, since those early days, has acquired a doctor's degree, with a gown and cap, and still keeps on doing just what he used to do—seeing things and writing about them.

Thirty-five years ago—that is as far back as the records of Welch, Godfrey Rhodes, Robert Blackall and so many others whose names bring up so many recollections that it is safer to pass them by. The antidote is to say that these were also the days of John W. Cloud, who was supposed to be the only possible secretary until it was found that he had quietly been training up one Joe Taylor. The first time the present writer ever called upon John Cloud he had the floors of two big rooms in The Rookery covered with blueprints; Joe has had a whole floor of the Old Colony covered with blueprints ever since. He is still "hollering" for reports in order to convince the several associations that they should put up a building of their own in Chicago and let him have all the floor space.

Although "there were giants in the land in those days," of which we are speaking, they were the progenitors, or at least the predecessors, of some comfortably large men. As has been

intimated, there couldn't have been any Taylor, except that there was a Cloud; there wouldn't have been any Walsh except that there was once and still is a Stevens; there would not have been a Bentley except that there was a Quayle—and it may be said, parenthetically, that there would not have been a good many of the best mechanical men the country knows if there had been no Quayle—there wouldn't have been so big a Seley if there had been no George Wilson, no Billy Lewis and no Barnum; and there would have been no Alexander Stewart had there not been a W. H. Thomas before him. Of course, it is utterly impossible to account for John Lentz, Angus Sinclair, and Charlie Schroyer on this basis; but they must have had some prototypes. These men have had the opportunity to grow with the growth of the associations of which they have been the efficient officers, and their growth is aptly represented by the measure of the volume which is necessary to contain their proceedings. Until 1882 a measly little book with pages a little larger than a postal card was sufficient to contain the proceedings of either association. At the present time Taylor's annual volumes are running a race with Webster's dictionary. A few years ago the report of the secretary and treasurer showed a balance on hand of $21.24. Now the regular balance is such as to swerve the scales in the second financial center of the country. A few years ago some of the questions discussed related to the use of cars capable of carrying fifteen tons, and to be hauled sometimes by two 35-ton locomotives coupled together; and the yearly assessments for memberships were $10. The fellows who grappled with the questions—and paid the $10—which begun with those named and passed on through all the intricacies relating to the establishment of the air brake and the standardization of a coupler were big men. Their faithful and intelligent work we inherit. Because their work was faithful and serious, we can now for a moment be allowed to discuss them in lighter vein. It is in recognition of this inheritance that we introduce to you in these pages your well-known friends without the mantle of dignity that doth hedge kings.

H. T. Bentley.—His Desk Will Never Close.

AN INDICTMENT OF OUR LAWMAKERS.

In a recent address before the Chicago Transportation Association, State's Attorney Wayman, of that city, very pointedly covered the relation of the railways and the public as follows:

"Most of the trouble between the people and the railroads has been caused by demagogues in legislatures who forced the railroads to pour in money to get what they ought to have and to keep them from getting what they ought not to have. When the railroads deal directly with the people there is no trouble. It makes no difference what the Supreme Court says about the Sherman act. It won't make any difference with the railroads. The railroads are anxious to obey the law."

RAILWAY STOREKEEPERS' ASSOCIATION.

The eighth annual convention of the Railway Storekeepers' Association was held at the Hotel Pfister, Milwaukee, Wis., on Monday, May 22, with the largest attendance in the history of the association. The reports were received from the various officers and committees indicated hard work and research during the past year. The convention was formally opened on Monday afternoon with an address of welcome by Mayor Seidel, which was answered by W. R. Shoop (B. R. & P.). Following this an address was made by the president, J. H. Waterman (C. B. & Q.). The general discussion on The Need for a Standard Material Classification and Disbursements occupied the remainder of the day. The convention opened on Tuesday morning with the topical subject, The Return of Cement Sacks, Carboys, Etc. Several papers were read. The final reports of the committees were received and balance of the papers were read and discussed on May 24. The subject of discussion was The Standardization of Tinware. A paper by J. R. Mulroy (St. L. & S. F.), illustrated and described the various items of railway tinware. The following officers for ensuing year were elected: President, W. F. Jones (N. Y. C. & H. R.), New York; first vice-president, J. R. Mulroy (St. L. & S. F.), Springfield, Mo.; second vice-president, W. R. Shoop (B. R. & P), Rochester, N. Y.; secretary-treasurer, J. P. Murphy (L. S. & M. S.), Collenwood, Ohio. Following are extracts from the papers:

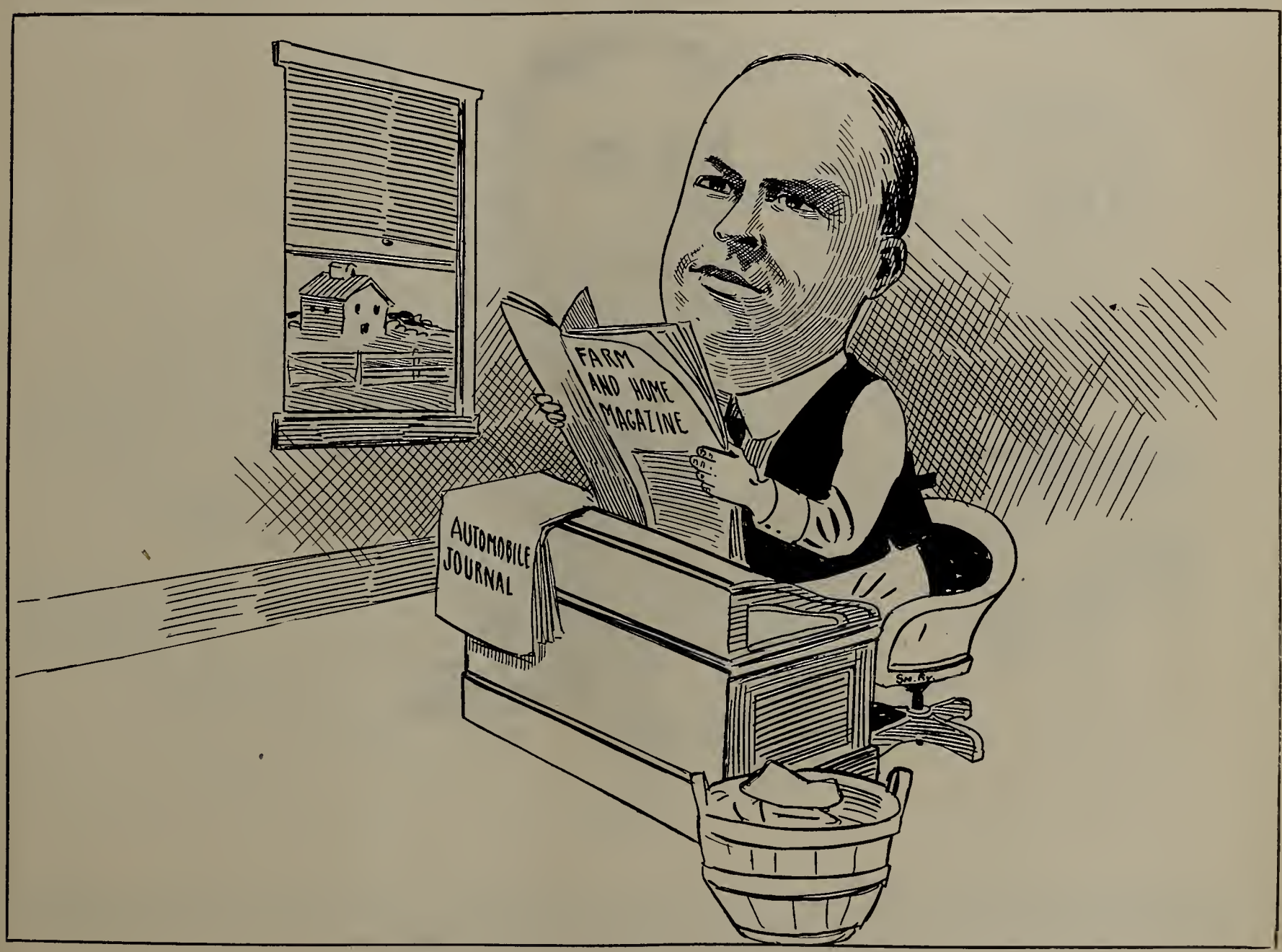

A. Stewart.—This is Only a Hobby, Not an Occupation.

Stock Upkeep and Stock Reduction.

By J. Swift.

At the present time, when the amount of money tied up in stock is a vital question on all our roads, it is of the utmost importance that a storekeeper holds his stock down to the minimum and at the same time not delay work in the shop or on the line by being unable to deliver the proper material when required. In order to do this, it not only requires close attention on the part of the storekeeper, but also hearty co-operation of assistants under him.

A storekeeper should know what his stock consists of and should educate the men under him what the material is, also purpose same is required for. He should also keep posted as to how the work in the shop is progressing, and shape his course accordingly.

Prompt delivery of material, when requisition is placed, is very essential in order to operate with a minimum stock. for, if the material is not forthcoming when required, it naturally follows that the storekeeper will order heavier in order to protect his work.

It is necessary for us to carry a large numebr of castings, a large amount of iron, steel and brass, as our requirements will not run anywhere near the same for any two succeeding months, owing to the various types of locomotives we handle, running as they do from the small eight-wheeler of the early seventies to the most modern type of the Mallet compound. And by educating the stock men to examine the blue prints carefully and be governed by measurements more than by pattern numbers, in a great many instances patterns can be substituted, thus making a considerable saving along this line.

I recently had a case where an order came from the shop

for a thousand 1-inch by 8-inch stay bolts. Our supply of this size was running low but we had a large supply of 1-inch by 7½-inch. By consulting the foreman in charge of the work, I ascertained that the 1-inch by 7½-inch bolts would answer his requirements. We were thus able to fill his order promptly, still keep a supply of the 8-inch bolts on the shelf and at the same time dispose of a surplus, making a small reduction on this item alone. If just such cases as this are watched it is surprising what results cann be accomplished in as short a period as thirty days.

In conclusion will say that a storekeeper who is operating with a minimum stock and at the same time is delivering the goods when the other fellow calls for it, is to be congratulated, as it clearly shows he is up-to-date and not carrying a lot of dead stock.

D. F. Crawford.—Not All Men Are Ambidextrous.

The Standardization of Tinware.

By C. E. Wright (Frisco Lines).

Few subjects of more importance than the standardizing of tinware have been brought before this association. There are very few items of railway supplies so generally used, and, I might say, so much abused, as tinware.

If we look through the catalogues of the various manufacturers of tinware we will find hardly any two of them making tinware of the same pattern, and very few of them making tinware suitable for railroad use; therefore, for a railroad to obtain just what is adapted to its purposes, it is necessary for it to make its tinware in its own shop, or have it made by a manufacturer in accordance with the railroad company's blue prints. In the latter instance, to avoid an unreasonable delay, it is necessary to contract with a manufacturer to furnish all tinware required for a given period, and, of course, it is expected that the manufacturer will keep a stock made up in anticipation of future orders, but he often fails to do so, which frequently causes the railroad company considerable inconvenience.

There are many objections that could be offered to the present method of each road having their own patterns of tinware, but I will mention but one, i. e., the continual trading among railroad employes of the most expensive articles, lanterns and spring engine oilers. A railroad that purchases a lantern that is a favorite among the men that use them will find their lanterns scattered all over the country. I have in mind a certain road which operated a large terminal in Kansas City. This road purchased a lantern that was a great favorite with switchmen and trainmen on account of its light weight and reliability. As an unreasonable quantity of these lanterns were being purchased by this road, an investigation was made, and it was learned that they had been furnishing lanterns to nearly every road with a terminal in Kansas City. This road had about the same experience with their spring engine oiler, which was also a favorite among enginemen.

In adopting a standard for tinware, one of the most important features to consider is the quality of materials used in the manufacture of same, as good materials and workmanship mean durability. The largest users of railway tinware are trainmen, enginemen and agents. I have found that if these men are given a good article they will usually take

care of it, but if given a poor article—a lantern that will blow out in a strong wind or while giving signals, or will cover the floor or seat with oil when set down—a caboose side lamp that will drip oil all over the desk or any papers that might be on the desk, oil cans that will saturate lockers or train boxes with oil—they will soon find a means of getting rid of same with a view to procuring something new, in the hope that the company has purchased a better article in the meantime. Of course, in many instances the defects are trifling and could be remedied very quickly in a tin shop, but the average trainman or engineman seldom thinks of the tin shop while at the terminal.

are usually pretty near the Missouri line when we get back home on the job. But, if we don't maintain the system and get that work done right, we may be looking for one of those Missouri jobs. Each of you has undoubtedly run down some particular error to find that, in changing men, some instruction as to your system has not been given or has been forgotten. And the error may have been reported from way up the line where's its too high to answer that it won't occur again. And why has this error occurred or any of those daily errors? Usually through the change of men who have not been told or for one of many reasons are slow to learn and act.

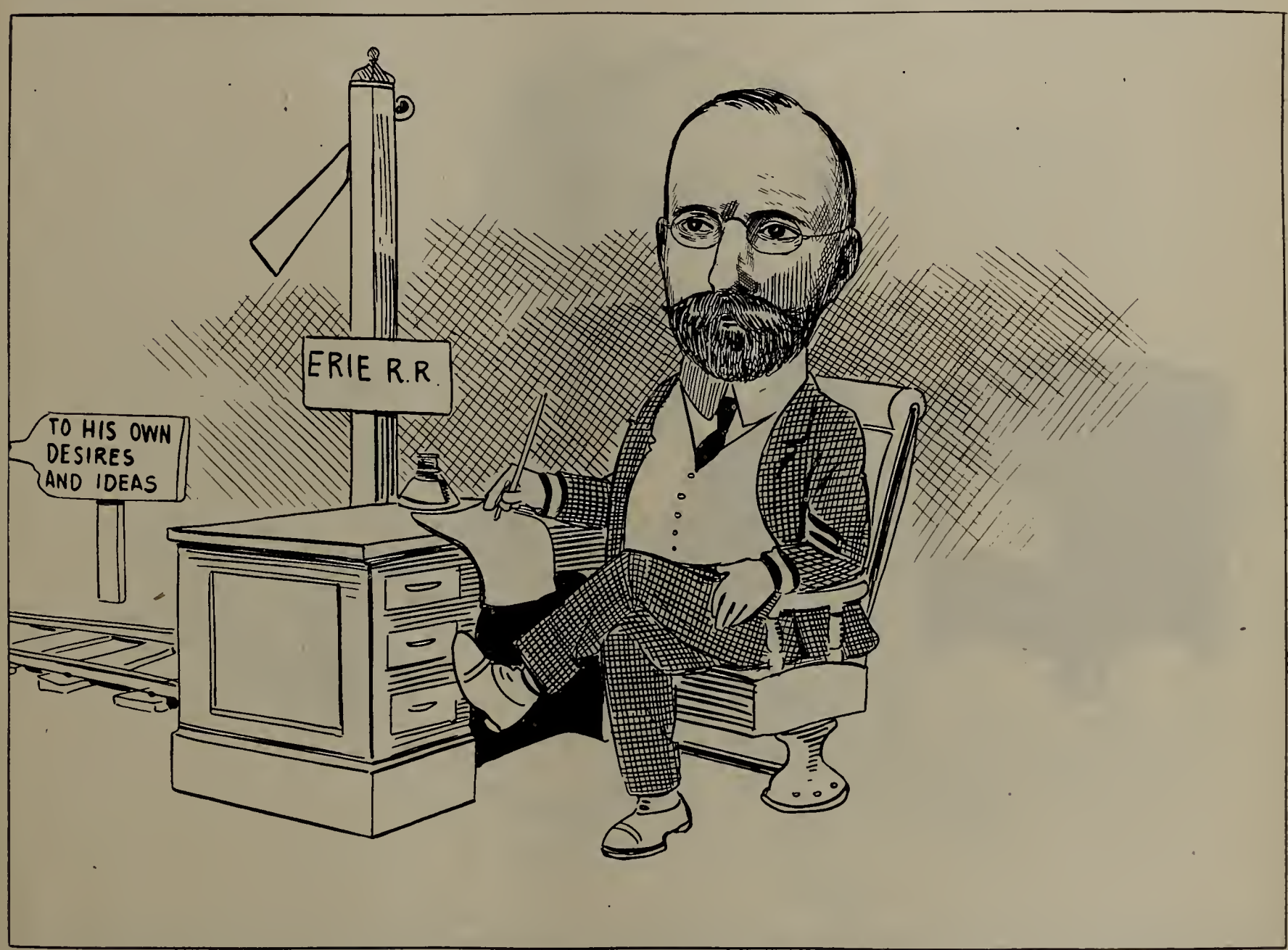

F. Rumney.—They Say He is Always Given a Clear Track.

The Apprentice System in the Store Department.

By N. A. Mears.

In considering any large business enterprise which depends largely upon human labor for its results, we find that organization and system are the two most important features. No matter how good the organization without the proper system, its work may be increased both in quantity and quality by the application of system. Just so with the system, if the organization is weak and the system is not maintained, the results are not obtained. In all large organizations we find them supported by a system divided or arranged to handle each branch of their work in order to give the best returns.

Each storekeeper feels that his own particular store department system is just about right; or, at least better than any other that has been shown him, and while we come to the storekeepers' convention and talk our troubles over, we

Other departments of the railroads and outside corporations have long ago acknowledged, not only the necessity, but the profit, of employing bright young men and showing them the advantage of obtaining their experience and education from the bottom, at the same time holding before them the assurance of a periodical increase in their wages as compensation for their diligent application to learning well their work at hand and preparation for the next step in their chosen profession. Adding responsibility under a competent foreman, with each promotion and corresponding increase in wages.

On most railroads the store department has been made up of the likeliest young men of the locality, many of them without any higher education than part of the grammar grades, and secured by the weeding out process of holding and promoting the proficient common workmen about the

shops and storehouse. The personnel of this association shows that the selection, in most cases, has been a wise one.

But with the coming of foreign labor on the railroad, and the better education of the present time, we find that the best of the young men start with other employment, or go to it after a short stay in the store department, because the immediate scale of wages is somewhat higher, not looking ahead to see the opportunities which certainly are open to a man qualified in the store department work.

It is a common practice for a young man to put in an application for apprenticeship in the mechanical department and then seek employment in the store department at 16 to 18 cents per hour, which he will gladly quit when the opportunity may come for him to start his assured apprenticeship at 7 cents per hour.

A young man will rise in a store department for a year or two by reason of his studious application and the opportune vacancies just ahead of him, till he stops just high enough in the department to see that with all his knowledge he has only covered one-half or perhaps one-third of the foundation details that would make his eligible to further promotion. In order to keep in line he has to go back and familiarize himself with them. At this time he has about all the duties he can perform, and may even be putting in some overtime to keep an eye on the job ahead. As he realizes his position in the organization, the chances are ten to one he will take the first position that may be open to him, where he may make a little more money even though he has to leave his place that he has worked up the line to hold.

And we find since we have acquired the foreign labor that there are less of these fellows available, who have, perhaps a small education but lots of horse sense, and we have to do our best with the foreign laborer or the school boy just past the age limit allowing him to work.

There is quite a gap between these boys, usually office boys or messengers, and the place where we could use them as stockmen, shippers, etc., and to get them there I propose the apprentice system.

To get the best out of this system the head of the department should pass on each apprentice and know by card record his character, originality, executive ability, application and general deportment. He should guide the apprentice through his education by lectures, examinations and promotion after proper length of service, other points considered.

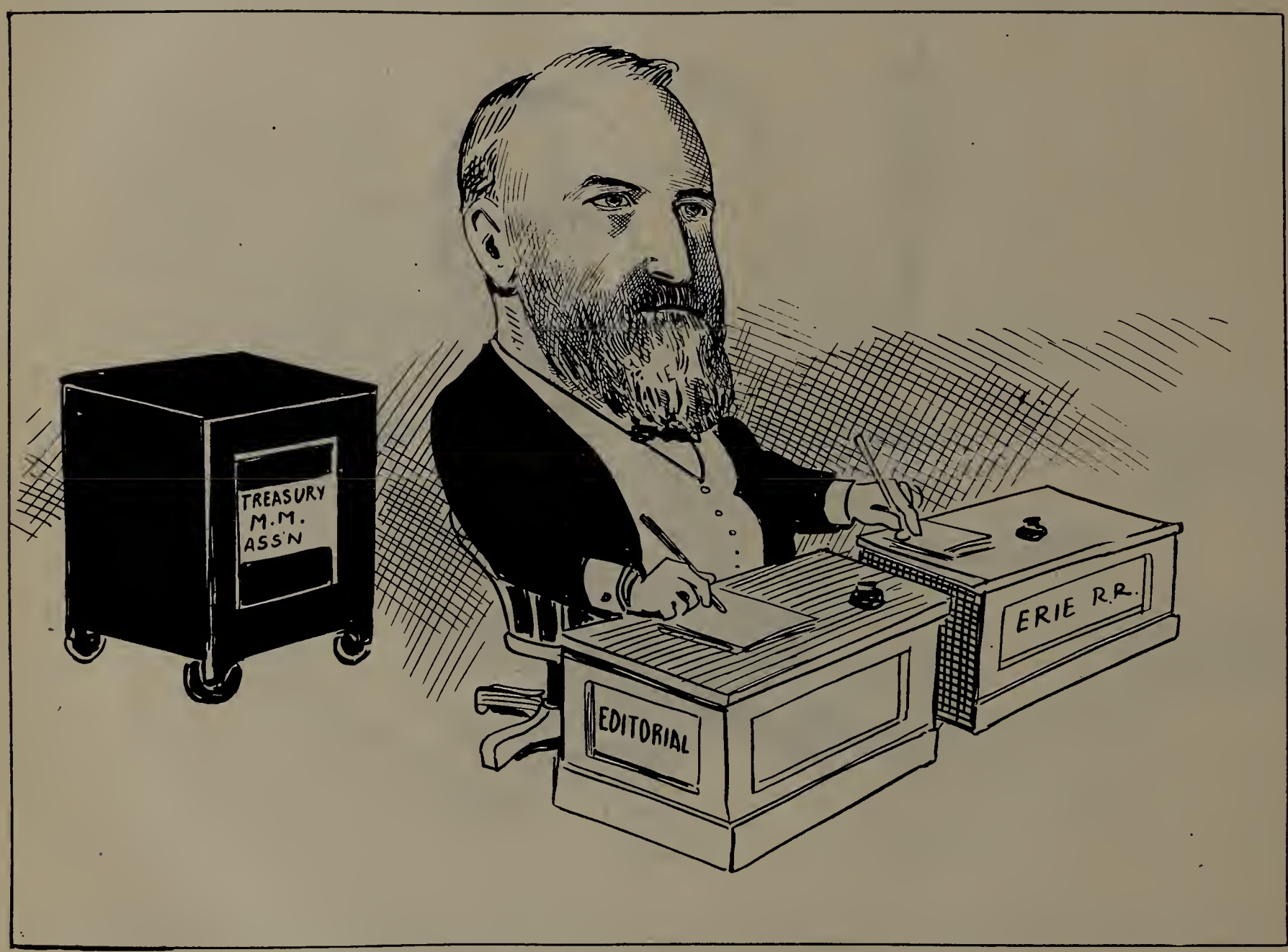

Angus Sinclair.—Mr. Crawford Has Nothing on Him.

To outline an apprentice system in detail requires considerable local knowledge of the department to which it is to be applied, but I believe a general plan could be made up even to rates for positions, and this outline would help us all in starting a system that would give the desired result.

For instance—

The start might be made at office boy.

To retail boy or shop messenger.

Next, caseman or storehouse helper.

Helper in the receiving or shipping departments.

Back to the office for experience in the requisition department.

Invoice work and file and statement work.

Then some time on the supply car, and by this time the boy

or man will be ready to assume the first position of actual responsibility as stock clerk or assistant foreman.

It may appear that an apprentice system would increase the pay-roll, but by reduction of present rates to make the starting rate low enough, an equal amount will be gained to increase the present rates for higher promotion or may even allow some saving. When you consider the cost of two or three hundred dollar men spending several hours in straightening out some inexperienced employes' mistakes, even an increase in the payroll on certain rates might cause a decrease in actual expenses by putting such wasted time on its proper work or even reducing the number of rates. And it is bound to reduce the grief and keep the organization ready at all times to properly handle the current work. Even an entire increase in the payroll would be warranted with the increased efficiency gained by having these properly educated men handling all branches of the work, minimizing the time lost in correcting errors.

This will result in getting the right kind of young men to start, having properly educated and experienced help on all classes of work and make an organization that can be depended upon. It will also do away with the large amount of unaccountable and annoying daily errors, which occur where we are doing the work with men who are only looking for pay day, and are replaced so often that it is almost impossible to keep them properly instructed or watched, to obtain the proper results.

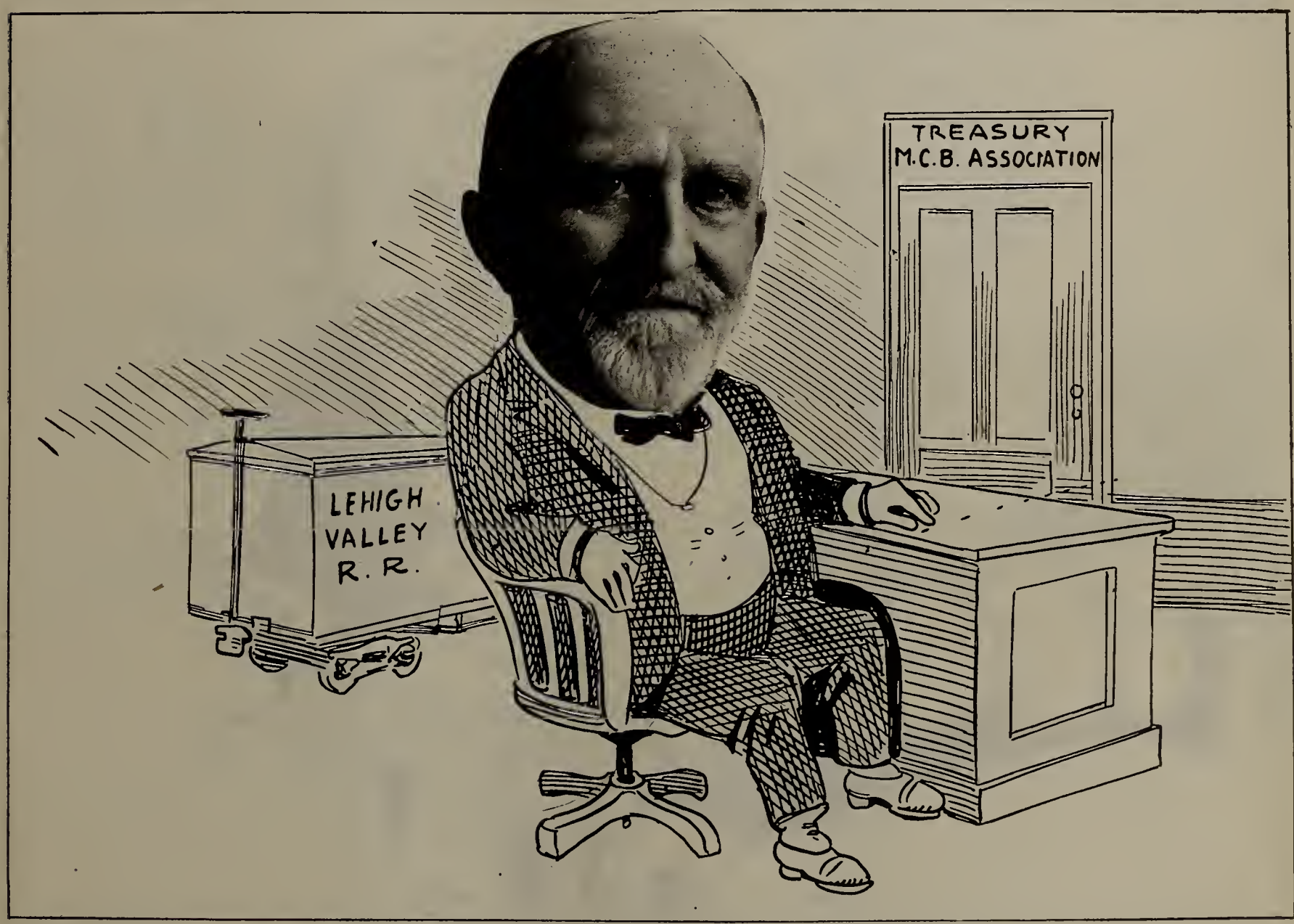

John S. Lentz.—"The Watchdog of the Treasury."

The Railway as a Manufacturer.

By W. T. Bissell.

Every railroad of any size is of necessity a manufacturer, but the extent of its output varies widely with different railroads. On any railroad it is necessary to finish the locomotive and car parts from rough castings, timbers, etc., according to its own drawings. Strictly speaking, we would not consider such a railroad a manufacturer, but when it is found necessary to pay a higher price to a manufacturer for certain locomotive and car specialties, it occurs to the railroad officials that by having brass or iron castings made a large number of the parts could be made at a price considerably less than the purchase price. This railroad then becomes a manufacturer of certain commodities.

A few years ago a greater number of railroads were manufacturing brass and grey iron castings, and a few even manufactured car wheels, but this has been discontinued to a great extent. Different railroads today are manufacturing tinware, bolts, locomotive springs, crank pins, piston rods, injector tubes, piston packing, large twist drills, reamers, pipe nipples, forgings and many other items.

The question naturally arises, what should the railroads purchase, and what should they manufacture? This will depend to some extent on local conditions. If a railroad has its general shops and storehouses located a great distance from a manufacturing market, it is necessary for it to depend largely on its shops for such articles as can be turned out, to avoid delays in receiving shipments from a distant market. On the other hand, a railroad with storehouses located close to a large market, with good competition, could well afford to purchase a great many items that it might manufacture under other conditions.

There is one important feature connected with the manu-

facturing in a railroad shop, and that is the economy in working over old material saved at the scrap docks through the watchfulness of the scrap yard organization. A portion of this material can be re-worked at a small expense, and for that reason any railroad should be prepared to work over forgings, bolts, etc., in order to take advantage of this saving. On every well arranged scrap dock the storekeeper has hammers and shears operated by air or steam for straightening bolts, and cutting off the bad ends. This equipment would only be a little more complete if a threading machine were added to the arrangement, so that the bolts might be transferred at once to the storehouse and put into use. In the same way a nut tapping machine could be put into use, and the old nuts retapped, the good ones taken to storehouse, and the ones which were found to be of no use could be scrapped without unnecessary handling to and from the shop.

In regard to the manufacturing of such articles as tinware, piston packing, locomotive springs, crank pins, etc., I believe it is generally conceded by railroad officials that the railroad shops cannot compete with the concerns who make a specialty of manufacturing such materials. In the case of tinware, some of the larger manufacturers have expensive machinery handled by operators at a low scale of wages while the railroads usually pay the highest wages for skilled mechanics who do a great deal of hand work, which results in higher costs in most cases. Notwithstanding this fact, many articles can be manufactured in the shops cheaper than they can be purchased, and at the same time make an article that is better suited to local conditions and more satisfactory; however, it has been found necessary to relieve the shop of a large amount of this work on account of the congested condition, due to increase in amount of rolling stock in operation.

In the days before the stores departments of the railroads had received the official recognition that they are given today, and the mechanical and roadway departments looked after their own supplies, the keeping up of the stock and the operation of the shop was in one department; the master mechanic, being responsible for the stock, was careful that shop orders had the proper attention, but nowadays when the general managers are urging the shops to get the locomotives and cars repaired, and at the same time cutting the expense wherever possible, the shop has not found spare time and mechanics to properly attend to the increasing demands for material which it manufactures. At the same time, the mechanical department officials are not so much interested in the manufacturing of material, due to overcrowded condition of the shops. They would prefer that it be purchased so that the shop be relieved of that amount of work to give place to work on locomotives. This, however, does not relieve the storekeeper of his troubles, and he should have a representative meet and confer with the shop organization so that they may know at all times what articles are most needed and arrange their work accordingly. If the storekeeper's suggestions are followed as to what material should be gotten out first, both departments will be saved considerable inconvenience. In this way the stock at the storehouse can be kept up so that it will not be necessary for the shop foreman to change his machine, when set up

Chas. A. Seley.—He Has the Title of "Mechanical Engineer."

to finish a certain casting, in order to get out a few castings of another pattern for shipment that day.

No doubt we all have had some delays in getting shop-made articles from our shops during the past year or more, since the railroads have found it necessary to urge economy in their operating departments. The manufacturing work interferes to some extent with the locomotive and car work. These few delays might be overcome if an appropriation were allowed for the manufacturing shops, separate from the amount set aside for repairing and rebuilding locomotives and cars.

It should be definitely decided what items are to be made in the shop; the decision being based on a careful comparison of prices of articles made in the past with those purchased. A careful estimate should then be made of the monthly consumption of each article. With this information the mechanical department could intelligently arrange the shop forces so that they would turn out the material in about the right quantities, which would insure the proper stock of shop-made materials at all times in the storehouse.

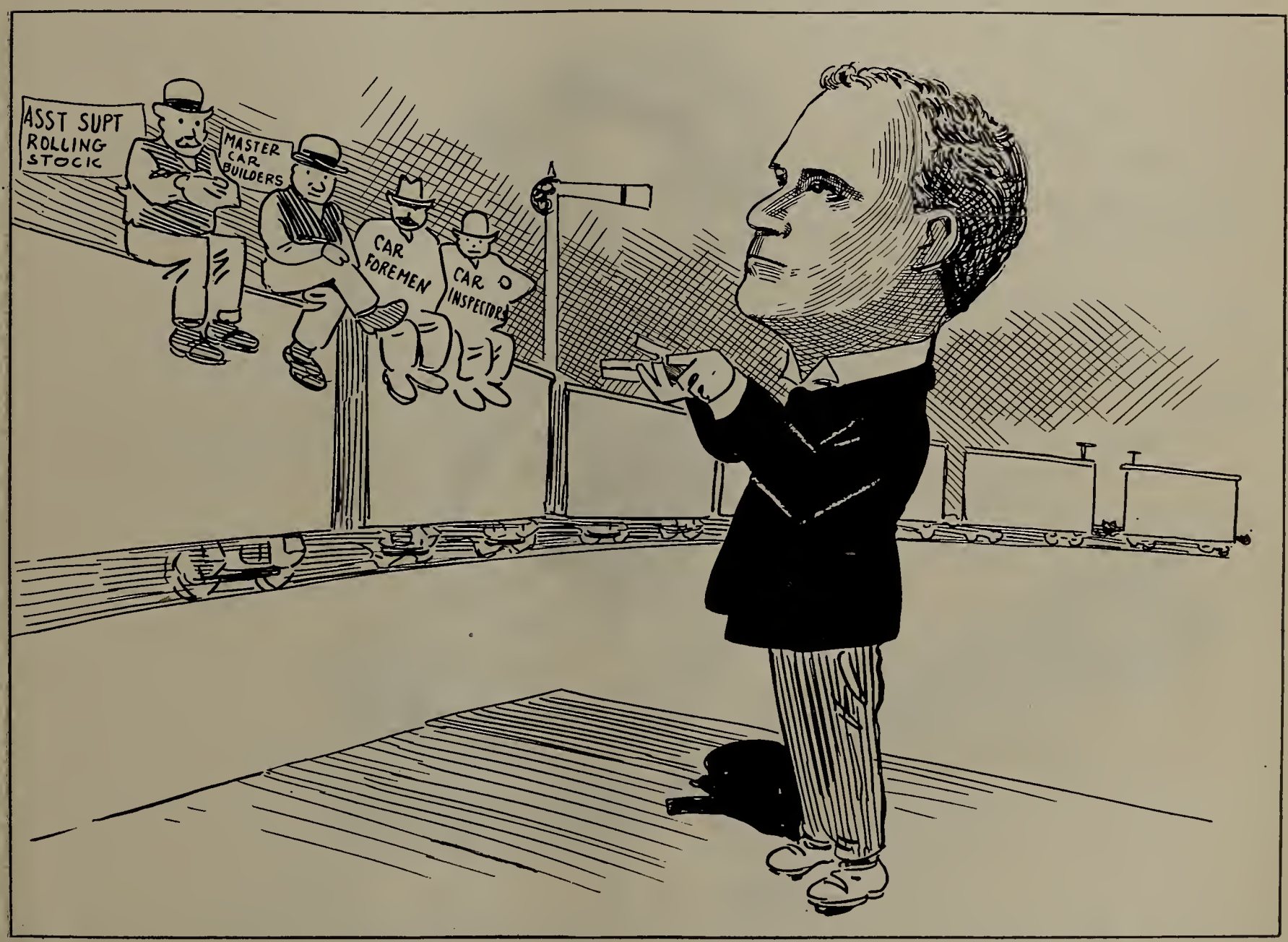

F. W. Brazier.—This Is Why His Subordinates Are so Well Informed.

The Railway as a Manufacturer.

By M. D. Franey, A. M. M., L. S. & M. S. Ry.

The prime duty of a railway in the commercial world is one of transportation, like other industries it is subject to, and must successfully meet very keen competition. Its principal revenue is derived from the transportation of freight and passengers to points within its territory.

From a transportation standpoint it is desirable to locate industries along the right of way, so that raw material may be transported to, and finished material from, the industry.

It is necessary to house, clothe and feed the employes of these industries. Towns and cities increase in proportion with additional revenue to the railroad from freight and passenger transportation.

The above applies to railway employes; they, too, add to the commercial activity of towns and cities in which they are located.

Giving manufacturers full credit for the excellent progress they have made during the past few years, the railway shop managers are entitled to credit for equal, if not greater, progress in economy of repairs and manufacture.

Their shop output has increased so rapidly during the past ten years that manufacturers of machinery used in railway shops, were compelled to completely de-design and strengthen their machines, to withstand the severe service and new conditions imposed by modern shop managers.

The day rate of skilled labor has increased in the past fifteen years approximately fifty per cent, the weight of locomotives from 86,000 pounds to 220,000 pounds, approximately 155 per cent.

The special equipment on the locomotive of today is far in excess of similar equipment on the one of fifteen years ago. It has been necessary to replace some of this equipment on account of change in design to keep pace with new conditions, such as increased speed, etc., otherwise the old equipment would have given good service for some time with less expense. The increased weight and speed of trains have also added to the cost of repairs for locomotives.

Notwithstanding the above increase in rate of pay, weights of parts, speed of trains, special equipment, etc., the cost of

locomotive repairs per mile has only increased during the last fifteen years from 4 cents to 6¾ cents.

It is necessary to carry in stock certain parts in various sizes, for example when building new locomotives that require cylinders 23 inch diameter only one size or diameter of packing rings is required. For the repair shop it is necessary to carry in stock rings of 23, 23 1/16, 23⅛, 23 3/16, 23¼-inch diameter, or five different sizes of packing rings for the 23-inch diameter cylinder, where only one size would be required for new work.

The above applies to practically all locomotive repair parts. This makes it necessary to increase pattern sizes so that blanks can be finished to maximum dimensions of cylinders, or minimum dimensions of journals. The removal of this extra material increases the labor cost per unit. It also requires a larger stock of these repair parts on account of this variation in size.

Good shop practice requires that many of these parts be manufactured at the repair shop where they may be promptly secured in their various sizes, expediting repairs to locomotives reducing the time out of service and the percentage of power out of service for repairs.

In purchasing material quality should be considered, also the stability of the manufacturer, the time of delivery and quantity required are at times of more importance than comparative costs.

The railway cannot expect to manufacture all of its supplies, there are certain standard equipment it should not manufacture, though it may be fully justified in making repairs to said equipment.

To encourage the maintenance of standards, and uniformity of design, it is sometimes good business policy to purchase finished products from the manufacturer at a cost slightly higher than some of the detail parts could be manufactured by the railway.

I have in mind at this time the air brake equipment, with its various designs, its multiplicity of parts, each design classified, each part symbolized.

The organization of this industry is so perfect as to standardize the air brake equipment on the railways of the world, any part great or small is symbolized in its class, and will interchange with any of the hundreds of parts for which it is symbolized, wherever they may be found.

C. A. Schroyer.—The Last Word in Passenger Equipment.

Improved designs have been developed as required to meet new conditions, and efficient corps of experts are employed to design, build and improve these features, they check the service, note defects and assist in developing perfection.

This organization increases the overhead charges, though it insures a more perfect air brake equipment; its cost of maintenance must be spread over the product of the plant and be paid for by the consumer.

The above applies to many other manufacturers who devote their time and energy to the design and development of railway specialties. I am mindful of the assistance rendered by the railway organization in suggesting and assisting to perfect these designs when I say such industries should be encouraged as far as consistent with sound business methods.

The Railway as a Manufacturer.

By E. J. McVeigh.

The railway must necessarily be a manufacturer, but the important question is where will it stop. Beyond doubt the place to stop is the point where manufacturing does not pay. In other words, where the article can be bought cheaper in the trade than it can be manufactured by the railway. This would seem to be a self-evident proposition, but to keep right in the matter, as in many others, requires eternal vigilance on the part of someone. Our railways are today manufacturing many articles that could be bought at less than they cost to make in our shop, and they go on doing this until some one happens to notice it, and that item is dropped. But what is every man's business is no one's business, and what we require is a more systematic supervision of this branch of our work.

The supply department is much to blame in this matter. How often do we place orders on shops for certain items of material without first making sure that such items can be made there better and cheaper than it could be purchased? Are such orders not often made with the idea of decreasing our bills payable without considering whether we are, or are not, saving money? It is good business to compare our own cost of manufacture with the price at which we may purchase, but it is not good business to manufacture without carefully making their comparison.

The shop people were not the first to sin in this matter. In fact, they have stood out against it in most cases, until forced to give in, and the bad example so set has led to much evil, for it soon became known that while it was difficult to get certain things by purchase, no one seemed to care about the same thing made in the shop, so it was just made and that was all there was to it. Thus the evil grew, until it got away beyond orders placed by the stores department, and when John Smith of the motive power department had his requisition for a new desk returned cancelled by the head of his department, who considered that the old desk was good enough for a few years yet, John told his troubles to James Jones of the car department, and Jim being a good chap, and knowing that he would want something from the machine shop some day, got busy and made the desk for Smith. His men were not cabinet builders, they didn't have the material to hand, but they managed it all right. And what did it cost? Neither Jim Jones nor anyone else knows, but it is a safe bet that it was at least twice what such a desk could be bought for, and the railway paid. While the purchasing agent was pleased to see the item cancelled, and the head of the motive power department congratulated himself that time, on having saved a few dollars.

Had we not encouraged this "make it in the shop" business, the evil would never have grown to its present proportions. We are all more or less to blame in the matter, and it is up to each one of us to help to put a stop to it. The violated principle here, makes of this a very serious matter indeed, for our heads of departments no longer control expenditure. It is not the one desk that Jones of the car shop made for Smith of the motive power, but we all soon become Smiths and Jones. A small leak can let in

F. F. Gaines.—Headquarters Are a Long Way Off and Yet There Is Work to Be Done.

water enough to sink a ship if left alone, and a leak that grows is naturally much worse.

With our present organization, it would be unfair to ask the storekeeper to act as a spy on his friends, Jones and Smith, in their little game of scratch my back and I'll scratch yours, and the fact of the matter is he won't do it. In the first place he won't act the spy because he don't like that kind of thing, and in the second place, he won't be held responsible anyway, and he expects to want his own back scratched a little some day. This is not a simple matter to be disposed of by a general order, and so long as we are human we will never get it just right, just as we never reach perfection in anything. But to hit anywhere near the mark, we must shoot in the direction of it, and to control this business to any extent, we must have someone on the ground responsible for it. Why is not the storekeeper the man? It is a question of supplies, and he is the supply man, and it comes back to the question of his extended jurisdiction.

The method that suggests itself is that it should be laid down as a first principle that nothing in the nature of supplies be manufactured in shops other than to storekeeper's order. Then it is up to him to see that he does not place orders for items that can be purchased for less money than it will cost to make them; he to inform the purchasing agent on this point, and shop people to have the privilege of returning improper orders, when they can show that they are such. An inspector, or other official, going through the shop and noting work other than regular repairs, may call for stores order covering same. If order cannot be produced, he has found something to inquire into. If it can, and he is still not satisfied, the storekeeper must explain. This would have a tendency to make both shop people and storekeeper careful. Then when it is understood that storekeeper is responsible, and must account for all such work in shops, and he has a right to demand explanation, the shop people will have him, as well as other officials to dodge when doing unauthorized work. This will give Jones a good reason for refusing to make that desk for Smith. Quite frequently he only wants a reason for refusing to do it anyway.

This is not offered as a "Cure-all," but like the good doctor's prescription, it is intended to "assist nature," human nature in this case. The storekeeper will not act as a spy on his fellow employes, nor will be continue to "butt in" when he has no authority. But make this his business and he will do it to an extent that will greatly improve the present conditions.

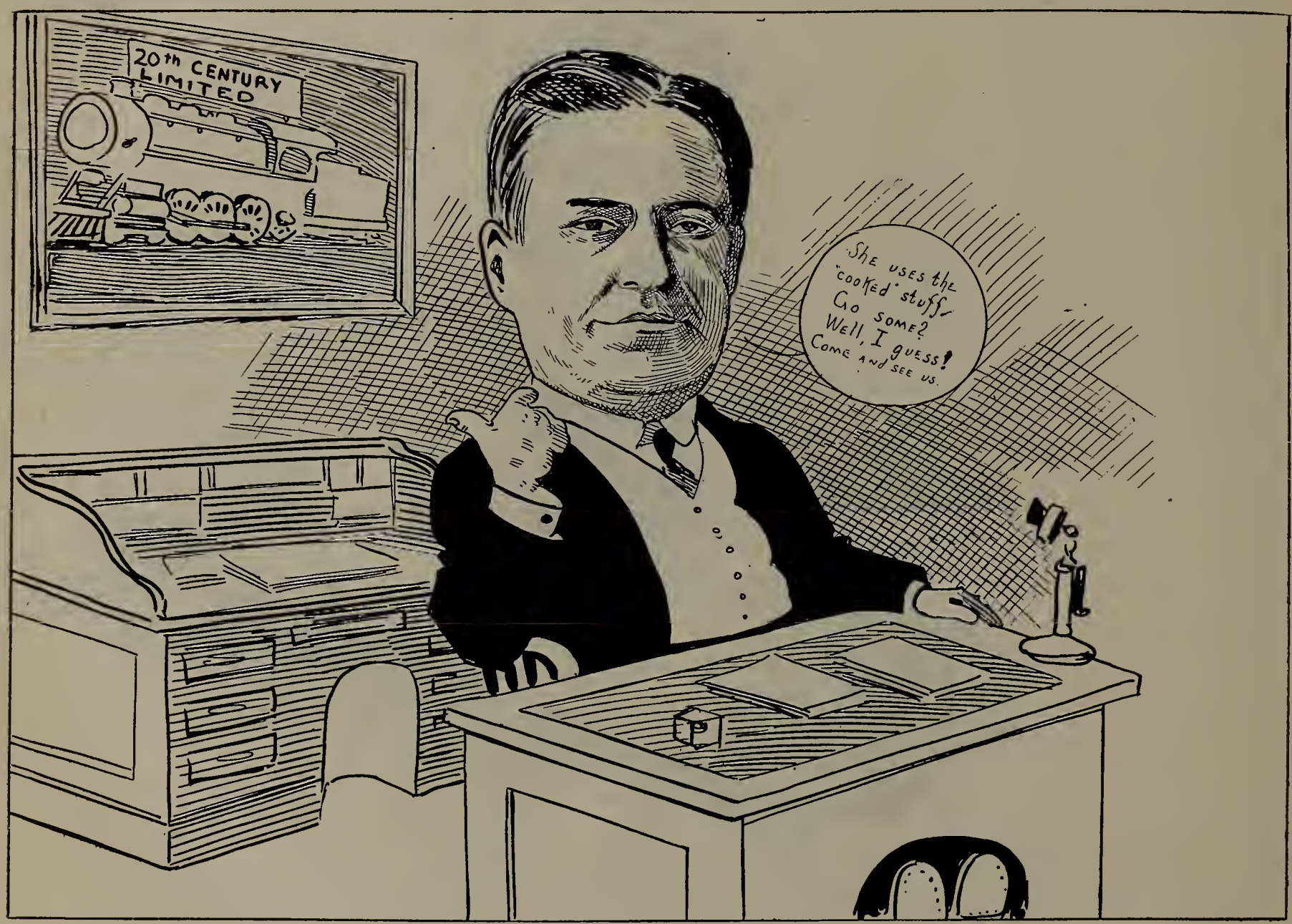

D. R. MacBain.—His Hobby.

It is not necessary to tell railway men that as soon as a railway becomes big enough it should manufacture its own bar iron, brass and grey castings, machine bolts, track bolts and spikes, frogs and switches, build its own cars, etc., etc. These are large matters that have been fully considered and decided on. But even in these matters we must be constantly on the alert to see that our cast does not go up, and our standard of quality go down. Because we beat all creation last year, we must not take it for granted that we are doing the same thing this year. Men outside who make their living by manufacturing some one of these items are constantly straining every nerve to beat us at the game, we must keep

ahead, or, in our own interest, quit. Then conditions change, and where we were forced to manufacture a thing a few years ago because no one else manufactured it, we may find today that it is now made both better and cheaper than we can do it. We should not go on making things just because we started to do so some years ago.

Then we must guard against the danger of putting up with an inferior thing because we make it ourselves in the mistaken idea that we are not losing money by doing so. Take one item that most roads delight to make for their own use, the cold set used by our track men. Now one good cold set will cut twenty rails, and many cut a hundred. Twenty bad sets will not cut one rail. But it costs us as much to make the bad tool as it does to make a good one, yet we often let the poor article pass because it is made in our own shop, whereas, if we purchased this tool at the same price it costs us to make it we would return it to the seller for replacement, and we would insist, and rightly, that each set be a good one. This applies to many other items, as well as cold sets.

Some years ago one of our railway papers published an article highly commending a shop foreman for a great saving he was making for his company by manufacturing coal hammers out of the twelve-inch waste ends of 1¾ square tool steel. I drew the editor's attention to the fact that a piece of 1¾ square tool steel twelve inches long, was not generally considered waste, and I figured out for him what a coal hammer so made would cost. It came to about one dollar and forty cents, and I told him that we used a coal hammer that was quite satisfactory, and it cost us twelve cents. The editor asked me to excuse him from publishing my letter and figures as he did not want to emphasize the fact that he was as big an ass as the foreman who had tried to gain a reputation for economical management on such a poor foundation.

My own experience leads me to believe that a railway shop designed and equipped for repairs to cars or locomotives cannot turn out special articles cheaply, and we will all agree that we should not make an article at a greater cost than it may be bought for. But it is not also true that we should buy rather than manufacture, when we can manufacture at a cost only equal to that at which we can buy? Do not we increase business generally by so doing which must rebound to the benefit of the railways, but we make friends for the railways, and surely there never was a time in the history of the world when a friend was a more valuable asset than today.

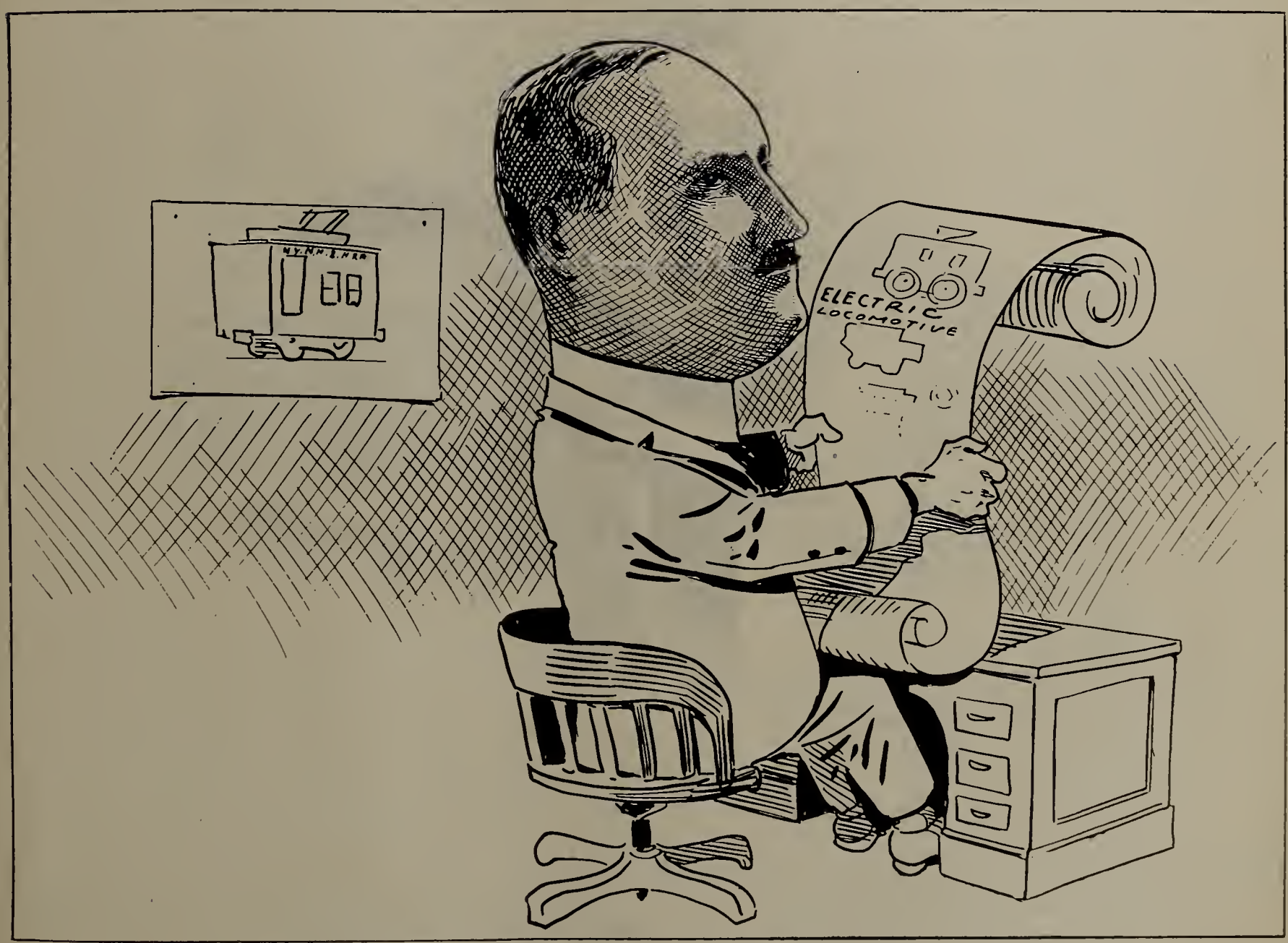

G. W. Wildin.—If He Hasn't Been Doing This, Somebody on the New Haven Has.

I would not attempt to lay down rules for all people to work to, but in this matter of manufacturing there are certain general rules that should be followed. These are:

First.—The factory should be under the charge of the general storekeeper when situated near his headquarters, or under the divisional storekeeper on the division where factory may be situated.

Second.—The factory accounts should be kept separate from store and shop accounts, and a regular monthly balance sheet gotten out for each factory, their raw material, new tools, and repairs, and their pay roll being their debit, while their credit would be the value of finished article turned out.

Third.—Accept no man's word as to what it costs to make anything, find out for yourself. Then compare the cost, and the article with the same thing as it can be purchased, when the thing is of such a nature that it can be purchased.

Fourth.—Have standards and stick to them.

It may or may not pay a railway company to manufacture. It is highly probable that it may not if the business is not closely looked after, and close attention is the only way to know the truth, and I am of the opinion that there are few roads that would not greatly benefit by a careful enquiry into this matter, and the establishing of a system whereby it could, and would, be watched carefully.

ly, both in numbers and in productive capacity. Improved methods and competition have acted together to so reduce manufacturing costs and profits in the class of articles ordinarily made in the railroad shops that they can now be bought at prices which render the economy of making them very questionable.

We are creatures of habit to a large extent—and sometimes I think that the railroad business has a tendency to put a man in a rut and keep him there—and so we go on manufacturing articles of daily use because we have done so for fifty years and tradition tells us that the practice was economical.

J. F. Walsh.—He Always Uses a Great Deal of Energy in His Work.

The Railway as a Manufacturer.

By Geo. G. Yeomans.

The practice of manufacturing their own materials was inaugurated by the railroads a long time ago, when there were many good reasons for such action which do not exist today, and when they were able to derive a much greater profit from their shop work than is possible under present conditions. At that time, foundries and factories were comparatively few and small and were not so widely distributed over the country. Efficiency engineers had not been invented, manufacturing costs were relatively high, and manufacturing profits higher. Exorbitant prices were frequently charged particularly by the makers of special articles which entered largely into the repair and maintenance of rolling stock; and there is no question but that considerable savings were effected by the railroads in that day.

At the present time, factories have multiplied tremendous-

Also, the master mechanic or shop superintendent often has a very natural but false pride in attempting to demonstrate that he can perform any shop operation just a little better and cheaper than an outsider, and the result is, quite frequently, a good showing on paper which, while made with no intent to mislead, will not stand successfully under expert scrutiny. It is seldom that in any work of this kind performed at a railroad shop all of the items of actual cost are included in the accounts, and it frequently happens that such operations are reported to be a good deal cheaper than is actually the case when all of the proper charges are included in the figures.

Today, the question of how far a railroad can profitably engage in the manufacture of the various articles which it needs, is one which is likely to be answered in as many different ways as there are persons who attempt to answer it. This wide divergence of opinion almost amounts to proof

positive that it is not economical in a very broad sense. If the saving to be effected were so pronounced as to be universally recognized, there would be no necessity for any attempt to analyze the subject. Broadly seated, however, I believe that as a general rule it is not economical for a railroad to undertake the manufacture of articles that are purely incidental to its daily operations, and not in themselves of prime importance in the direct production of transportation. For example, while there might be a distinct advantage in the building of locomotives or freight cars in the railroad company's shops if the work was carried on systematically and continuously, as it is in any commercial plant, it is doubtful whether the same advantage would be gained by the intermittent use of the shop facilities for that purpose. Still, even so, there is more to be gained by the railroads in the manufacture of these prime necessities of transportation than in the smaller and less important articles of everyday use, and, what is more to the point, there is a much greater chance of their gaining it.

It is true that the railroads can buy just as good machinery as the manufacturer; that they can employ just as good workmen; that they can procure equally as good materials. There seems to be no reason why they cannot produce just as good an article, and at no greater cost than the commercial manufacturer, but, so far as my observation goes, they do not do so except in occasional instances, and in drawing any conclusions we must deal with conditions as they are, and not as they might be or should be.

Again, it is true that the railroads must have shop buildings, equipment and organization in order to efficiently maintain their rolling stock. They must pay the taxes and the carrying charges on these plants, and with all these overhead expenses as a part of their fixed charges whether they engage in manufacturing or not, it would seem specially desirable for them to make the fullest possible use of these facilities and to manufacture practically everything they require. In considering this phase of the question, we must not forget that the shops are primarily designed and organized for the maintenance and repair of the rolling stock, and not for manufacturing purposes. Shop design alone has considerable influence on manufacturing costs. It is true that these shops in properly finishing and applying the material necessary to keep the equipment in good condition, are, to a certain extent, performing some of the functions of the manufacturer, but not by any means to the extent which is expressed by the term "engaging in manufacture." Furthermore, that is the class of work for which the shops are designed and which they are prepared to handle to the best advantage. It does not necessarily follow that because a railroad can build a locomotive economically in its own shops, it will derive a similar benefit from manufacturing the driving springs; nor does the fact that a box car can be built better and cheaper than it can be bought prove that the same is true of a hand car.

There are a number of reasons why this is so. As we have already seen, the maintenance of the equipment is the real purpose for which the shop facilities are provided, and the successful operation of the railroad depends in a large measure upon the efficient use of those facilities for that particular purpose. This can only mean that manufacturing, as such, must be a matter of secondary importance. Otherwise, the real work suffers.

If we analyze this a little further we find that in ordinary practice the repair work is very properly given the preference and that when the shops are crowded the manufacturing is pushed further and further into the background. Also, we find that it is just at this particular time that the railroad could secure the greatest advantage from making its own material, because business is generally good, manufacturers are crowded, deliveries are delayed and prices are high; so that at the very time when the railroads could derive the greatest profit from manufacturing, they are in a measure prevented from reaping it, by the volume of their legitimate business.

Another reason is found in the fact that closer and better supervision is naturally given to the work which is of prime importance, while the secondary work is more or less slighted. As a general rule, the shop superintendent and general foreman have just a little more on their hands than they can manage to squeeze into the working hours. Some things have to be passed over hastily. This is never the work in which the mechanical department is specially interested—such jobs, for instance, as might result in an engine failure if not well done. It is always the boy tapping nuts, or cutting bolts with worn-out taps and dies, in one corner of the machine shop, or the apprentice forging a claw bar or a track chisel in the blacksmith shop. Have you ever noticed how much of the manufacturing in a railroad shop is done by boys and apprentices? The skilled workmen are put on the most important work, that is, the work for which the shops were provided. Really, it is more important to the roadmaster or section foreman to have first class work done on his tools than on the motive power, but the master mechanic is in charge of the shops and his interest in track tools is secondary.

It is customary with a great many railroads to manufacture all of the machine bolts used in car construction, but there are very few that have ever undertaken to manufacture their own track bolts. There is much less variation in the sizes and lengths of track bolts than in car bolts. If the practice of manufacturing the latter is economical, would not the manufacture of the former be equally so? May it not be that the preference given to car bolts is due to the fact that the mechanical department is more interested in them than they are in track bolts?

The result of this lack of skilled workmanship and close supervision is usually quite noticeable upon a close inspection of the product and a comparison with the similar product of a commercial manufacturer. With the latter, his output—whatever it may be—is of prime importance. His living depends upon his being able to sell it in competition with a dozen other makers. He is concentrating his attention upon doing one thing well. He is specializing in a manner impossible in the average railroad shop. His goods are subject to the careful inspection of discriminating buyers. Every incentive is present to produce a combination of good workmanship and low cost of production. Most of these incentives are lacking in the average railroad shop and it is not to be wondered at that generally speaking the workmanship and equality of the product does not compare favorably with that of the commercial manufacturing establishment.

The average railroad mechanic will, as a rule, accept and attempt to use articles manufactured in the shops without question, simply because they are made in the shops, and when he finds difficulty in using them on account of improper design or poor workmanship, he simply throws them in the scrap heap, also without question or complaint, and makes a requisition for more. This is one of the incidental costs of shop manufacture which does not appear in the records.

Another is the more lavish and wasteful use of the products of home manufacture, as compared with the purchased article. There is little doubt but that when the supply of material is apparently unlimited and its source is directly under the control of the usuers, less care is exercised in this respect than is the case when a more direct outlay is involved. Also, there is less likeihood of detecting the misuse or abuse of material in the process of manufacture when the producer and consumer are identical.

These hidden items of cost, or concealed expenses, are constantly being discovered and becoming better understood.

Those who are studying the subject seriously are beginning to question the wisdom of the practice. They are learning that the margin of possible profit has shrunk almost to the vanishing point, and that in many cases railroads can actually buy a good many of the articles they have been accustomed to manufacture, cheaper than they can produce them.

I know of several railroads which in recent years have closed down and abandoned well equipped brass foundries and have contracted with commercial foundries for their requirements. I know of others which have leased their iron foundries to commercial operators, and of one railroad which, when the foundry it was operating burned down, did not replace it but is purchasing the castings it requires with a resultant credit to its operating expenses. A spring shop built and put in operation when the price of elliptic springs was seven or eight cents per pound, and when the margin between the cost of the spring steel and the finished article was such as to admit of a considerable saving, is an entirely different proposition from the same shop today, when new elliptic springs can be bought for a price very slightly above the cost of the steel from which they are made.

Whenever a railroad company can re-work scrap material in such a way as to produce therefrom material that is expensive in first cost as compared with the value of the scrap, the practice of doing so is a real economy. For example, high grade scrap, such as is recovered from radial stays and similar material, can be piled, heated and hammered out under a heavy steam hammer into bars suitable for equalizers and for locomotive drawbars, at a cost from two and three-fourths to three cents per pound, and the product replaces material which if purchased new would cost at least five cents per pound. Besides this, no special machinery is required. The work may be done on a large steam hammer, which is a necessary tool, but which is not always kept fully employed with other work.

Where the saving to be made in this manner can be calculated as high as from $30.00 to $40.00 per ton, the practice is justified; but in the case of manufacturing ordinary bar iron, where the greatest possible saving between the value of the scrap and finish product is from $12.00 to $15.00 per ton, it often happens that the labor expended in selecting and handling the scrap and in re-working it exceeds the difference between its value and the cost of the new material, and unless the line is carefully drawn, the practice is more apt to be expensive than economical.

Reminiscences of a Master Car Builder

HIS FIRST BOX CAR.

By H. M. Perry.

[Editor's Note: Mr. Perry claims the distinction of being the oldest attendant at the Master Car Builders' Convention (oldest in attendance but not in years), having attended the preliminary meeting at the Massasoit House in Springfield, Mass., in 1867 in company with his father who was a charter member of the association. He went to work as a boy in the shops of the old Hartford Providence and Fishkill R. R. at Hartford, Conn., and remained with the road through the successive changes of the Boston, Hartford & Erie and New York and New England, working up to the position of general foreman of the shops at Hartford, then chief draftsman, mechanical engineer and assistant superintendent of motive power at the general shops of the road at Norwood, Mass. Owing to a change in management he resigned to accept a position as superintendent of the Muskegon Car and Engine Co. at Muskegon, Mich., and four years later he accepted the position of master car builder of the Flint & Pere Marquette, resigning after three years to become master car builder of the Santa Fe at Topeka. Soon after this he was offered a position to organize the new repair department at Pullman, Ill., and afterwards was made general superintendent of the entire Pullman works. After three years at Pullman he accepted a position as superintendent of the United States Rolling Stock works as Hegewisch, Ill., and since that time has devoted himself largely to special work, he appraised the entire rolling stock of the Wisconsin Central R. R. at the time of reorganization, made an exhaustive investigation and report on, "brake beams in service," which excited considerable comment at the time, and for the past few years has been trying to convince railway men that the Perry Side Bearing is the only frictionless side bearing on the market as proved by the thousands in continuous service for the past seven years.]

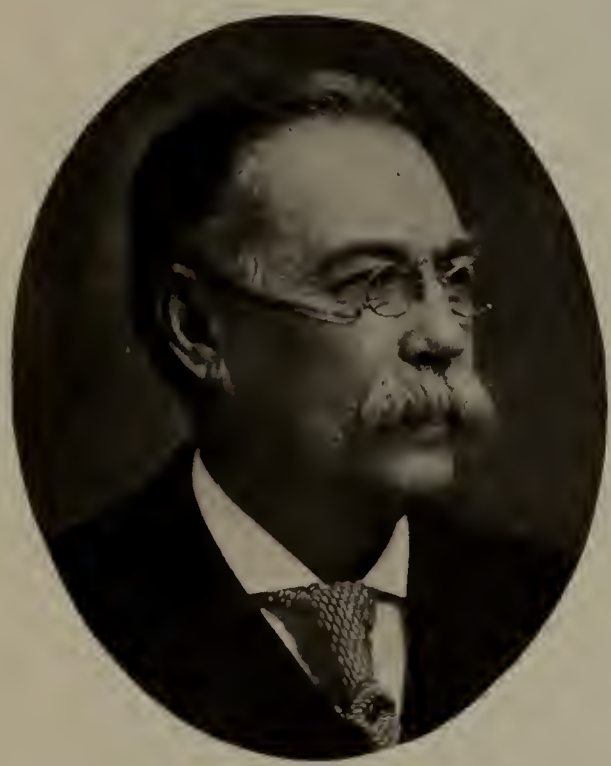

H. M. Perry.

A subject which may be of interest to the car builders of the present time is an account of my experience in helping to build my first box car. I have built many cars since that time, but never one that impressed me as this one did, both physically and mentally.

I commenced work as an apprentice in one of the old New England railroad shops, when the road was comparatively new, the car shop had no machinery of any kind, but as one of the cars had been destroyed by fire it was decided to build a new body, using the trucks from the destroyed car, and as this was the first car built in the shop I considered myself fortunate when I was detailed to help one of the shop men build this car.

The sills, plates and bolsters were ordered from a neighboring saw mill sawed to size, that is, within an inch or so, which was about as near as they ever sawed anything in those days, and the timber was all white oak.

The posts, braces and rafters, we sawed out of two inch oak plank by hand, the siding, lining and roofing, we sawed out of one inch pine boards, and planed, matched and beaded it by hand, the flooring was laid with dry oak plank two inches thick just as it was sawed, so it was no small undertaking to build even one car under these conditions, but labor was cheap; I think I received the munificent sum of seventy-five cents per day for mine, and the other man about one dollar and fifty cents, but I was getting the experience.

As there were no drawings, and I doubt if they would

have been of any use if there had been any, we laid out a rod from another car in the yard getting the location of the bolsters, cross ties, door posts, etc., and laid out the sills and plates, then followed the same plan for the end sills and bolsters and after several days' work framing these timbers we were ready to set up the floor frame.

The side sills, which were about four inches by seven, ran the whole length of the car, the end sills being mortised into them with double tenons, and secured by two three-quarter inch joint bolts at each end. The bolsters were seven inches by twelve inches and mortised into the side sills with two inch tenons and secured by two joint bolts in each end, the same as the end sills, so when the floor frame was set up, all that kept it from breaking in two at the bolster was the small area of timber left in the side sills at this point.

Between the bolsters three sills, or stringers as they were called at that time, were placed, one in the center and one on each side between the center and side sills, these were

When the draft gear was damaged the yoke was taken down, the king bolt taken out and the entire gear removed and another substituted, a stock of them being kept on hand for this purpose.

The side frame of the car, consisting of corner and door posts, side posts and braces, was similar to those now in use, only lighter, the corner posts being three by three inches, door posts three by four, side posts one and three-quarter by three, and braces one and three-quarter by six inches, with eight five-eighth inch rods on each side running from plates to sill.

The rafters were sawed out of two inch oak plank, cut on the arc of a circle, and were about three inches wide, the roof being laid with matched sheathing running lengthwise of the car, and covered with tin, the running board being secured to the roof by strips of tin soldered to the roof and nailed to the running board cleats.

The side doors had stiles and rails of oak framed together and secured by joint bolts, the panel being made

Under-Frame of Early Box Car.

gained down about three inches into the bolsters, at each end, and the under side supported on cast iron plates bolted to the bottom face of the bolsters, the ends of the sills and the bearings at the cross ties being gained down to the proper width.

Between the bolsters and end sills short sills were placed in line with the two intermediates, the front ends being mortised into the end sills and the back ends gained into the bolsters and supported on the under side by the same cast iron plates running across the bottom face of the bolsters, two three quarter inch rods run from end sill to bolster,

The cross ties were about three inches by ten set on edge and secured by one bolt through each sill.

The truss rod or strap was one half by two inch iron, a gib two inches long turned up on each end and mortised into the under side of the side sills, just in front of the bolster and secured by three three-quarter inch bolts. These straps were laid flat on the sill when bolted in place and the center sprung down over the cross ties, giving sufficient tension to make about two inch camber in the sills.

The draft gear was made of an oak plank three inches thick by twelve inches wide with two castings bolted to the under side, between which the followers and springs were placed. The springs were of rubber. On the top side of the plank a wrought iron strap one inch by three inches was bolted with a gib at one end mortised into the plank, the other end of the strap was enlarged to allow for a two inch hole through which the king bolt passed and secured the gear to the car, the front end being supported by a yoke, around the draw bar shank, which was bolted to the end sill.

of matched siding rabbeted into the back side of the door frame.

The trucks under this car had a square frame of one by three inch iron running around outside the wheels, to which the pedestals were bolted, a rubber spring being placed over the oil box in each pedestal.

The truck bolster was of oak, four by twelve inches and trussed with a flat strap similar to the side sills. It was secured to the truck frame by bolts through the frame and was provided with a center plate and roller side bearings, the side bearings being cast iron rollers three inches in diameter by two inches face and turning on two inch trunnions resting in a cast iron casing.

The wheels were cast iron, single plate, weighing about three hundred pounds each and the journals were three and one-quarter by five and one-half inch in length. The brake beams and heads were of oak and the brake heads framed on to the beams with a mortise and tenon and secured by a joint bolt. A wrought iron brake shoe was bolted to the head, the bolt heads being countersunk into the face of the brake shoes. Brakes were only applied to one truck, a brake lever being attached to one brake beam by a wrought iron jaw and the bottom connection rod running through the opposite beam and secured by a nut each side of the beam, the top connection rod running direct from the top of the brake lever to the brake chain and staff.

Comparison between this car, which was standard at that time, and one of today gives one a striking example of the progress made in car building in the past fifty years. This first car was twenty four feet long inside, seven feet six inches wide and six feet six inches high, having a total

capacity of about twelve hundred cubic feet, with a maximum load of twenty thousand pounds and weighed from eighteen to twenty thousand pounds, or about one pound of dead weight for each pound of load carried, while the standard car of today has from twenty four to twenty five hundred cubic feet of space with a maximum load of one hundred thousand pounds and weighs less than fifty thousand pounds or less than one half pound of dead weight for each pound of paying load.

It is not only the great difference in the weight and capacity of the two classes of cars that is remarkable, but when we take into account the fact that the old cars were run in trains of from twelve to twenty cars and at a rate of only eight to twelve miles an hour, while the cars of the present time are run in trains of from forty to eighty cars and at rates of speed from thirty to forty miles an hour, it is surprising that the enormous difference in strength required to perform this service has not resulted in a much greater increase in weight of the present equipment and demonstrates the fact that the car builders of the past have not been lacking in ability to keep abreast of the requirements of the service.

Economics of Tonnage Rating

By J. G. Van Zandt, C. E.

I. Introduction.

There has been considerable discussion regarding tonnage rating in the past and the subject will probably be a live proposition for many years to come. Changes in locomotive and car design, as well as in the method of operation, have made marked changes in the ratings during recent years. Formerly, the question was simply a matter of hauling what cars were ready, and the demands of commerce regulated the load of the locomotive. Growing demands, however, soon approached the limit of the capacity of the engine and it became necessary to designate a definite load as a maximum. The number of cars was used as a basis until it was found that there was so much difference between loaded and empty cars of different kinds; that the number of tons became the basis. It is probably true that both of these items should be considered. Just what the load should be for the mose economical operation is a complex question. The relative economy of running very slow "drag trains" loaded to a maximum, as compared with those of somewhat higher speed has been frequently discussed, and while it often becomes necessary for "time freights" to be operated at a higher speed for commercial reasons, it has been pointed out that, for "tonnage trains," there is a limit of economy in loading a locomotive. The consensus of opinion seems to indicate that from both a mechanical and operating standpoint, the *overloading of a locomotive does not pay.* Not only in the cost of maintenance and repairs to the locomotive, but also in other items, such as fuel consumption per unit ton mile, is there a saving effected by operating freight trains with less than a maximum load. Furthermore, delays due to draw-bar accidents and other lay-overs, which are more likely to occur in drag-train operation, have been expensive indications that overloading is not economical.

The indications from the great mass of data and discussion on this subject of tonnage rating seem to point to one conclusion, viz., that *there is a rating slightly less than the maximum which is the economic load for tonnage trains and which varies with the type of locomotive and the division over which it is operated.*

II. Comparative Cost of Fast and Slow Freight Service.

It has been often demonstrated that the cost per ton-mile for maximum trains and for those not loaded so heavily is nearly the same. Some of these are given below. It has also been observed by investigators in charge of tests that it was "quite possible to get one engine that was large enough to handle a bigger train than was practicable, as a transportation proposition, to move over the road."* It is the purpose of this article to demonstrate that the conclusions of practical experience indicate that there is economy in the long run, taking into account delays and other items usually omitted, in the practice of loading the locomotives somewhat under their maximum capacity. The speed is thus somewhat increased and the length of divisions can therefore be made somewhat longer without exceeding the legal 16-hour trip. "There is a limit to the length (of a division) in that freight trains may not be able to cover it in sufficient time so as not to exhaust the crews."** The trains are also more easily despatched and are not so unwieldly or uncertain at ruling points.

It was shown by Mr. W. B. Poland, superintendent of the B. & O. Southwestern R. R.,* that after a careful study of the cost of operation on part of that road, "for class 1500 engines, the most economical operation will be attained by trains . . . running 12½ miles per hour and hauling 91 per cent of maximum common rating. For 100 class engines, the greatest economy of operation will be attained by trains . . . running 14½ miles per hour and hauling 97 per cent of maximum common rating." These costs were obtained from records of about 500 trains with actual cost of wages, overtime, helper engine, fuel, repairs, oil, sand, interest on equipment, etc., and include only "those principal items which vary with, or are dependent upon, each trip."

Plate I shows the chart prepared by Mr. Poland in this study of costs and clearly indicates that there was a limit above which it is not economical to load a locomotive and that this limit was from 91 to 97 per cent of the maximum rating, depending upon the type of engine used. The conditions of operation vary widely with the different types of locomotives and the different profiles over which they may be operated, but the same general principle of economy holds true in all cases, viz., *that, if a careful study of each item of operation is made, a scientific rating can be made for each class of locomotive, which will effect the greatest economy.*

The practical question is, then, how can such a study be conducted to produce the most profitable results? A study of this kind resolves itself into two steps, viz.,

(1) Collection of Data.

(2) Co-ordination of Data and Derivation of Conclusions.

(1) Collection of Data.

Much depends upon the methods used in taking records of freight train operation, and probably some of the differences which have appeared in the conclusions of those who have investigated these matters are due to this fact. Many have sought for the desired information by the systematic method of using special test-trains with dynamometer cars and other special equipment. Others have used the somewhat less expensive method of making a careful study of the records of operation of trains in service. Both of these methods have their advantages and disadvantages. There are many advantages in the more complete and scientific method of test train records with special equipment. The special characteristics of the profile and locomotive in question can be determined with fewer tests and with more certainty, when other items which "service tests" might include are excluded. There is also an accumulation of data in the test train method, which, once obtained, can be used for many other problems in operation. In making special

*E. E. R. Tratman—N. Y. Railroad Club, Vol. 12, No. 6.

*Bulletin No. 56, American Ry. M. M. Assn.
**Henderson—Cost of Locomotive Operation, p. 160.

test-train records, however, conditions are not the same as in regular service. Locomotives are generally in better condition and handled more carefully and test-trains are generally abnormally uniform in character. While for scientific reasons all these conditions are desirable if the "maximum rating" is desired, it is probable that the results can not be considered as of quite the practical value that the same would be had the locomotives been taken directly in service with regular trains, and a general average secured from a large number of tests. It is probable, going to the other extreme, that the method of simply taking the records of time, fuel, etc. from the regular records as turned in, is not as satisfactory a foundation for a study of the economics of tonnage rating as might be desired because of the many practical difficulties encountered in securing the accurate data unaffected by the personal equation of the men engaged in the work. It is necessary to take a large number of service tests in order that the average values shall be indicative of the desired results. Even a large number may not be satisfactory if the method of taking the data is inaccurate. The actual fuel used on the trip, for example, may be very different from that indicated by the records, as the amount in the tender before and after the run may not be mentioned. The actual running time from which the average speed is desired, may also include certain stops or delays and hence seriously alter the record. It appears, therefore, that it is best to combine the two methods by taking a few road tests with a dynamometer car, and also by making a complete study of carefully collected service data. The function of the road tests would be to determine the train resistance over the division and the maximum tractive force of the locomotive and also such other data as to fuel, etc., which might be desired. The function of the study of service data would be to determine what reasonable "service ratio" should be applied to regular runs to effect the most economic operation.

(2) Co-ordination of Data and Derivation of Conclusions.

It has often happened that after a large quantity of valuable data has been collected, much of the value has been lost because of inaccurate co-ordination and compilation. Apparently worthless data may often become of much value when properly co-ordinated with the conditions under which they were taken. It is not the purpose of this article to discuss statistical methods, although there is a great need of better methods on the part of engineers interested in locomotive operation, but it is evident to those familiar with the facts that the study of the correlation of factors which vary dependently is not merely a plotting of points and then drawing a line of averages among them for a result. There are numerous definite statistical rules which not only require the exclusion of certain extreme values involving extraneous influences, but also include the recognition of the separate factors of the variation, and which in other ways contribute to the accuracy of the result. It may be said, however, that the "probable error of the mean" or the accuracy of the average value depends largely on the number of variates taken, and the care in compilation and co-ordination. Graphic methods are always desirable to check computations, but the "weight" or influence of values is not easily ascertained without proper mathematical consideration.

Mr. G. R. Henderson in "Locomotive Operation" points out that the fuel consumption is greatly influenced by the speed element. In an illustration he has shown that "the coal per ton mile will be greater by about 50 per cent for a 3,500 ton (freight train) than for one of 2,500 tons." There are, of course, other fixed charges which remain, in total, about the same for both trains and thus favor the large tonnage—but there are many other items often omitted such as increased repairs, delays, longer sidetracks and overtime, which, with this large item of fuel economy, overbalance the wages of crews—which does not always remain constant—and other "fixed charges" which favor maximum trains. Henderson shows that the total cost is higher at both extremely low and high speeds and shows a minimum between, which varies with the engine used and division over which it operates. In one illustration it is shown that the same minimum of $0.90 per 1,000 ton-miles may be obtained with a tonnage of from 900 to 1,200 tons. This is not taking into account the cost of delays and other items mentioned in this article which it is found place heavier costs on the higher tonnages and therefore favor the more reasonable loads. It appears necessary, therefore, that a special study be made of the locomotive division in question in order to decide what is the "economic tonnage rating." It is obvious that, as Henderson has said, "In order to make a careful study of any special case, diagrams should be made to suit the particular engine and conditions involved." There may be undulating profile conditions under which without even taking delays into account, the cost may be less for lighter trains. This was found true in a series of tests made recently by the author for establishing a fast freight tonnage rating. The following is an outline of the steps taken in the investigation:

(1) Actual road tests on the division.

(2) Accumulation of theoretical data and checking same by actual tests.

(3) Determination of the relation between coal and water consumption and speed.

(4) Determination of the relation between tonnage and speed.

(5) Determination of the cost of operation at various speeds.

Locomotive tests are not always representative of actual conditions and have been generally run on engines just out of the shops, with a special test-train and schedule. The results so obtained do not indicate service conditions, so, in this investigation, tests were made on service trains which were representative of actual service conditions.

The amount of coal used per 1,000 ton-miles and the pounds of water evaporated per pound of coal agreed closely with the results obtained in tests made by Mr. Garstang on the Cleveland, Cincinnati, Chicago & St. Louis Railway, and published in the proceedings of the Western Railway Club, 1901.

The relation between the coal consumed in the firebox and the speed of the train was determined in the following manner:

(1) An investigation into the waste of steam on account of radiation, safety valve, etc.

(2) A determination of the volume of steam required for operation under ordinary conditions, based upon indicator card tests.

(3) A computation of the quantity of coal necessary to produce the volume of steam required at various speeds.

It is evident that this determination gives a theoretical coal consumption based upon indicator card tests. Checks with the actual road tests and averages of coal consumed (from the reports of the chief engineer) show that it is not far from that found in actual practice. Indicator test cards were also available from the reports of the chief engineer, by the use of which the volume of steam required at different speeds could be determined. For amount of coal required to evaporate the water used, the work of Professor Goss and Mr. Garstang at Purdue University was taken as a basis of comparison, the average being about 6 lbs. of water per pound of coal. Results were plotted (Plate II) and show clearly how coal consumption varies with the speed, the greatest economy being attained at the speed of about 33 miles per hour. A point of special interest in this

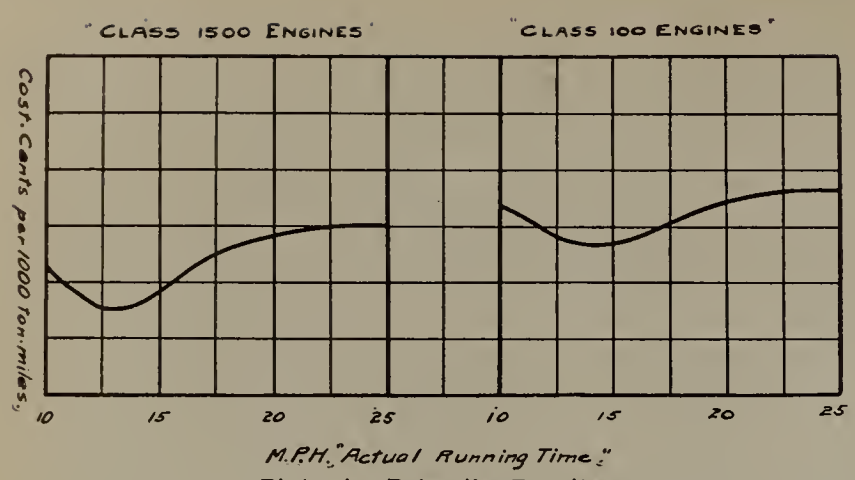

Plate I.—Poland's Results.

curve is that it shows the consumption of coal of the different classes of locomotives to vary in the same way, the points being intermingled along the same curve; which was checked by road tests. The first check was made by selecting those parts of the speed records in which tonnages were somewhat uniform for all the tests, and plotting below them the curve of actual coal consumption per mile. This gives a good check and shows that theoretical deductions based on the indicator cards taken were not far from the actual conditions. In order that a fair comparison could be made of the costs of operation at various speeds, the cost was considered on the "ton-mile" basis. To do this the necessary relation was determined between the tons hauled and the average speed by plotting a curve of arbitrary stops from the dispatcher's records. It was simply necessary to add the stopping time at a given tonnage, to the running time previously found for the same tonnage. This sum divided into the total miles gave the average speed.

The costs on the test being described were figured on a unit of 1,000 ton-miles, only those items being considered which would be likely to vary with tons hauled and the speed, a summary of the results being given in Table I.

Table I.—Summary—Table of Costs.

1. Average speed between terminals	10	15	20	25
2. Weight of train, back of tender	1,620	1,550	1,070	700
3. Actual time, hours between terminals	14.47	9.65	7.25	5.80
4. Coal burned, lbs. per mile	375	238	168	125
5. Coal burned, lbs. per 1,000 ton-miles	231	153.5	157	179
6. Water used, gallons per mile	215.5	154	104	85
7. Water used, gals. per 1,000 ton-miles	133	99.5	97	121
Cost per 1,000 Ton-Miles.				
8. Cost of coal burned	.243	.161	.165	.188
9. Cost of water used	.0133	.0099	.0097	.0121
10. Cost of repairs	.145	.159	.168	.196
11. Pay of enginemen	.047	.050	.072	.111
12. Interest allowance	.0107	.0103	.0117	.0145
13. Cost of car repairs	.150	.150	.150	.150
14. Pay of trainmen	.0567	.0593	.0860	.1310
15. Total cost	.6657	.5995	.6624	.8026

The cost of coal on this division was $2.10 per ton (average) and the cost of water was assumed at 10 cents per 1,000 gallons, as given by Henderson, although it was perhaps high for this road, on which, however no actual data was obtainable. The costs of locomotive and car repairs were taken from Henderson's determinations as being 15 cents per 1,000 ton-miles. The pay of engineers and firemen is based on a schedule of 100 miles or less, or 10 hours or less per day. The interest allowance was also assumed as figured by Henderson and amounted to $2.50 per day, or practically 10 cents per hour. In line 15 the sum of the different columns is shown and represents the comparative costs of operating, per 1,000 ton-miles. Plate III shows the economical speed for freight trains on this division is somewhere near 15 miles per hour. The curve also shows clearly how the cost increases both at the slower and at the faster speeds.

The results in this table do not, it must be remembered, represent the total operating charge per 1,000 ton miles, which would probably be a great deal more. The results are of interest in view of the fact that at the time most of the trains were made up on this division on the basis of 10 miles per hour, whereas it appears from these computations that an average speed of 15 miles per hour would result in a decided saving.

III. Train Resistance.

Perhaps there is no item which is more vitally connected with the economics of tonnage rating than train resistance. Unfortunately the results of the many investigations of this important factor appear to differ so widely that there is much difference of opinion in regard to the matter. In general it may be said that these differences can usually be assigned to the unlike conditions under which the tests were made and to the inadequate co-ordination of all the factors involved. It would be perfectly evident that a locomotive hauling passenger cars on a perfectly maintained track would have a different resistance to overcome per ton of train than one hauling old freight cars over a rough track. Yet many of the "train resistance formulas" have been fabricated under even more widely divergent circumstances than these, with the inevitable result that the conclusions do not agree. It is probable, however, that with due regard for all these factors it can be shown that there is comparatively little difference between the actual results of these tests which have been made. When the values obtained from tests actually cover a diagram, it is evident that there must be other items influencing the variation than the speed, and in order to determine what these items are, and how much they influence the values, a careful analysis must be made. The factors which go to make up the resistance of cars in a moving train are many and difficult of determination. In general they may be classified as follows:

1. Acceleration.
2. Grade.
3. Friction; divided as follows:
   (a) Journal friction.
   (b) Rolling friction.
   (c) Flange friction.
   (d) Air friction.

There is such an accumulation of data upon each of the several items above mentioned and careful investigations differ so widely in their conclusions, it is evident that one would not be justified in making extended investigations for minute discriminations. Each factor was therefore investigated, in the case used as an example, in so far as that investigation promised to be fruitful of information of value.

(1) Acceleration.—The figures given by Wellington were adopted in the computations as an average representing a fairly well selected value for ordinary conditions.

(2) Grade.—Grade resistance in pounds per ton is equal to 20 times the rate of grade in percent, this being an accepted rule credited to Wellington.

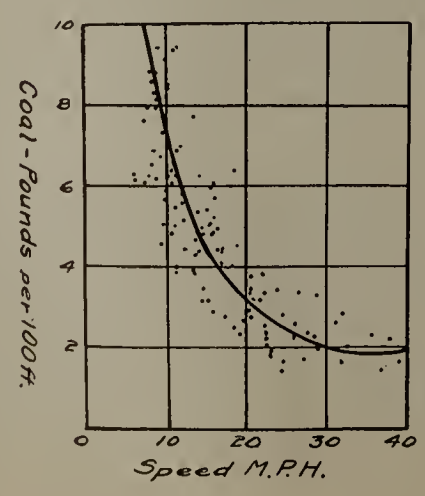

Plate II.—Coal Consumption.

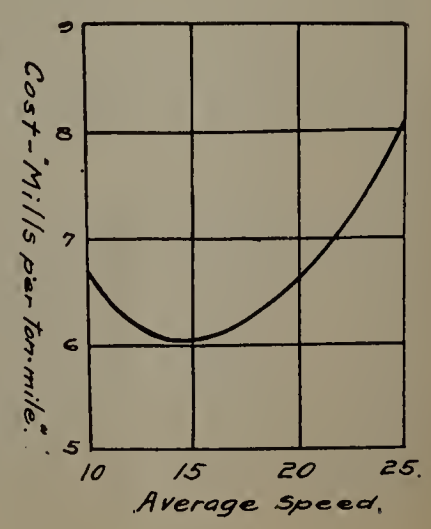

Plate III.—Variation of Costs.

(3) Friction.—(a) Journal friction depends upon the design of the journals and lubrication, and varies with the number of journals and the pressure upon them. *Speed does not materially affect this factor AFTER it reaches that value at which a continuous film of oil is kept running between the surfaces in contact.*

(b) Rolling friction is the friction caused by the wheels in contact with the rails as if there were no flanges. It is generally conceded to be due to a peculiar wave in the rail just in front of the wheel as it depresses the track with its weight; this friction therefore would vary as the weight upon the wheels and the conditions of the roadbed. The size and shape of the rail and the size of the wheel would also affect this factor, together with other minor influences, such as line, surface, snow and dirt.

(c) The term "flange friction" denotes all other resistances between the wheel and the rail not included in rolling resistances. On level tangent this factor is largely dependent on design of the rail and flanges.

(d) Air friction. Besides increasing the flange resistance (as when a wind is blowing against the side of a train) the friction of the air against the sides and the suction at the back of the cars would increase the total resistance somewhat.

For miscellaneous factors seemingly impossible of determination the term "oscillation and concussion" is used. The hundred or more train resistance formulas may be arranged into four general forms, all of which deal only with frictional resistances, constants being used for journal friction and for the remaining resistance; sometimes exclusive of wind friction which is given as a separate factor varying as the square of the speed. A very few formulas take into consideration the size of the train, but even these do not mention the size of the car bodies or wheels, or the number of wheels to the car.

That these items might reasonably be expected to influence the resistance is evident. Rolling stock has been constantly changing in weight and other dimensions, during the years producing train resistance formulas. The practice of simply plotting the train resistance values against the speed, as if

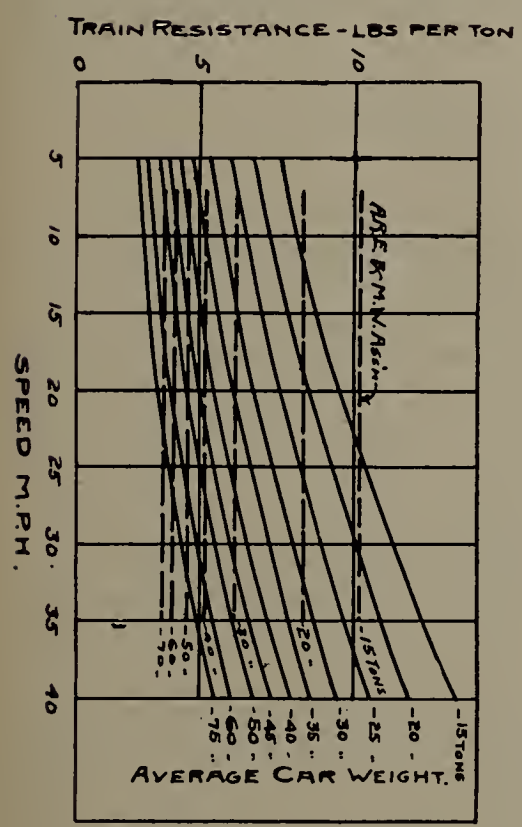

Plate IV.—Train Resistance.

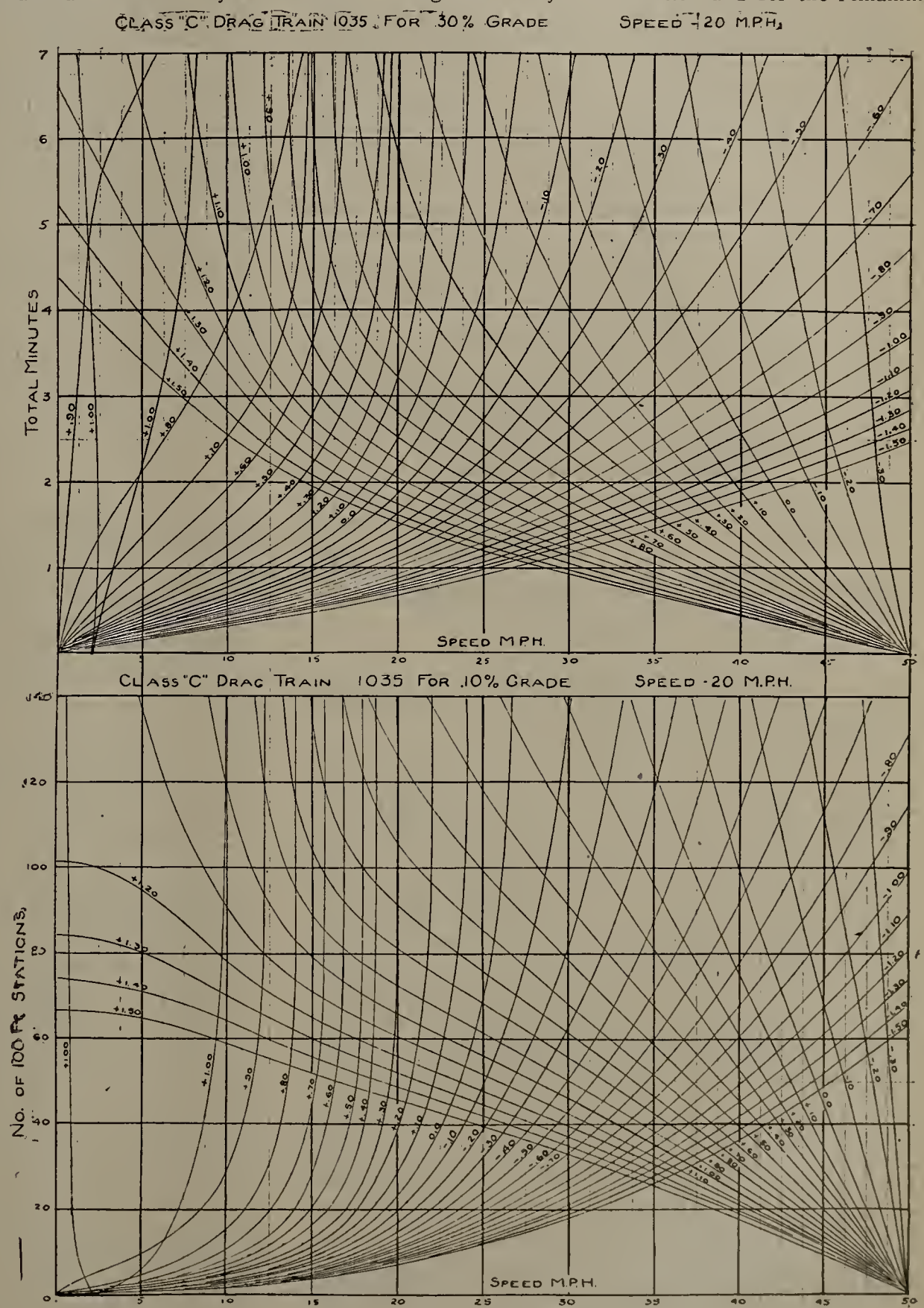

Plate IX.—Operation Chart.

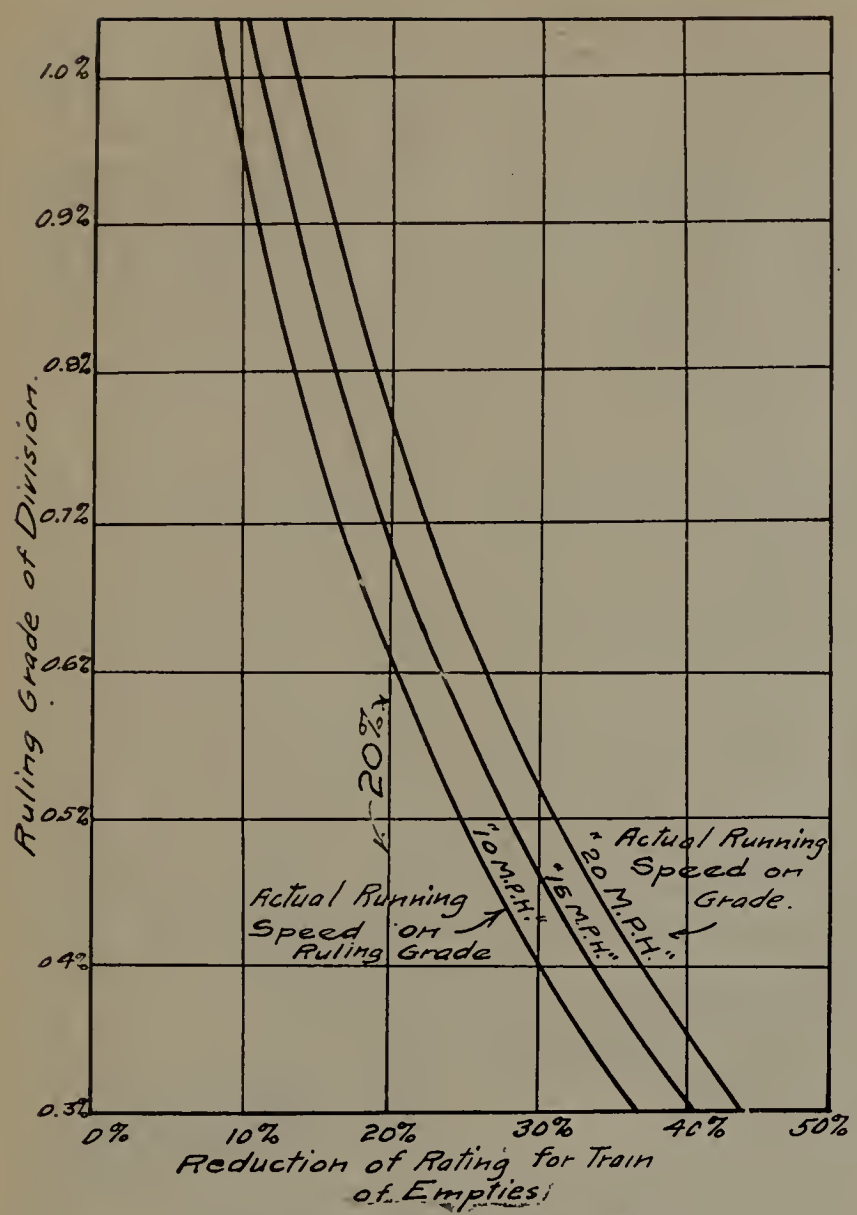

Plate V.—Allowance for Empties.

that was the only factor influencing the variation, is unreasonable in the light of these other changing factors.

Among other factors doubtless an important influence would be the varying weight of the trains and the number of wheels carrying the weight. To determine the amount of this influence a number of test records made at or near the speed of 10 miles per hour were selected and studied in obtaining the results herein given. The values obtained were then correlated with the corresponding values of the weight of the train divided by the number of wheels carrying the load, the results proving that for these tests of especially uniform character the correlation was 45 per cent. For heterogeneous conditions the increasing number of other factors would reduce this figure correspondingly, but the fact is apparent that of the 55 per cent remaining influence in the variation, the weight upon the "wheel units" is an important factor. It is obvious that all those factors which are derived from the contact of the rails with the wheel will vary with the number of wheels. From a study of all that has been done to determine this factor it may be stated that, generally speaking, the journal friction will vary directly as the number of wheels.

There is evidence that the rolling resistance in pounds per ton is not increased when a truck contains six wheels instead of four. The rolling resistance caused by the elastic wave in front of the wheels is materially less for two trucks of six than for three trucks of four wheels each, since the wave made by the first wheel affects the second only slightly, and hence two instead of three waves will be made. The rolling resistance would reasonably vary inversely as the number of wheels in the truck.

Under normal conditions on a straight level track flange friction is, no doubt, much less in two six-wheel trucks, since the alignment and rigidity favor reduced friction. The same might be said of oscillation, concussion and other miscellaneous friction factors. On curves the resistance will also be much less, for the number of flanges cutting the rail will be less. Taking a general view of the matter it may be stated that rail resistance varies in pounds per ton inversely as the number of wheels carrying the load.

Applying these two principles in a preliminary way to two of the most famous and well established formulas for train resistance, a reconciliation is found that shows that both may be right. They were both derived from experiments made on a good track, under practically the same circumstances, and while ranges of speed were not wide, they have been extended experimentally and substantially checked throughout. It has been stated that there were 5,000 experiments made from which the present "Baldwin Locomotive" formula was derived, the records unfortunately not having been preserved. These experiments, however, were made on 12-wheel high-speed passenger cars. The formula is usually written as follows:

$$R = 3 + \frac{V}{6}$$

Adjusting this for 8-wheel freight cars, the first factor is reduced by the ratio of 12 to 8 and the second increased by the same ratio, hence it becomes,

$$R = 2 + \frac{V}{4}$$

which is the celebrated "Engineering News" formula.

Numerous charges have been made that these formulas are based upon figures derived from tests on track, "some of which are the best in the world," and do not represent ordinary practice; these charges have not been justified by later experiments. In fact, later formulas give even lower values and the evidence that these are too low grows less as improved rolling stock and better road conditions are more common. The older the formula, generally speaking, the higher the values obtained by its use.

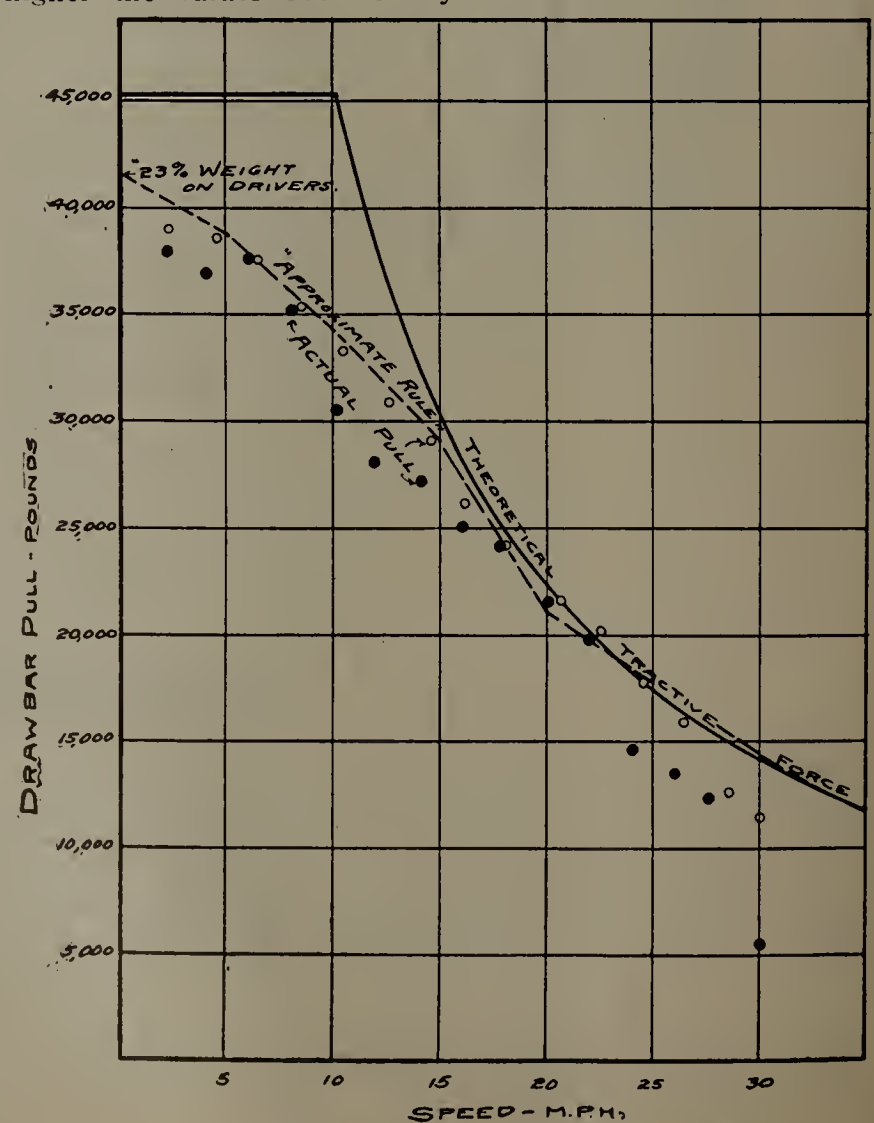

Plate VI.—Tractive Force.

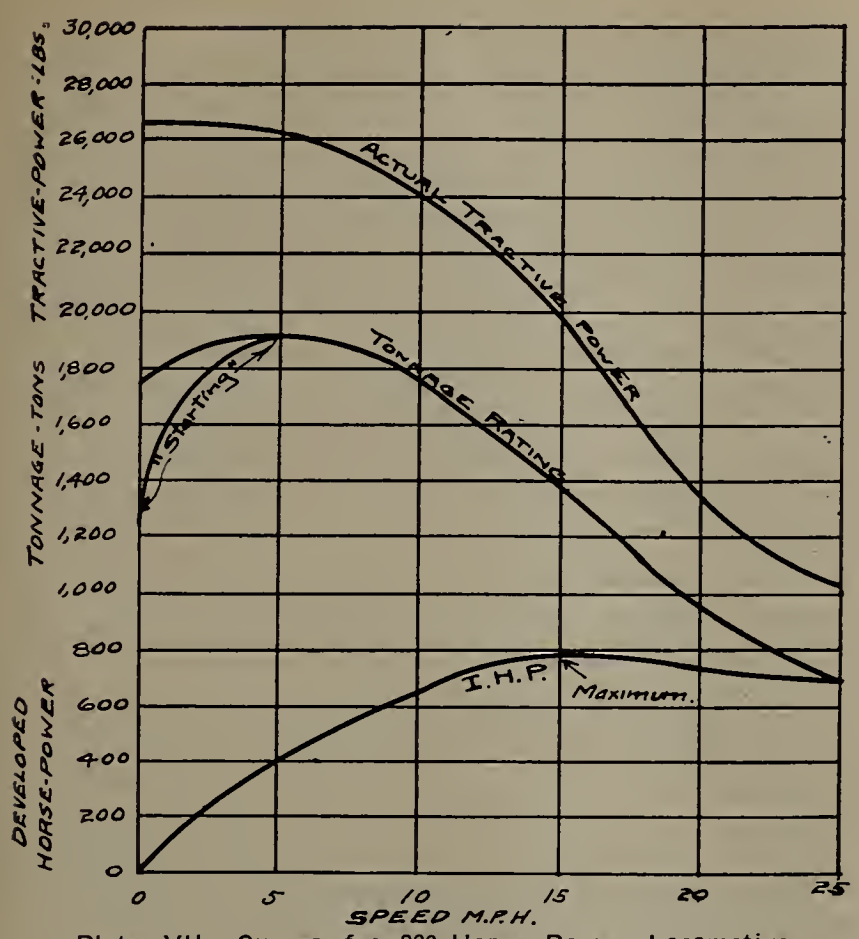

Plate VII.—Curves for 800-Horse Power Locomotive.

Considering this practical reconciliation the "wheel unit" of the type of freight car in use would present a practical basis. A number of references have been made to the importance of this wheel unit, Mr. Delano stating that, "the number of wheels and the length of the train are important factors," in train resistance. It might be possible to reduce all present formulas, as in the above case, to the freight car unit, or even to the basis of the number of wheels and the weight on them.

A most valuable contribution to this subject has recently been made by Prof. E. C. Schmidt, in Bulletin No. 43 of the Illinois University Engineering Experiment Station. The relation of "average car weight" to train resistance is very clearly indicated by the tests. Plate IV is a diagram showing these relations and indicates that as the weight increases not only does the resistance in pounds per ton decrease, but the effect of the speed is very much less. The careful methods employed in the development of these curves should commend them to a wide acceptance. One thing is certain, and that is that there is a general inclination of the curves giving an increased value for higher speeds. The results of Mr. A. C. Dennis and the conclusions of the American Railway Engineering and Maintenance of Way Association (Bulletin No. 120) which were influnced by his conclusions, are also indicated on Plate II in broken lines showing no change "between 7 and 35 miles per hour". There are so many factors in train resistance which individually do increase with the speed, it appears logical that the sum total would be influenced to do likewise. One reason why many experiments with test cars have not evidenced this fact is that most of the records for low speeds were taken at or near the start of the tests when conditions were not normal. It is a known fact that it takes some time for the bearings to get "warmed up" and well lubricated, and that records taken before these conditions have been attained will invariably give higher values at lower speeds—which would in time make the curves appear more nearly level. It may be pertinent to suggest that this peculiar characteristic of train resistance makes it especially desirable that freight trains should be kept in motion in order to effect economy of operation, and not stopped frequently as is the common practice. Of course, this is a matter of operation which cannot be easily solved, but it appears that since the actual number of foot-pounds of energy necessary to move a train can be reduced so considerably by the simple process of avoiding long delays which permit the train to become "froze", that it should receive more careful attention. Possibly this may be one of the principal reasons why the faster freight trains can be run more economically than those of maximum tonnage. As an example, suppose it requires twice as much power to pull a freight train over the first mile (since the tests indicate that it may) on account of being delayed long enough to become "froze". Then the extra cost of hauling that train that one mile would be correspondingly greater because of the increased demand upon the locomotive, which means increased fuel consumption and possibly stalling, with resultant delays, overtime, and repairs. It is evident that there is a saving of considerable amount if after the train is once in motion it may not be required to stop long enough at any point to increase the resistance materially. It was found by the examination of a series of service records on fast and slow freights, that the delays, including regular stops for coal and water, passing other trains and drawbar pull-outs, breakdowns, etc., for "tonnage trains" increased the time from 3 hrs. to 7 hrs. on each run, with an average of nearly 5 hours, whereas for the faster trains the "total delays" ranged from 1¼ hrs. to 2½ hrs., with an average of only 2 hours and 20 minutes.

It appears from all the present data on the subject that the results of the long series of careful tests made by the test car of the University of Illinois Engineering Experiment Station are the most reliable, and these have therefore been adopted in this study.

Empties.

An allowance for empties must be made for it is well known that "empties pull harder than loads"—a practical acknowledgment in the extreme cases that train resistance

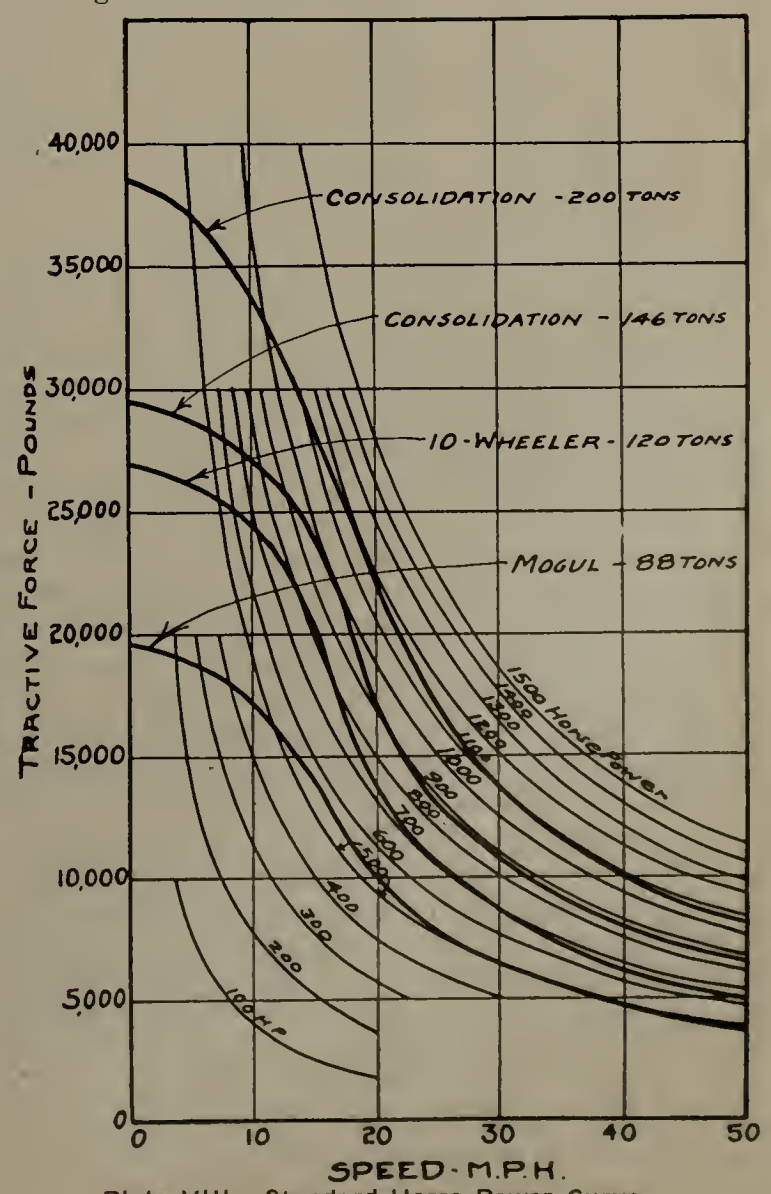

Plate VIII.—Standard Horse Power Curve.

is affected by the average weight of the cars. The term "empty" is only comparatively indicative of the weight of a car. Development in car building has been so rapid in recent years that many of our modern "empties" weigh as much as the full "loads" of former years. Referring to the chart of Plate IV assuming 16 tons for empties and 50 tons for loads, the resistance on level track at 10 miles per hour would appear to be about 8 lbs. per ton for empties and 4 lbs. per ton for loads, a difference of 50 per cent. Of course, the effect is not so great on grades since this difference is a smaller per cent of the total resistance. Assuming 20 lbs. per ton per 1 per cent of grade the total effect upon an empty on a 1 per cent grade is 20+8 or 28 lbs. per ton, and for a load on a 1 per cent grade is 20+4 or 24 lbs. per ton, or a difference of 14.3 per cent instead of 50 per cent. Table II shows the effect for other grades and the allowance may be made by reducing the regular rating the per cent given for the ruling grade of the division to allow for increased resistance of empty cars. The Santa Fe, as shown in its

TABLE II.

Allowance for Empties on Grades.

Ave. empty = 16 tons, Ave. load = 50 tons at 10 M. P. H.

Grade.	Lbs. per ton R. of Empties.	Lbs. per ton R. of Load	Diff.	Diff. in per cent of Load.
0.0	8	4	4	50 %
0.1	10	6	4	40
0.2	12	8	4	33.3
0.3	14	10	4	28.6
0.4	16	12	4	25
0.5	18	14	4	22.1
0.6	20	16	4	20
0.7	22	18	4	18.2
0.8	24	20	4	16.6
0.9	26	22	4	15.4
1.0	28	24	4	14.3
1.5	38	34	4	10.5
2.0	48	44	4	8.3

tonnage booklet, allows about 14 per cent for very heavy trains. The C., B. & Q. uses 23 per cent, which is the same as that employed on the Montana division of the Northern Pacific. From an investigation made by the American Railway Master Mechanics' Association it was found that two roads use 25 per cent, several 20 per cent, three 10 per cent and one 8 per cent for empty cars. Mr. Haas, in the Railroad Gazette, Vol. 27, 1895, p. 129, presents a method for determining this reduction by experiment and his illustration gives a deduction of about 24 per cent. The difficulties lie in the weights of cars and condition of track. The rotative energy, moreover, of the wheels in the train of empties is 4 or 5 per cent higher than for loads, owing to the increased number of wheels per ton weight. This would probably reduce the higher values and gives a slight benefit to empty trains in making a "run for a hill" in that there is more momentum per ton of train due to the larger per cent of wheels per ton containing rotative energy. Without having the data regarding the grades or speeds used in the above cases it is not possible to ascertain their bearing as a check on these computations. They do indicate a tendency to make allowance of about 20 per cent, which is the value here found for a 0.6 per cent grade and a speed of 10 m. p. h., with average weights of empties at 16 tons and loads at 50 tons. It is probable that the following items should always be considered in making allowance for empties:

(1) Average weight of cars.

(2) Ruling grade of division or "virtual grade."

(3) Speed desired on that grade.

For fast trains this allowance for lighter cars should not be quite the same since the ratio of resistance is not constant. The allowance for trains maintaining speeds above 10 m. p. h. on ruling grades may be found in the same manner using the values for train resistance for those speeds. Plate V shows the values of these factors for speeds of 10, 15 and 20 m. p. h. on ruling grades from .3 to 1.0 per cent. It can be clearly seen by reference to this diagram that for a given ruling grade of 0.6 per cent and for a train running at 10 m. p. h. on this grade the allowance for empties would be about 20 per cent, or one-fifth. A simple application of this conclusion has been effected by the following note put below the "tonnage table":

"For empties deduct one-fifth of the above rating."

Example: What is the rating for Train No. 28 with Engine No. 248, all empties?

From the above table, rating for loads is found in the last column, next to bottom line to be.....1,345
Deduct one-fifth 269

Balance empties .....1,076 tons

Again: Train No. 22, Engine No. 172 has 915 tons of load. How many tons of empties will fill out the rating?

		Tons
From the table the rating for loads is.....	1,865	
Load on	915	915
Balance	950	
Deduct one-fifth	190	
Balance empties	760	760
Total tonnage is.....		1,675

This method has been found to be satisfactory and has the advantage over "distribution tables" that it is more exact and more easily used. Any trainman can understand its workings and it is so simple that after it has been used a few times the adjustment for empties can be made mentally.

A Method of Adjusting Tonnage Rating for Partially Loaded Cars.

Derivation of formulas—

Let A = Tons on train.
B = Number of cars on train.
C = Rating to be filled out in train.
X = Equivalent number of loads, at 45 tons average.
Y = Equivalent number of empties at 15 tons average.

$45X + 15Y = A$

$X + Y = B$

Combining, $X = \frac{A - 15B}{30}$ = Number of loads on train.

$Y = B - X$ = Number equivalent empties on train.

Deduction (assuming 20 per cent for empties):

(1) $\frac{(C - 45X)\ .80}{15}$ = Number of empties to fill out rating.

(2) $\frac{C - 45X}{45}$ = Number of loads to fill out rating.

Now, if partially loaded cars are to be added, the per cent of "equivalent empties" $= 45 - \frac{\text{(Average weight of all cars)}}{30}$

Average weight of cars in train or to be put in train is a measure of the per cent of equivalent empties, in a corresponding train of loads or empties only.

Table III.

Average weight	Per cent "Equiv. empties"	Per cent Rating is reduced	Average weight	Per cent "Equiv. empties"	Per cent Rating is reduced
45 tons	....	....	29 tons	53.3	10.7
44 "	3.3	0.7	28 "	56.4	11.3
43 "	6.7	1.3	27 "	60.0	12.0
42 "	10.0	2.0	26 "	63.0	12.7
41 "	13.3	2.7	25 "	66.7	13.3
40 "	16.7	3.3	24 "	70.0	14.0
39 "	20.0	4.0	23 "	73.3	14.7
38 "	23.3	4.7	22 "	76.7	15.3
37 "	26.7	5.3	21 "	80.0	16.0
36 "	30.0	6.0	20 "	83.3	16.7
35 "	33.3	6.7	19 "	86.7	17.3
34 "	36.7	7.3	18 "	90.0	18.0
33 "	40.0	8.0	17 "	93.3	18.7
32 "	43.3	8.7	16 "	96.7	19.3
31 "	46.7	9.3	15 "	100.0	20.0
30 "	50.0	10.0			

Rule:

(1) Divide tonnage on train by number of cars.

(2) Increase tonnage on train by per cent in column 3, Table III [that is, multiply tonnage (on train) by that per cent and add result to tonnage on train].

(3) Subtract result thus obtained from tonnage rating and reduce that by same per cent if cars to be added have same average weight, or, if not, by the correct per cent for them.

(4) This result is tonnage to be added.

Example:

Given:

A = 1,000 tons, B = 25 cars; now on train.

C = 1,540 rating for division.

Required: How many cars at average weight, 37 tons, can be taken.

(1) $\frac{1,000}{25}$ = 40 tons average in train, or 16.7 per cent equivalent empties (Column 2, Table III).

(2) 1,000 + (3.3 per cent 1,000) = 1,000
+ 33
1,033 tons.
(Column 3, Table III.)

(3) 1,540 — 1,033 = 507 tons balance, to be reduced 5.3 per cent. (Column 3, at 37 tons average weight.)

$.947 \times 507 = 480.$

(4) 480 tons or $\frac{480}{37}$ = 13 more cars.—Answer.

IV. Tractive Force.

The conclusions of the Committee on Economics of Railway Location of the American Railway Engineering and Maintenance of Way Association, given in Bulletin No. 120 on tractive force, have received unanimous approval in the recommendation that the "actual drawbar pull" as determined by test car records should be used. The methods suggested for calculating the tractive power, in case it is not known by actual test, have not met with as hearty approval largely because of the wide differences of opinion as to the constants and friction factors employed, together with the omission of some factors which it has appeared should be considered. It is probable that no formula or simple computation method can be made to meet all the variable quantities involved. It is known, for example, that differences in kind of fuel, water, and lubrication, also in the setting of valves and adjustment of draft in front-end, not to mention efficient firing and operation or general condition of repair, have marked influence upon the tractive power of the locomotive. It seems desirable, however, that some approximate method be available for rough computations and probably that proposed is as good as any. However, the labor involved in the use of the method does not appear justified in the approximate results obtained. A report of the Association of Transportation and Car Accounting officers (Circular No. 83) uses the tractive power as constant for all speeds from zero to twenty miles per hour! The result, of course, shows a "possible gross tonnage" for trains making an average speed of 20 miles per hour much greater than for the lower speeds. For approximate computations of this nature *where the actual tractive power is unknown* the following simple method is suggested:

Speed Miles per Hour	Tractive power in per cent of weight on drivers. (Simple freight locomotive designed for low speed.)
0	23% (30% for starting with sand)
5	21
10	19
15	15½
20	12
25	10
30	8
35	7½
40	7
45	6½
50	6

The speed, however, should best be put in terms of "revolutions per minute" or "piston feet." Probably many of the extreme values suggested have been due to unreasonable coordination of this data.

Most computations of tractive power are based on the fundamental formula of "work done" or

$$T.F. \times D = 4\ M.E.P. \frac{d^2 s}{4}$$

from which $T.F. = \frac{M.E.P.\ d^2 s}{D}$

The voluminous tables of the American Locomotive Company are based on this formula, using 85 per cent of boiler pressure as "M. E. P." It appears from numerous tests that at starting about 90 per cent B. P. may be used. If this exceeds 23 per cent of the weight on drivers, sand may be used, but 30 per cent adhesion is the maximum which may be expected even with sand. In order to discover the point at which speed becomes the controlling factor the evaporating power of the boiler must be computed and equated to the speed requiring an equal volume (corrected for pressure) in the cylinders. This speed usually falls at about 10 M. P. H., depending upon the design of locomotive. For speeds above this point the larger cut-off must be employed, and the tractive-force reduced accordingly. Many theoretical curves have been devised for this, but it appears that if the test car results are not obtainable the computations should be based upon indicator card tests. The "M. E. P." thus found may be considered as acting directly upon the drivers, though the friction of the locomotive must be subtracted. It is also evident that the tangential tractive force is reduced because of the mechanical construction of the leverage.

Taking the work done again, for both sides per revolution, we have:

$$2 \times 4\ M.E.P. \times stroke = 2 \times 2\pi \times stroke \times F \text{ or}$$
$$F = .6366\ M.E.P.$$

where "F" is the tangential force on crank pins. But the tractive force "T. F." at the rim of the drivers is proportionately reduced thus:

$$T.F. \times \tfrac{1}{2}D = F \times stroke \text{ or } T.F. = \frac{.6366\ M.E.P. \times stroke}{\tfrac{1}{2}\text{ diameter of drivers}}$$

Of course the force in the piston is not a constant "M. E. P.," nor is the connecting rod in a position to give maximum thrust when the pressure is highest. Henderson gives an

analysis of the action showing a wave-like action with some decided points of maximum ability. The length of connecting rod and proportion to stroke influence this action considerably. When this ratio is one to five the action in the forward half has 58 per cent of the total thrust of one-half revolution. The resistance of the locomotive and tender as well as their momentum should not be forgotten in considering tractice force by computation methods.

Five values for the tractive power of the locomotives selected have been worked out in parallel for comparison, the method employed being as follows:

(1) $T. F. = P_1 C_1 - R_1$

$P_1 =$ M. E. P. from tests above made and described.

$C_1 = \frac{d^2 s}{D}$ a constant for each locomotive. $R_1 =$ the internal resistance from Prof. Goss' formula: $R_1 = 3.8\ C_1$.

(2) $T. F. = P_2 C_1 - R_2$.

$P_2 =$ M. E. P. from tests above made, less 8.5 per cent for friction as recommended by Henderson.

$R_2 = 0$ as the resistance is taken care of in the $P_2 C_1$ is the same as in the first case.

(3) $T. F. = P_1 C_1 - R_3$

$R_3 =$ Internal resistance taken from Henderson's formula $R_3 = 15V + C$.

The other quantities are as above stated.

(4) $T. F. = P_1 C_1 - R_4$.

$R_4 =$ Resistance of the machinery internal in the engine as determined by the "St. Louis tests."

(5) $T. F. = P_3 C_2$.

$P_3 =$ Available force taken from Henderson.

$C_2 =$ The "tangential factor."

On Plate VI is shown a typical comparison of the formula and test-car method. It appears that in service the theoretical tractive force for low speeds can hardly be expected. Further, since this is true, it is evident that the locomotive can produce more horsepower at about 15 miles per hour and thus also more ton-miles per hour. The factors are clearly indicated on Plate VII, in which the tractive force, tonnage rating and corresponding horsepower curves are shown. If a locomotive could produce the same horsepower at lower speeds the values would be much in excess of what they are found to be. This is evidenced by Plate VIII, on which "standard horsepower curves" are constructed, being simply "33,000 foot-pounds per minute" reduced to miles per hour and plotted. On this the tractive power of the locomotives have also been plotted and the result is that it is clear that the locomotives do not produce maximum tractive force until reaching a speed of about 15 miles per hour, above which it begins to reduce again slightly. It is the purpose of these figures to demonstrate the principle that tractive force is not a constant, nor a variable of regular variability, but that the curves are convex upwards until a speed of about 15 m. p. h. is reached and then become tangent to a curve of opposite flexure following approximately the cubical parabolas of the "standard H. P. curves."

V. Practical Rating.

Tonnage rating is not simply a matter of taking a maximum tractive power at a very low speed and dividing that by an arbitrary train-resistance constant. It is a science, and *adjustments for speed and temperature should be made after a careful study* with the full possession of data taken over the division in question upon the locomotives in question. It is finally established that there are too many factors entering into the making of a tonnage rating to use general averages as at all applicable for this important matter in economic operation and it is evident that there is a preventable loss where operation is based upon the old principle of "any old rating will do." Plate IX shows the "scientific operation chart" which indicates what speed the given locomotive can make with the given load, based on the careful study of all the factors mentioned above. A series of these charts were made and applied to the profile of the division in question and from these the ratings were established for the locomotives in use "to make the time required." The following is a sample of the tonnage table used:

Table IV.

Effective October 15, 1907.

Locomotive Nos.	Tonnage Trains North	Tonnage Trains South	Time freight tonnage Train numbers No. 21	No. 22	No. 23	No. 24	No. 27	No. 28
108-128	1,069	1,443	969	1,141	954	1,258	669	873
211-220	1,090	1,474	977	1,172	962	1,282	684	882
257-266	1,130	1,535	983	1,204	963	1,334	698	899
227-230	1,329	1,795	1,094	1,377	1,076	1,517	831	1,047
221-226	1,466	1,976	1,202	1,542	1,182	1,687	932	1,157
160-176	1,615	2,179	1,456	1,865	1,421	1,877	1,061	1,349
247-256	1,622	2,183	1,458	1,855	1,398	1,875	1,058	1,345
242-246	1,636	2,196	1,471	1,867	1,411	1,887	1,071	1,357

VI. Conclusions.

The adjustment of tonnage means a "stopping of leaks" where most needed. It reduces the big leaks in the coal pile, it reduces the high cost of repairs on both cars and locomotives, and most all it *produces* a spirit of satisfaction on the part of the engineers, who know they are not being required to perform a physical impossibility—namely, to haul maximum trains with engines not in first-class repair. The adjustments for temperature as recommended in the Bulletin No. 120 above referred to probably represent average conditions, but should be modified for any particular road by special tests and experience in operation. The reductions of tonnage for speed should also receive a scientific study and careful "service tests" should be made for the purpose. There have been found to be many "stock train" tonnages which were much lower than was necessary for the desired increase in speed.

Finally, since in the last analysis "the proof of the pudding is in the eating," it is interesting to note that after three years of operation on a "scientific basis" a superintendent of one of the roads entering Chicago has made the following statement in connection with the tests used herein as an example: "It has been a great improvement over the old rating and has been working out very nicely." Railroad men are not given to handing out bouquets promiscuously and it appears probable that there must be a reason for the success of the scientific tonnage rating.

THE COAL PROBLEM.

By A. Bement.

(*Continued from page 190, May issue.*)

Features Over Which the Coal Producer Has No Control.

(1) Moisture content, (2) heat value, (3) fixed carbon, (4) volatile matter, (5) sulphur, (6) evaporative performance secured in use of the fuel, (7) amount of smoke that may be produced, (8) suitability.

Referring to these features in detail, the moisture content, for example, is a constant of the coal seam and is the result of natural processes, extending over ages, during the time the coal was formed. The coal miner cannot afford to dry the coal by artificial means before shipment, neither would it be profitable as a general practice to add water to it, thus moisture is constant until changed by weather conditions or time in transit. The heat value, fixed carbon, volatile matter and sulphur are likewise constants of the coal which cannot be changed. For illustration, it would be impracticable for a coal producer to make a change in the sulphur content. There is no method by which it may be reduced and it would not be profitable to add sulphur as an adulterant because it costs very much more than coal.

If a purchaser or consumer should demand coal from a pre-

scribed locality, specifying heat value of the fuel mixture, and the heat value of the coal delivered did not meet the specifications, it would either be caused by excessive ash content, substitution from some other locality, or that the specification of heat value did not apply. It would not be because the producer did anything to alter the heat value and the same is true of any constituent of the pure coal.

The matter of the amount of water which may be evaporated when coal is burned under boilers is a matter around which more confusion, trouble and uncertainty has centered than probably anything else. This is because there are so many factors having influence that it is impossible usually to know whether the result was due to the fuel, the character of manipulation it received, or to the efficiency of the steam-generating apparatus in which it was employed.

Under the heading of what is designated as suitability a large variety of demands are made regarding the performance of fuel which have no reasonable application, as will be shown in the following six examples of cases which have actually occurred. These cases are quoted as illustrating troubles as they often appear when the causes are not well understood.

Coal of Too Large Size in Hand Firing.

An important power producer had successfully operated a down-draft type of furnace for a number of years, but one day some new coal was received with which it seemed impossible to maintain the usual steam pressures. When the trouble was investigated, the engineer stated that the coal "appeared to be all right but that there was no heat in it." Screenings were the fuel which had been regularly employed, but owing to an emergency, it was necessary to accept anything obtainable, which happened to be some very high-quality lump coal; in fact a very much superior fuel to that which had before been satisfactorily employed.

The trouble was that a sufficiently deep fuel bed was not maintained. With the screenings, being of a small size, a comparatively thin bed was sufficient to exclude excessive air supply. But with the lump coal, the fireman followed previous practice as to thickness of fuel bed, with a result that so much air flowed between the pieces of the burning coal that the heat generated was almost entirely expended in heating this air and for this reason there was very little left to make steam in the boilers, or, in other words, nearly all of the heat went up the chimney. This fact, however, not being realized, it was thought the trouble was due to some mysterious characteristic of the coal.

Thin Fuel Bed.

Complaint in a certain instance was made of a high quality of washed nut coal being used on a mechanical stoker. The report was that the coal would not burn. The coal company supplying the fuel sent its trouble man to investigate. He returned with the statement that the coal looked all right; it was clean, bright and accurate as to size, but that it would not burn. He had watched the performance himself. The only explanation offered was that, for some unknown reason, the particular lot of coal was of such peculiar chemical quality that it could not be ignited. The fact was that the fuel bed on the stoker grate was too thin, allowing such a great excess of air to flow through that the temperature was not high enough to ignite the incoming coal.

Coal of Too Large Size with Stokers.

A large coal company had a case of serious trouble with an important customer. The question was one of quality of screenings. Two mines were involved, which may be designated as *A* and *B*. Mine *A* was located upon what may be called the Central Railway, while *B* was upon this railway and also connected with what may be designated as the Western Railway, both of which roads terminated in the city where the coal was used. It appears that shipment had been from mine *A*, but owing to lack of orders for lump coal on the Central Railway, this screening order was transferred to mine *B*, because there were lump-coal orders which could be shipped over the rails of what is called the Western Line. When this transfer was made, the customer immediately complained, claiming that the coal from mine *B* was of an inferior character and not at all suited to the purpose, which was steam production in boilers served with a certain type of stoker. These two mines were located about ten miles apart and operated in the same coal seam. As far as chemical analysis and physical conditions are concerned, the seam at both places is exactly the same, and from this standpoint it would be difficult to find, in the quality of the coal itself, the reason for the trouble. But the screenings from mine *A* had been delivered in steel cars, bearing the imprint of the Central Railway, while the coal shipped from mine *B* came in wooden cars, bearing the imprint of the Western Railway. This in itself was an apparent evidence to the purchaser that the coal was different, which belief was confirmed when it was placed in the stoker and failed to produce as good a fire as had the former screenings. The facts, however, were that mine *A* was equipped with a perforated screen having 1¼-inch round openings, while mine *B* had a bar screen, set somewhat further apart; the size of the openings, instead of being limited to the width, were the full length of the screen. The result was that the screenings produced by it were of a considerably larger size than those produced at mine *A*, because larger pieces passed through the bar screen. In fact, from the standpoint of the coal business, it was a superior fuel, because the size was larger, also from an analytical standpoint, because owing to the presence of a greater percentage of large pieces, the ash content was lower. It was in fact this superiority that caused the trouble. The coal was too large to form a sufficiently compact fuel bed on the stoker, with the result that an excessive quantity of air flowed through it, producing unsatisfactory combustion. The customer did not understand this feature, however, and attributed the trouble to some inherent quality of the coal itself, and believed that it was a fuel of an entirely different nature; something on the order of an anthracite rather than bituminous coal.

At this stage of the matter the customer was satisfied by screenings shipped from another mine, which operated in an entirely different coal seam, although producing fuel through a 1¼-inch shaker screen with round perforations. Thus, it appears an actual change in the quality of the coal itself, although slight, when accompanied by suitability in size, gave satisfaction.

Exceptional Example of Benefit from High Ash Content.

A large coal user, in an experimental way, invaded a new field for its fuel supply and a number of tests under boilers were made. The screenings from a certain mine gave an unusually high efficiency compared with those obtained from other points in the same general locality. This fuel, however, was extremely high in ash, but it was felt, at the time, that the coal was especially suited to requirements, although the high ash content was considered an objection and an investigation was made to ascertain if "similar" coal containing a reasonable ash content could be found. The investigation showed that, while the fuel in question contained a very large amount of ash, it was not of a seriously fusible character, therefore did not make trouble by clinkering, and that the amount of ash was sufficient to close the opening at the back end of the furnace between the bridgewall and end of the stoker grates, thereby excluding a very large excess of air which had found entrance when other coal of much lower ash content had been burned. An investigation at the mine showed that the roof was of such nature that a large amount of dirt became, at times mixed with the screenings, but that as far as the coal itself was concerned, it was not different from that of adjacent mines, but which, however, had a much

stronger roof and for this reason produced screenings which had much less dirt mixed with them. This is an illustration of an exceptional instance where high ash produced a desirable result.

Bad Stoker Action.

A steam-boiler plant served by a particularly faulty mechanical stoker was the cause of much trouble and indifferent service. On one particular occasion, however, performance was unusually satisfactory and the manager decided that it was due to his having some special coal which was superior to that usually burned. He thereupon called up the coal company and asked where the coal was produced. He was given the town and the mine from which it was shipped. He therefore decided that it would be desirable to obtain coal in the future from this mine. The dealer, however, was unable to regularly supply it, but shipped from an adjoining mine only a few miles distant, operating in the same seam and whose source of coal was exactly the same as the other mine. The performance of the plant when it was burned, however, was not satisfactory. This led the manager to call up the coal dealer and complain of the fuel. He was told that it was from the same locality and that it should in every way give the same results as that from the mine which he considered satisfactory. But in an effort to please the customer, special pains were taken to obtain additional coal from the desired mine and a report as to its performance asked for. The statement of the operator of the plant was that it was no better than the previous shipments. He was then told that it was fuel from the mine which he wanted and which he had stated had given satisfaction before. Notwithstanding the explanation, the manager could not realize that the fuel was from the same place as that which he had considered to be suited to his requirements and felt that if the coal dealer would deliver him "the right kind of coal" he would have no trouble.

Example of Confusing Report from Employees.

Coal dealer No. 1 supplied a certain size of washed coal by wagon to a customer. When the time of expiration of the contract approached, coal dealer No. 2, who was an important patron of the customer, solicited the business for the coming year for his company, with the result that the contract was awarded to him. Dealer No. 2 purchased coal, which was of the same size, from the same producer who had furnished it to dealer No. 1. He sent his teams to the same team track, loaded it out of cars of the same railway, or, in other words, furnished exactly the same product that dealer No. 1 had supplied and it would be reasonable to expect that the results and service would be identical, but the report received from the boiler room was that the fuel supplied by the new dealer was decidedly inferior in quality to that which had been received from the previous dealer, that a much larger quantity was required to do the same work and that the cost of furnace repairs had been increased owing to its use. The purchaser, of course, who could understand none of these things himself but who must depend upon the statement of others, laid the case before dealer No. 2 and explained to him that, while he was very anxious to reciprocate in a business way, he expected to receive equally good fuel as that which had been delivered under the previous contract. Of course, fuel furnished by the two dealers was of precisely the same grade, quality and prepared by the same washer, but how could the customer be expected to believe it in the face of statements of his own employees?

It is not the intention in the foregoing to intimate that the coal dealer or producer always furnishes satisfactory fuel, or that he delivers what he should, but it is the purpose to show to what extent and in what way it may be possible for him to fail to meet the consumer's demands.

Locomotive Terminal and Shops, K. C. M. & O. Ry.

The Kansas City, Mexico & Orient Ry. will eventually form an important link between Kansas City, Texas and the Mexican Pacific coast by a route 1,659 miles in length, terminating at Topolobampo, Mexico. More than half of this, or 882 miles, is now constructed and in operation, 510 miles of which distance comprises the northern section between Wichita, Kansas, and San Angelo, Texas.

A tract of land of some 760 acres has been secured, about three miles from the center of Wichita and adjacent to the main line of the railway. During the past year a large construction force has been engaged in creating here the beginnings of one of the largest railway repair shops in the Southwest. At the beginning of this development the railway officials retained Westinghouse, Church, Kerr & Co., to act as engineers and constructors, in order that their wide experience in the design of railroad repair shops might be brought to bear in laying out a permanent plant of such large dimensions.

General View of Wichita Shops, Kansas City, Mexico & Orient Ry.

Being conveniently located for the purpose, the city of Wichita was selected as the seat of the principal locomotive and car repair shops for the northern end of this system, and comprehensive plans have been entered upon for developing here the principal facilities for rolling stock repairs which will be needed by the railroad when entirely completed and in operation.

The completed plant will comprise both the general repair shops and the locomotive terminal for this division of the road. The locomotive terminal will ultimately consist

of a 40 stall roundhouse with an 80 ft. turntable, water tank, coal chutes, cinder pits and sand house. The locomotive shop, when ultimately completed, will be more than 500 feet long, and containing 20 erecting pits and will include the machine shop and the erecting shop, in parallel bays. Directly west of the locomotive shop there is to be a 75 foot transfer table with a runway about 630 feet long; and beyond this there is to be another building about 500 feet long, the northern portion of which will be the coach and paint shop, the southern portion to be used as the boiler shop. To the north of the roundhouse are the power station, the storehouse (with material platform around it), the foundry, the planing mill and the freight car repair shed, with lumber sheds and scrap bins conveniently located.

The locomotive terminal installed for present needs includes a 10-stall roundhouse with an 80-foot turntable, a 12-pocket coaling station, a sand house, a 160,000-gallon water tank, and a cinder pit.

The repair facilities which have been provided at this time, consist of a locomotive repair shop building that includes a boiler and blacksmith shop, machine shop and erecting shop; a power station for supplying power, light, heat and compressed air; a coach repair and paint shop, a storehouse, planing mill, and two sheds for storing rough and finished lumber; also, an oil house, a pump house for the water supply system and three hose houses. Besides the required piping systems for distributing the water, air and heating services to the various buildings, there are also

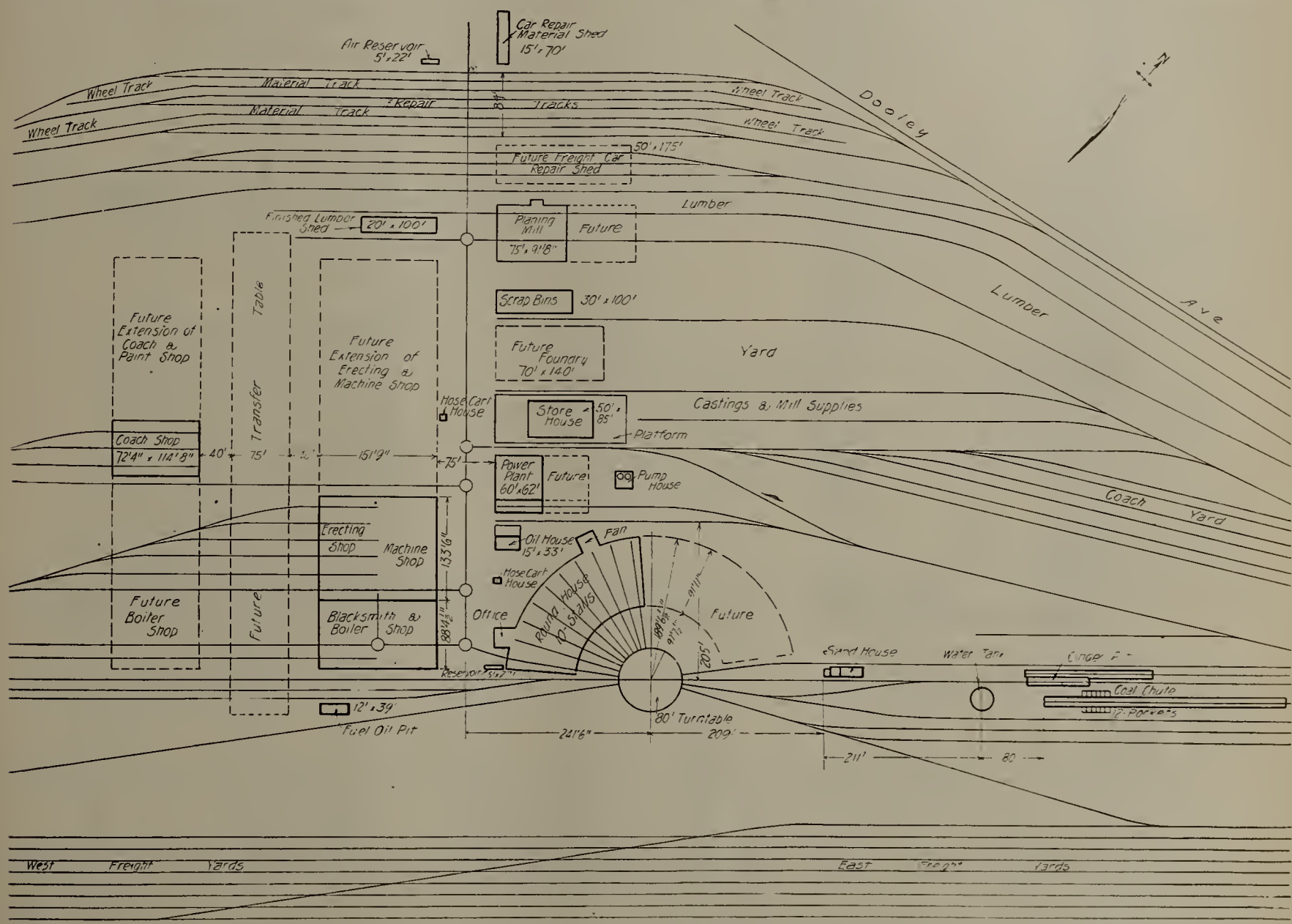

General Layout, Wichita Shops, Kansas City, Mexico & Orient Ry.

On the drawing showing the arrangements of the shops, will also be noted the freight yard on the side next to the main line, and to the northerly side of the plant is a generous sized repair yard.

The above-mentioned buildings are laid out to accommodate the repair facilities that will be required when the completed railway is in operation. In the meantime, even with the incomplete operating mileage, an impressive beginning has been made upon most of the buildings that will ultimately constitute the plant. The buildings so far erected are mostly of sufficient capacity only for initial needs; but each one is so built and located that its enlargement can readily be effected along predetermined lines that will ultimately fill in the prearranged plan herewith presented.

The site selected is on the prairie about a mile from the Arkansas River. The soil is alluvial sand, and because of the low elevation above the Arkansas River it is well saturated most of the time, so that the foundation and drainage problems called for especially careful treatment, 1,500 lbs. per square foot being the maximum permissible loading.

inter-communicating tracks between the shops, with industrial turntables at intersecting points.

The roundhouse is laid out for 10 stalls and is so disposed that 30 more stalls can be added when required. It is located far enough from the main line track to allow room for a freight yard of 8 tracks, when the full circle of the roundhouse is completed. The roundhouse walls are of brick with a wooden roof supported on timber posts. The roof girders are single sticks of 8 x 16 yellow pine from 20 to 26½ feet between the points of support. The roof is nearly flat and is of wood sheathing with 4-ply tar and gravel covering. The building foundations consist of rectangular concrete footings under the posts and the pilasters of the outer walls. The end walls of the roundhouse are carried on a continuous concrete footing about 4 ft. wide. In each stall there is a pit 61 feet long built of reinforced concrete resting upon a reinforced concrete mat foundation extended to an extreme width of about 10 feet. The concrete pit side walls are 2 feet thick. The track rail rests upon one 8x12 stringer and alongside it is a separate 12x12 jacking stringer. Two stalls are fitted with driving wheel drop pits while the

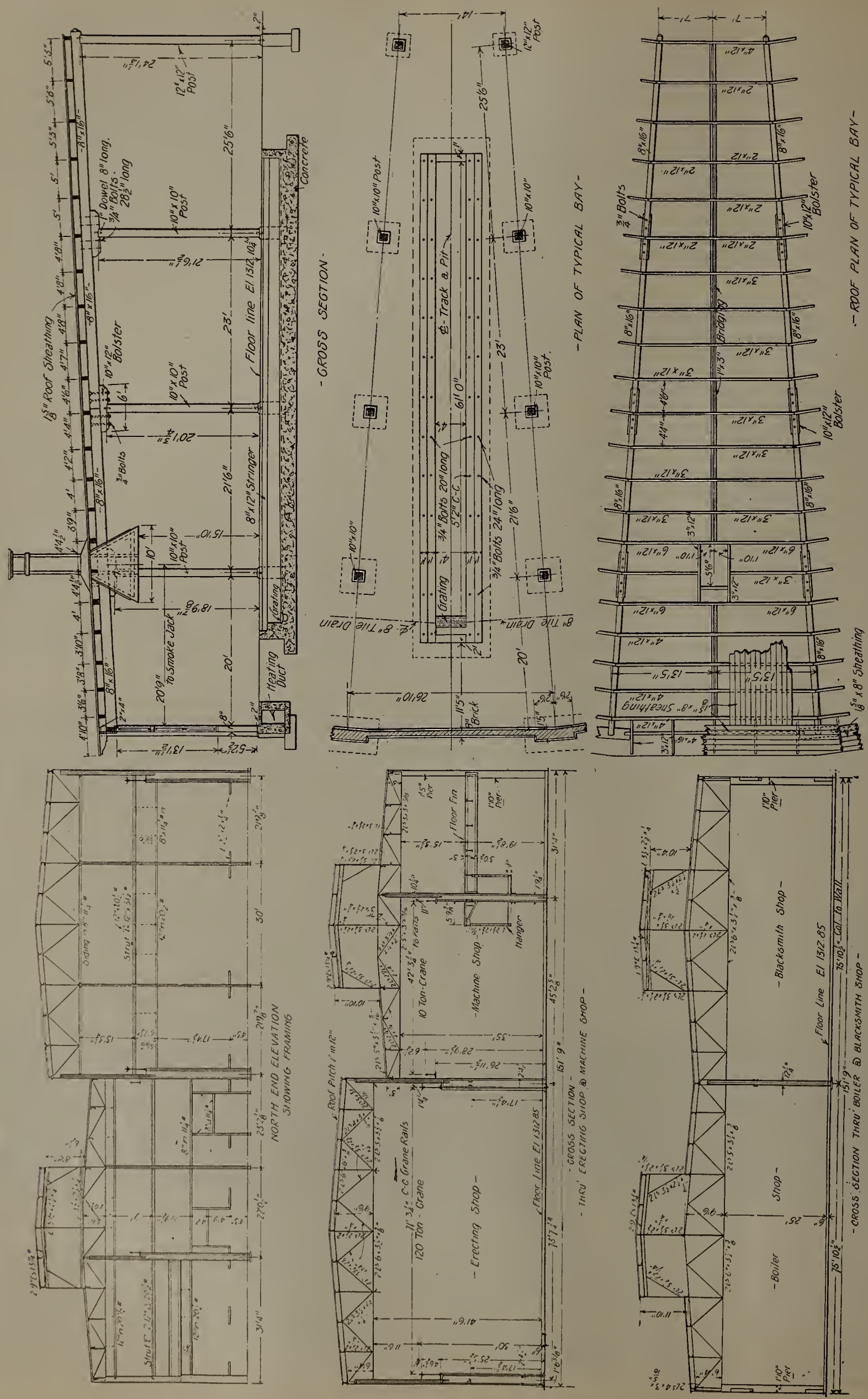

Round House Construction, Wichita Shops.

Construction of General Shop Building.

third one from the south end is fitted with a truck drop pit. All the drop pits are built of reinforced concrete and are fitted with hinged rails.

The tracks enter the building through double leaf doors 14 feet wide in the clear between posts. The rear of the roundhouse is well lighted as the windows take up the full width of the space between pilasters and run nearly to the eaves. The smoke-jacks are built of asbestos lumber.

The roundhouse is supplied with steam, water and air service. The house is heated by the indirect fan system, using exhaust steam, the fan being located in a small brick addition whence air is forced into a system of concrete and tile ducts in the roundhouse floor radiating to the various pits. The capacity of the fan is sufficient to change the air in the roundhouse once every 10 minutes.

Live steam is supplied to the roundhouse for blowing up locomotive fires through a 1½-inch connection at each stall. A 1½-inch water line is brought to each stall for boiler washing. For pneumatic tools, flue cleaning, etc., compressed air service is piped from the power station with a connection from each stall. The artificial lighting of the roundhouse is by means of 9 3-light clusters of 16 c.p. lamps and 33 single 32 c.p. lamps. Wall plugs are distributed about the pits and on the walls and posts for extension lamp cord connections.

At the southwest corner of the roundhouse is a one-story addition divided into four rooms, which include a wash room and a toilet room for the men, and two rooms for the foreman's office.

The roundhouse is served by an 80-foot turntable. The low level of the terminal site makes natural drainage difficult and a shallow turntable pit is therefore desirable. Accordingly the through type of table was selected, which required a pit but 3½ feet below grade. The central foundation is a slab of concrete 22 feet square and 3 feet 5 inches thick reinforced by 1⅛-inch round rods. The ring wall foundation is an annular slab of reinforced concrete 13½ feet wide across the bottom, 7 feet wide at the rail base and brought up to form a pit wall 2 feet thick.

Besides having two independent connections to the main line and yard tracks, the turntable has three separate tracks leading past the cinder pit, sand house, coal chute and water tank, so disposed that two locomotives can be simultaneously served at each of these points. There is also an independent track from the turntable to the repair shop.

Coal Pocket.

For coaling locomotives a timber trestle is located in the center of the locomotive terminal yard east of the roundhouse. There are 6 side dump pockets on each side of the central coal track, lined with steel plate and fitted with the Williams-White dump gate and chute. Each of the 12 pockets is of about 4 tons capacity.

Cinder Pit.

On the track north of the coal pocket is the cinder pit. On account of the difficult drainage and soft soil this was also of somewhat special design. There is a single track slightly elevated, one rail resting on wooden blocks set in a concrete stringer about 5 feet deep, the other on a 15-inch I beam carried on concrete posts, and the whole supported on a reinforced concrete mattress 15 feet wide and 8 inches thick, the bottom of the mat being about 4 feet below grade while the rails of the track are about two feet above grade. The cinder pit is brick paved on a cinder bottom and is only 6 to 9 inches below the ground level. The ash car spur track is depressed 3½ feet below ground level and is approached by a 5 per cent grade. Drainage of the ash track depression is to the regular sewer system, through a 6-inch drain. The cinder pit will be duplicated on the opposite side of the depressed track in the future enlargement of the terminal.

Water Tank.

The water tank is located between the same tracks as the coal chute and is designed to serve both for the locomotive supply, and as a reservoir for the entire terminal and shop plant.

The tank is of steel 26½ feet diameter, 40 feet high, of 160,000 gallons capacity and rests on a reinforced concrete base. The locomotive water supply is drawn from a level

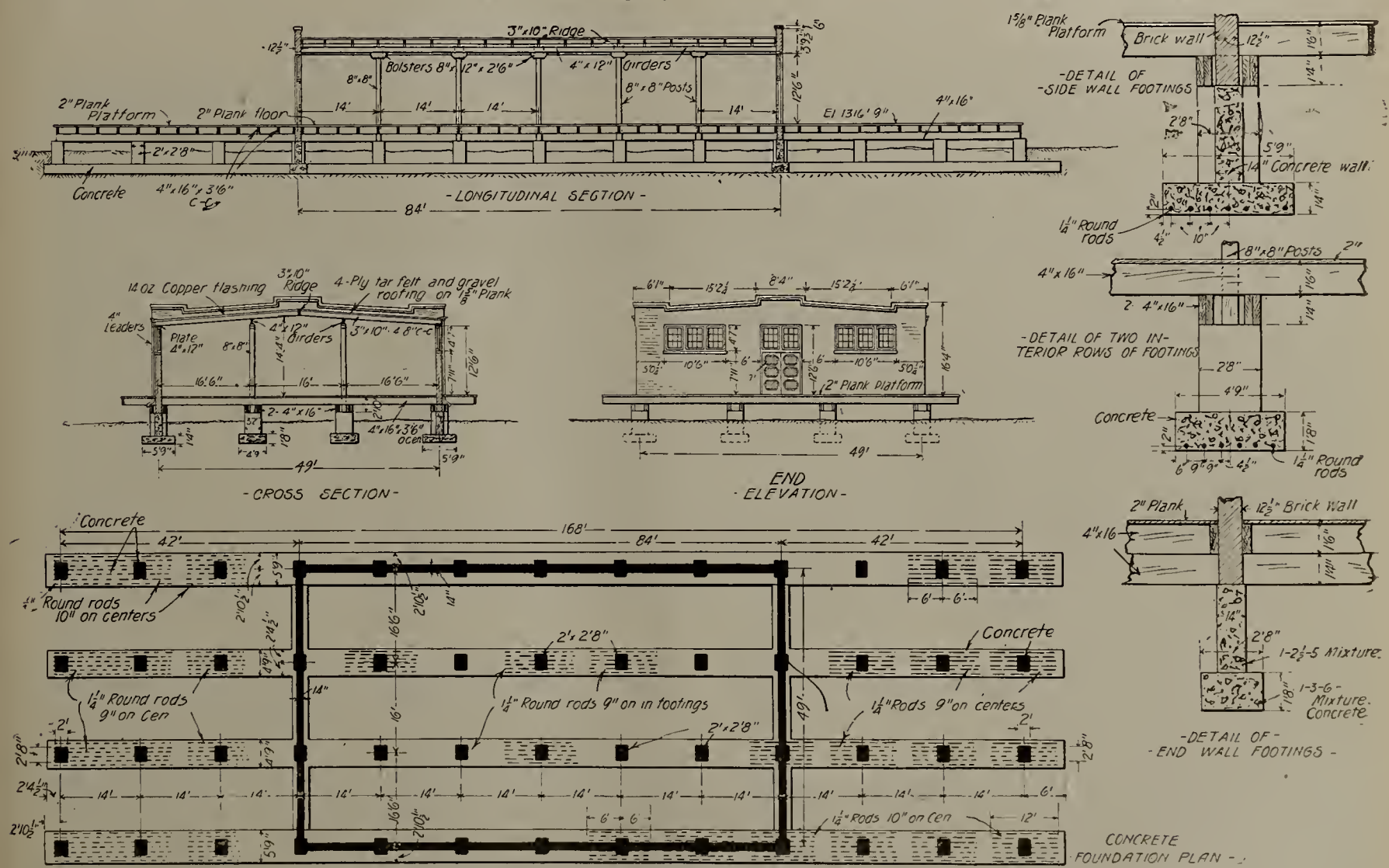

Details of Store House, Wichita Shops.

Exterior of Round House and General Shop.

20 feet below the top leaving the lower 20 feet as reservoir capacity for the water supply system of the plant. There are two locomotive tank water spouts of the usual type mounted on opposite sides of the tank, so that two locomotives can take water simultaneously. The top of the tank is fitted with a wooden roof to diminish freezing from the top in winter. The water level is maintained within the desired limits by a float-operated electrical switching device which controls the electric driven pumps in the well house, that supply the tank.

Sand House.

The sand house is between the water tank and the turntable and is of timber construction, comprising a receiving bin, a drying room, a screen, an air lift and an elevated bin for distributing dried sand to locomotives. The sand stove is located adjacent to the end of the bin. After being run through the stove and screened, the sand drops into a steel tank in the base of the tower from which it is lifted by air pressure to the elevated bin in the top of the tower, whence it is distributed to locomotives by the usual spouts.

Machine Shop.

This is a steel frame building, about 152x220 feet with brick walls and wooden roof. The erecting shop and machine shop are in three parallel bays, with the boiler and blacksmith shop running across the south end of both and separated therefrom by a brick fire wall. The machine shop foundations consist of continuous reinforced concrete slab footings, under the bases of the building columns, and the side walls, also under the cross wall dividing the blacksmith from the machine shop portion. The erecting shop pit foundations are 46 feet by 10 feet reinforced concrete slabs. The pit walls are of concrete 2 feet thick and capped by 8-inch timber stringers. The bottom of each pit is sloped to a sump, which discharges into the drainage system.

The erecting shop is 132 x 76 feet, and accommodates six pit tracks with separate entrances through the west wall of the building. The clear height of the roof trusses above the floor is 41 feet 6 inches. The shop is designed for a 120-ton traveling crane, the span between centers of the crane rail being 71 feet 3¼ inches. The crane runways are supported on steel columns. The roof is very slightly pitched and is without a monitor. The upper tier of windows on the west wall runs up practically to the eaves, providing ample light for the entire floor space. The side walls are of brick in the lower story, the upper portion of plaster on special galvanized expanded metal. There is a double swinging door for each track entrance with a transom light over each one of them.

The machine shop is built in two longitudinal sections, that over the heavy machine floor being served by a 10-ton traveling crane running the entire length of the shop over the large tools, the other section having a gallery running its full length, and without crane service. There is a small mezzanine gallery at each end of the latter, one containing a foreman's office and the other the men's lockers and lavatory. The machine shop has a monitor roof 10 feet high over its entire length and all the space between pilasters between the east wall of the building is given up to windows in both stories of the gallery.

Planing Mill.

Beyond the storehouse and scrap bins is located the planing mill. This is a brick building 94 x 78, one story high with a single row of timber posts down the center supporting a wide monitor-type roof on wooden trusses. Like the other shop buildings, this is arranged for future enlargement, which will be toward the east. Consequently, the present east wall is temporary and made of timber construction.

The brick walls are carried on concrete footings 4 feet wide and the center posts on separate footings 5 feet 3 inches square. The main windows are about 10 x 16 feet and four swinging doors are arranged to accommodate two railroad tracks completely through the building. A small addition is built on one side to accommodate toilet and lavatory facilities. The building is heated by the direct system using exhaust steam from the power house, and artificial light is supplied by six Type E Cooper-Hewitt lamps. Live steam service is also introduced for heating glue pots, and compressed air service is piped into the building.

The planing mill is fitted with a number of new tools, among which may be mentioned a 14 inch x 20 inch timber sizer, a 24-inch pattern maker's lathe, a 4-spindle wood borer, a 6 x 14 moulder, a 2-spindle shaper, a jig saw, combination saw, a 24-inch pony planer, a self-feeding rip saw, and a cabinet mortiser and borer, besides a complete outfit of saw and knife grinding machinery, benches and vises. Several old tools from another shop are also used. The tools are belted to two line shafts run by separate D.C. motor of 40 and 50 H. P. respectively, the line shafting being carried on the roof trusses. Fire protection is supplied by two hose valves within the building.

Lumber Sheds.

Beyond the planing mill, space is reserved for a future freight car repair shop, and beyond, across the repair yard tracks is a one-story car repair material shed of timber construction. Directly across the main thoroughfare from the planing mill is another shed for storing finished lumber for car repairs.

Water Supply.

One of the most important features of a locomotive terminal is the water supply. Directly east of the power house is located the well house, which incloses two wells about 55 feet deep, bored down into water bearing sand, that tap an ample supply of excellent water, noticeably of better

Interior of Planing Mill.

quality for boiler use than that obtained directly from the river. The natural level of the water in these wells is but 5 or 6 feet below the surface and they are able to supply more than 200 gallons per minute each. They are fitted with reinforced concrete casings all the way down, having openings in the lower sections only, to admit water. The well house is a one-story fireproof structure of brick and concrete, 19 x 20, with basement about 5 feet deep and pump pit extending about 7 feet below the ground level, the whole structure being on a solid concrete slab foundation. Over the top of each well casing there is a centrifugal pump run by a 15 H. P. Westinghouse motor set directly over it. Each pump has a capacity of about 150 gallons per minute and delivers water into the 10-inch main running to the bottom of the 160,000-gallon water tank, previously described, which performs the double function of reservoir and locomotive supply tank. The pressure in the distributing system to the service piping and fire hydrants is ordinarily maintained by a 400-gallon steam service pump located in the roundhouse fan room, which maintains a pressure of about 100 pounds on the distributing system and the boiler washing line in the roundhouse. This pump is supplemented by an Underwriter's fire pump of 750-gallons capacity located in the well house. Both these pumps draw from the 10-inch main and discharge into the general distribution system and can thus supply a maximum on emergency of 1,150 gallons per minute. The distributing main is 8 inches, reduced to 6 inches at extremities and extending the full length of the main thoroughfare between buildings, with lateral extensions covering the entire property. Besides the hose valves already noted in the buildings, there are 17 out-door hydrants distributed over the property and water service connections are extended into the coach yard track for washing coaches. There are three hose houses conveniently located about the property, each containing a supply of fire hose mounted on hose carts.

Air Supply.

From the air compressor in the power station compressed air is conducted through mains of 3 inches down to 1½ inches diameter, to all the shop buidlnigs, the sand house and into the coach yard, also to the sewer air lift and to the fuel oil tank. Eventually this service will be extended into the freight yard. An equalizing air reservoir is located at the end of the main in the freight car repair yard.

Electrical Distribution.

The yard tracks are illuminated by 19 Westinghouse carbon D.C. arc lamps on the parallel system at 110 volts. They are mounted upon pole top fixtures upon wooden poles. All distribution of electric current to the lamps and buildings is by overhead wires. Within the shop buildings the electric supply main conductors are generally run open, being supported on the roof trusses, while the branches to motors, lamp circuits and wall and pit connection plugs are mostly inclosed in conduit, many of them running under the floors.

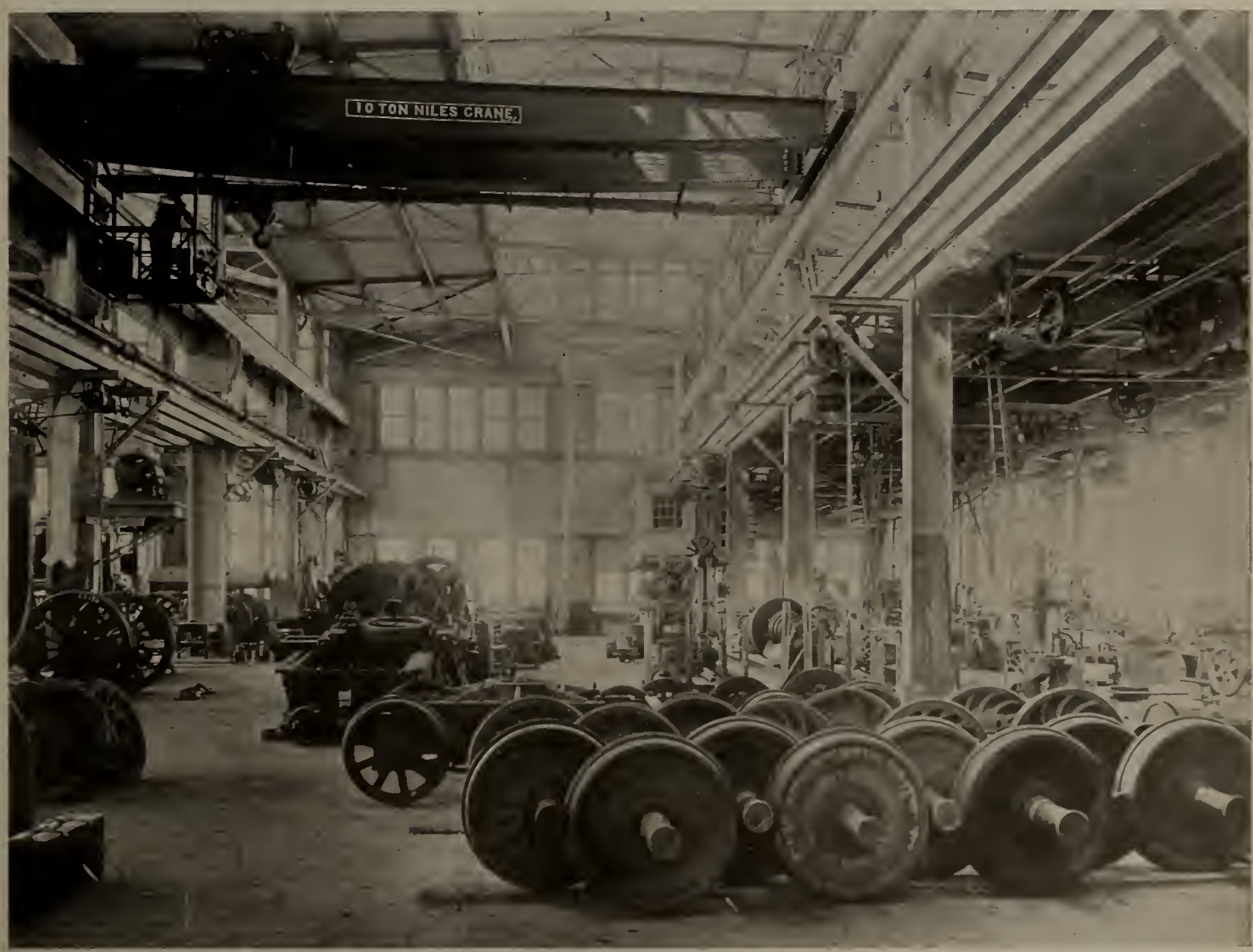

Interior of Heavy Machine Bay, Wichita Shops.

Drainage System.

The Arkansas River is a mile distant and at times of high water drainage by gravity through the usual arrangement of sewer connections would be impracticable. The main sewerage system of the buildings is constructed of vitrified tile in the usual manner and connects with the

city system of Wichita, but in order to compel the outward discharge of drainage into the main sewer when flooded, a sewer lift was placed at a convenient point in the yard which receives the entire out-flow from the yard and buildings, and by means of an air lift elevates it so as to provide an artificial head of about 7 ft. that will insure discharge into the city sewer under any flood conditions. The sewer lift is a 3-chambered pit with gate valves connected in such a way as to practically form a 3-way cock. With the valves open one way the sewage flows from the receiving pit to the discharge and thence to the outgoing sewer by gravity. With valves open the other way, and with two air lifts of 300 gallons capacity each per minute brought into action, the sewage is elevated from the receiving pit to the 7-foot level in the discharge pit. The roof drainage is handled separately into the discharge pit without being air-lifted, as there is no objection to the water backing up in roof conductor pipes because they are kept separate from the other sewer connections of the buildings. The sewerage system is constructed of 6 and 8-in. connections from the buildings, to 10, 15 and 24-in. main sewers and includes a number of brick catch basins and manholes besides the sewer air lift pit above described.

Fuel Oil Supply.

At the south end of the locomotive repair shop building in a concrete vault is a cylindrical steel tank for fuel oil which is used at the furnaces in the blacksmith and boiler shops, and also to the roundhouse where it is used for lighting fires.

Pipe Tunnel.

Between the power station, the locomotive repair shop, and the roundhousefi, the aggregation of important main pipe lines for live and exhaust steam, air and water service made it desirable to construct a pipe tunnel for properly protecting them, especially on account of the exhaust steam heating system used in the roundhouse and locomotive and repair shop. In this tunnel are run the exhaust steam, live steam outgoing and return pipes, and air piping. The tunnel is about 4 ft. wide, from 4 to 6 ft. deep and is built with concrete walls and roof. There are about 270 lineal feet of subway and access to it is had through a number of conveniently arranged openings.

The construction work was begun in May, 1910. The principal buildings were completely inclosed by November, the equipment promptly installed, and the entire locomotive terminal and shop equipment are now in full operation. The development above described was carried out by Westinghouse, Church, Kerr & Co., under the direction of E. Dickinson, vice-president and general manager; F. Mertsheimer, general superintendent motive power and car department; W. W Colpitts, chief engineer, and A. H. Dickinson, superintendent. Master Mechanic David Paterson is in charge of the operation of the shop.

THE VAN HORN AND ENDSLEY SPARK ARRESTER.

The illustrations herewith show the equipment of a Chicago & North-Western suburban locomotive with what proves a very efficient spark and cinder arrester. In the photograph the crooked nozzle and hopper under the extended front end incidental to the application of the device, are plainly shown.

The hopper in this case is made large enough to hold the accumulations of a 40-mile run and is emptied at the terminal at each round trip.

The question of the disposal of the cinders is a problem yet to be solved.. Hoppers cannot be large enough to carry from division point to division point but on many types could be large enough to hold between water tanks. There has been made a design for dropping them dead outside of the rails and the ties as fast as they are created. While it is found that there is more disagreement of opinions among motive power men than among doctors, the ultimate solution of the cinders will undoubtedly be to return them to the firebox to be burned. That problem will be worked out but the problem has been solved already sufficiently to meet the needs in the forest and lignite sections. The firebox problem is largely one of economy.

At the Purdue tests on the device the designers overlooked learning the effect of an overflow in the hopper and an accumulation in the middle chamber as to whether it would then throw the cinders out of the stack. When locomotive No. 395 was sent from Chicago to Clinton, Ia., and made a 70-mile run, or probably traveled over 200 miles, it seems to have been done without any instructions to the locomotive men. It was found the hopper had not been emptied and the middle chamber was filled full to the collar and the front chamber piled up at the sides higher than the nozzle with cinders. There had been no evidence of cinders being discharged at the stack but of course the locomotive was steaming poorer all the while.

After the tests of the VanHorn and Endsley Spark Arrester at Purdue University to determine the successful collection of the cinders, Messrs. Quayle and Bentley, of the Motive Power Department at Chicago of the Chicago & Northwestern Railway, offered their co-operation in equipping a larger locomotive for actual service and to determine the steaming qualities with the device in the front end. There was selected locomotive No. 803, being a 4-6-0 type with a 61-inch diameter smoke-box, cylinder 19x24, drive wheels 56 inches, boiler pressure 175 pounds. This locomotive was and is to be continued in the suburban service, which requires reliable performance to keep to the time schedule.

As there was not room between the front tube sheet and saddle to locate the spiral diaphragm and hopper, a 24-inch extension of the smoke-box was put on, making a total length of 94 inches, and the hopper located in front of the saddle. The exhaust nozzle was carried forward 52½ inches. The stack is the ordinary four-foot, cast-iron, 16-inch choke, with inside stack projecting 13 inches into the smoke-box, with 28-inch diameter bell-shaped bottom. The nozzle projected upward 13 inches from the bottom of the smoke-box.

Drawings for the spark arrester were made from furnished blue prints and were ready when the locomotive was taken to the back shops for heavy repairs. Work on the smoke-box was done at the same time. While the extension was being made and put on in the boiler shop, the paterns and castings were made for the special exhaust pipes, and the spiral diaphragm, circular baffle-plate, collar, and the hopper made in the tank shop. Then everything was fitted into place at the proper time. The spiral was made of No. 12 iron fastened to the shell and center support by 1½ x 1½-inch angle iron. The circular baffle-plate, collar and hopper were of No. 10 iron. The parts are so made that portions or all can be taken out to reach the tube sheet. While it was found there had been changes in the locomotive not recorded in the draughting room and shown in the blue print, which required some changes in the drawings. no delays were occasioned beyond the repairs being made.

Upon leaving the shops, the locomotive was placed in freight service, where it was found that the four-inch nozzle tip used was causing large holes to be pulled in the fire and the locomotive steaming poorly. A 4½-inch tip was then tried, and the fire did not burn quite hard enough. A 4⅜-inch tip was then substituted, with perfect steaming of the locomotive and a very even burning over the entire area of the grate.

Locomotive Equipped with Van Horn-Endsley Spark Arrester.

The locomotive was then tried on the shop train. In a distance of twenty-four miles, 2,000 pounds of coal were burned and 285 pounds of cinders were caught in the hopper. It steamed well and the fire burned even. On this run, it being dark, five live sparks were seen, two of which reached the ground, thrown at a time when the reverse lever was "down in the corner" in the last notch and the throttle wide open, a condition not called for in actual service.

The locomotive was next placed on a suburban run of thirty-two miles with 14 stops on a one hour and two minute schedule. On this run the locomotive steamed freely and burned an even fire. The hopper is 18x23 inches, 37½ inches deep, holding approximately 400 pounds. At the end of the thirty-two-mile run, this hopper was found to be full. At the end of ninety-six miles run, the front or nozzle chamber was opened, and it was found that about 50 pounds of cinders had been carried over into it. This was about 4 per cent of the total cinders, or twice the amount shown in the dummy boiler and University tests.

The drawings and application of the device were made by Prof. Louis E. Endsley of Purdue University, and the installation was supervised by F. C. Bowman.

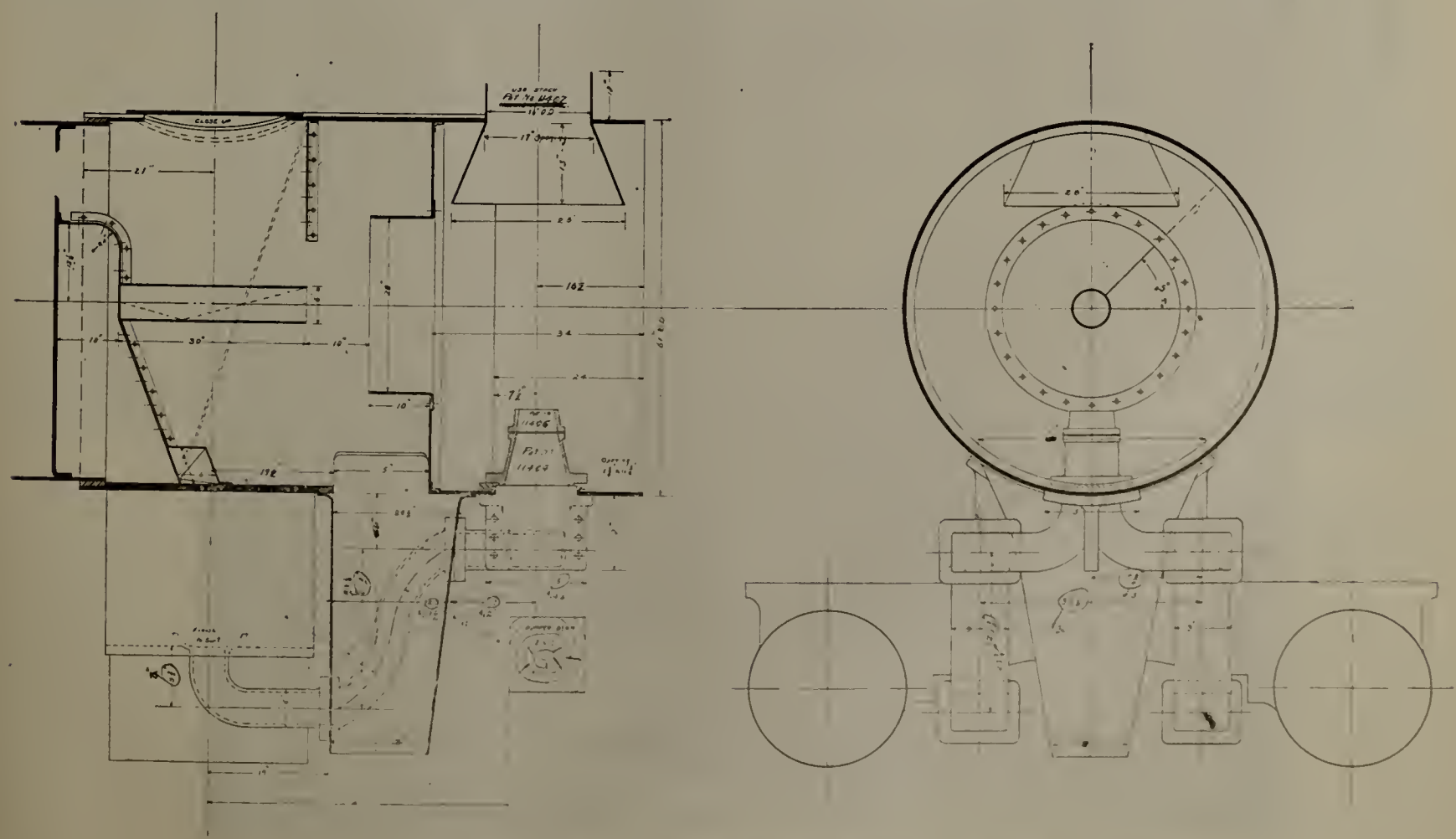

Van Horn-Endsley Spark and Cinder Arrester, as Applied to C. & N. W. Locomotive.

WASHOUT SYSTEM AT HAMPTON YARDS ROUNDHOUSE, D. L. & W. R. R.

At Hampton Yards, Scranton, Pa., the Delaware, Lackawanna & Western Ry. has just completed the erection of a 41-stall modern roundhouse. One of the noteworthy features of this roundhouse is the Miller hot water locomotive boiler washing and refilling system which has been installed by the F. W. Miller Heating C., Chicago. The system installed is of sufficient capacity to take care of six engines simultaneously; two blowing down, two washing out and two refilling and of turning about 48 engines per day. The system furnishes water for washing out purposes at an average temperature of not less than 140 degrees and for refilling purposes at a temperature close to boiling point. These temperatures being obtained by the heat units contained in the blown off water and steam from the locomotive. All temperatures are obtained automatically, no manual tempering being necessary. The equipment consisting of pump, tank, heater and strainer box located on the two end pits in the roundhouse and the blow-off washout and refilling lines are carried around the center line of the house with drops between each pair of pits as illustrated in the photographic reproduction herewith.

The Miller system of heating was also installed in this house, which is quite an innovation and also a radical departure from the railroad company's former policy of installing its own heating work.

Personals

C. W. Downs, general foreman of the Chicago, Terre Haute & Southeastern at Terre Haute, Ind., has been transferred to Bedford.

A. G. Spotts has been appointed general foreman of the Chicago, Terre Haute & Southeastern at Terre Haute, Ind.

J. B. Elliott, master mechanic of the Baltimore & Ohio, at New Castle Junction, Pa., has been appointed master mechanic at the Glenwood shops, Pittsburg, succeeding J. F. Prendergast, resigned.

A. M. Darlow, roundhouse foreman of the Chicago & Eastern Illinois, at Danville, Ill., has been appointed mechanical engineer of the Buffalo & Susquehanna Railroad, with office at Galeton, Pa.

J. E. Mehaney has been appointed general storekeeper of the First district of the Oregon-Washington Railroad & Navigation Company, with office at Portland, Ore.

J. Lowell White has been appointed assistant purchasing agent of the New Orleans, Texas & Mexico, the Beaumont, Sour Lake & Western, the Orange & Northwestern and the St. Louis, Brownsville & Mexico, with office at Houston, Tex.

The title of W. H. Snyder, general foreman, mechanical de-

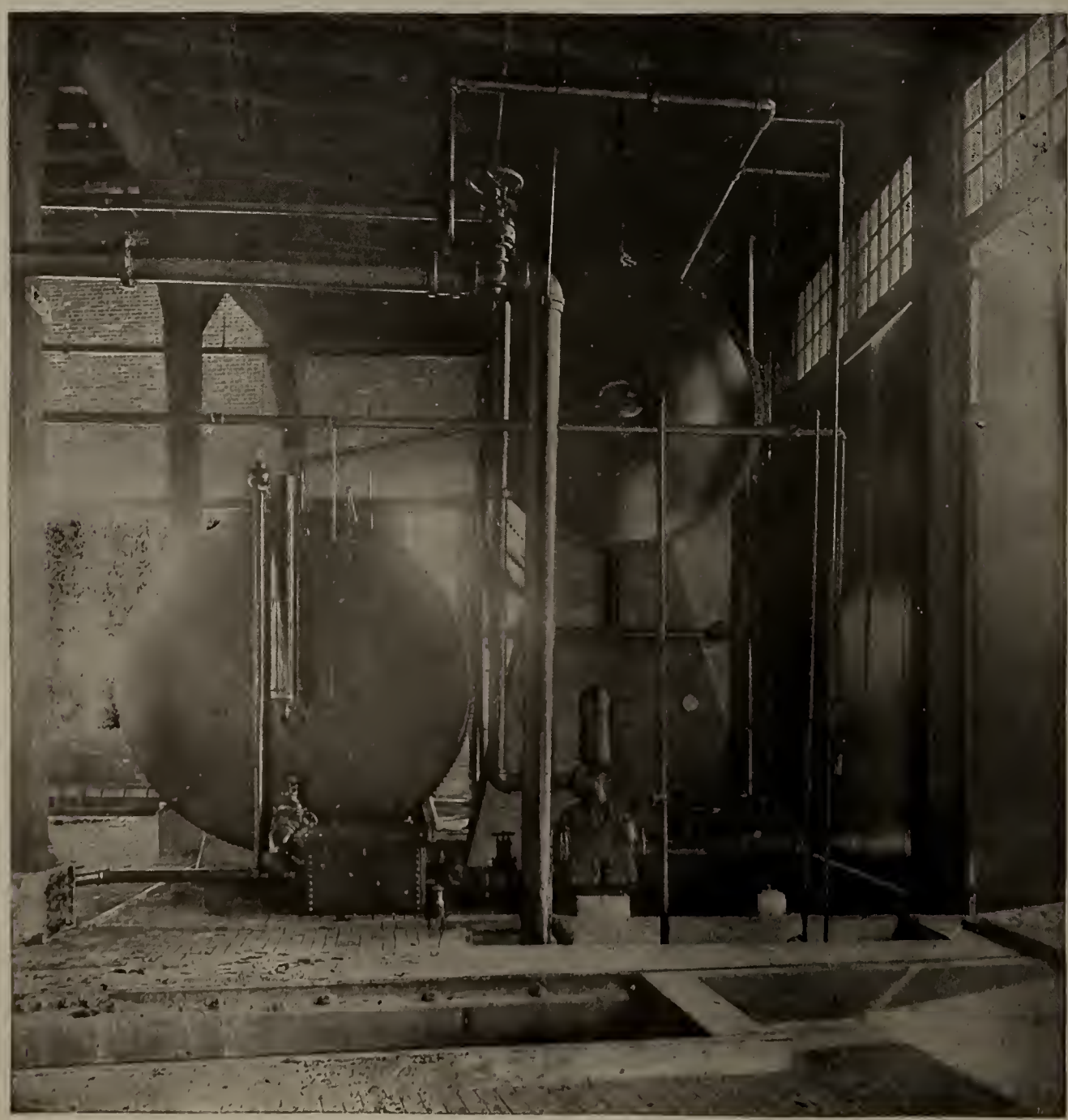

Miller Boiler Washing System Installed at Scranton.

partment, of the Tonopah & Goldfield, at Goldfield, Nev., has been changed to master mechanic.

S. H. Draper, general air brake inspector of the Northern Pacfiic at St. Paul, Minn., has been appointed master mechanic of the Rocky Mountain division, with office at Missoula, Mont., succeeding Silas Zwight.

Mr. Lucius B. Sherman, who has recently been elected vice-president of the Age Gazette, well merits this recognition. Mr. Sherman has been connected with railway journalism for the past twenty-one years, and his native ability, untiring energy and pleasing personality, eminently qualifies him for his new post. His friends and admirers look for still further achievement.

I. D. Thomas, master mechanic at the Altoona (Pa.) machine shops of the Pennsylvania Railroad, has been promoted to superintendent of motive power of the Erie division of the Pennsylvania Railroad and the Northern Central Railway, with offices at Williamsport, Pa., succeeding J. T. Wallis, promoted. J. C. Mengel, master mechanic at West Philadelphia, Pa., succeeds Mr. Thomas. J. M. James, master mechanic at Olean, N. Y., succeeds Mr. Mengel. J. M. Henry, master mechanic at Sunbury, Pa., succeeds Mr. James. Eliot Sumner, master mechanic at Baltimore, Md., succeeds Mr. Henry. H. P. Meredith, assistant engineer of motive power in the office of the general superintendent of motive power, at Altoona, Pa., has been appointed master mechanic, with office at Baltimore, Md., succeeding Mr. Sumner. C. L. McIlvaine, assistant engineer of motive power of the Erie divsion and the Northern Central Railway, at Williamsport, Pa., succeeds Mr. Meredith. C. D. Barrett, assistant master mechanic at Wilmington, Del., succeeds Mr. McIlvaine, and B. B. Milner, on special duty in the office of the assistant to general manager, has been appointed assistant master mechanic, with office at Wilmington, succeeding Mr. Barrett.

A. L. McNeill has been appointed assistant purchasing agent of the Chicago & Alton, and the Toledo, St. Louis & Western, with office at Chicago.

Incident to the dividing of the Iowa division of the Chicago & North-Western into the East Iowa division and the West Iowa division, W. H. Bradley, formerly master mechanic of the Iowa division at Clinton, Iowa, has been appointed master mechanic of the East Iowa division, with office at Clinton, and J. E. Osmer, assistant master mechanic at Boone, Iowa, has been appointed master machanic of the West Iowa division, with office at Boone.

H. M. Curry, general master mechanic of the Northern Pacific lines east of Mandan at St. Paul, Minn., has been appointed mechanical superintendent, with office at St. Paul, succeeding William Moir, retired after having been with the company for almost 30 years. Silas Zwight, master mechanic at Missoula, Mont., succeeds Mr. Curry.

T. Kilpatrick has been appointed general foreman at the Cedar Rapids (Iowa) shops of the Rock Island lines, succeeding J. M. Whalen, resigned.

Washout, Blowoff and Refilling Pipe Lines, Hampton Roundhouse.

Among The Manufacturers

Sterling H. Campbell, Gen. Sales Agt., Western Railway Equipment Co.

A. M. Kittredge, President, Barney & Smith Car Co.

Lucius B. Sherman, Vice-Pres., Railway Age-Gazette. (See item page 239.)

AN ABRASION RESISTING METAL.

A new product which is of special value for use in connection with the construction of railway equipment has recently been placed on the market. It is called "Feralun" and is a combination by a patented process, of iron and alundum or pure artificial corundum which gives a hard durable surface to withstand abrasion and corroding action of dilute sulphuric acid in coal and ash water.

Feralun was first used about four years ago for liner plates in centrifugal sand dredging pumps and in that service was found to wear three to five times as long as hard white iron or rolled steel plates. It was noticed that with slight changes in method of manufacture a casting with a very gritty surface could be produced. Such castings were not desirable for dredge pump liner plates, but it was thought

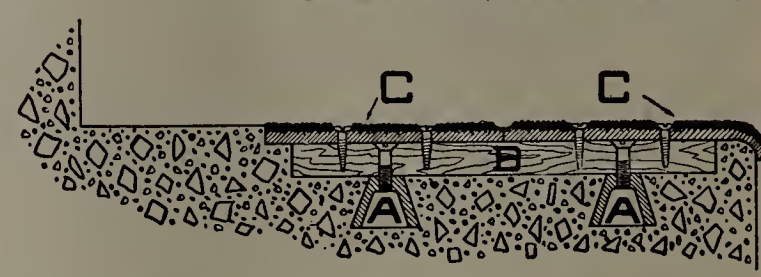

Detail of Step Construction in Subway Work, New York City.

First Commercial Installation of Feralun Treads.

Feralun Used for Safety Tread on Car Step.

they would make a good anti-slip surface for stair treads, inclined passageways and other places where a "safety tread" was desired.

After numerous experiments the first commercial installation of Feralun treads was made February, 1909, at Jersey City, in a large railroad terminal on an apron leading to the upper deck of ferry boats. One of the illustrations shows the appearance of this installation more than two two years afterwards and up to the present time the treads show no signs of wear.

It has been found that most materials used on stair treads in railroad stations or for car steps and platforms, to protect them from the excessive wear, and intended to prevent people from slipping, are not always efficient and under some conditions are decidedly dangerous. The weak point with them is that a smooth metal rib along the nosing is necessary for mechanical reasons; and the element intended to prevent slipping soon wears even with or below the metal ribs containing it, thus becoming valueless. Contact of pedestrians' shoes then is with the slippery metal only. This condition usually occurs in a few months of average service. A plain polished metal plate would be as good. If there is mud or a slight covering of snow or ice those treads are dangerous. When rubber is used a metal piece usually extends along the nosing and the soft rubber back of it, wearing more rapidly, soon makes a slight offset that is a prolific cause of tripping, as one's heel catches on it when alighting from cars or descending stairs. Rubber, though not as high in first cost as ordinary metal treads, wears out so rapidly that maintenance costs soon prove it to be much more expensive in the long run. It is not efficient as a preventive of slipping when wet or covered with oil. Ordinarily materials and most safety treads wear away so rapidly that constant repairs or renewals are necessary.

Feralun, it is claimed, wears more than four times as long as chilled iron and its efficiency as an anti-slip surface is unquestionable. The gritty surface grips the leather of shoes even if it is covered with oil. The anti-slip element is carried down over the rounded nosing, thus making absolutely safe in these treads the dangerous features of other treads. Particular attention should be paid to this feature because one almost invariably treads on the edge of the step when descending stairs where a slip usually proves serious. Feralun treads have the anti-slip element in the nosing and have been in service in the Fulton Street subway station, New York City, for sixteen months without getting slippery along the nosing. This installation has been exposed to the weather without any protection through two winters and it is a noticeable fact that when there is a slight crust of snow, mud or ice, the sharp points of the abrasive material in the surface cut through and the efficiency is in no way lessened.

When considering new construction it is well to arrange for renewal if it should ever be required. Reinforced concrete stairs are very popular at present. The steps must have some protection against chipping at the nosing. The Feralun tread is embedded flush with the finished surface of the steps. It should be in two sections, a front and a back, because the front piece gets two to three times as much wear. The advantage of two sections is obvious when considered from a maintenance standpoint. They are attached with wood screws to oak blocks embedded in the concrete and these in turn held down with metal anchors and bolts as shown in the drawing. The advantages of this method are so decided when making renewals that it is strange it is not more universally used. The drawing shows in detail a section through a step as constructed in new subway work in New York City.

As floor plates, steps and runnnig boards, etc., in boiler and engine rooms, the oil from the machinery may cover treads or floor plates of this material without lessening its efficiency as an anti-slip surface. In cars, weight is an item of importance. These safety treads for car steps are one to three pounds lighter per square foot than other metal safety treads. The entire step may be made of Feralun without using a sub-tread of wood or metal.

Feralun, because of its abrasion resisting qualities is used for locomotive sander trap elbows; centrifugal sand dredge pump liner plates and discharge pipes; sand blast nozzles; ash ejector elbows and wearing backs; plates for use in crushing machinery, etc. It has been found that Feralun also has the quality of resisting the acid action of mine water. It is manufactured by the American Abrasive Metals Co., New York City.

Our Own Convention Exhibit

The railway supply men have done a great deal to make the Master Mechanics' and Master Car Builders' conventions successful and profitable. Their exhibits have varied widely in character and many have been made at a great expense, as for instance when heavy machine tools are transported hundreds of miles. And though it is barely possible that they might like to have their products used more extensively, it remains true that the railway official reaps the benefit of their convention efforts. A round through their varied exhibits proves a welcome diversion for the mechanical man after a long session of the convention.

There is always a certain number of motive power and car men who are unable to attend and there are also numbers who are unable to inspect the exhibits as thoroughly as they might wish, or perhaps it has not always been convenient to obtain just the information desired. So we have decided to have our own convention exhibit and have asked those interested in the manufacture and sale of railway equipment to furnish us with such information as they thought pertinent at this time. We have arranged this matter so as to give the essential points which are of interest to our readers and have divided it into some half dozen different departments. Each article has been headed with a title indicating the principal product or products of the firm represented and is illustrated as necessary. As at Atlantic City, it is not expected that all exhibits will prove of equal interest, but they have been so arranged that you may easily refer to the particular subject in which you are interested.

CAR ACCESSORIES.

Car Doors.

The Williams All-Service Car Door Co., Clinton, Ill.

A new car door manufactured by the Williams All-Service Car Door Co., of Clinton, Ill., will be exhibited at the Convention in space 401.

This Car Door is a combined grain door and outside door that does away entirely with the loss of grain and is practically indestructible. The saving in grain doors owing to the fact that none are needed will pay for doors installed

in each box car in a very short space of time, and the saving in grain lost in transit cannot be estimated because there is no way of getting at this information accurately.

Car Wheels.

The Nickel-Chrome Chilled Car Wheel Co., Pittsburg, Pa.

The "Third Annual Report of the Block Signal and Train Control Board to the Interstate Commerce Commission" calls attention to the fact that fifty years ago car wheels were made of cold blast charcoal iron, the same as was employed in making cannon for the Government. It was no doubt a superior material for making car wheels, but cold blast charcoal iron is a thing of the past. Charcoal irons are still made and used to a limited extent, but they are not equal to the brands of fifty years ago.

The only advance made by car wheel manufacturers has been by employing metallurgists to analyze the scrap car wheels, in order to insure a more uniform mixture. Nothing has been added to the mixture to increase its strength. The Board makes reference to the favorable results obtained by adding nickel, and says "The process seems worthy at least of careful investigation and trial." The same report says "The wheels, obviously, met the requirements of the M. C. B. drop and thermal tests." The drop test may be said to develop the "elastic limit" of a car wheel, that is, its power to recover its original condition after a shock. It also develops any strains there may be in the casting caused by unequal contraction in cooling. It is a well known fact that a car wheel is the most peculiar of all ordinary castings in the shrinkage strains to which it is subjected in cooling. If left outside the annealing oven for twelve hours it will tear itself in pieces. It must be placed in an annealing oven as promptly as possible after casting. It is claimed for nickel that it has a lower coefficient of expansion than any alloy known, and this has been demonstrated in every drop test made. It has been suggested that in order to get a stronger car wheel the proportions of the wheel be changed and its weight increased. This would be a sensible procedure were it not for one insurmountable difficulty. The railroads form a network of crossings and switches all over the country, and these will only permit of the use of a limited size of car wheel flange. To change the balance of the wheel and not change the flange in proportion would only invite increased disaster. On this point the Board of Train Control says: "It would be exceedingly difficult to improve the present type of cast iron wheel by modifying its form, and we may consider that which has been adopted as the one best adapted to meet the present general requirements, both of foundry practice and of service." In other words, the present form of chilled car wheel is all right, if it can be made strong enough to do the work.

An interesting fact has been developed in connection with a two-year trial of nickelized wheels under two radically different kinds of service. The 36-inch wheels used under heavy mountain service on locomotive tenders, developed "shelling out" spots, while the 33-inch wheels under 50-ton steel coal cars showed none at all. The difference seems to be entirely due to the action of the brakes. There is certainly no spongy place in a chilled iron surface, however much the steel wheel may be subjected to them, consequently there is no initial trouble of this kind to be developed. The tests seem to show that "shelling out" is due to brake action, which first burns the chilled surface, and then disintegrates it.

As showing rigidity where the materials are subject to wear and abrasion as in the flange of a car wheel, two wheels from the same axle, one a nickelized and one a standard chilled iron wheel, were tested under hydaulic pressure, a steel tool being used, shaped on the end to the curvature of the flange. The nickelized wheel broke at 70,000 pounds and the standard wheel broke at 54,000 pounds, making a difference of 66 per cent in favor of the nickelized wheel. In subsequent tests nickelized wheels withstood 90,000 pounds before breaking.

Under the drop flange test introduced by the Lobdell Car Wheel Company, the result was even better. The standard wheel gave out at an average of 12 blows, while the nickelized stood on an average 23 blows. This has since been run up to 37 blows, showing an advantage in the nickelized of 300 per cent.

This is of interest when it is remembered that the weak point of the ordinary chilled car wheel is the flange. The steel wheel has been introduced with all its deficiencies in wearing qualities and expensive re-turning or re-forging, solely because it is stronger in the flange than the ordinary chilled wheel. The above tests show that the nickelized wheel removes this difficulty, and that a strong flange can be obtained at one-third the cost of a steel wheel, on the basis of cost per 1,000 miles.

This "drop flange test," although it has not yet been adopted by the M. C. B. committee, will commend itself to all engineers of tests. It consists in letting a 21-pound weight fall 14 feet directly on the inside of the flange of the wheel; the same kind of shock to which the wheel is subjected in use.

The Brinnell test shows the comparative hardness of wearing surfaces as follows:

Wheels without nickel	485	495
Wheels with nickel	557	498
Steel wheel	223	

These figures give the nickelized wheel an advantage of ten per cent over the ordinary chill wheel and 170 per cent over the steel wheel. But in addition to hardness the nickel imparts toughness, and a nickelized surface will wear more than 10 per cent over the ordinary chill in this respect. This is brought out in the service test below where the nickelized wheels with less than one-half inch chill have made 60,000 mileage in two years, equal to seven years of ordinary freight wheel mileage and are od for 30,000 more. This can only be accounted for by the toughness imparted to the chilled surface by the nickel. The hardness of the tread is increased by adding chrome.

One hundred and fifty-six 33-inch nickelized chilled iron car wheels were placed under Berwind-White coal cars which carry the heaviest mountain traffic in the country. The service on these trains had proven too severe for the best standard chilled wheels and the use of such chilled wheels was abandoned; steel wheels being substituted at an extra expense of $10 per wheel. The test of the nickelized chilled wheels was made on a train fitted entirely with steel wheels, and was therefore as severe as could be made. After two years and two months some of the nickelized wheels have been withdrawn on account of wearing out. No flanges gave way, and the service performed was in every respect equal to that of the expensive steel wheel. The steel wheel on an average required turning after 30,000 miles and re-turning after the first and second 20,000 miles giving a total mileage of 70,000 miles as against the nickelized wheels at 65,000 miles and still running. This mileage can be increased by the addition of chrome and warrants the makers in claiming a mileage of 90,000 miles with no broken flanges. This is one-third the cost, on the basis of mileage, of the steel wheel, and 30 per cent cheaper than the ordinary $8 to $10 chilled wheel.

Seventy-eight 36-inch nickelized chilled car wheels were put under locomotive tenders on the Pennsylvania heavy mountain traffic, at the same time as the above 33-inch wheels. The wheels used under the locomotive tenders were 36-inch. While the service seems to have been much more severe than on the Berwind-White coal cars, causing many more brake burns, there was no indication of the wheels giving way in the flange in two years use, and no wheel broke in use.

The best steel for bearings used in automobiles has a propor-

tion of nickel and chrome. In the use of these alloys the makers are therefore not recommending an uncertain new element for car wheel mixtures. The idea has been advanced by some foundrymen that these alloys may be good for steel and not for cast iron. The answer to this is that the carbon in steel on which the advantage of the use of nickel in steel depends, and the combined carbon of the car wheel mixture, are precisely the same and are determined in precisely the same way by chemical analysis. The necessity of an alloy of some kind is evident from the fact that all known kinds of pig iron and scrap have been used in the endeavor to make a good car wheel.

Nickel and chrome are the lease expensive alloys on the market and the best known. They are the only ones that meet the difficulty of increased combined carbon in a remelted chilled car wheel. This is the troublesome element in the present mixture, and must be recognized and regulated if an improved chilled iron car wheel is to be made.

Much time has been spent by foundrymen in trying to get rid of sulphur and silicon, but these are harmless in comparison with the excess of combined carbon. From the annexed comparison it would appear that the best way to reduce the silicon and sulphur is by the use of nickel.

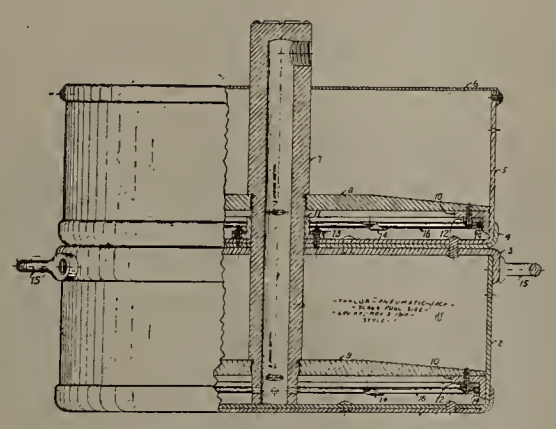

Cross Section, Taylor Jack.

From report Association of Manufacturers of Chilled Wheels to M. C. B. February 22, 1909.

	Sil.	Mang.	Phos.	Sul.	C.C.	Tensile Stgth.
Unnickelized Wheel	.68	.53	.38	.16	.80	29.300
Nickelized Wheel	.44	.46	.34	.13	.78	43.698

The nickel and chrome will come back in the scrap wheel so that for the purpose of exchanging an old wheel in part payment for a new one, no new procedure is necessary over the present practice. When 20,000 car wheels are needed for renewal and new cars daily, and the steel wheel makers are not able to furnish even 2,000 per day, the improvement of the chilled car wheels in strength even for ordinary service seems to be a great necessity.

Pneumatic Jacks.

Pneumatic Jack Co., Louisville, Ky.

As shown by the accompanying illustration, the jack is connected to the air pressure on the train line by means of a standard air brake coupling and as the air is always available, the time and labor of rebrassing is reduced to a minimum.

The material used in the construction of this jack is steel; pressed steel being used for the cups reducing the weight so that the jack weighs no more than other jacks now in daily use.

When the time and labor saved by the use of the pneumatic jack is considered, it is the cheapest tool on the market. Its simple construction at once attracts attention; there are no delicate parts to get out of repair, therefore the cost of maintenance is practically nothing. The jack can be operated by the most inexperienced person.

Besides the journal jacks of 12 and 14 inches, this company builds 18-inch car jacks, two of which, when placed on either side of a car just behind the trucks, will raise the car almost instantly, allowing the trucks to be taken out readily.

By referring to the sectional drawing the following description will be readily understood.

Parts Nos. 2 and 5 are superposed pressed steel cups 12 inches in diameter with smooth walls on the inside, into which work the boiler steel piston heads 8 and 9. These piston heads are securely fastened to the piston rod by means of threads with a split cotter running through the rod to prevent the possibility of the head working off. To the piston heads 8 and 9 are fastened the leather cup washers No. 10. The cups washers are forced into contact with the sides of Nos. 2 and 5 by means of an expansion spring No. 15, thus forming an air-tight joint.

The piston rod is made of cold rolled steel shafting with a three-quarter hole running almost through it, this hole conducts the air, allowing it to enter through the opening near the top. It then passes down and out through the one-eighth-inch hole in the rod into the space underneath the piston head.

Where the piston rod passes through the bottom of the top cup a small leather cup washer No. 11 is used, as this must be an air-tight connection.

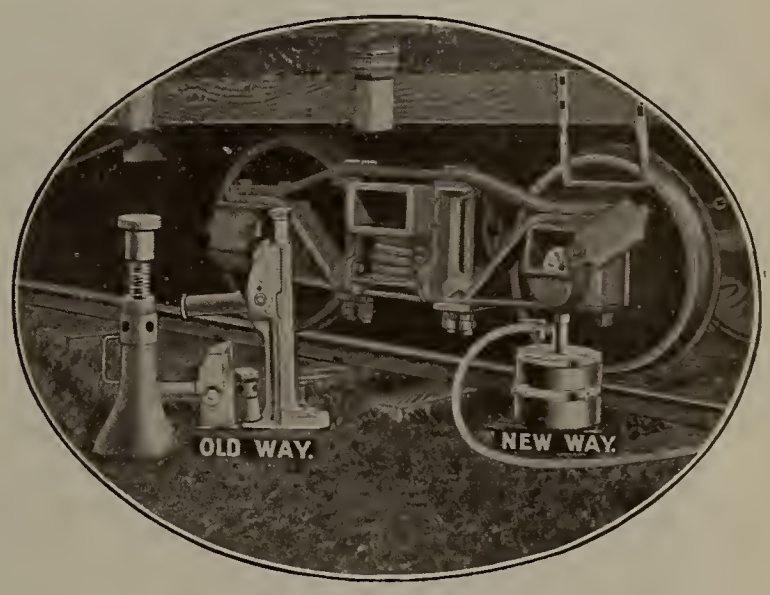

Taylor Pneumatic Jack.

No. 6 is a cover and is used only to prevent dirt from collecting in the top cup.

The supply of air is controlled by means of a three-way aircock. The one-eighth-inch holes shown near the tops of Nos. 2 and 5 are for the purpose of releasing the air when the piston has traveled the maximum height.

This precludes the danger of forcing out the heads, by admitting the air suddenly.

These jacks will be demonstrated at the Master Mechanics and Master Car Builders' conventions at Atlantic City, June 14-21.

Curtain Fixtures.

Curtain Supply Co., Chicago.

At the Atlantic City Conventions this year, the fixture which this firm is calling particular attention to is the ring No. 88 fixture, which is standard on the leading railroads and traction companies in this country and is one of the latest improvements in curtain fixtures. This consists of two rings in each tip which have a certain amount of play about three fixed pins and operate in such a way as to prevent the upward creeping of the curtain. Ring No. 89, or closed groove fixture, is adapted for those cases where it is not desired to take the fixture out of the groove.

In the exhibit will be a full-sized model illustrating and demonstrating vestibule diaphragm curtains equipped with No. 10 automatic release handle used in connection with No. 6 roller bearing hook. The combination of these two articles affords an efficient and reasonable releasing device, which is much needed in the case of vestibule passageway curtains.

There will also be exhibited for the first time at any railroad convention the "Rex" all-metal rollers. Also the special reinforced vestibule curtain roller and "Rex" steel window sash roller.

The exhibit will cover a full line of diaphragms, including CSCO and "Rex" types of both 6 and 4-pleat sections. With the diaphragms will be exhibited a full line of diaphragm hoods, including asbestos fire and water proof hood.

Car Doors.

The Chicago Car Door Co., Chicago.

This firm, which succeeds the Chicago Grain Door Co., will be represented at the Atlantic City conventions by its officers and will exhibit the new "Chicago" car door, together with safety brackets and other accessories. Its representatives have attended all M. M. and M. C. B. conventions since 1890, excepting the last two, and are going to demonstrate that they can "come back" and make good with their new car door.

Draft Springs and Weather Strips.

Frost Railway Supply Co., Detroit, Mich.

The Frost Railway Supply Co. will exhibit at Atlantic City the Harvey friction spring gear and the Detroit metal weather strip.

The Harvey friction spring gear, which is shown in the illustration, is made in the M. C. B. spring sizes of 6¼x8 inches and 8x8 inches, having a capacity in the former size of 150,000 pounds and in the latter size of 170,000 pounds. The Harvey gear is used in connection with any draft rigging or attachment using M. C. B. sizes of springs. The strength of the Harvey friction draft spring lies in its peculiar construction, the outer coil being elliptical in shape. The minimum recoil sufficient to restore it to its normal position is 17,200 pounds.

The Detroit metal weather strip is a permanent metallic strip for coach windows.

This company was organized February 1, 1905, and has exhibited at each Master Mechanic and Master Car Builders' convention held since that time.

Draft Rigging and Journal Boxes.

The T. H. Symington Co., of Baltimore, Md.

This firm will exhibit at the June conventions of the Master Mechanics' and Master Car Builders' associations the Farlow draft rigging in combination with twin spring and friction gears and Symington journal boxes as used on steam and electric railway car and locomotive equipment.

Harvey Friction Spring.

The Symington Company, of which T. H. Symington, ex-superintendent motive power of the Atlantic Coast Line R. R., is president, and W. A. Garrett, ex-president of the Seaboard Air Line, is vice-president, has been engaged in the manufacture and sale of railway supplies for the past ten years. During this time its members have been in regular attendance at the Master Mechanics' and Master Car Builders' conventions.

The new malleable iron foundry of this company, which is located at Rochester, N. Y., is now in complete running order and is probably the largest and best equipped plant of its kind in the world. It has a capacity of 125 tons of castings per day and is designed so as to enable its output to be double by making extensions. The plant is on the main line of the New York Central & Hudson River R. R. and the Buffalo, Rochester & Pittsburg Ry., and also on a branch line of the Pennsylvania R. R.

Car Cleaner.

Modoc Soap Co., Philadelphia, Pa.

The Modoc Soap Co., in its beginning, had the field entirely to itself, being the original and pioneer car cleaner company. About five years ago it changed the name of its product to the "Perfectol" car cleaner. The Modoc Soap Co., through its manager, Henry Roever, has studied the conditions of the railways thoroughly, and as an improvement would suggest itself by observation at the several cleaning terminals, such an improvement was at once incorporated in the Perfectol car cleaner. These improvements have made Perfectol very different from the original Modoc liquid car cleaner. It retains its emulsion as no other car cleaner does, and though slightly alkaline, does not affect the varnish as do the so-called absolutely neutral cleaners, which require excessive rubbing. It has been found by extended tests that it is this excessive rubbing that affects the varnish most. It has always been the aim of the Modoc Soap Co. to give the best for the least money, and at 48 cents per gallon, in barrel lots, Perfectol is one of the best car cleaner propositions on the market.

Insulation, Flooring and Fixtures.

General Railway Supply Co., Chicago.

Metallic (steel) sheathing is adapted for use as the exterior of passenger cars having an all-steel or wood framing. It is furnished in panels or slats of required size and fastened to the side of the car with rivets on steel frames and screws on wood frames. The panels are first applied along the lower stretch and the intermediate or insert slats are dipped in a mixture of oil and color and driven into position, completely hiding the heads of the rivets and screws, so that the method of fastening is in no way discernible on the exposed surface. The sheathing is furnished with two priming coats of paint, baked on, and is immediately ready when applied to the car to receive the body color and varnish. The sheathing is formed hollow, thus providing air chamber insulation.

"Resisto" insulation for passenger cars is a non-conductor of heat and is non-absorbent. It is made up in single and double thicknesses of one-quarter and one-half inch each, the single thickness for use with metallic steel sheathing and the double with ordinary steel plate sheathing.

"National" trap doors for passenger cars are made of pressed steel plates and are furnished in two styles: for elevated station platforms and for grade level platforms. If the door should accidentally become opened, the lifting device is so adjusted that the door only rises to an angle of 45 degrees, thus preventing passengers from falling through.

"Flexolith" composition flooring is a fireproof flooring and can easily be cleaned by flushing it with the hose or

water pail and mopping it dry. It is flexible, can be laid on wood or steel floors as desired, and is furnished in 1¼-inch thickness for baggage cars and ⅝-inch thickness for passenger cars. The latter weighs practcially the same as 3/16-inch yellow pine flooring.

"Imperial" window screens are made of bronze metal and are covered with copper-wire of fine mesh, which is held in the frame by retaining beads that can be easily removed from the grooves of the frame when necessary to renew the wire cloth or tighten the same. The slides on which the screens operate are fastened to the window-stop between the inside and outside sash and allow the screen to be raised to its full height.

Other fixtures handled by the General Railway Supply Co. are National vestibule curtain catches, which prevent the tearing of vestibule curtains, "Eclipse" deck sash ratchets and "Perfection" sash balances.

Two Views of Plant of Chicago Railway Equipment Co.

Brake Beams.

The Chicago Railway Equipment Co., Chicago.

The Chicago Railway Equipment Co. was organized in 1893; it then occupied a comparatively small leased building which accommodated both the offices and the factory. This company now owns and operates plants at Jersey City, N. J.; Marion, Ind.; Grand Rapids and Detroit, Mich., and Chicago, and has offices in London, New York City, Washington, D. C., Montreal, Can., St. Louis and Chicago. The general executive offices and the factory are located on the same site at Chicago, on the south side of 46th street. The shipping facilities of this location both for incoming and outgoing freight are ideal. Belt railway systems connect the spur track with all the railways entering Chicago.

The office building is a fireproof brick structure and the entire building is intended for offices, but the first floor not being needed for office room at the present time, is utilized for other purposes. The southwest room is fitted up with equipment, which represents a history of the evolution of the brake beam. This room will also be used as an exhibit room for the display of the products manufactured by the company. The southeast room, which is now used as a testing laboratory, contains a Riehle 100,000-lb. testing machine with adaptations for brake beam testing. With this machine, which is used for experimental and investigation purposes only, it is possible to test brake beams at any position they might be hung on the car. For example, by adjusting the testing machine heads the stresses that occur in beam hanging very near the rail may be accurately reproduced. The remainder of the first floor is occupied by a tool machine shop with the exception of the vault, which is used for tool storage.

The second floor is given up to office space entirely. In laying out these rooms the idea was to have an ante-room serve two private offices and then have all the offices connected by other means than through the main hallway. The office of the president and that of the secretary and treasurer have an ante-room in common. On the other side of the secretary's office is an ante-room, which serves also as a library, this room being intended for another private office. The general office is lighted by means of a skylight and side windows on the north and west.

On the third floor are the mechanical engineer and his staff. The draughting room is so situated that it receives light from the north in addition to the skylight, this; of course, being the best light for a room of this purpose. The location of the plant has made necessary a cafe, which is

Interior of Chicago Railway Equipment Co. Shop.

also located on this floor, together with a private dining room very attractively furnished.

The shop is of brick and steel construction and lies immediately back of the office, the only wood used being in the floor and roof proper, while the covering of the louvers is a composition roofing material.

The manufacture of brake beams requires a large storage space and a properly equipped assembling floor. All truss brake beams are tested before leaving the factory. The machine for this purpose is similar to the one in the testing laboratory, excepting that it is operated by steam, being for practical purposes rather than for precise or exact readings. The purpose of this test is to show up any defects that may exist either in the material or workmanship of the beam, and as the load put on the beam is greater than any it will be required to meet in service, the parts are so given a seating which makes the composite practically an integral structure.

Among the different products of the Chicago Railway Equipment Co. are the Monitor bolsters, which are said to represent the greatest possible strength for a given weight of material.

This company also manufactures the well-known Creco roller side bearing, which is a device of established reputation, having been in successful operation and service for thirteen years or more. The Creco roller side bearing is designed to relieve the strains that are developed with the old-style plain friction bearing and has a record of having materially reduced wheel flange wear, decreased cost of transportation and decreased cost of truck repairs. The Creco slack adjuster and brake release is also made by this company and is in general and successful service.

The principal product of the firm, however, is brake beams, and along this line it has a reputation of enviable success. This company manufactures the Diamond, Creco, Drexel, Kewanee, Sterlingworth, National Hollow, "96" and Monarch types of brake beams, and has recently produced the "P C Creco" beam for use with the all-steel heavy passenger equipment. The "P C Creco" beam is the Pullman Company standard.

The Creco type of beam is an evolution and improvement on the well-known National Hollow type, and the faults developed by the Hollow service have been corrected. It has the very valuable feature of offering flexibility in meeting requirements from the lowest to the highest demands.

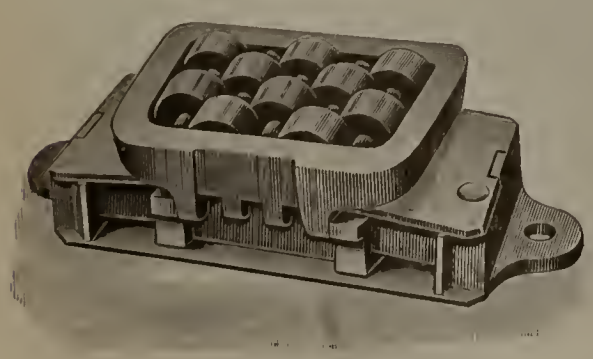

"Creco" Roller Side Bearing.

"Creco" Brake Beam.

LIGHTING AND HEATING.

Shop Lighting.

Cooper Hewitt Electric Co., Hoboken, N. J.

The exhibit of the Cooper Hewitt Electric Co. shows its standard type "H" automatic lamp; the double tube lamp, known as the "Double H," and the type "F" lamp.

The Cooper Hewitt lamp was invented and perfected by Dr. Peter Cooper Hewitt, of New York City, and was first offered for commercial use in 1902. On account of the peculiar color of the light the lamp was first looked upon as a "freak," and its practical use limited to illumination for photographic purposes, for which its large per cent of actinic rays especially fitted it.

Its extreme steadiness, freedom from glare and high efficiency immediately attracted the attention of engineers and scientists, who saw in this new light-source great possibilities. Practical trials of the lamp for regular industrial use soon developed the fact that its very peculiarity, its unusual color, was its strongest claim to serious consideration.

Dr. Steinmetz, one of the greatest living authorities on light and illumination, pointed out the fact that the absence of red rays was a distinct gain in point of optical effect, since such rays are irritating and exhausting to the optic nerves by reason of their greater energy.

It was soon discovered, also, that the color of the light gave a distinct gain in visual acuity, making fine lines and details stand out as if magnified. This quality is of special value in all inspection work, since it reveals small flaws and imperfections that would ordinarily escape observation, even under good daylight.

Gradually, as these qualities became understood, the value of the Cooper Hewitt lamps as a practical illuminant became recognized. Manufacturing facilities had to be constantly enlarging to meet the growing demand, until a year ago an entire new building was secured for the purpose in Hoboken, N. J., and already certain departments are crowded for room.

The Cooper Hewitt Electric Co. made its first independent exhibit at the conventions three years ago, previous to which time the lamps were included in the exhibit of the Westinghouse company.

Erecting and repair shops and locomotive works have been among the largest users of this form of light, the entire absence of dark or sharp shadows, and the distinctness with which all details on metal are brought out without confusing reflections, rendering the light especially acceptable for such purposes. It has been found in a number of widely different industries that Cooper Hewitt lamps properly placed are capable of giving an illumination which will secure the same output from operatives as under the best daylight.

In inspecting the exhibit of Cooper Hewitt lamps the test from the mechanic's standpoint is to look at some object containing fine lines or detail, such as a steel scale, and observe the ease with which they can be distinguished by the eye. It is also of interest to know how brilliantly blue prints stand out under this illumination. The illustration shows a type "H" automatic lamp.

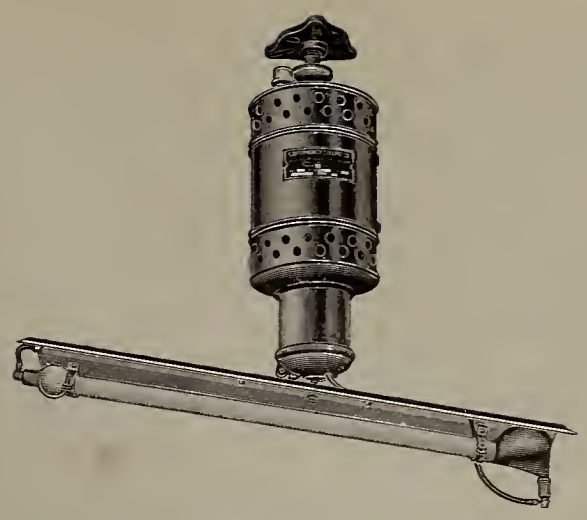

Cooper-Hewitt Light.

Signal Lamps.

The Dressel Railway Lamp Works, New York City.

The Dressel Railway Lamp Works, a photograph of whose factory is shown, is the largest establishment in the United States devoted exclusively to the manufacture of railway lamps.

The founder of the enterprise was George C. Dressel, who was the pioneer maker in this country of railway signal lamps. Prior to the time that Mr. Dressel became interested in the subject many of the lamps used in railway signaling were imported with the signal apparatus. He very early saw the field for improvement in signal lamps, and in 1881 embarked in the business of manufacturing them. Himself a thorough and practical mechanic of considerable inventive ability, he succeeded in securing the services of a limited number of careful men, and began in a modest way to interest railway officials in the product of his shop. The reputation that he established for careful and painstaking workmanship very soon enabled him to enlarge his small shop into a factory and to broaden his field. As time went on it became necessary to build a three-story and basement brick factory, shown on the left in the illustration. This proved to be inadequate, and in 1906 another and larger building, three stories high with basement, was erected adjoining it. Still further space being required, two additional stories were added to the new building in 1910.

The factory in its entirety now stands second to none in methods and machinery, as well as in sanitary and other arrangements for the health and comfort of the workmen employed.

Mr. Dressel very early associated with him his two sons and formed the present corporation in 1895. The founder died in 1899, and his son, Charles H. Dressel, passed away in April of this year, so that F. W. Dressel, now president of the company, is the only survivor of the original three who built the business up to its present proportions and recently celebrated the twenty-fifth anniversary of his connection with the company.

The firm has steadily advanced in all that appertains to the art of manufacturing signal and other lamps for railway uses, always striving to keep abreast of the times. It claims

Plant of Dressel Railway Lamp Works.

to be the originator of the round body lamps now in almost universal use. The Dressel no-chimney burner, which is today used by nearly every railroad in this country, and which has been imitated by makers of railway lamps and burners, was invented by the founder, as was also the sliding door, which is universally approved.

The Dressel Railway Lamp Works began to be officially represented at th M. M. and M. C. B. conventions fifteen years ago, and have not missed a year since that time. For about ten years they have had an exhibit of their products, and will be found this year in spaces 382 and 383 in the Exhibition Hall.

Car Lighting.

The Safety Car Heating & Lighting Co., New York.

No company engaged in the manufacture and sale of railway equipment is better known among railroad men than the Safety Car Heating & Lighting Co. and none has enjoyed a greater measure of success. Incorporated in May, 1887, for the purpose of selling lighting and heating equipment, it has maintained a progressive growth throughout the 24 years of its existence.

Pintsch gas is probably known to every man in railroad service. To comprehend the extent to which this system is today successfully operating, we must include the entire network of railroads covering our entire country, Canada and Mexico. The use of an inverted gas mantle in connection with the Pintsch lighting system during the past five years has given the railroads a threefold increase in illumination with decreased gas consumption and corresponding decreased cost.

Since the advent of Pintsch light, the entire equipment has undergone successive stages of improvement. The quality of the gas, the methods of supplying the gas to the cars and the fixtures have all been studiously improved and brought to their present state of perfection. A number of illustrations of the Pintsch light are shown herewith.

In the electric lighting field we also find this firm in the front ranks. Its axle driven dynamo equipment is designed and built with the same strict adherence to every detail and to ensure the greatest service with the least attention and lowest cost for maintenance.

From all reports received of the Thermo Jet car heating system there is ahead of it a great future. For maintenance of uniform car temperatures under any condition, no system is so well adapted as Thermo Jet, and with scarcely any attention the long-looked-for comfortably heated railway car seems to be within sight. This system is another success attained by the Safety Car Heating & Lighting Co., and with its Pintsch equipment, electric equipment and both gas and electric fixtures gives it a prestige in the field of car heating and lighting which few companies enjoy.

Making Pintsch Mantles.

The Safety company's booth has long been an attraction at the M. M. and M. C. B. conventions at Saratoga, Manhattan Beach and Atlantic City, and will be open again this year to its railroad friends and those seeking enlightenment on these various devices.

OILS AND PAINTS.

Varnish.

Berry Brothers, Ltd., Detroit, Mich.

Among the greatest producers of varnish in the country is the house of Berry Brothers, Ltd., at Detroit, Mich. This firm rose from the most humble origin, the business being established in 1858 by Joseph N. and Thomas Berry on a modest scale. It speedily grew, however, and has kept on growing until the present factory is one of the show places of Detroit.

The establishment of Berry Brothers consists of factories and offices at Detroit and Walkerville, Ont., the latter to take care of their large Canadian trade, and branch houses at New York, Boston, Philadelphia, Baltimore, Chicago, Cincinnati, St. Louis and San Francisco. The factories are shown in the accompanying illustration. The combined storage capacity at the Detroit and Walkerville works is one and a half million gallons of varnish.

A Familiar Type of Pintsch Lamp.

The Pintsch Mantle.

Modern Inverted Mantle Lamp.

Unscathed by panic or financial disaster, the house of Berry Brothers has weathered every storm and is recognized as one of the soundest and most reliable commercial houses in the country. The death of Joseph H. Berry, the founder of the house, three years ago, was a sad blow to his many friends. All the old traditions on which the house of Berry Brothers was built are preserved and maintained by the surviving partner, Thomas Berry, and the present officers of the company. The business policies are also earnestly supplemented by the various heads of departments, most of whom have been connected with the house for a long time and whose interest in the successful conduct of the business is based upon personal regard for the house as much as for interested motives, and with such an "esprit de corps" no house can do otherwise than prosper.

The general managership of this concern is in the hands of J. S. Stevenson, who has been connected with the house upwards of a quarter of a century, and known varnish in all its phases. Mr. Stevenson is withal a chemist of wide attainments, and has the executive ability necessary to maintain the general equilibrium of the institution.

At the Atlantic City conventions Berry Brothers will be represented in their usual friendly way and will take advantage of the welcome opportunity of greeting their many friends. A unique collection of varnish gums in their natural state will enhance the educational value of the exhibit.

Oil.

Galena Signal Oil Company, Franklin, Pa.

This company has always manifested a strong interest in the Master Mechanic and Master Car Builders' Associations, and some of its officers for the past ten years have regularly attended the conventions. This year will be no exception and the company will be represented at Atlantic City by three officers, about ten experts and seven salesmen. They will, however, make no exhibit of their products, but will have a reception booth on the pier, where they will be prepared to extend hospitalities to their friends.

Plant of Berry Bros.

The Galena-Signal Oil Co. was the first to manufacture and introduce a successful mineral valve oil. It displaced the high-priced and destructive animal fats previously in use and thus saved vast sums for the railroad companies. It also manufactures Perfection signal oil, for use in railway lamps and lanterns. There has never been known a single case of wreck or accident due to the failure of this oil to perform properly its work.

Within the past few years since trolley lines have grown to such magnitude and importance that the company has established a department to look after the lubrication of electric street and suburban railways, including both rolling stock and power house equipment. The business of this department has increased far beyond its expectations, and at present many of the large interurban railway systems of the country are under contract. The same results follow as with the steam roads, viz., better service and lower cost.

The Galena-Signal Oil Co. is probably one of a very few concerns in the lubricating oil business to organize and maintain a highly-paid and skillful force of mechanical experts and chemists to consult with and advise the managers of railways and to supervise the proper handling of lubricants in actual use under the great number of exacting conditions.

Paint and Varnish.

John Lucas & Co., Chicago.

The Lucas exhibit at the conventions will consist only of a large electric sign which has been displayed for several conventions on the end of the pier. This is more expensive than an exhibit, but the firm feels it is a great deal more satisfactory, especially for a line like paints in which there is really little to exhibit.

John Lucas & Co. is probably the oldest house in the paint business as well as one of the two largest. It has been in business for more than seventy years and has been working the railway trade and attending conventions for a great many years.

LOCOMOTIVE EQUIPMENT.

Fittings.

Adreon Mfg. Co., St. Louis, Mo.

Among the important specialties handled by this firm are Acme pipe clamps, Security lock-up valves, Security bell ringers, American gravity couplings and the Campbell graphite lubricating system. Acme pipe clamps provide a metallic bearing entirely around air brake and heating pipes, thereby preventing rattling and breakage. The Security lock-up valve is a compact device for sounding a warning whistle or applying the brakes from the rear platform when backing in or out of terminals. The whistle valve allows only a small amount of air to be used and brake valve will apply the brakes as gradually or as quickly as may be desired.

The Security bell ringer consists of a rigid piston and movable cylinder, the top of which is crown shaped for contact with roller. All toggle joints and other adjusting rods are dispensed with, so that when bell cord is used the bell ringer is not brought into action. The working parts are entirely protected from cinders and the annoying consequences from snow or water freezing as in open top bell ringers, and by excluding these elements the life of the bell ringer is greatly prolonged.

American gravity couplings are made of malleable iron and after machining are copper-plated, which gives them a neat appearance and prevents rust. It has no threads to strip, as the pressure is applied by sliding the two parts together along a wedge-shaped groove. It can be coupled and uncoupled instantly and will tighten with vibration.

The Campbell lubricating system consists of a cup holding about one pound of graphite, placed in the locomotive cab, convenient to the engineer, and connected up by means of a ⅜-inch pipe with main air reservoir. Another ⅜-inch pipe extends from cup to special dividing tee, located directly back of the center of cylinder saddle, from which ¼-inch pipes extend, and are tapped into each relief valve. With lever handle in running position a charge of about one-half teaspoonful of dry graphite is projected to valves by shifting handle from running to charging or application position, and on return of handle another application can be made immediately if desired.

Wheel Flange Lubricator.

The Collins Metallic Packing Co., Philadelphia, Pa.

The Collins "Improved" wheel flange lubricator is simply an improvement over the old one, which was a success, and which is used on many of the railways in this country, as well as in Porto Rica, Australia, Canada and Mexico. It differs from the old device in being equipped with a continuous feed device, which obviates the necessity of attention to the stick every 200 or 300 miles of locomotive travel, which was necessary with the old device.

The stick under varied tests has given a service from 3,000 to 6,000 miles, depending on the curvature of the road and the class of power to which the device is applied. It requires less than a minute's attention to insert a new stick, and there is an indicating device on the back of the lubricator, which can be seen at a distance of ten feet from the locomotive, and at a glance one can determine the amount of the stick that is worn and the amount remaining for service, so approximately the lubricating device requires but a minute's attention while a locomotive is in service for a month.

Many of the railways having but a few of the lubricators on, claim a great saving not only in flange maintenance but also in rail wear. The saving resulting from a complete equipment of the locomotive could only be conjectured.

The lubricating device itself will last as long as a locomotive. The lubricant is a solid and not a liquid. It does not get on the tread of the wheel and create slipping and does not fly off. The design of the lubricator is shown in the accompanying illustration.

Packing.

Crandall Packing Co., Palmyra, N. Y.

The Crandall Packing Co. has been in business about twenty-five years, which goes to show that its products have stood the test of time. The packing is made in a large number of sizes and styles for steam, hot water and ammonia. One of the styles which is a radical departure from the ordinary varieties is the "lip" hydraulic packing. This has a flexible lip which faces the direction of fluid pressure and is crowded against the rod by this pressure. Thus the greater the pressure, the tighter the joint. The firm has for a long time been developing a metallic packing and have now placed upon the market a packing which they feel is worthy of the name of "Crandall." The Crandall company also carry a large line of gaskets, sheet packing and pump valves.

Valve Gears.

The Hobart-Allfree Co., Chicago.

Although the convention of 1911 is but the second at which the Hobart-Alfree Co. has exhibited its specialties, the system of steam distribution which they advocate has been before the railway world for a number of years.

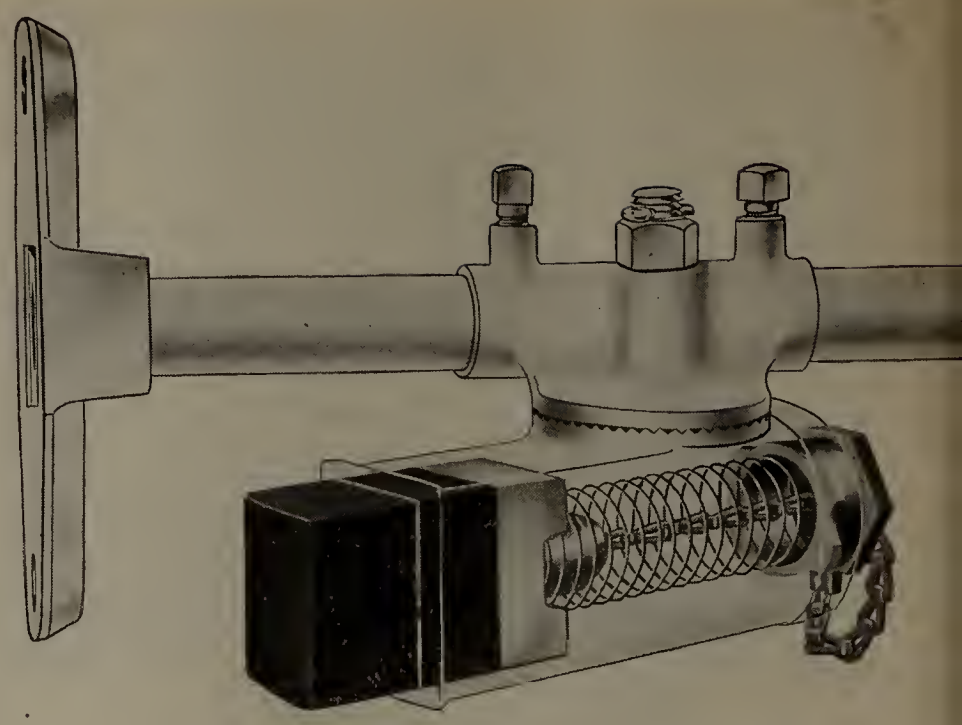

Showing Construction of Collins Flange Lubricator.

As in stationary practice the Corliss type of engine exemplifies the highest attainments in economical production of power, so in locomotive practice the Allfree system of steam distribution makes possible the utilization of the maximum amount of energy of the steam while in the cylinders, resulting in increased power, greater speed and a considerable reduction in fuel consumption. These desirable results are not obtained through any complicated mechanism, but by properly proportioned cylinders, the valves of which control not only the admission of steam to the cylinders, but by a simple arrangement the exhaust and compression events are so timed that back pressure or negative power is reduced to a minimum.

The working model of a 4-4-0 type passenger engine, which forms part of the company's exhibit, shows to advantage the simplicity of the Allfree equipment. The admission and compression valves are operated by the Allfree radial valve gear, which is offered as a substitute for the Stephenson link motion, but other outside gears are admirably adapted for this purpose, the Walschaert type being extensively used in combination with the Allfree equipment.

The company's exhibit this year is devoted exclusively to the locomotive branch of their business, although they are large manufacturers and dealers in derailers, car replacers and other well-known railroad appliances.

Metal Hose.

Pennsylvania Flexible Metallic Tubing Co., Cleveland, O.

Flexible copper tubing or metal hose is extensively used in the roundhouse as a blower connection, and for connecting locomotives with pipe line to boiler washing system. The standard size on the blower line is ¾ inch; the most satisfactory method for conecting is obtained by attaching a 7 or 8-foot length of the tubing to a ¾-inch pipe which is suspended from the main steam line overhead. Under this arrangement the valve is connected directly to the main line and is operated by a rod sufficiently long to be reached from the floor. This is shown in the accompanying photograph. This has proved the most satisfactory and permanent arrangement possible, doing away with the continual replacing expense of rubber hose and eliminating the danger from breaking and continual leakage of steam which is found in the use of flexible joints.

The size in most general use for connecting up with washout plant is 2 inch, inside diameter. As the pressure in this case sometimes exceeds 200 lbs., the use of rubber hose of flexible joints has proven both unsatisfactory and dangerous.

As shown in the cross-sectional view, metal hose is made from a continuous length of especially prepared copper or galvanized steel tape, sufficiently ductile to stand the necessary sharp bends required in forming the "interlocking joint." This construction, with its four compactly set walls, almost eliminates the possibility of damage from outside sources. As the hose is made to stand several times the present highest steam pressure the danger from breaking from this source is also eliminated.

The manufacturers are now experimenting with a flexible steam connection between cars which will not change the M. C. B. standard.

Valve Gears.

Pilliod Brothers Co., Toledo, O.

Pilliod Brothers, composed of C. J. Pilliod and H. J. Pilliod, commenced operations May 1, 1910. A model of the Pilliod gear was exhibited at the 1910 M. M. convention and the gear will also be exhibited at this year's convention.

The first gear was applied to engine 91 of the Detroit, Toledo & Ironton R. R., and the engine was put into service on October 29, 1910. January 15, 1911, the business was transferred to the Pilliod Brothers Co., a corporation, and the factory for the manufacture of the gear was put into operation February 1st.

Lubricators.

Detroit Lubricator Company, Detroit, Mich.

The Detroit Lubricator Company will exhibit a large number of lubricators at the Master Mechanics' Convention in space 598. lubricators.

Pennsylvania Flexible Boiler Hose.

Showing Interlocking Construction of Pennsylvania Hose.

A new "Transfer Filler" described below will be shown attached to the No. 22 lubricator and will be operated in the space. The force feed oiler will also be shown in operation pumping oil under working conditions.

The Detroit transfer filler is a device which allows the lubricator to be filled at any time while in service. Regardless of whether the locomotive is working under steam, drifting or at rest, all that is necessary it to open the water inlet and oil outlet valves in the transfer filler.

Immediately the water which has replaced the oil in the oil reservoir of the lubricator and the oil in the transfer filler change places. There is no necessity of shutting off the boiler pressure or closing the water valve and feeds. All that is required is to open two valves in the filler before the transfer is made and close them after the oil has disappeared from the gauge glass in the transfer filler.

The transfer filler fills a need felt for a long time. Frequently the location of the lubricator and the presence of cut valve seats have made past and present methods of filling a lubricator—although necessary—a wasteful and bothersome process.

The Detroit transfer filler eliminates delay, trouble and waste in refilling the lubricator. It is positive insurance against dry and cut valves caused by the lubricator becoming empty before a station or other stopping place is reached. It can be attached not only to Detroit Lubricators, but to any lubricator.

The Detroit transfer filler consists of a reservoir of about 43 ounces or three pints capacity with two valves, one near the bottom controlling the admission of water and the other at the top on the opposite side controlling the oil exit. Although both connections are at the top, the water is conducted through a passage drilled in the wall to the bottom of the Transfer Filler before being released. A filler plug is provided at the top and a drain cock at the bottom. A gauge glass shows when all the oil has left the transfer filler. Two pipe connections for attaching to the lubricator

Detroit Transfer Lubricator Filler.

are furnished. On every transfer filler is a metal plate giving complete directions for operation.

Injectors.

Wm. Sellers & Co., Philadelphia, Pa.

William Sellers & Co. was established in 1848, and during the 63 years of its existence has introduced many improvements in machine tools. These include machinery for the transmission of power, new principles in the construction of planers, lathes, boring and turning mills; also the development of hydraulic machinery, traveling and jib cranes in special and standard forms.

It also introduced into this country the original injector invented by Henry Giffard, and by means of an efficient experimental department modified the original design to suit American practice and developed it in efficiency and certainty of action to keep pace with the requirements of railroad service.

The necessity for automatic adjustment resulted in the invention and patenting of the self-adjusting injectors of 1865 and 1876, and in later years the automatic feature was included in the well-known Sellers self-acting injector, in which all moving parts were omitted. This form is manufactured in various styles to meet the needs of locomotive designers and the practice of various railroads.

In the same period essential modifications were made in boiler checks, including the introduction of the stop valve feature, by which the main check and its seat may be removed for regrinding or repair while the boiler is under full working pressure.

Its exhibit includes a complete variety of locomotive and stationary injectors, main check and steam valves, as well as strainers, boiler testers, washers for round house service.

We illustrate the form known as Class N improved, the standard injector of William Sellers & Company, for locomotive, stationary and marine service.

Vanadium Alloys.

Vanadium Sales Co. of America, Pittsburg, Pa.

The use of Vanadium steel for parts of locomotives is

"Class N" Sellers Injector.

being standardized by the largest railroads of this and other countries largely because of the increased strength and durability of these metals and especially on account of their superior dynamic qualities. It has proved particularly successful with frames and bells. The exhibit of the Vanadium Sales Co. at the June conventions at Atlantic City will include locomotive side rods, piston rods, cylinders, axles, bushings and other parts of Vanadium cast and forged steel.

Fire Boxes.

Wm. H. Wood Loco. Fire Box & Tube Plate Co., Media, Pa.

This company was organized by Wm. H. Wood, mechanical engineer and builder of special and hydraulic machinery. Mr. Wood has been in business over 21 years and is well known for his productions in boiler shop machinery, as well as being the engineer who designed the hydraulic machinery for the Fox Solid Pressed Steel Works, at Joliet, Ill. which was the nucleus of success for that works afterward absorbed by the Pressed Steel Car Co.

The above company has been organized about three years and will have its second exhibit at the Master Mechanics Convention at Atlantic City this June; exhibiting a complete firebox and tube plates for Atlantic Coast Line boiler for engines 272 and 274. Strains are neutralized by its special formation and the number of staybolts is reduced by some 350.

Hose Bands.

William Yerdon, Fort Plain, N. Y.

William Yerdon first put the Yerdon hose bands on the market about 1890 and they have enjoyed an increasing popularity with all hose users since that time. For a number of years after introducing them to the trade, Mr. Yerdon

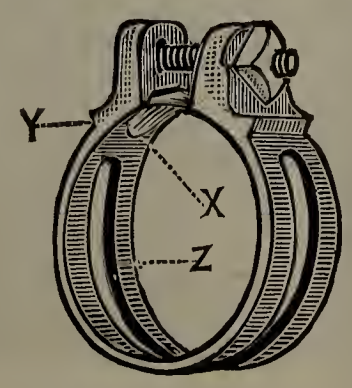

Yerden's Standard Hose Band.

Showing Strength of Yerden Band.

was a familiar figure at many of the Master Car Builders' and other railway conventions until ill health prevented him from attending. Mr. Yerdon passed away on the 19th of last March but the business is being continued under the same name and under the management of J. E. Barker. The firm will probably be represented at the Atlantic City conventions this year by Mr. Yerdon's son, L. B. Yerdon. One of the strong points of this hose band is the tongue, marked X in the smaller illustration. This forms a complete circle and prevents the hose from buckling at this point.

SHOP EQUIPMENT.

Lathes, Shapers and Drills.

American Tool Works Co., Cincinnati, O.

The American Tool Works Co. will have a large exhibit of machine tools at the Atlantic City conventions this year. These will be in operation at their space in Machinery Hall and they are of especial interest to railroad mechanical men. Some of the more important machines are described and illustrated below.

The 42 in. American high duty lathe with motor drive is new in design and embodies many exclusive features of practical value. In designing these machines special attention was given to eliminating all superfluous parts and loose running members and to the scientific distribution of the metal throughout the machine. As a result these machines

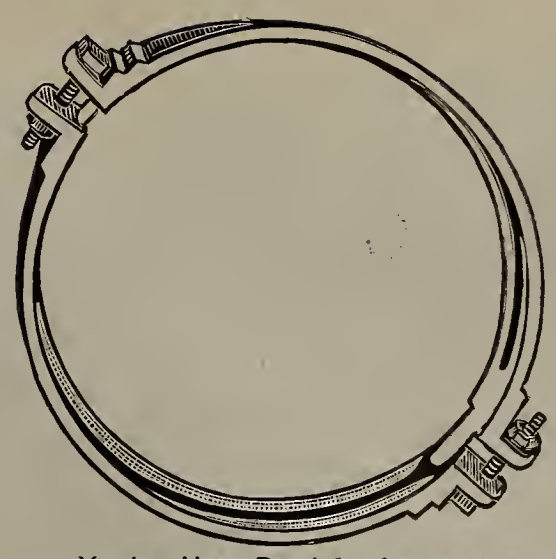

Yerden Hose Band for Large Hose.

are of ample rigidity to resist the severest strains and, due to the reduction in the number of running parts, a minimum of power is lost in transmission.

The lathe shown herewith is the patented geared head type which affords 16 spindle speeds. The 16 spindle speeds afforded are obtained through the medium of only 17 gears. These changes can be made instantly without stopping the initial drive of the machine, by manipulating the levers and hand wheel on the front of head, which operates the sliding gears and a positive jaw clutch of the selective type.

Another point of particular interest is the unusually high head ratios, which, in addition to the number of spindle speeds, permits the use of a constant speed motor, either of the direct or alternating current type. It is driven by a 20 h. p. motor running at 1,200 r. p. m., and affords a maximum reduction between the motor and spindle of 600 to 1. A high

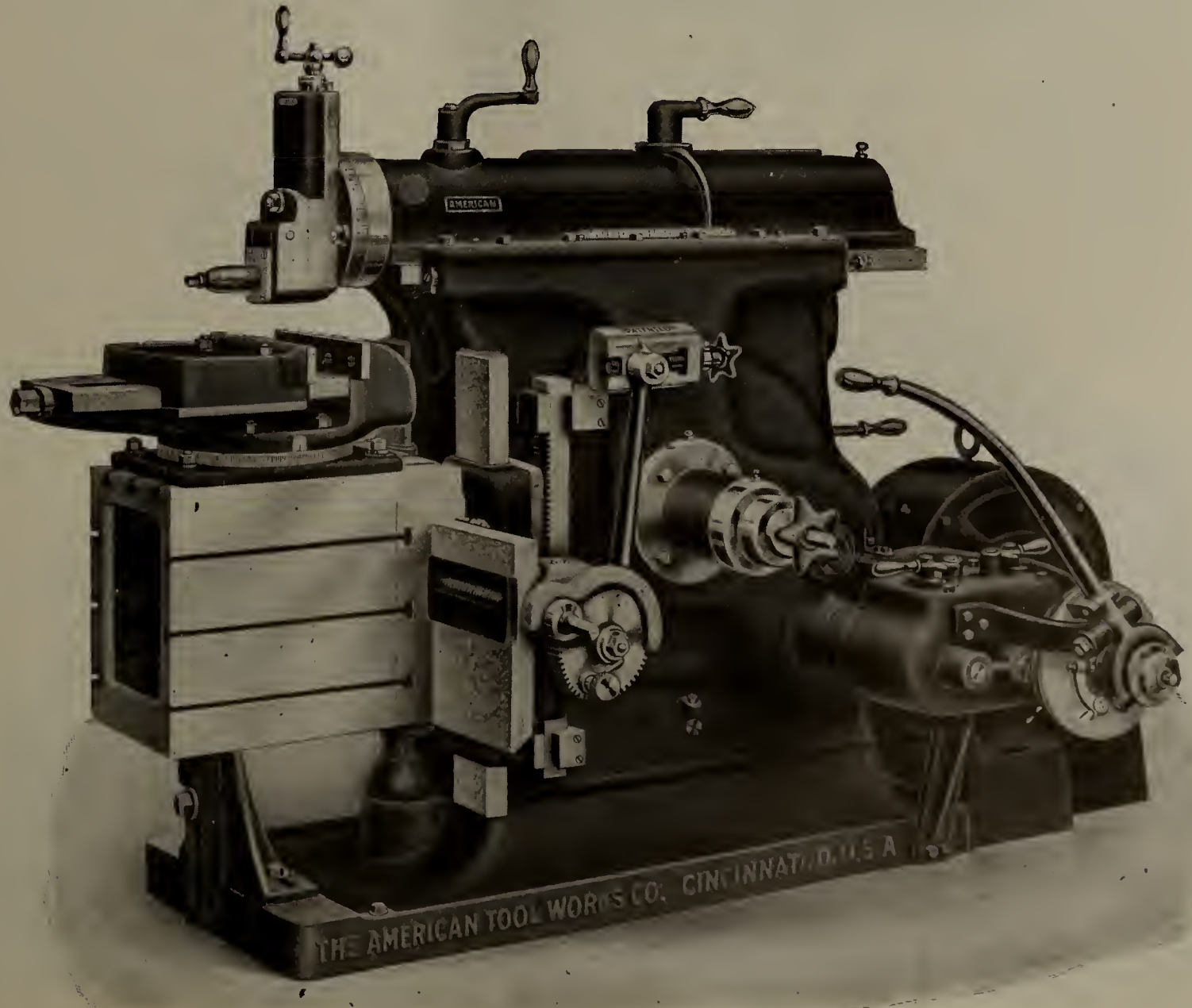

American 24-Inch Shaper.

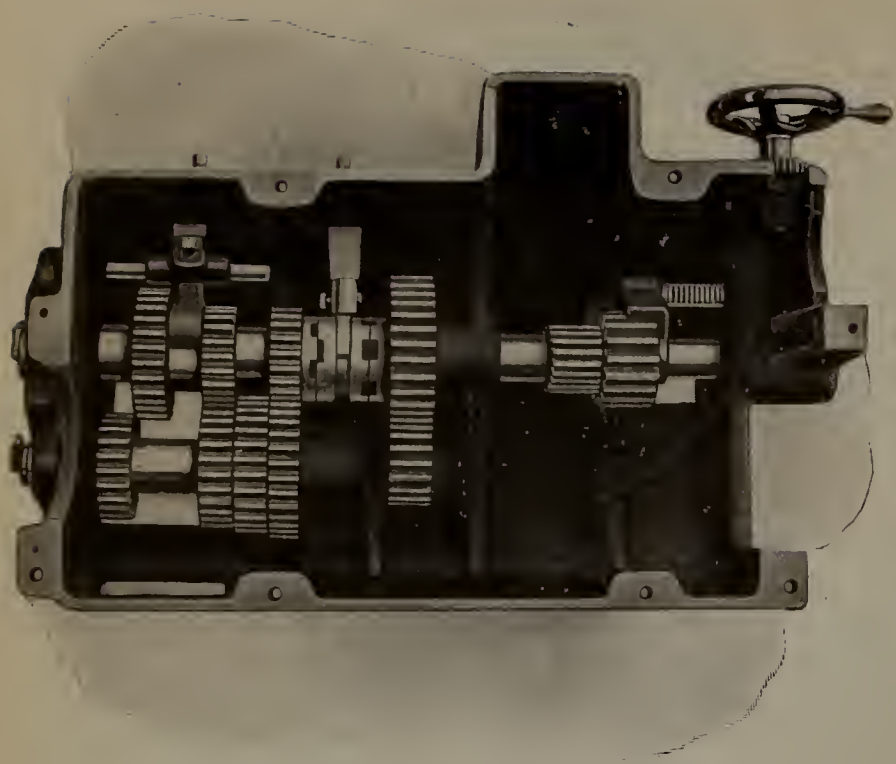

Upper Half of Geared Headstock Inverted.

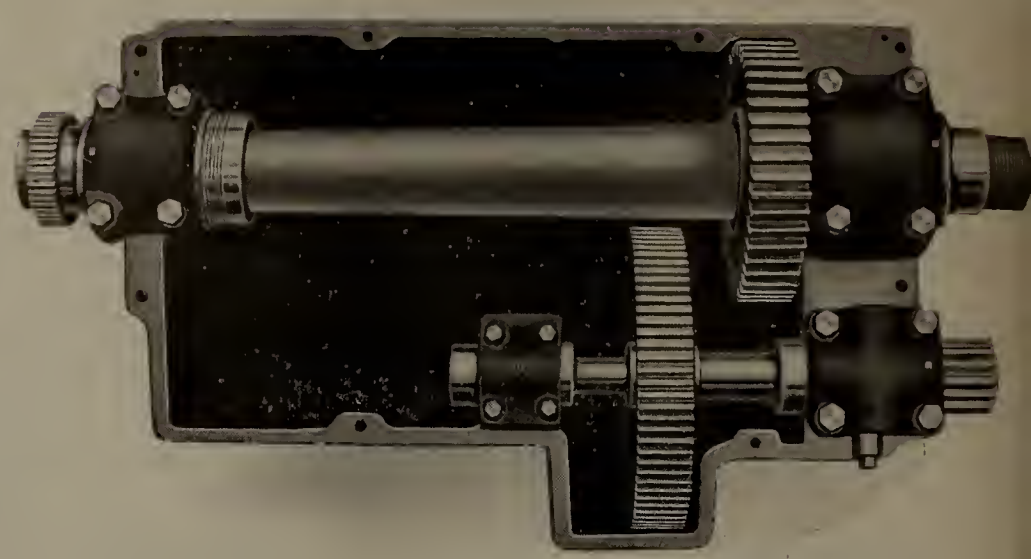

Lower Half of Geared Headstock.

speed motor of this type is much less expensive than a low speed or variable speed motor.

The method of motor application is also worthy of mention. The motor is mounted on a planed surface on top of headstock and connected to driving shaft by means of spur gears, only three gears being used for connecting armature to driving shafts. A powerful friction clutch, operated by the drop lever at end of head, is incorporated in the motor gear, by means of which the gears in the head can be stopped and started instantly without interfering with the motor speed. 50 per cent of the spindle speeds are obtained through the face plate drive. This feature can be found only on "American" high duty lathes and is of particular value as it relieves the spindle of a great deal of heavy turning on large diameter work.

The feeding and screw cutting mechanism is most complete and efficient. It regularly provides 48 changes for threading and screw cutting, varying from ½ to 28 threads per inch, and feeds from 4 to 224 cuts per inch. Any thread or feed not shown on the index plate can be obtained by supplying the correct gear or gears on the auxiliary quadrant, which is located on the end of the bed. The one distinctive feature of this mechanism is that which eliminates the necessity of speeding up to cut the coarse threads. The coarse threads are all obtained through the cone and tumbler gears in the box and at no time does any member of this box run faster than the driving gear. A number of railroad shops are using these lathes and find them more than satisfactory.

The 24-in. "American" shaper, motor driven through a speed box, is unusually substantial and will develop exceptionally high power at the cutting tool. These features adapt this machine to the heavy duty requirements of a railroad shop.

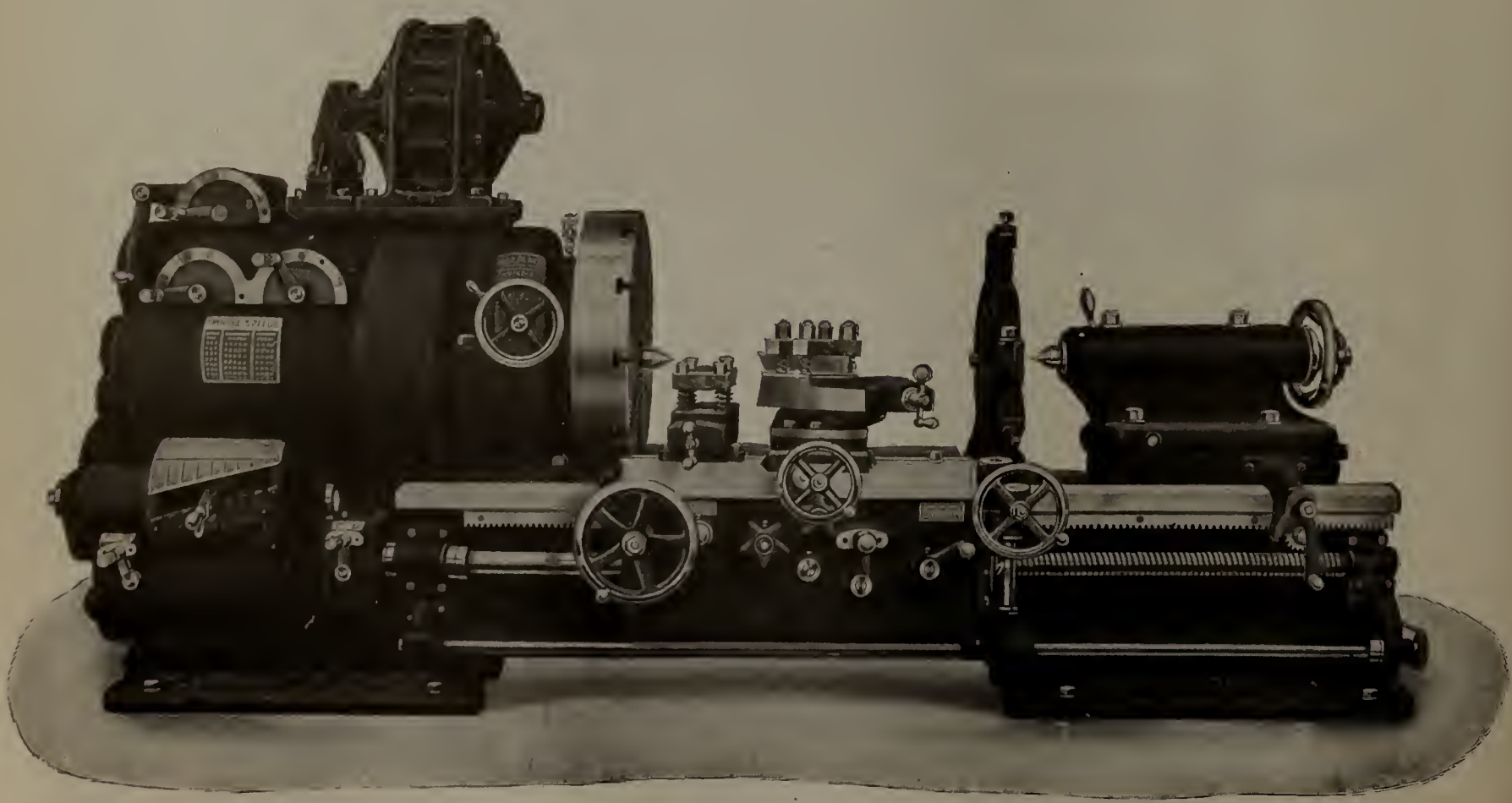

American 136-in. x 42-in. High Duty Lathe.

The back gear construction of this shaper affords two geared speeds which in combination with the four speeds obtained through the speed box produce eight cutting speeds to the ram. One of the notable features is the patented link connection between the ram and rocker arm which draws the ram down on its bearings, thus insuring a permanent full length bearing, long life and accuracy. Full length taper gibs having end screw adjustment are supplied in all flat bearings. The feeding mechanism is of patented construction. It affords 25 rates of power feed to the table, each feed being indicated by a graduation on the slot head. Feed changes can be made instantly while shaper is running, and the entire mechanism is located most conveniently for the operator. An automatic stop to saddle is supplied which prevents breakage of the feed gears should the saddle be allowed to feed in to the rail.

The following description is devoted to the more important features of "American" radials. The head of the American radial is triple geared, providing one direct, one reduced and one double reduced speed. The tapping mechanism forms a connection between the arm shaft and the triple gears and is situated so that the power is transmitted through it before any of the head reductions take place. This insures a high velocity to the frictions under all conditions. The frictions are the patented double band type. This mechanism is controlled by a lever conveniently operated from the front of the head, by means of which the spindle can be started, stopped and reversed without interfering with the initial drive.

The column is of the double tubular type. The outer sleeve has a bearing at the top and bottom, and rests on hardened and ground conical roller bearings, which makes the swinging of the arm extremely easy. A patented "V" clamping ring is used to bind column and sleeve. This speed box is of the cone and tumbler construction, consisting primarily of a cone of four gears and a compound tumbler gear. Eight changes of speed can be obtained through the box which in combination with the triple geared head mechanism provides 24 spindle speeds by the use of only 13 gears. This wide range of spindle speeds, together with the simplicity of the speed changing mechanism is one of the valuable features of "American" radials. Changes are made without shock to the gear box members, as the cone gears are kept rotating which changing speeds by means of an auxiliary drive between the pulley and cone shaft, which operates through a friction, automatically engaged and disengaged by the raising and lowering of the tumbler lever. A notched plate also prevents the shifting of the tumbler lever until the auxiliary drive is engaged. The auxiliary drive is used only while changing speeds.

The driving gears used in the mechanism are made from a special grade of steel, carbonized and hardened by a special process and are cut with Brown & Sharpe 20 degree involute cutters, which form a substantial tooth, pointed at the top and wide at the base. Experience has proven this to be the proper form of tooth to use in a tumbler gear mechanism, as it permits the instantaneous engagement of the gears while running without shock, clashing or danger of breakage. A shock absorber located between the gear box and the initial driving gears in the base of the column, absorbs all shocks and strains, thus insuring long life to the gear box members.

When arranged for motor drive a constant speed motor is mounted on an extension to the base and direct connected to speed box through spur gears.

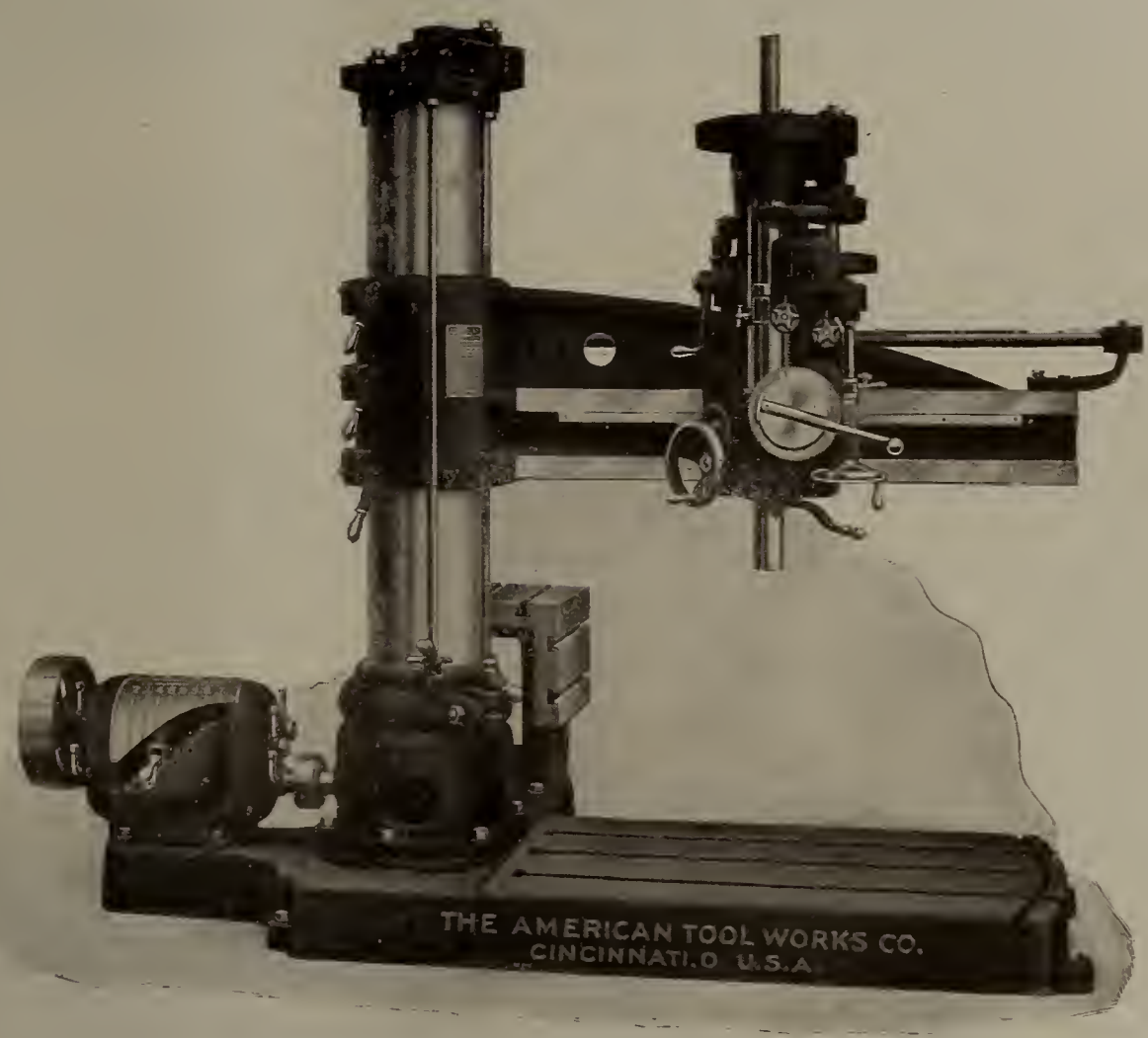

American 6-ft. Radial with 8-Speed Box for Belt Drive.

Shapers.

Stockbridge Machine Co., Worcester, Mass.

The illustration is a Stockbridge Machine Company's 16-inch single geared shaper with special attachments, filling almost every possible requirement of shaper for toolroom, or die work. A special feature is the power rotary feed to tool slide, which is mounted on top of ram. The head is revolved by worm and worm gear, the worm being connected to pawl

shown on the side of ram by a train of gears. The pawl is reciprocated by a dog, dog being adjustable along ram gib and can be set to give any required amount of throw to pawl; the amount of throw to pawl determining the amount of feed to worm gear. The worm can be rotated in either direction and is so constructed that when desired, head can be rotated by hand. When the rotary head is not in use, it is locked to ram head by means of two bolts on either side of head.

The head slide is provided with an automatic stop for the down feed which will be found of advantage in duplication of parts. It prevents the tool from feeding down too far and spoiling the work, and also allows the operator to attend to other work while machine is running.

The head slide is also provided with automatic feed either up or down. The amount of feed is regulated by the position of a dog on ram gib. Micrometer on down feed screw is graduated to read to .001 of an inch and can always be set at 0. If desired, feed to slide can be operated by hand. The swiveling knee with two working sides is revolved by worm and worm gear through an arc of 90 degrees in either direction. One side is made to tilt for planing angles and is especially useful in die making.

This shaper has the Stockbridge patented two-piece-crank giving a quick return of 3.5 to 1, and an even cutting speed the entire length of cut. This quick return is also maintained on short strokes.

Lathes.

Acme Machine Tool Co., Cincinnati, O.

Two "Acme" machines of especial interest are the combination turret lathe, the brass working turret lathe and the screw machine. They are shown in the illustrations. The combination turret lathe handles bar work up to 2¼ in. diameter and 26 in. long, with the bar outfit of tools, also forgings and castings to 12 in. diameter with the chucking outfit. The head is cast solid with the bed, insuring great rigidity, and is provided with friction back gears and three step cones for 3½-in. belt. The spindle is of high carbon hammered crucible steel. All bearings are ground and hand scraped. The bed rests on three points, avoiding all twisting action.

The chuck is opened and closed while the machine is running by means of the long lever shown at front of head, which lever also operates the roller feed. The important features of this chuck are that the work does not have "End Motion" when the chuck is closed, making it possible to do second operation work, requiring exact shoulder length, and the jaws do not overhang, allowing short work to be gripped without tilting the jaws.

A roller feed of improved type is used to feed the stock, the centering jaws and rolls are operated together automatically. Any section of bar can be fed round, square or hexagon. The same lever that closes the chuck operates the roller feed.

The turret is mounted on a cross slide of generous proportions, the lock bolt works in hardened and ground taper bushings directly under the cutting tool. This construction has been adopted as giving the most rigid tool support, as the pressure of the cut on the tool on turret is downward, making a practically solid support. An oil hole is provided under each tool space for use with oil tube drills, etc., in addition to the regular oil pipe.

The cross slide moves on a narrow dovetail guide with a gib for taking up wear, and has hand and power cross feed in both directions with large micrometer dial. Independent adjustable stops are provided for each tool on turret. These stops are convenient to the operator and can be used in any combination desired and are arranged to trip the automatic feed. A very rigid stop is used to locate the turret in its central position, all movement of cross slide being from the center out.

The forming turret lathes are designed especially for rapid production. All bearings are accurately ground and hand scraped. The vertical forming attachment is provided with forming tool holder with all necessary adjustments, and a tool post is furnished for holding cutting off tools. A hand longitudinal adjustment is also provided. The operation of this attachment is very simple, a forming tool of the shape desired is placed in the tool holder and fed down past the work, turning it to the proper shape and diameter. The time required for finishing irregular shaped work by this method is but a fraction of the time required by other methods.

The head is cast solid with the bed and is provided with friction back gears, giving two speeds for each cone step, for turning and threading, or turning different diameters on the same piece without stopping the machine. All gears are entirely enclosed in guards.

The spindle is made of high carbon hammered crucible steel, bored from the solid, accurately ground and mounted in ring oiling babbitted bearings.

The turret is hexagonal in form and is provided with six tool holes with set screws for binding tool shanks; also bolt holes for securing tools to the faces. It is arranged so stock up to full diameter of hole can pass through turret, allowing short stiff tools to be used in turning long work. It is revolved automatically by the backward movement of the turret slide. The turret locking bolt is placed at front end of slide and works in ground taper bushings, let into the solid turret as near the periphery as practicable.

Automatic independent stops are provided for each turret face.

Taper gibs running the entire length of saddle provide means for taking up side wear. The saddle rests on an adjustable taper base by means of which the tool holes in turret may be adjusted in alignment with spindle.

High Speed Steel.

Wm. Jessop & Sons, New York.

This firm has brought out a new high speed steel under the appellation of "B 4 Any," which is specially adapted for

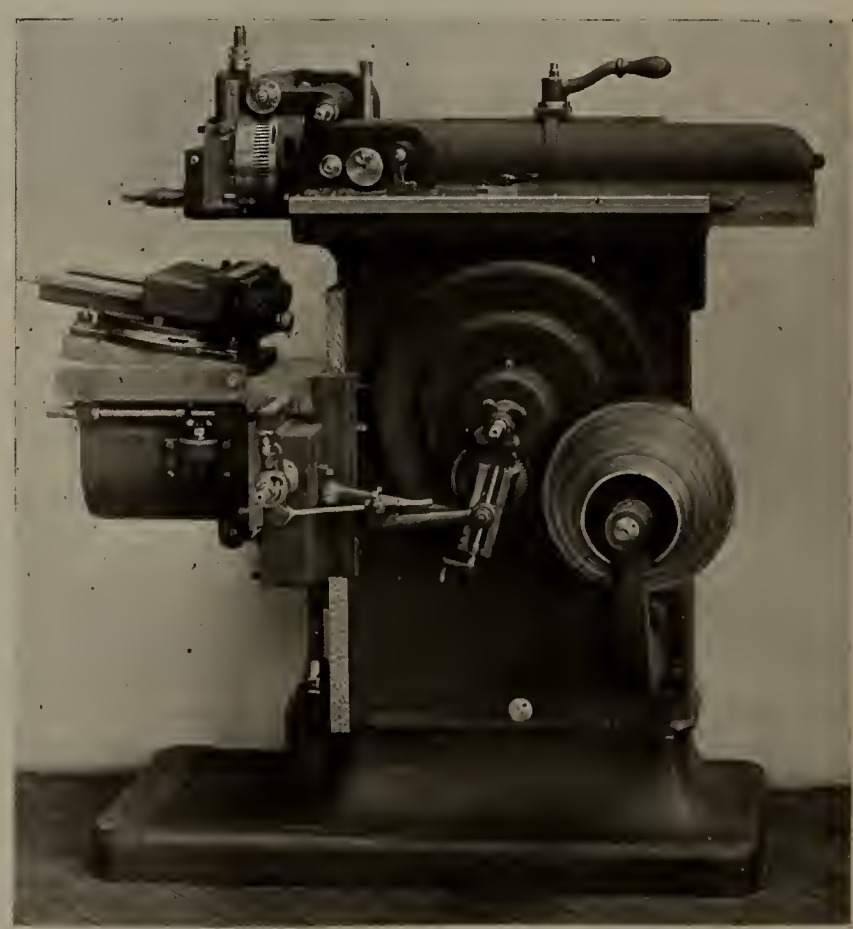

Stockbridge Shaper.

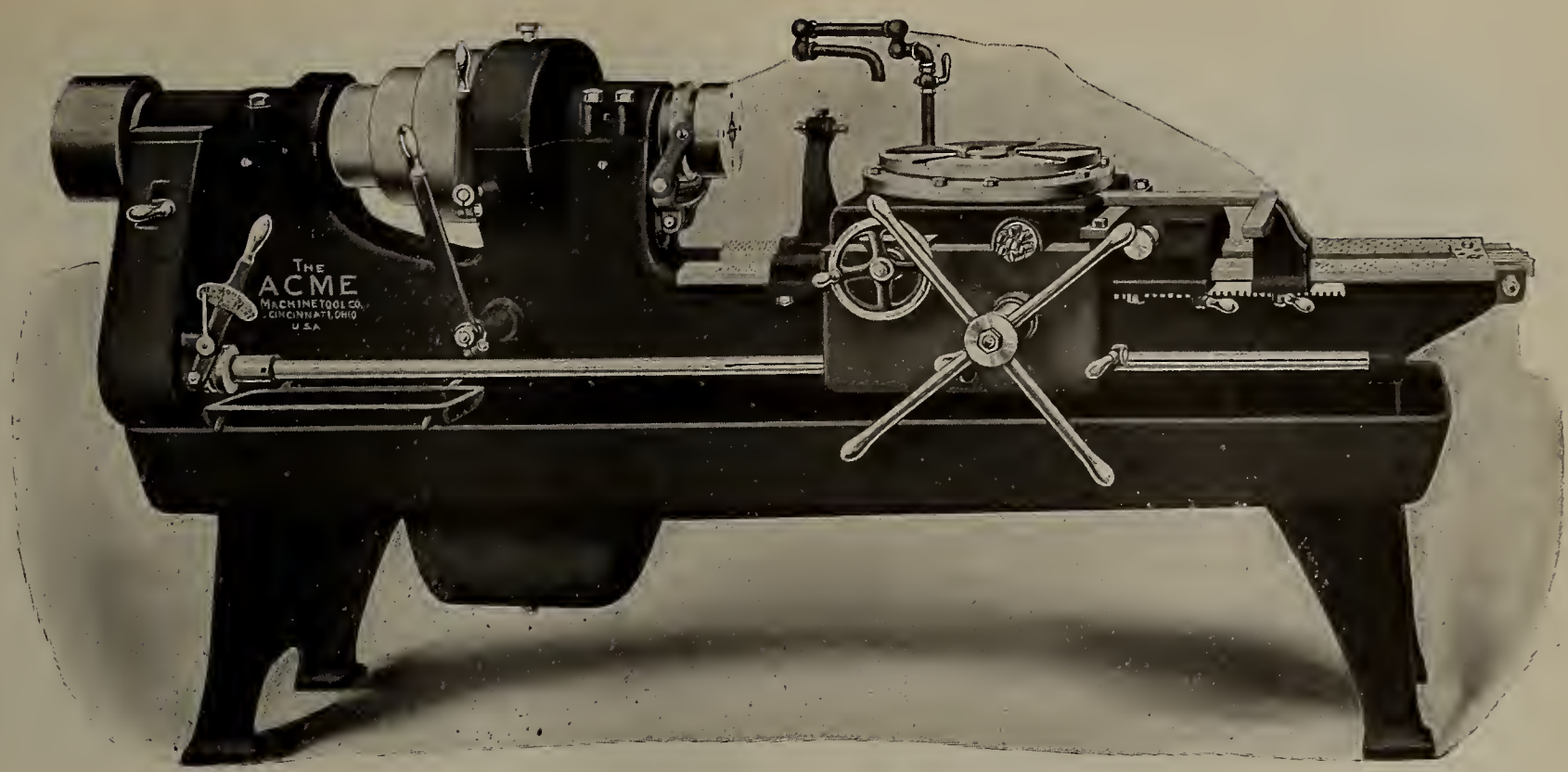

Acme Combination Turret Lathe.

use on cast iron. It is no longer novel to record the birth of a new high speed steel, but "B 4 Any" has so far done such good work that it promises to occupy a prominent and very important position in machine shops in the near future.

A test was made at Messrs. Watts, Campbell & Co., Newark, N. J., where a piece of 1-in. square "B 4 Any" was made into a tool. This tool was put on a large lathe and set to work on a flywheel, of hard, close grained cast iron, 28 feet in diameter and with a 48-inch face, with a speed of 70 feet per minute, ¼-inch feed and ⅞-inch cut, the tool turned and faced one wheel, hub, rim and end, without grinding, in which condition it was set to work on the second wheel; nor did it require grinding till the second wheel was nearly completed. It must be said that the showing was very extraordinary.

At the workshops of one of America's great railway systems, another test was conducted with a result which was at once a proof of the efficiency of the tool as well as spectacular.

A tool ⅞-inch square was used on a double armed lathe for turning cast iron cylinders for making iron packing rings for locomotive cylinders. The "B 4 Any" tool was put into the outside arm and a tool of another well-known brand of high speed steel into the inside arm of the lathe. Then the machine was started off at a speed of 115 feet per minute. The "B 4 Any" tool went 3 inches and burned down. The other burned down almost immediately after the start. At 104 feet speed per minute, "B 4 Any" tool turned the whole of the outside, while the other brand on the inner side went about 6 or 7 inches and then burned down. The "B 4 Any" after finishing the outside was placed on the inner post and finished the inside. It made a second cut before grinding. Further tests have proved the merit of the new steel and classed it above the ordinary.

Drills.

Barnes Drill Co., Rockford, Ill.

The all geared drill shown in the illustration eliminates all time wasting and troublesome, expensive cone belts. The speeds are geared, there being eight changes on the back geared machine. All changes of feeds and speeds are

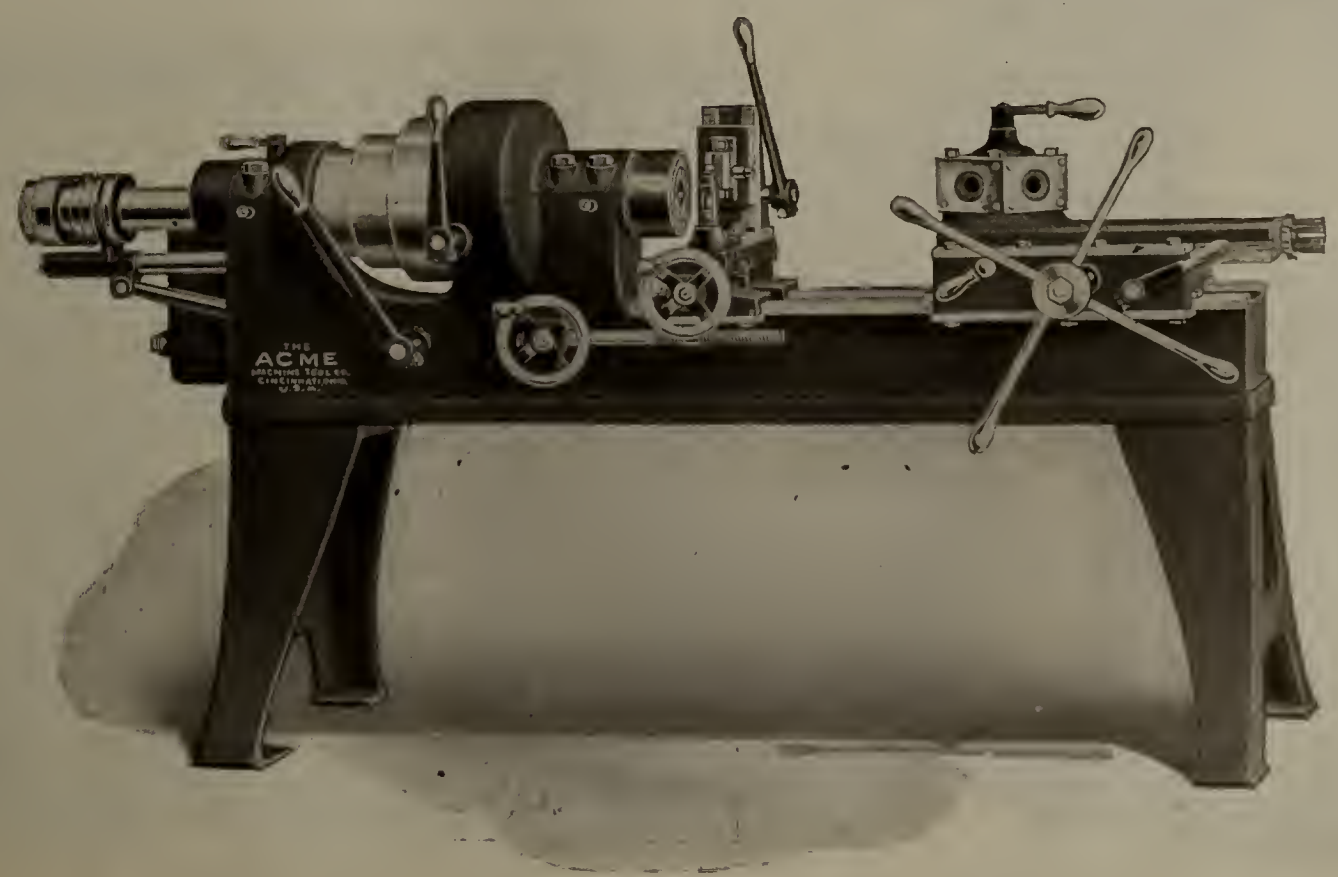

Cincinnati Forming Turret Lathe.

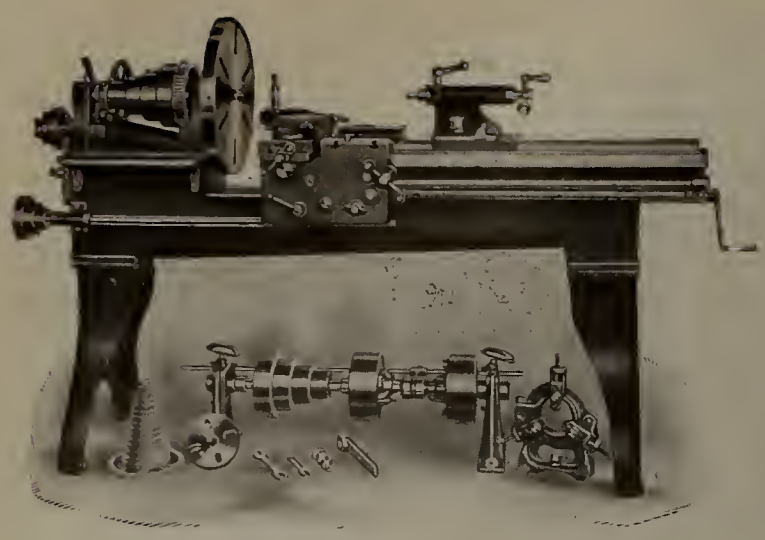

Barnes Extension Gap Lathe.

under instant control of the operator from the front of the machine so that no time is wasted by running around to shift cone belts or stopping to lace and replace same.

The star wheel hand lever is also an improvement upon the common ratchet lever for the reason that it is geared four to one through an internal gear and pinion and thus the handles need to be only 10 inches long in order to secure the power of the ordinary lever if it were 40 inches long. There is also no latch to bother with, and the operator simply spins the handles forward to bring the spindle down and backwards to return the spindle.

The back brace feature is something not found on the ordinary upright drills of the smaller sizes, yet this adds great strength and rigidity, particularly to our 20-inch machine.

The drift holes are placed below the sleeve so that the tool may be instantly drifted without turning the spindle around to match the hole in the sleeve in the old way.

To stop the spindle of the machine it is not necessary to shift the driving belt, but simply to throw the speed changing lever on to a neutral position, which can be done instantly. The back gears can be thrown in or out instantly without stopping the machine.

Some recent tests accomplished on these machines are as follows:

24-inch all geared drill without back gears.—1-inch high speed drill, speed 248 r. p. m., 3½ inches per minute, or to the limit of the twist drill.

2-inch high speed drill, speed 157 r. p. m., 1½ inches per minute in steel. Will drive a 2½-inch Echols patent interrupted thread pipe tap in steel boiler flanges 1½ inches thick.

You will see from the above tests that our all geared drills are as strong and powerful as the common drilling machines of four or five sizes larger. For instance, to do the work that could be done on our 24-inch all geared drill it would require a cone belt driven drill of 30-inch to 34-inch swing in order to get sufficient belt power.

A number of the railroad shops are already using the all geared drill, and the Barnes people contemplate adding some larger sizes.

At the present time this firm is bringing out a 26-inch all geared sliding head drill, which is going to be a valuable tool particularly for railroad repair shops, for it will have all the advantages of the all geared drill in addition to the sliding head, and it will be heavier, stronger, and more powerful.

The 13-22-inch extension bed gap lathe (see cut) is a little light for railroad repair work, but is a machine of unusual range and value for the automobile garage and general repair shops, as well as for street railway repair shops.

A 22-34-inch extension bed gap lathe has just been brought out which is a very strong, powerful tool, weighing in the neighborhood of 5,000 pounds. It is a splendid machine for railway repair shops. It is designed for handling heavy work and will be of the same excellence of the smaller machine.

The extension bed gap lathe has many advantages over the common type of block gap lathe, for the width of the gap can be varied to suit any particular job, not only for getting in work of large diameter through the gap, but for taking in long work between centers.

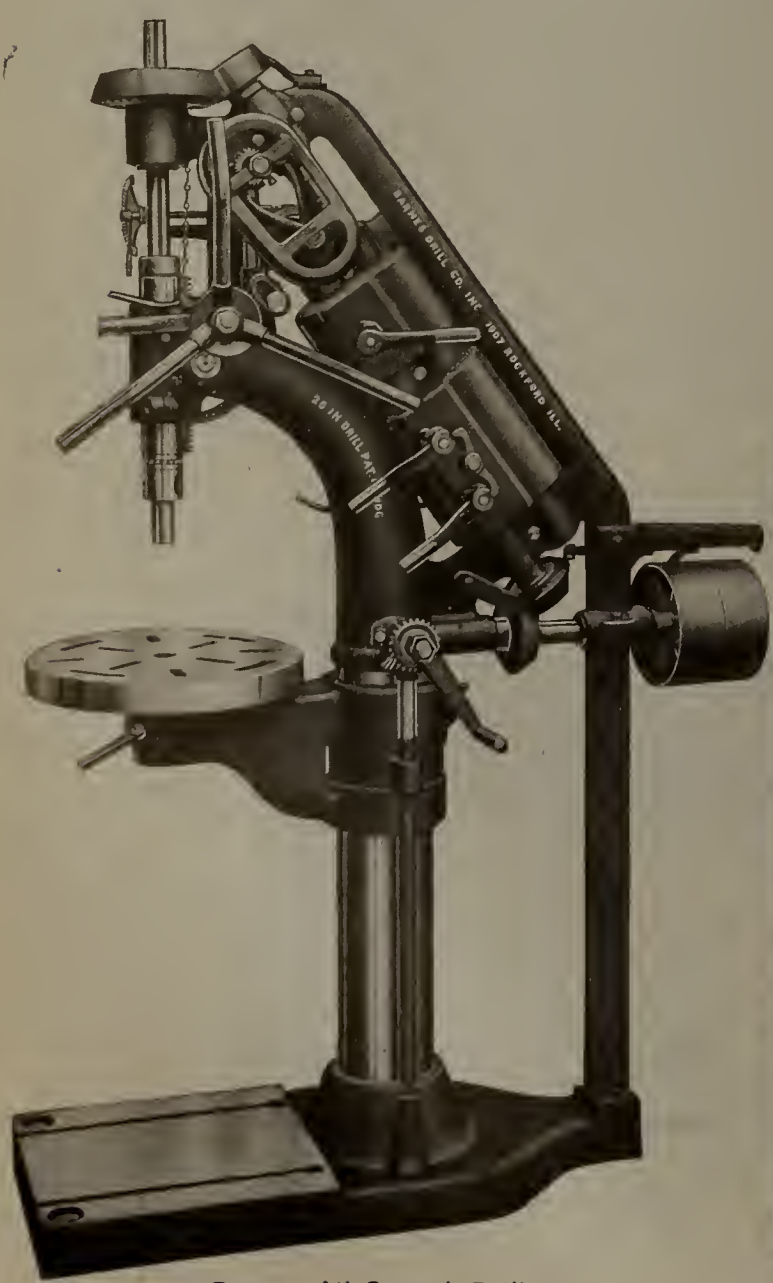

Barnes All-Geared Drill.

Interior of Sheet Metal Shop, Webster Mfg. Co.

Interior of Malleable Chain Foundry, Webster Mfg. Co.

The two beds of our gap lathe are planed together by a dovetail construction so that when the top bed is drawn back the machine remains in perfect alignment at any point.

The Barnes Drill Co. also makes an all geared tapping machine which has all the advantages of the all geared drill in addition to having the clutch gears on the driving end of the machine and not on the spindle. This eliminates the excessive wear and tear of the clutches on the spindle of the so-called "geared tapping attachments." The clutch gears are placed where they have the least to do, being geared down about thirteen to one in front of the clutches.

Founders.

Webster Mfg. Co., Chicago.

The line of goods manufactured by this firm includes malleable buckets, detachable chain, elevator legs, spouting and sheet metal goods. This is in addition to general foundry and machine shop work. The Webster Mfg. Co. has recently moved its entire plant to Tiffin, Ohio, two interior views of which are shown in the illustrations. Among the larger buildings are a sheet metal shop, a malleable iron foundry, engine room, shipping room, machine shop, gray iron foundry, office building and pattern vault. All the buildings are of steel frame with brick walls, saw-tooth roofs with a north light.

All shop buildings are equipped with traveling cranes with capacities ranging from 5 to 30 tons. The buildings are arranged so that the products pass through in logical order, the shipping and storage room being at the center of the plant. The machinery is all electrically driven, the total horse-power for operating the plant being 700. The machine shop is well equipped with lathes and boring mills and can take in sheaves or pulleys up to 18 or 20 feet in diameter.

The gray iron foundry is of the most modern type and has two cupolas, one of 30 tons' capacity and one smaller. The malleable iron foundry has a capacity of 20 tons per day and is equipped with automatic machines for assembling the chain. In all the shops, air and air cranes are used extensively. The plant is lighted by the Cooper Hewitt system and is heated by the blower system. Care has been taken to provide for the employees by the installation of lockers, wash rooms, shower baths and a hospital room. The latter feature is especially commendable.

Union Elbows.

Jefferson Union Co., Lexington, Mass.

Unions and elbows combined are made, both all-female and male-and-female, and the advantages of using them whenever a union is needed near an elbow will be evident at a glance.

The all-female elbow takes the place of two pipe-joints that are somewhat troublesome to make, and three ordinary fittings—first a straight union; second, a nipple; and third, an ordinary elbow. Results are better when there are fewer joints—there are just so many less chances for leakage.

The male-and-female elbow saves three pipe-joints, and takes the place, first, of a straight union; second, of two nipples; and third, of an elbow. The joints avoided by this combination are even more difficult to make than those for which the all-female elbow is a substitute.

Absolutely precise aligning of the elbow and pipe on the two sides of the elbow, no matter which style of union is used, is not required, because of the construction of the Jefferson. This has the Jefferson ground spherical brass-to-iron joint, which cannot corrode, and which makes an unfailingly tight joint, without the use of a gasket. In addition, there is a large amount of play between the nut of the union and the swivel end, making the union very easy to apply even when the alignment is not exact. The construction of the nut, and its adjustmet to the swivel and the brass seat ring, are the special features peculiar to Jefferson unions. The brass ring is turned from seamless brass tubing, and therefore always free from blow holes and imperfections, being much superior in this respect to seat rings of cast metal. In the second place, the Jefferson ring sets in a recess away from the runway of the pipe, with an iron wall on each side, and is thus secured against any possible loosening on account of the difference in the expansion and contraction of the iron and brass. The unions are shown in the illustrations.

Tool Sockets.

Corona Manufacturing & Supply Co., Boston, Mass.

The accompanying photograph presents a new style of drill, reamer and milling tool socket, which is known as the "Corona" socket. It is designed to drive all standard twist drills or drills made up of the different forms of twisted shapes.

Economy in performing work demands close attention and in many instances is the direct cause of developing features, that not only brings about the results required in the direction of economy, but proves to be beneficial financially to those obtaining such results.

When the twist drill was first put upon the market it would seem that some inventive genius would have followed

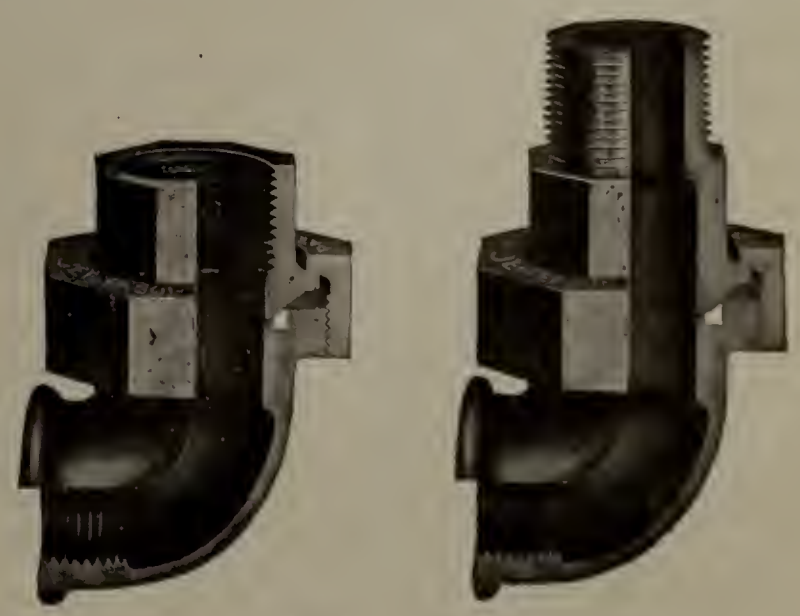

Jefferson Union Elbows.

Corona Tool Holders.

this up with a chuck or socket to drive drills and other tools from the twist, but such was not the fact.

In using the "Corona" socket with the standard twist drill, the flute of drill is carried through to the root of shank, but not below the diameter of shank at this point. When being used with drills made up from twisted shapes, the shank is turned up without any change in original shape and the socket engages and drives from flute.

Milling tools and reamers are made with taper shank with an engagement to conform with the projecting drive or engagement on socket. It is also designed to equip drill presses, milling machines, etc., with the same engagement upon the spindle, thus doing away with the use of the tang drive upon sockets as well as drills and other tools.

The advantages to be gained by the use of these sockets over others can be summed up as follows: There is no possibility for broken tangs, worn sockets on account of drill turning in socket, avoids the expense of refitting drills with broken tangs, and on account of the positive and direct drive prevents the breaking of the various tools used. It does not interfere with the standard tool equipment of any shop or tool room, is much more economical than other types, as the range of work this nest of sockets will cover is much wider and reduces the number of sockets required by a large per cent. On the larger sizes of drills especially it is of direct advantage, as with engagement from three to five inches less steel is required.

Many drills in all shops have broken tangs and they must be refitted or a special form of socket must be used, adding to the expense. Drills in this condition can be machined to fit this socket by cutting flute through to root of shank, using up the entire drill without special form of socket, and if fitted to the "Corona" socket when new, will have the benefit of the tang as well as drive from the flute.

Reliance Swing Saw.

Reno-Kaetker Electric Co., Cincinnati, Ohio.

This concern makes a very neat application of an electric motor to a cross cut swing saw. No other tool requires a motor drive as often as a swing saw, as it is generally put in an out of the way place and usually requires several countershafts to reach it by belting. Besides saving from one to two horsepower in extra countershafts and belting, it means an additional saving in power because when the saw is not running, the motor is not consuming any current.

The motor is mounted directly in the base of the saw frame which consists of only two pieces, a cast-iron base and a hollow cast-iron swinging arm. This makes a very simple arrangement and at the same time one which is extremely rigid, so that the saw blade is forced to follow its cut.

To locate this swing saw in the shop it is only necessary to bolt it up either to the ceiling or a side wall, or it can be mounted on standards or posts attached to a bench and needs only a couple of wires run to the motor.

For railway car shops or repair shops which are equipped with electric power, it is especially handy as it can be placed in an otherwise inaccessible corner of the shop it requires very little floor space and is built for heavy service.

The saw is manufactured by the Reno-Kaetker Electric Co., of Cincinnati, O.

High Speed Forging Press.

The United Engineering & Foundry Co., Pittsburgh, Pa.

This description is made brief in the hope that it will be read by all interested in good forgings and is written with the idea of correcting a mistaken notion held by the majority of people who are makers or users of forgings. This misunderstanding being that the forging press here illustrated is more suitable for die forging than for such forgings as are now made under a steam hammer with flat dies and simple tools, such as fullers, flatters, sets and cutters. The press will make anything a steam hammer will make with the same equipment of small tools. The hammer crew can operate a press quite readily and will find they can produce forgings with less effort owing to the absence of shock and jar and also that the press cannot be damaged by careless handling.

The press is very rapid and at the same time the working squeeze is relatively slow as only sufficient stroke to make the reduction and clear the work is used, this never exceeds from 2 to 6 inches. The press is arranged with from an

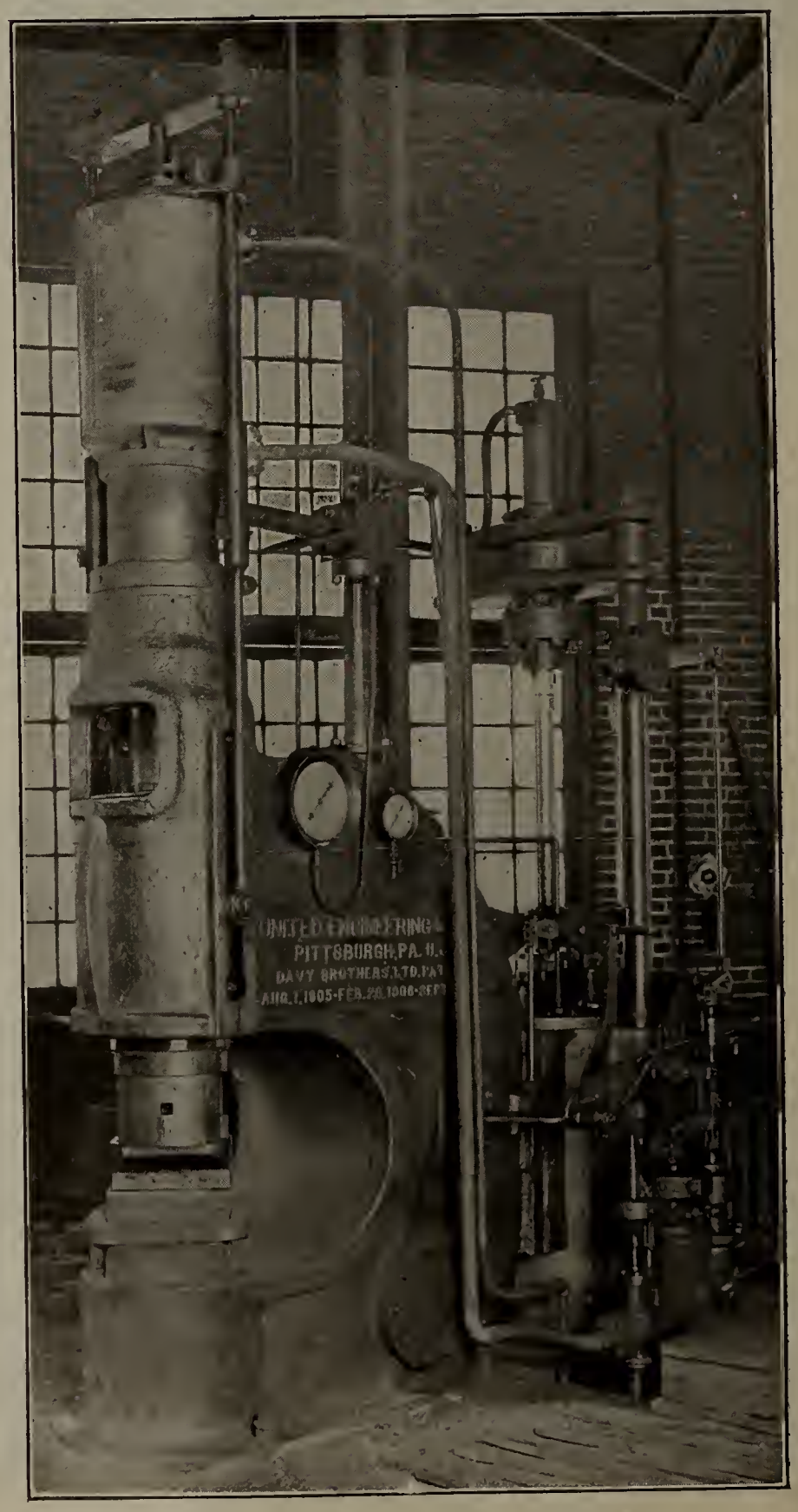

United Engineering & Foundry Forging Press.

18 inch to a 48 inch stroke and in the case of the former this is divided into light or adjusting stroke of 18 inches and a heavy or power stroke 3 inches,—the larger ones in the same proportion.

The light stroke, by means of a forward motion of the single lever, brings the top die down in contact, or nearly in contact with the forging and with a further forward movement of this same lever the actual forging is accomplished by admitting steam to the intensifier cylinder, this intensifier stroke, however, follows exactly the operator's hand, both as to distance and speed of travel. This makes it possible to use a very short forging stroke when actually forging and the long stroke only when an extra amount of room is required, making it possible to use only part of the intensifier stroke, and as the return is accomplished by gravity, and steam used on one side of the piston only, the economy in steam is considerable.

In roughing down a forging the press will do a great deal more work than a hammer, for the reason that it can reduce a billet several inches at a squeeze which is possible for the reason that the press acts on the metal only about one-twelfth as fast as a hammer. For example,—a hammer with a thirty-six-inch stroke at 100 strokes travels at the rate of 600 feet per minute and a press with a 3-inch stroke at 100 strokes travels at the rate of 600 inches per minute.

This low squeeze while repeated as often as a hammer blow gives the metal time enough to flow to the center resulting in sound forgings and when it is understood that the forging is reduced from 1 inch to 2½ inches per stroke in place of from ¼ inch to ½ inch, the time saving will be obvious.

The press is under such good control that it can be used for punching, cold cutting or shearing. It is self-contained, there being no other hydraulic equipment necessary. It can be set up near an office, foundry, laboratory or fine machine tools without affecting their operation. The foundation need be only sufficient to support the dead weight, and the repairs are practically nothing.

One of these presses may be seen in full operation at the convention, and the United Engineering & Foundry Co. will be glad to meet all interested parties at Space 28, main building.

Tool Holders.

The Ready Tool Co., Bridgeport, Conn.

Since the introduction of high speed steel, machine tool builders of all kinds have been making a constant effort to get out better and heavier machines that would keep pace with the efficiency of high speed steel and get the highest results.

The Ready Tool Company's new round nose roughing tool, shown by the illustration, has been especially designed to meet the demand for heavy duty service at high speed and fast feeds.

In designing this tool the company had in mind also the increased output which can be gained if the Fred W. Taylor standards of cutting contour and known cutting angles be applied to a tool holder, thereby getting the results of a properly designed and formed forged tool with the economical advantages of a tool holder and without the expensive

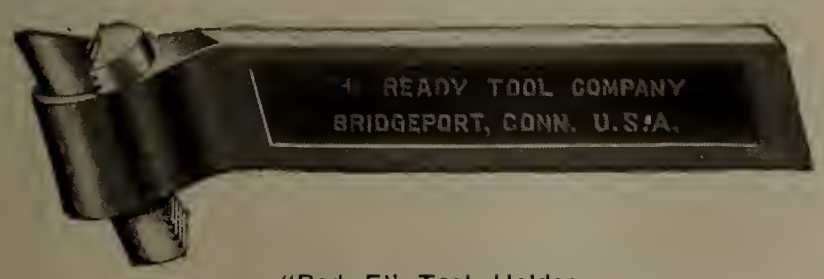

"Red E" Tool Holder.

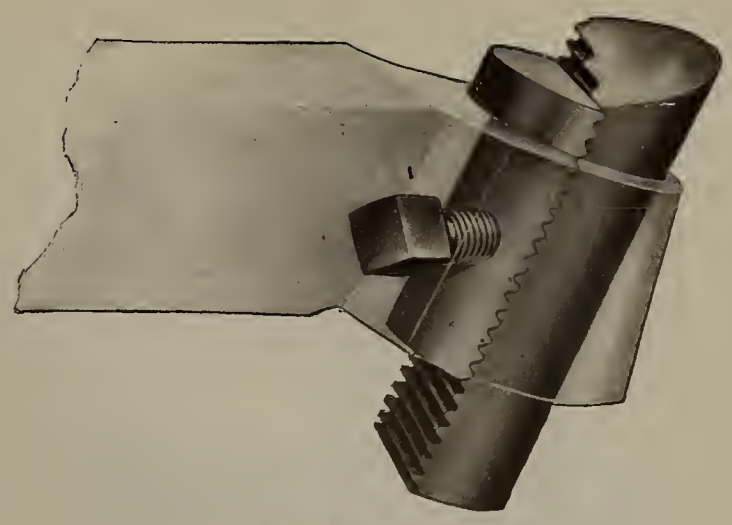

"Red E" Tool Holder.

process of high priced blacksmith treatment. At the same time furnishing a tool holder containing a piece of high speed steel of sufficient area to dissipate heat and treated with the most modern and approved method of treating high speed steel.

One remarkable feature of this tool is the fact that they have maintained what is standard in all their tools, one grind only, and at the same time maintaining the correct cutting contour and angles; side and front clearances being automatically maintained.

In the design of this tool and the adaptation of the Taylor standards, they have had the assistance of one of the associates of Mr. Taylor who has worked with him for a great many years, the man who is known of them all as the best mathematician and most expert in the laying out of the necessary lines and angles. This tool has been so designed by him that the resultant pressure of the work is carried downward through the cutter and dog to the base of the tool, making a very rigid tool that will not chatter or upset.

Cutting Lubricants.

Kansas City Chemical Co., Kansas City.

A new cutting lubricant to take the place of lard oil has recently been placed upon the market by the Kansas City Chemical Co., of Kansas City, Mo. It is called a "Lardoilene Cutting Compound."

As is indicated by the name, this material is a blending of the best winter strained lard oil with other oils, the result being a compound which, when mixed with water in the required proportion is said to surpass in lubricating qualities the best lard oil, and has the additional advantage of being much cheaper and cleaner.

It can be used in all of the operations where lard oil was formerly exclusively used, and will not clog the pipes or gum the machines. It keeps the tools cooler than lard oil, and will lengthen the life of tools and dies. This material has been adopted by some of the largest shops in the country, and is giving universal satisfaction.

The manufacturers will be glad to send their new booklet descriptive of Lardoilene, to any one interested in a material of this character.

Portable Electric Drills.

The United States Electrical Tool Co., Cincinnati.

The illustration is that of a portable electric driven radial drill. This drill gets its driving power from an ordinary incandescent lamp socket. The motor is made to operate on a 110 or 220 volt direct current, or 110 or 220 volt, 60 cycles, 1-2-3 phase, alternating current. This radial drill has many different movements. It will drill at any angle and has a rack and pinion on the horizontal arm, which is shown, for moving the drill in and out. It will drill a radius of 24" and

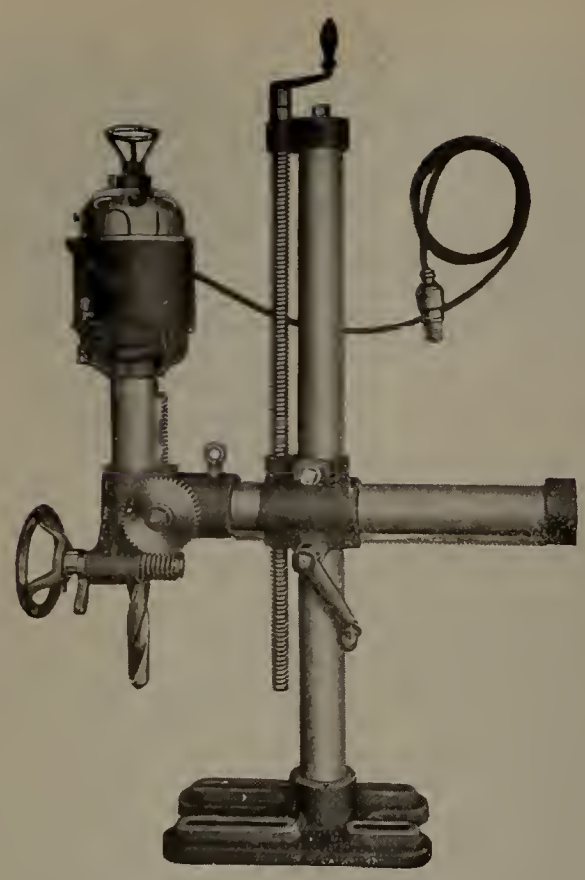

Drill Manufactured by U. S. Electrical Tool Co.

has a feed of 5". It can be furnished with an extra long feed up to 12", if so desired.

The drill is made in two sizes, one of which is designed to drill up to ⅞", with a weight 145 pounds, another size drills up to 1¼" in metal and weighs 165 pounds. It is very easy matter for two men to carry this tool about the shop for operation. This drill is now being used in several of the large railway shops.

Protective Paint.

The Fibrous Paint Co., Philadelphia.

During the past ten years many chemists, manufacturers of paint, builders of structural iron and steel work and railway engineers, have been experimenting in the hope of discovering a perfect protective coating for exposed structures. However, they have not succeeded as yet in producing what may be termed a perfect protective paint for iron and steel.

Good pigments are common, but most binders heretofore known have been too perishable to contribute to the durability of paints, for the reason, perhaps, that more attention has been given the former. The binder, however, should be of equal importance, because its purpose is to cement together the minute particles of the pigmentary constituents, thus resisting the ever-active corrosive agencies of oxygen, solar heat, acids and water, which in time destroy the linseed oil. With the disintegration of the film the rust-producing elements penetrate to a corroding contact with the underlying metallic surface, and therefore to provide a protective coating for iron and steel that will defy the action of corrosive elements for the longest time has been the aim and effort of many experimenters.

The Fibrous Paint Company, of Philadelphia, has produced a protective coating that keeps these disintegrating forces successfully at bay. This company and its predecessors have been successful, their experiments covering a period of more than twelve years, and the results obtained justify the attention of every railroad man, as well as every manufacturer of structural iron and steel work.

Bolt Threading Machines.

The Landis Machine Co., Waynesboro, Pa.

The Landis Machine Co. of Waynesboro, Pa., is one of the earliest exhibitors at the Railway Master Mechanics' and Master Car Builders' convention at Atlantic City. The company has exhibited their bolt threading machines each year since 1905, at which time there were only four machine tool builders attending the convention. Since that time each year has added more and more along this line.

The company has been demonstrating its bolt threading machine and for a number of years has been showing it in operation at the convention. The machine has met with marvelous success among the railroad shops, bolt manufacturers, and the largest industries of all kinds both in this and foreign countries. The machine illustrated is the 1½" double head motor driven type with a variable speed motor. This is the machine which will be on exhibition this year at the convention with other tools.

The bolt threading machines are built in single, double and triple head in all standard sizes from ½ to 2½". The company also manufactures a line of die heads for pipe threading machines, and smaller sizes of pipe threading machines.

In all tools the celebrated Landis die which has many distinct features of its own is used. The features of advantage in the die as compared to others is the life of the die which is said to be from ten to twenty times that of the hobbed die, the fact that it never requires to be annealed, hobbed or retempered, will admit of much higher cutting speeds on account of the correct cutting principal, and produces results which can not be gotten from the hobbed die machines.

The Landis Machine Co. is represented at the convention this year by Mr. Ira D. Grove, Mr. J. W. Willis, Mr. H. L. Fisher and Mr. S. F Newman

Miscellaneous Railway Specialties.

The Industrial Supply & Equipment Co., Philadelphia.

The Industrial Supply & Equipment Comany, 407 Sansom Street, Philadelphia, is an exhibitor at the convention this year. The company has been forging ahead and adding some very desirable lines in its railway specialty business.

It has recently acquired the patents of Sinclair J. Johnson and is now prepared to manufacture and deliver the Johnson Hopper Door. Model of type "Z" can be seen at the exhibit. This door seems to be one of the simplest hopper doors on the market and in the hands of this company will no doubt have a large sale.

The president is Edmund Waterman Dwight and the secretary, Wm. T. Dunning. These gentlemen have the same offices with the Chester Steel Castings Co., the first company to make steel castings in the United States. The Industrial company's close affiliation with the Chester Steel Castings Co. no doubt places them in position to have some railroad specialties manufactured to advantage.

The Industrial Company also sells the "D.& L." throttle rod stuffing box, which can be seen at the exhibit. It has also taken over the patents and rights to manufacture the "B. & H." rail anchor, which can also be seen at the exhibition.

Riveters.

The John F. Allen Co., New York.

The illustration shows a riveter of unique design and construction recently furnished by the John F. Allen Company, 370 Gerard Ave., New York City, for sheet metal work. It is one of the smallest riveting machines built by them, having 7½ inch reach, variable gap and 5½ inch cylinder.

While embodying all those features which have contributed so largely to the success of Allen riveters as a type, it possesses, as well, many original features of especial value for the work intended.

It is designed for sheet metal work where the rivets used run from 1/16 to ¼ inch diameter and are driven cold. The stake "S" is easily removable in order to permit of other stakes, suitable to the work in hand, being used. This materially increases the range of the work that can be handled

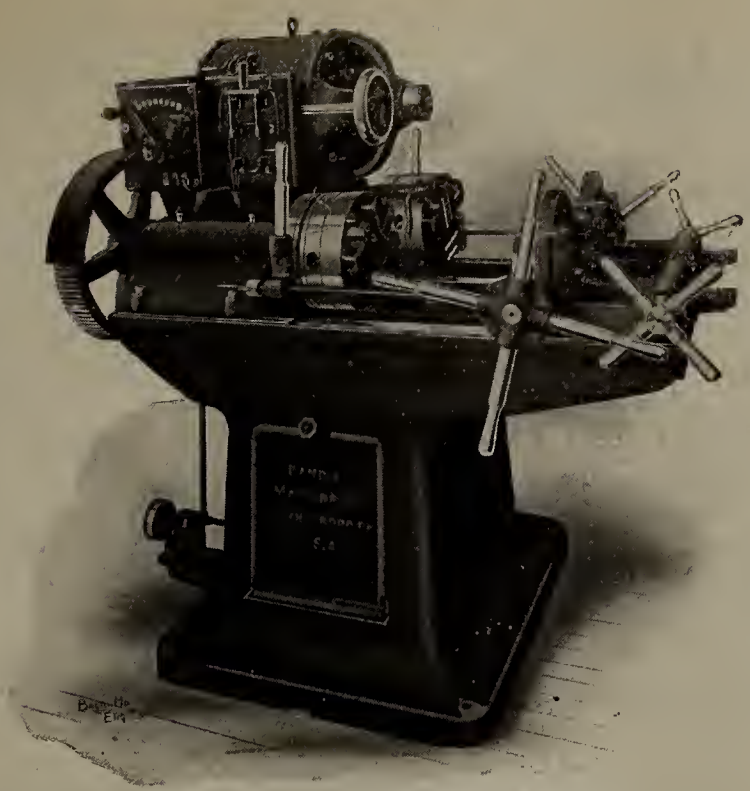

Landis Double Head Bolt Spreader.

and will be found a great convenience as stakes can be made of any shape or size at comparatively small cost to suit the most unusual and difficult jobs.

The machine can be operated by foot pedal, as shown in the illustration, or by a hand lever, as may be desired. The work to be riveted is placed with the head of the rivet resting upon the holding-on die "D" so as to bring the end of the rivet in line with the upper die "D-1", which usually stands about ½ inch above the top of the rivet.

By pressing the foot on the treadle, air of from 60 to 100 pound pressure is admitted to cylinder "C." This causes the piston to move forward and the side links "L" and middle links "M" to assume a position parallel to the axis of ram "R." The ram carrying the upper adjusting die "D-1" is thereby forced down upon the end of the rivet, forming a head with one stroke.

By relieving the foot pressure on the treadle, the slide valve in valve chest "V" reverses the motion of the piston and this returns ram "R" to its original position ready for the next rivet.

The number of rivets that this riveter can drive within a given time is entirely dependent upon the operator, as the time consumed by the machine in driving the rivet is practically negligible. The amount of air consumed per rivet does not exceed 1/5 of a cubic foot.

The machine is noiseless in its operation and can be placed in any convenient location, in the shop without in any way interfering with other equipment. If preferred, it can be operated by steam.

Milling Machines.

The Cincinnati Milling Machine Co., Cincinnati, O.

For more than a quarter of a century the Cincinnati Milling Machine Co., has devoted all its time and energies to the design and manufacture of milling machines. For more than ten years past it has given especial attention to the development of the process of milling as a method of machining, and this development has necessitated the radical changes in milling machine design that have taken place during the same period.

The business has grown to such proportions that the large plant on Spring Grove Ave. has for some years past been too small, and for more than a year the company has been operating in addition to this plant, the first section of a new plant at Oakley, comprising about 100,000 sq. ft. of floor space. To this latter, it is adding an additional building which will make a total floor space of more than 200,000 sq. ft., and will enable us before the end of the present year, to consolidate all of its plants, offices, etc., in the new building.

The company makes column and knee type millers in all commercial styles and sizes—plain, universal and vertical—single pulley drive type and cone drive type. Representative of the latter is the No. 3 Universal, shown herewith, which is a popular tool room machine for the larger shops. It is double back geared, has the manufacturers' standard range, and is equipped with an extremely accurate dividing head of 12" swing. This head, in addition to being accurate, is made in extremely large proportions, which will insure durability and the maintenance of its accuracy, even under heavy service.

It is the policy of this company to bring out improved designs, as rapidly as the new models can be thoroughly developed and tried out. A step in this direction was the re-designing of a line of cone driven machines. The present machine, it will be noted, has the feed box inserted in the column, and drive direct from the face gear. The entire feed mechanism is contained in this box and is assembled by a group of men who do nothing else. All the gears that have to do with feed changing, are steel and hardened. The construction is entirely dust proof. The three levers shown make all the sixteen changes. They are high above the floor, within convenient reach. The index plate tells immediately which lever to move and where to move it. It is the only direct reading index used on any make of milling machine.

Representative of the single pulley type of miller is the vertical shown in the illustration herewith. The entire mechanism of this machine is the same as that of the horizontal machines of the single pulley drive type, with the exception of the vertical spindle feature. This entire line of machines has been designed with a view to producing the

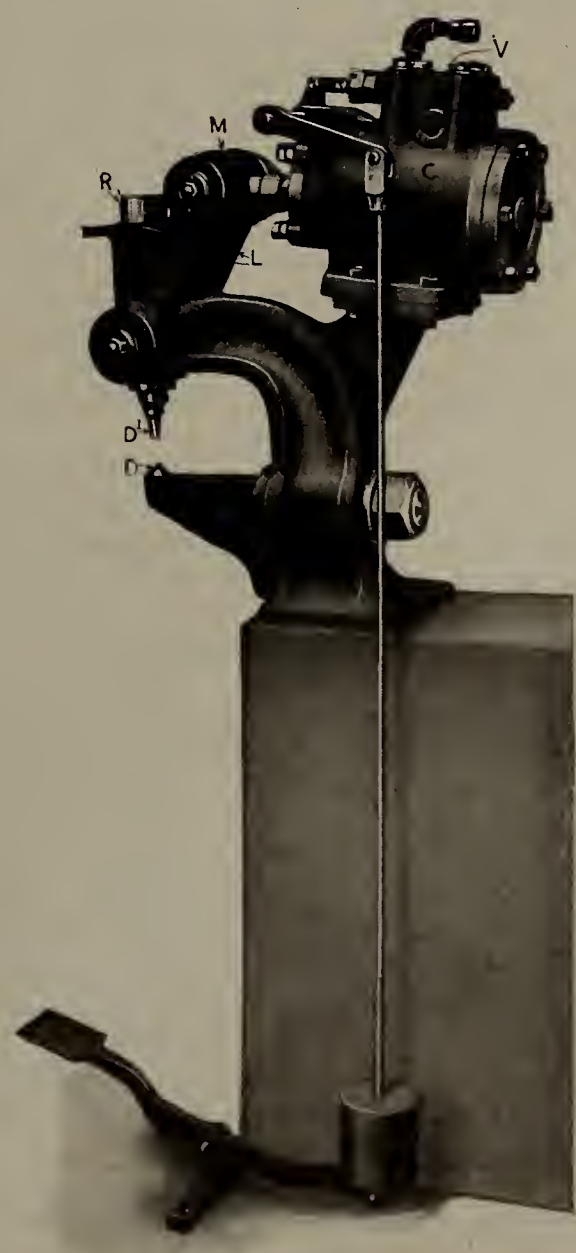

Allen Riveter for Sheet Metal.

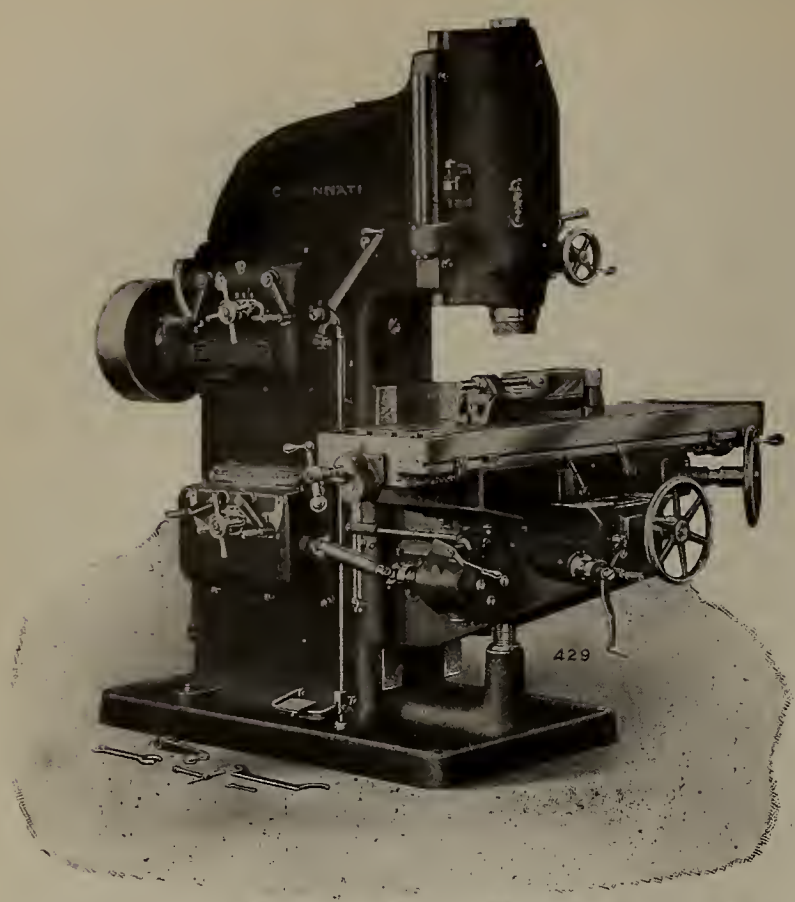

Cincinnati Vertical Miller with Single Pulley Drive.

greatest possible rigidity in the important members, and the design is a direct result of a careful analysis of the duty to which each member is subjected. This has resulted in a machine of extremely high efficiency and of the greatest rigidity practical within the compass of each size of machine.

In the design of its machines the company has given careful consideration to the fact that the machine and the operator form a production unit. The efficiency of this unit depends largely upon the handiness of the machine. The time required for taking a cut is, on most jobs, only a small portion of the total time. The saving in time must therefore chiefly be made by reducing the number of moves of the operator. This has been accomplished by simplifying the operation of the machine. All speed and feed change levers, as well as the adjusting levers, are on the operator's side within easy reach, which fact, together with the direct reading index, treadle for speed changing, convenient feed change arrangement, and the location of levers, makes the machine, one of the handiest and therefore most efficient millers to be had.

The company has for some years past, been operating its own foundry, which has enabled it to put into machines a grade of iron castings of the highest attainable quality. The other materials are the best that can be procured for the purpose.

Mica for Railway Equipment.

The Storrs Mica Company, Owego, N. Y.

This company will exhibit a new form of mica lantern globe, which will be furnished railways at a figure which will show a decided economy as compared with the glass; also samples of headlight chimneys for oil and acetylene headlights and mica chimneys for caboose and station lamps.

The company commenced the manufacture of mica chimneys for gas lights in 1895 and it was not until 1900 that a mica chimney especially adapted for use on locomotive headlights was perfected and introduced among the railways.

The first year the company was represented at the mechanical conventions was at Saratoga in 1903, and it has been in attendance at these conventions every year since and exhibited at most of them.

Iron and Steel.

The Zug Iron & Steel Co., Pittsburgh.

The Zug Iron & Steel Co. is one of the oldest iron manufacturing concerns in the country, and one of the few confining themselves exclusively to production of high grade iron for special requirement purposes. The company makes no steel bars of any description, nor what is commonly known as "Common" or "Merchant Bar" iron, but devotes its experience to perfecting formulas of irons that provide railways, locomotive builders and machine shops with material adapted to particular purposes, which can be relied upon for uniformity in quality and finish. It claims special value for its irons for stay bolts, engine bolts and radial stay purposes, and for its superior forging qualities for parts in locomotive and car construction, such as connecting rod centers and straps; eccentric links, engine frames, draft pockets, equalizers, coupler sections, special chains, etc.

As railways are seemingly at an epochal point in their history, and best equivalent for outlay will be carefully considered by their various departments, the Zug Iron & Steel Co. is in position, from its many years of experience, to give them just what they need, at reasonable cost.

The company invites examination of its exhibit at Atlantic City.

Nut and Bolt Fasteners.

The American Nut & Bolt Fastener Co., Pittsburgh, Pa.

This company manufactures the well known "Bartley self-locking nut and bolt fastener." The illustration shows the device as used in rail joint work.

With the use of this fastener the nut has a full bottom bearing against the fastener and also the bearing is the same

on the splice bar. There is no wear either on the nut or on the splice bar, as there is when nut locks of the spring nature are used. This fastener can be removed with the wrench just the same as the spring fastener.

Joints will be on exhibit at the booth of the American Nut & Bolt Fastener Co., at Atlantic City.

Nut and Bolt Locks.

The Interlocking Nut & Bolt Co., Pittsburgh, Pa.

This company manufactures all classes of bolts used in car equipment as well as in track. These bolts, of course, are all equipped with the patented Clark nut lock.

The company will exhibit at the conventions in booth 638.

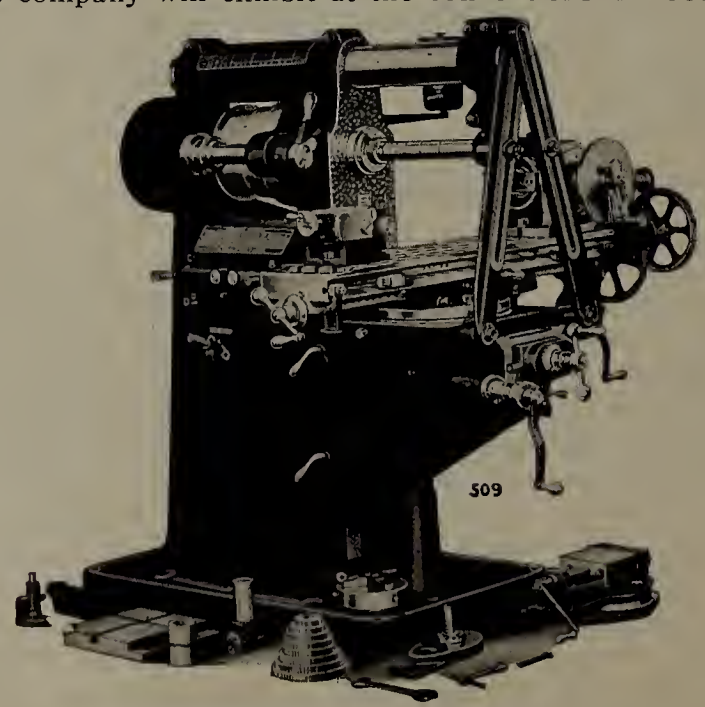

Cincinnati No. 3 Cone Driven Miller.

Industrial Notes

The ball of the Air Brake Association's convention in Chicago May 25, was one of unusual attractiveness and pleasing features. The souvenirs for the ladies and the excellence of arrangements are to be credited to Mr. George N. Sweringen, of the Chicago Railway Equipment Co., and chairman of the Ball Committee.

Until the conventions close, the office of J. D. Conway, secretary of the Railway Supply Manufacturers' Association, is located on Young's Million Dollar Pier, Atlantic City, N. J. All mail intended for Mr. Conway should be addressed to him in that way. Circular No. 2, issued recently by Mr. Conway, gives information about the general arrangements, membership dues and badges, hotel accommodations and transportation, and other facts about decorating booths and installing exhibits necessary for those who will attend the conventions. Copies of this circular may be had by writing Mr. Conway.

The Traveling Engineers' Supply Men's Association has reserved the entire second floor of the Sherman Hotel, Chicago, for exhibits during the eighteenth annual convention of the Traveling Engineers' Association to be held in that hotel August 29 to September 1, inclusive. Approximately 8,000 sq. ft. of floor space will be available for exhibits, and numerous applications for space have already been received. Power for live exhibits will be furnished by the hotel at a nominal charge. The Traveling Engineers' Association has a total membership of 750, and it is planned to make the coming convention the best in the history of the organization.

The members of the enrollment committee of the Railway Supply Manufacturers' Association, for the Master Car Builders' and Master Mechanics' conventions, at Atlantic City, in June, are as follows: Oscar F. Ostby, chairman, Commercial Acetylene Co., 80 Broadway, New York; Frank S. Barks, Commonwealth Steel Co., Pierce building, St. Louis, Mo.; B. Palmer Claiborne, Dressel Railway Lamp Works, American National Bank building, Richmond, Va.; J. W. Dalman, American Steel Foundries, Commercial National Bank building, Chicago, Ill.; C. W. Gearhart, H. W. Johns-Manville Co., 100 William street, New York; W. S. Hammond, Jr., Consolidated Car Heating Co., Fisher building, Chicago, Ill.; Arthur E. Hooven, Railway & Engineering Review, 30 Church street, New York; E. W. Irwin, Oxy-Acetylene Appliance Co., 149 Broadway, New York; H. F. Jefferson, United & Globe Rubber Mfg. Companies, Farmers' Bank building, Pittsburg, Pa.; J. G. Mowry, Patton Paint Co., 50 Church street, New York; C. S. Parker, Parker Car Heating Co., Ltd., Detroit, Mich.; M. S. Simpson, Pressed Steel Car Co., Farmers' Bank building, Pittsburg, Pa.; C. L. Woodruff, Lowe Brothers Co., 28 S. Peoria street, Chicago, Ill.; C. B. Yardley, Jr., Jenkins Brothers, 80 White street, New York. This year the enrollment booth will open at noon on the day before the convention, Tuesday, June 13, so as to facilitate the handling of the registration on the opening morning.

The Homestead Valve Co. has appointed E. Mortin & Co. as its agent for Louisville, Ky., and vicinity. A stock of Homestead valves will be maintained for the supply of the trade in that city.

The United States Circuit Court of Appeals for the Second Circuit, in the suit of the Simplex Railway Appliance Co. against the Pressed Steel Car Co., handed down an opinion on May 9th affirming the decision of the Circuit Court which sustained the Bauer patent covering the "Simplex" bolster and holding that the "Reliance" bolster made by the Pressed Steel Car Company was an infringement.

F. J. Cowdrey, Railway Supplies, Chicago.

F. J. Cowdrey, formerly in the mechanical department of the Chicago & Northwestern and more recently associated with Willis C. Squire, Chicago, has opened an office at 315 Western Union Building, Chicago. Mr. Cowdrey will handle railway supplies, motors, generators and the "Daum Refillable" fuse shells.

The Chicago Railway Equipment Co. has purchased two tracts at the northwest corner of Lincoln and West Forty-sixth streets, Chicago, comprising 16.13 acres, for a total consideration of $111.145. The company has been occupying this property for some time under a lease.

The United States Metal & Mfg. Co., 165 Broadway, New York, has opened a branch office in the Morris building, Philadelphia, which will be in charge of Mr. L. Weimer Murray, formerly in charge of the company's office at Lebanon, Pa. The Lebanon office has been discontinued.

The American Electric Railway Manufacturers' Association has secured the use of Young's Million Dollar Pier, Atlantic City, N. J., for its exhibition in connection with the convention of the American Electric Railway Association, to be held October 9-13. Details concerning exhibits, hotels, railway facilities, etc., may be obtained from George Keegan, secretary, 165 Broadway, New York.

Alva A. Griner, western manager of the Dahlstrom Metallic Door Company, Jamestown, N. Y., has been put in charge of this company's New York office, A. T. Hansen taking his place as manager of the Chicago office. This company has opened new offices in Cleveland, Ohio, Detroit, Mich., and Pittsburgh, Pa. W. D. Callinan is in charge of the Cleveland office, in the Garfield building. S. C. Malmberg is in charge of the Detroit office, in the Ford building, and L. H. Gibson is in charge of the Pittsburgh office in the Henry W. Oliver building.

The Central Locomotive & Car Works, Chicago, has filed certificate of incorporation in Augusta, Maine, with $500,000 preferred stock and $100,000 common stock.

L. A. Irwin, formerly purchasing agent of the Quincy, Omaha & Kansas City, is now with the Western Railway Supply Company, Kansas City, Mo.

The annual convention of the American Railway Tool Foremen's Association is to be held at Wellington Hotel, Jackson Blvd. and Wabash Ave., Chicago, Ill., July 11 to 13 inclusive. This association was formed by Railway Tool Foremen to hold a meeting each year for discussing subjects pertaining to railway tool work.

Recent Railway Mechanical Patents

990,888.

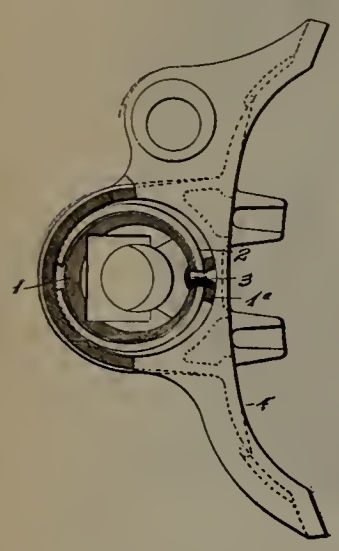

990,855.

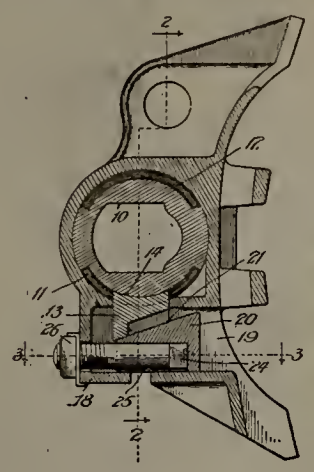

991,782.

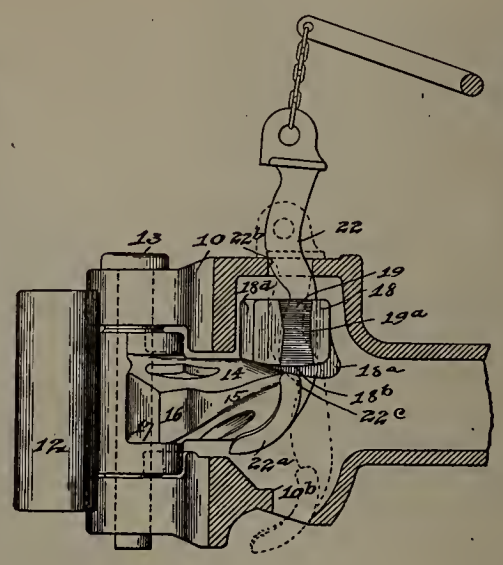

991,139.

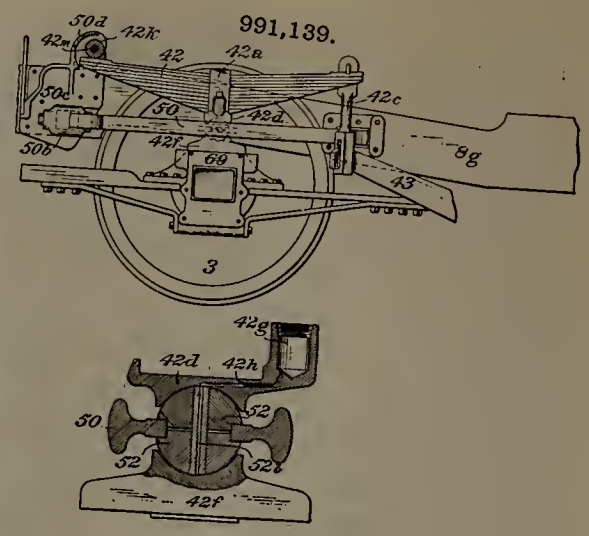

BRAKE-BEAM.

990,855—William E. Fowler, Jr., Hamond, Ind., assignor to Simplex Railway Appliance Company, Chicago, Ill.

This relates to an improved method of adjustably securing a brake head to a brake beam. The brake beam sleeve is provided with an arc-shaped slot 11 in which fits a locking block 13 carried by the brake head. By means of wedge block 20 and nut 26 the locking block may be forced into the groove so as to effectively secure the parts in position.

ADJUSTABLE BRAKE-HEAD.

990,888—Ernest A. Le Beau, Chicago, Ill., assignor to Chicago Railway Equipment Company, Chicago.

This is another form of brake beam and head connecting means. It consists of an annular leaf spring 2 carried by the brake beam and adapted to fit in a corresponding groove formed in the brake head and acts as a key to secure the parts together. Two other patents to this company in this same line are Nos. 990,889 and 990,938.

LOCOMOTIVE ENGINE.

991,139—Francis J. Cole and Frank F. Scoville, Schenectady, N. Y.

This invention relates to trailing trucks for locomotive engines and its particular object is to provide an improved connection between the spring and journal boxes. This conection consists of a ball or sphere on which the spring band rests and which is supported in a socket carried by the journal box. A floating yoke 50 is secured to the sphere in the manner shown in the illustration.

CAR COUPLING.

991,782—Robert E. L. Janney, Chicago, Ill., and Edmund P. Kinne, Alliance, Ohio, assignors to American Steel Foundries, Chicago, Ill.

The general objects of our invention are to provide a coupler which shall have a substantial lock wholly inclosed within the coupler head, said lock being maintained in position to allow the knuckle to be closed without being again lifted and which shall have a strong and substantial means of lifting the lock and opening the knuckle; such lifting and opening means being acted upon by the knuckle only during the opening movement and exposed beyond the normal position only during the act of uncoupling. These we attain in a coupler in which the uncoupling mechanism is adapted to the M. C. B. standard type of chain and clevis.

DUMP CAR.

992,192—Harry S. Hart and John O. Neikirk, Chicago, Ill., assignors to Rodger Ballast Car Company, Chicago, Ill.

A dump car having a frame, load carrying members which consist of bolsters and plate girder sides, a bottom comprising a series of three hoppers secured to the frame, swinging doors hinged to the sides and forming part of the car side, a swinging door secured to the intermediate hopper, and means for operating the doors.

CAR ROOF.

992,409—Raymond C. Dudley, Chicago, Ill.

A metallic car roof consisting of (1) a series of I-beam steel carlines, having their webs vertical; (2) laterally and upwardly flanged metallic sheets resting upon the bottom flanges of the adjacent opposed carlines and secured to the sides of the car; (3) laterally and downwardly flanged metallic caps straddling and resting upon the carlines and covering and inclosing the aforesaid flanged edges of the sheets; (4) saddles surmounting said caps and carlines; (5) means for binding said saddles, caps, and carlines to the ridge.

992,192.

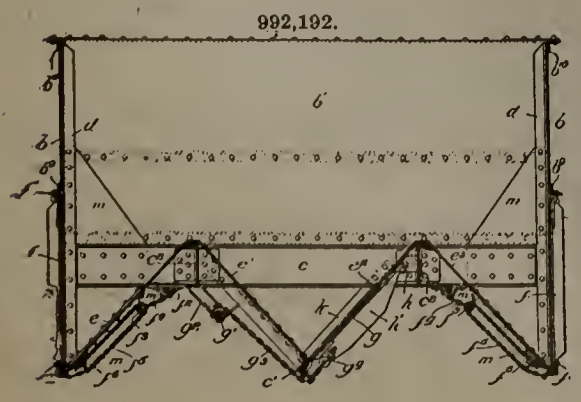

992,555.

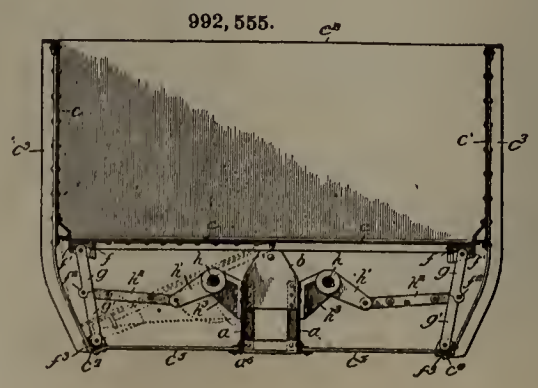

992,285.

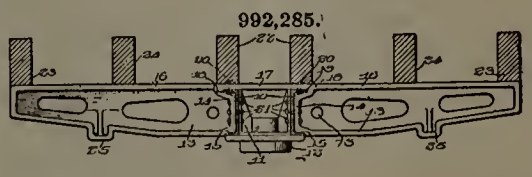

992,409.

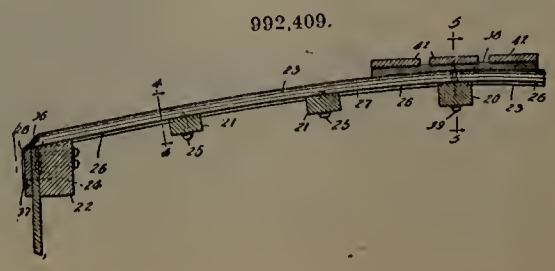

RAILWAY MASTER MECHANIC

Established 1878

Published by THE RAILWAY LIST COMPANY

WILLIAM E. MAGRAW, Pres. and Treas.
CHAS. S. MYERS, Vice-Pres.
C. C. ZIMMERMAN, Bus. Mgr.
J. M. CROWE, Mgr. Cent. Dist.

LYNDON F. WILSON, Managing Editor
OWEN W. MIDDLETON, Assoc. Editor
KENNETH L. VAN AUKEN, Assoc. Editor
WARREN EDWARDS, 2d V.-P. & Assoc. Editor

Office of Publication: Manhattan Building, Chicago
Telephone, Harrison 4948
Eastern Office: 50 Church Street, New York
Telephone Cortlandt 5765
Central Office: House Bldg., Pittsburg, Pa.

A Monthly Railway Journal

Devoted to the interests of railway power, car equipment, shops, machinery and supplies.
Communications on any topic suitable to our columns are solicited.
Subscription price, $2.00 a year; to foreign countries, $2.50, free of postage. Single copies, 20 cents. Advertising rates given on application to the office, by mail or in person.
In remitting, make all checks payable to the Railway List Company.
Papers should reach subscribers by the 16th of the month at the latest. Kindly notify us at once of any delay or failure to receive any issue and another copy will be very gladly sent.

Entered as Second-Class Matter June 18, 1895, at the Post Office at Chicago, Illinois, Under Act of March 3, 1879.

Vol. XXXV. Chicago, July, 1911 No. 7

CONTENTS.

Editorial—
The Mechanical Conventions 267
Paying Men to Think 268
Report of the Convention of the A. R. M. M. Association 268
Mechanical Stokers 269
Smoke Preventing Devices 270
Best Construction of Locomotive Frames 271
Main and Side Rods 273
Piston Rods and Crossheads 276
Repair Equipment for Engine Houses 279
Treating Water 281
Lubrication of Locomotive Cylinders 284
Consolidation 285
Superheated Steam 285
Safety Appliances 289
Design of Locomotive Boilers 290
Contour of Tires 292
Steel Tires 295
Flange Lubrication 296
Election of Officers 298
The Convention Band 299
List of Exhibitors 300
Admiral Schley at the Convention 323
Report of the Convention of the M. C. B. Association 324
Revision of Standards 326
Train Brakes and Signal Equipment 329
Test of Brake Shoes 334
Brake Beams 336
Rules for Loading Material 337
Coupler and Draft Equipment 338
Car Wheels 339
Safety Appliances 340
Revision of Code Tests 343
Refrigerator Cars 344
Consolidation 345
Revision of Rules of Interchange 346
Train Lighting 348
Train Pipe and Heat Connections 349
Election of Officers 350
Among the Manufacturers 350
United States Light & Heating Co. 350
Tate Flexible Staybolt 352
New Car Sill Dresser 353
New Lock Nut 353
Exhibit of Independent Pneumatic Tool Co. 353
American Radial Drill and Planer 354
Solid Steel Oilers 355
Victor Nut Facing Machines 356
Queen City Crank Shaper 356
Williams All-Service Car Door 357
Schumacher & Boye Lathe 358
Ryan-Johnson Coal Passer 359
Franklin Metallic Roof 360
Exhibit of McConway & Torley Co. 362
Exhibit of Buffalo Brake Beam Co. 362

THE MECHANICAL CONVENTIONS, 1911

Probably few of the readers of the *Railway Master Mechanic* are not interested in the conventions of the American Railway Master Mechanics' and the Master Car Builders' associations held in Atlantic City last month. We ask these few to pardon us for giving over this issue so completely to the report of these conventions. Perhaps even the disinterested ones will find much food for thought in the pages of the report if they can be influenced to peruse them. Since the importance of the mechanical associations grew to a point which warranted, the *Master Mechanic* has always devoted its July issue to a report of the proceedings and to the doings of the supply firm representatives at the conventions.

One of the greatest honors which may be bestowed upon an American railway official is that connected with his appointment to an office in the organization of either of these associations, and it may be said without fear of contradiction that the trust placed upon the shoulders of such officers has never been violated. Two of the most conservative men interested in railway operation this past year held the reins of administration: Chas. E. Fuller of the Union Pacific and Theodore Curtis of the Louisville & Nashville. While the same or greater ratio of advancement in quality of the work consummated was attained, the dignity and lack of friction which marked their administrations deserves comment. The chairs vacated by the retirement of these two men, while of very large size, will nevertheless be comfortably filled by their successors, H. T. Bentley of the Chicago & North-Western and A. Stewart of the Southern.

In our appreciation of the work of the two mechanical associations, we are perhaps prone to belittle the work of the half sister association which renders the conventions, in their present magnitude, possible. The honor attached to office in the Railway Supply Manufacturers' Association may not be so great, but any of the past incumbents can quickly dispel any doubts as to the quantity of work necessary to the successful arrangement and consummation of plans for the edification and amusement of the convention visitors. Particularly exacting are the duties of the various committee men for whose work the chairman are respectively responsible. These men in turn, reflecting as they do the policies of the administration, have this year brought exceptional credit upon the retiring president, E. L. Adreon. The appointment of B. E. D. Stafford, past vice-president, to succeed Mr. Adreon practically guarantees a continuation of the same efficient administration. The policy of selecting a worthy man for the office of secretary and then making it worth his while to continue in that office from year to year has proven its benefits in the meritorious service of J. D. Conway. It is to be hoped that he may be retained for years to come.

This year the work of the entertainment committee deserves the most unstinted praise. Its chairman, J. Will Johnson, of the Pyle National Headlight Company, was the busiest man in Atlantic City from the beginning to the end of the sessions. In so far as he followed the lead of those who have handled these matters in years past, his work was fairly successful, but that he did not stop here is evidenced

by the appreciation, among those interested, of several innovations, chief among which was a very passable convention brass band, made up for the occasion without the assistance of any outside talent. It is hoped that this feature will become permanent as its success in 1911 would seem to warrant.

PAYING MEN TO THINK.

It is not always easy for a man to see the benefit which he will derive from observing things which are apparently out of his regular line of duty. Some employees of railroads and industrial plants do not trouble themselves about the manner in which the company carries on its work; that is the company's business, it pays the bill, why should they? Again many are observing and do notice wastes going on but do not see that it is worth the trouble to make the effort to have them eliminated. They fear they will be looked on as trouble-makers, especially among their fellow-workmen should their suggestion result in increasing their work.

The policy which some of our leading roads have adopted of paying employees not in charge of men for helpful suggestions regarding the performance of work and the elimination of wastes is to be highly commended, furnishing as it does a direct incentive for originality and initiative among the men. Any suggestions are welcomed which will give greater safety to employees and patrons, which will result in improved methods of operation in shop or office and which will include the betterment of employes, thus giving every man a chance, no matter what department he may be in. There are many men who do not seem to realize that their brains are worth money, that their brains are an unworked gold mine in which the lead will not run out. Money is a very strong incentive and if men can by its use be induced to develop their originality it must result in a double good to the company—the direct benefit derived from the suggestion and the indirect benefit of a man developing himself for the company's good. Money cannot produce loyalty but it can open many minds to the fact that it pays to think and continually thinking about ways of improving the methods of the company, unconsciously will produce loyalty.

Report of the 44th Annual Convention of the American Railway Master Mechanics Association

The 44th annual convention of the American Railway Master Mechanics' Association was held in Atlantic City, N. J., June 14-16, inclusive.

WEDNESDAY, JUNE 14, 1911.

The first session was called to order by President C. E. Fuller, at 9:30 a. m. Rev. Newton W. Cadwell, of Atlantic City, opened the meeting with prayer, after which Mayor Stoy made his usual welcoming speech. H. T. Bentley (C. & N. W.), first vice-president, responded to the mayor's welcome.

Address of President Fuller.

On this, the occasion of the opening exercises of the forty-fourth annual convention of the American Railway Master Mechanics' Association, it is my privilege and sincere pleasure to extend to you a hearty welcome. It is an especial pleasure that we are permitted to gather for the sixth time in this beautiful spot, so happily called the "Venice of America." Its hospitality has been proven and has left only the most pleasant recollections.

I will not take up your time in dwelling upon the work of the association in the past, but will confine my remarks to the events of the year and to some of the problems which confront us.

The American Railway Master Mechanics' Association stands for progress, as evidenced by its growth and accomplishments since its inception; and at our annual conventions, or birthday celebrations, as we might call them, we review the work of the past and look forward to the future with brighter hopes and renewed vigor.

The year 1910-1911 has been a memorable one in so far as it relates to government legislation affecting the railways in general, and the mechanical department in particular. During this period federal laws have been enacted regulating safety appliances for railway equipment; also laws regulating the inspection and care of locomotive boilers. In some states there has been additional legislation, the full crew and caboose bills and headlight bills, while in addition to the federal legislation there has been in some parts of the east state legislation with regard to boiler inspection. In view of the federal and state legislation on the same matters, it would seem every possible effort should be made to have the state laws either withdrawn or amended to agree with the government legislation.

In the matter of safety appliances your committee, in conjunction with the Master Car Builders' Association, has had this work in hand and has given a great deal of time to it, conferring with the government officials as well as representatives of the railway employees, and a set of rules was formulated covering the requirements.

In my opinion, this association should insist on the Interstate Commerce Commission furnishing necessary drawings specifying in detail the location of safety appliances.

Your committee also gave considerable time and work to the boiler bill, and in conference with the government officials arrived at rules governing the same.

As the work of your special committee on the Safety Appliance and Boiler bills has now been completed and as both of these have to do exclusively with technical matters which can properly be handled by mechanical men, it would seem the future work in connection with these matters should be taken over by the association, and I would recommend the appointment of a committee to handle it. In this connection I cannot too strongly recommend that the members of this association conform promptly to the requirements of the Safety Appliance and Boiler bills, which will indicate to the commission that the railways of America are ready to comply with the law if the requirements are clearly known.

It also appears to me that the requirements of the Safety Appliance act as well as the Boiler bill should be embodied in and adopted as the standards of this association.

In view of past legislation on matters pertaining particularly to the mechanical department, it would seem to me that the policy and work of this association should be more clearly outlined than ever before.

Our experience emphasizes the necessity for looking forward and taking such steps toward uniformity as will enable this association to take the initiative in these matters. I believe this is an opportune time for members of the association to get away from a great many of their personal opinions and get together and agree on the best standards and practices to a greater extent than ever before, and having arrived at such standards, they should be followed. Uniformity and Unity should be the keynotes of our future endeavors. The present conditions, so far as railway operation is concerned, have brought out in the columns of the various technical journals and elsewhere the thoughts of many master minds; and, while the trend of my remarks may not be along entirely original lines, I have selected such thoughts as seem to me to be the most pertinent to our needs.

In reviewing these articles and considering the situation and problems to be met, the small word "Unity" stands out above all others. Unity is the strength and support of any organization. The framers of the constitution of the great country realized it as we must realize it. We talk of scientific management and efficiency, but we must remember that there is nothing truer than that much quoted but golden sentence, "United we stand; divided we fall." Unity means harmony and co-operation, and by united effort will the desired results be obtained.

With united strength we can lead, not follow. This association stands alone and unique—the strongest mechanical organization in the world; yet our work is not being felt as it should be felt, owing to the fact that some of the individual members do not follow and carry out the recommendations of the association. This association for years has had committees on the most important matters and the work should not become lost or buried.

It is not my intention to criticize, and I hope my remarks will not be so taken as this is far from my thought or purpose, but I am very much afraid that our work is to a certain extent lost sight of, due to the fact, that the association has not taken advantage as it should of that which has been done, and has not adopted recommended practices nor have such practices been printed in the proceedings, as they should be from year to year.

Recent discussion and events have brought rather prominently to public view the question of efficiency and economy in railway operation, but it is far from a new subject so far as those engaged in railway work are concerned. As railway officials ,efficiency and economy have been our constant watchwords. Much has been done. The installation of the most modern rolling stock and shop equipment has brought about greatly increased efficiency in railway operation. The commercial feature of our operations has been watched with consequent increased efficiency in shop management.

Publicity has not until recent years entered very largely into railway operations and the public has not been fully informed of the efforts and accomplishments of the railways along the lines of efficiency and economy. Railways have a very deep interest in having the public correctly understand the achievements which have been made. Every published statement reflecting credit on the railways whether relating to their good intentions or their able management strengthens them in the public esteem and tends to promote a calm and wise solution of the problems of governmental regulation. There is among us no disposition to evade discussion of our efficiency.

So far as the mechanical department is concerned, our efforts have not been sufficiently brought to the light of public recognition. We have been content with the satisfaction which comes

from appreciation expressed by those best in position to judge. The operation of American railways has been praised by the highest authorities abroad as the most efficient and economical in the world. We have spent our lives in learning all we could from any quarter whatsoever which might be useful in promoting efficiency and increasing economy.

What is the purpose and significance of this convention? This is the forty-fourth annual meeting of the American Railway Master Mechanics' Association. During a span of nearly half a century the railway companies of this country have delegated the responsible heads of their mechanical departments to attend these annual meetings. Here each of us in turn gives his best thought and the result of his own experience to the others. Here the standard of efficiency and economy in the performance of every function incident to the manufacture and maintenance of cars and locomotives has been advaned by comparison of experience and of views. Here we have had the suggestions of men not our members. It has mattered not to us what was the source of help.

The public should know that of all the enterprises of the country no other approaches the railways in systematic and persistent study of efficiency and economy.

In addition to this mechanical organization the officials connected with the maintenance of way have their engineering association which meets annually and whose purposes are similar to ours. Our foremen of the various branches of the work have their organizations meeting annually to exchange ideas and improve the efficiency of their members.

The entire territory of the United States is divided into sections, each having its territorial railway clubs and organizations for the furtherance of research and efficiency along specific lines. The existence of these organizations comprising the efficient managers and department heads of the railways, all endeavoring to systematize and improve operating methods is cited simply as additional evidence of what the railways are doing to bring about improved methods and increased efficiency.

From the foregoing you will readily appreciate there is very much that the American Railway Master Mechanics' Association can do along the lines indicated.

I see no reason why this association should not have as a part of its recommended practices, mechanical plans for large and small terminals, units embodying the best practices, so that if conditions are such that these plans in their entirety are not feasible or practicable it will be possible to take therefrom the best available features under which shop layouts can be designed. There are a good many of the railways that do not employ large and expensive engineering forces and such plans would be of infinite value to such members.

A very pertinent subject in connection with the matter of increased efficiency, to my mind, is the education of our apprentices, in fact, of all our employees. By what better method can we hope to increase our efficiency than by setting a high standard for the young men we are educating, from whom we must be able to draw our foremen and shop managers? Progress has been made by some of the individual lines not only in the way of educating apprentices, but also giving other employees similar advantages by instituting plans of broad scope with educational bureaus open to all employees. It is my opinion that in line with these efforts our association should adopt a recommended apprentice system for apprentices to the various trades as well as for the technical graduates, commonly called "special apprentices."

On the recommendation of my predecessor a committee was appointed in connection with the establishment of a permanent technical bureau within our association. Such a bureau cannot help but be a valuable asset of this association and I cannot too strongly endorse the wisdom of this plan, which I hope will be carried out at an early day. I have indicated the work which has been accomplished by the special committee which conferred with the government officials in the matter of safety appliances and the boiler bill. This simply illustrates what can be done and the value of a centralized bureau to handle subjects which are of a mechanical nature is, it would seem to me, apparent.

By invitation this association had a representative in attendance at the annual meeting of the Conservation Congress. The aim and work of this congress are something in which every member of this association is vitally interested, and I believe it should have our co-operation and support in every way possible.

The question of consolidating this association with our sister association, the Master Car Builders', has been discussed for some years, and there has been considerable agitation of the matter for the last three years. Committees have been appointed, but up to the present time the proposition has not been settled. It has been the opinion of a great many of the members that the consolidation of the two associations was not feasible and practicable and I leaned to this opinion, but the more I have studied the subject the more I have become impressed with the idea that the union of these two associations will enable us to carry on the work in a far more satisfactory manner. Those of us who have worked in both associations realize what an extra amount of work and time two associations mean for the individual members, and I personally feel the time is ripe for this consolidation or union of the two associations, and I believe the committee should be so instructed to perfect plans so that this consolidation can be accomplished as quickly as possible.

There are a number of important matters confronting railways at this time which should receive our earnest attention and co-operation. We have under consideration and have had committees appointed to investigate during the past year some fifteen subjects comprising important mechanical problems of today, and I trust that the reports of the committees will be carefully analyzed and freely discussed to obtain the full benefit of the able work which has been done.

I would call particular attention to the report of the committee on Design and Construction of Locomotive Boilers. In my opinion this association should arrive at such standards for boiler design as will be adopted and followed by all members.

Before closing, it seems fitting that mention should be made of the efforts of the Railway Supply Manufacturers' Association, which is entitled to a hearty vote of thanks for its magnificent display and the opportunity afforded members of this association to inspect the many new machines and appliances. Gathered about these conventions there has grown up year by year this imposing exhibit with many miles of mechanical displays representing the most complete exhibit of its kind to be found anywhere in the world. Immediately accessible are inventors and designers ready and willing to discuss the merits of their devices. Our sessions are so scheduled that several daylight hours every day can be devoted by the delegates to the study of the very latest suggestions in the way of modern equipment and appliances by which we are enabled to bring about increased efficiency and economy. I desire to urge on every attendant at this convention that he take full advantage of this opportunity.

In conclusion I wish to express my sincere appreciation of the co-operation and assistance of the officers of the association, committees and individuals who have assisted in preparing reports and otherwise rendered efficient service in the work of the association. To you all I extend my heartfelt thanks.

Secretary's Report.

Secretary Taylor presented his report, which showed that the active membership in June, 1910, was 952; since that time there were transferred to honorary membership, 6; deaths, 11; resignations, 13; dropped for non-payment of dues and mail returned, 1; being 31 deductions from the list as it appeared in June, 1910. During the year there were 78 new members elected and one member re-instated, making the total membership at the present time, 1,000. The associate membership is 20, the same as in 1910. The honorary membership is 43, being an increase of 6 since 1910. The total membership is now 1,063. The following deaths have been recorded: Active members: D. F. Van Ripper, H. H. Johnson, J. B. Gannon, A. J. Dunn, David Brown, Wm. Buchanan, H. S. Bryan, G. J. DeVilbiss, P. G. Thomas, J. P. Picciolo and S. K. Hatah. The secretary presented the treasurer's report which showed an income of $6,036.90, and expenses of $5,940.77, leaving a balance of $96.13.

The recommendation of the executive committee that the dues for the ensuing year be fixed at $5 per vote was adopted.

C. H. Rae (L. & N.), J. W. Fogg (B. & O. C. T.), and M. J. McCarthy (C. C. C. & St. L.) were elected members of the auditing committee.

The following committees were named to prepare obituaries: T. Rummey, on D. F. Van Ripper; J. W. Taylor, on H. H. Johnson; G. W. Wildin, on J. B. Gannon; Angus Sinclair, on David Brown; J. J. Conolly, on H. S. Bryan; M. A. Kinney, on G. T. DeVilbiss, C. E. Chambers, on P. G. Thomas, and J. W. Taylor, on J. Picciolo.

The association has four scholarships at the Stevens Institute of Technology. The expenses of the student at the school is taken care of by the fund that we have there, but it does not include boarding. There are no vacancies at the present time and there will not be any until September, 1912. The scholarship at Purdue University given by Joseph T. Ryerson & Son, for which they appropriate five or six hundreds dollars a year, takes care of the school expenses as well as boarding the student. The present student graduates this spring, and the Ryerson people are willing to extend this another four years if the association desires to co-operate with them. The executive committee accepted this offer.

The president stated that there had not been the expected number of applicants for scholarships and that the members should be reminded of its existence.

COMMITTEE REPORTS.

Mechanical Stokers.

The committee reports that such progress has been made in the development of mechanical stokers as to warrant railways installing a limited number upon large locomotives at least, and thus lend their aid in the perfection of a device which the committee has concluded is a necessary appliance to heavy tractive-power locomotives. The committee is of the opinion that it behooves the members of this association to participate actively by utilizing such stokers as have been developed, and, by actual application, assist in the solving of the many problems which must naturally present themselves during practical operation. The benefits to be derived might properly be again referred to, viz.: Utilization of the maximum boiler capacity of locomotives. Reduction of black smoke, because of the possibility of maintaining a thin, level fire. Application of coal in more minute quantities. Improved life of flues and fire boxes. The reduced labor required should make the positions of firemen more attractive, which will carry therewith obvious benefits to the railways.

The requirements for mechanical stokers, as recommended by your committee, in brief, are: That they should be capable of firing coal in excess of the maximum requirements of the locomotive. That the fire-box door be free of any attachment which would prevent the fireman from giving such attention as fires may require. That they be entirely mechanical from tender to grate and capable of handling bituminous run-of-mine coal, which will include a coal crusher, mechanically operated, on the tender. They should distribute the coal in the fire box in such a manner as to call for no assistance from the fireman other than regulation of supply and possibly the adjustment of the mechanical appliances for distribution and maintain an ideal fire for economic coal consumption without emission of black smoke in objectionable quantities.

Previous reports of the committee have directed attention to various mechanical stokers under development, and a summary upon each is presented, with such remarks as are believed pertinent to the subject.

Crawford Underfeed Stoker.

This stoker is in service on the Pennsylvania; its operation has been satisfactory; it is completely mechanical and aims to cover every requirement set forth.

Barnum Underfeed Stoker.

This machine is in the process of development and so far has been used as a distributor only, requiring coal to be shoveled into the hopper. The reports from the Chicago, Burlington & Quincy indicate that the mechanism operated satisfactory, burning an inferior grade of fuel, showing economic results. It is in successful operation on a six-wheel switch engine and a prairie freight engine. A method of crushing coal on the tank and delivering it to the hopper on the engine is now being developed which will make the device meet all the requirements enumerated.

Strouse Overfeed Stoker.

The manufacturers have increased the scope of the apparatus, which formerly consisted of a distributor only, by adding a conveyor from tender. Satisfactory service has been obtained with regular crews, but the development to date does not permit of complete report.

Street Overfeed Stoker.

There are ten machines in service, including four on the Lake Shore & Michigan Southern, one on the New York Central and the remainder distributed on five other railways. The stoker

is designed to meet every requirement suggested by the committe, and is successful in its operation.

Hanna Overfeed Stoker.

The stoker has been developed only as a distributor. Consequently, it falls short of the requirements set forth, inasmuch as run-of-mine coal can not be handled, and shovelling from tender to a hopper is necessary. The device distributes coal into the fire-box very satisfactorily and is rendering good service on the Queen & Crescent, operating on Mallet, consolidation and Pacific type locomotives. The Hanna stoker is a coal distributor of the overfeed type, using steam jets. The coal is shoveled into a hopper and then pushed up a conduit by means of a short screw. From the conduit the coal falls over a ridge plate onto the fuel-distributing plates, in front of the steam jets. Two wings move over the ridge plate in such a way that the coal is distributed in a cycle over the grates. These wings are also adjustable so that coal may be concentrated on any portion of the grates. They are actuated by a set of levers, connecting rods and ratchets from the main shaft of the stoker. The motive power is furnished by a small two-cylinder reversible engine. The entire device is self-contained and bolts rigidly onto the back boiler head of the locomotive. No mechanism is provided to crush all classes of coal or to convey the coal from the tender to the hopper.

Hayden Stoker.

The original design failed in two particulars, unreliability and poor design of conveying mechanism and the burning out of coal-distributing plate. The modified distributor developed independently from the conveyor avoids the distributing coal plate in the fire box and is giving satisfactory service on the Erie.

Dickinson Overfeed Stoker.

This is a further development of the principle involved in the Hayden stoker and seeks to fulfill the requirements of the committee. It is in operation on the Erie and giving satisfactory results in regular freight train service.

Brewster Underfeed Stoker.

One of the above was recently applied to a locomotive on the Erie, but owing to modification being required the time was too limited to permit of the results being included in the committee's report. The stoker is designed to meet all requirements previously mentioned. It consists in part of a screw which is placed in the bottom of the tender and covered with movable steel plates, so arranged that a gradual flow of coal is admitted to the screw. The coal is conveyed by means of this screw through flexible coupling to a point below the grates. It is then carried upward through the grates by means of a second screw to the steam jets which are on a level with the bottom of the fire-box door. The blasts from the jets, which work intermittently, are adjustable to meet any condition of fuel or size of fire box. The grates are divided into four divisions, two on each side, and by means of a cam—one section at a time—they are tilted slightly forward to advance the fire and agitate the grates sufficiently to keep clear of ashes. The whole arrangement is operated by a small double-cylinder engine, located on the left side of the locomotive, below the cab.

Summary Remarks.

Tests comparing inferior fuel used with mechanical stokers to regulate supply for hand firing, thus taking advantage of difference in present fuel values, should not be accepted as proof of economy, as such relations would not maintain with the extension to any appreciable number of mechanical stokers. The progress during the past year has been sufficiently marked to lead the committee to believe that it can present a final report at the next convention upon at least several of the stokers which have already been developed sufficiently to perform actual continuous service.

This report is signed by:—T. Rumney (Erie), chairman; E. D. Nelson (Penn.), C. E. Gossett (M. & St. L.), J. A. Carney (C. B. & Q.), and T. O. Sechrist (C. N. O. & T. P.)

Smoke-Preventing Devices for Firing-up Locomotives.

The committee sent out a circular of inquiry and many of the largest railway companies who have terminals located within the large cities where the restrictions are most severe were included in the 33 replies received; hence, we believe that this subject has been more thoroughly canvassed than might otherwise appear. The various reports and the experience of the individual members of the committee would lead to the following recommendations:

The best results are obtained by filling up locomotive boilers with hot water previous to firing up; the temperatures reported vary from 110 deg. F. to over 200 deg. F., but the higher is preferred on account of aiding combustion and lessening the time required to raise steam in the boiler. Where hot water is not available, the temperature of water in the boiler may be raised by injecting live steam below the water line; but on account of the loss of time the heating of the water, either before or while the boiler is being filled, is recommended.

Two roads reported the use of large fans, connected with the smoke jacks above the roundhouse roof, as a means for producing draft. One of these roads advises that this device was used and tested for a considerable length of time, but was found unsatisfactory and abandoned. The other road is still experimenting along this plan in connection with a smoke-washer, and is not yet ready to report upon its results except as to its difficulty in the maintenance of the plant—the material parts having been eaten out several times during the year's experiments. All other roads report the use of a roundhouse steam blower and the locomotive blower used exclusively.

From the reports it would appear that almost every combination of wood, fuel oil, shavings, cobs, coke and bituminous coal had been used, with more serious objections to some than others. Several roads reported extensive trials of coke, but its use has been almost entirely abandoned because the ashes and gases emitted from the smoke jacks are much more objectionable than smoke when roundhouses are located near viaducts or high buildings; furthermore, it is almost impossible for employers to work in the roundhouse when engines have to be moved from under the smoke jacks to do necessary work, and also the cost of coke is greatly in excess of other fuels in most sections of this country. While the smoke from wood varies considerably in accordance with the size, quality and amount used, still it is more generally employed for kindling fires than any other fuel where the greatest effort is being made to prevent smoke at such times.

The plan of raising steam to nearly working pressure by means of wood or coke alone has been tried by many roads, but abandoned when it was found that the same results could be obtained by adding bituminous coal carefully to wood fire after the temperature in the firebox had been somewhat raised.

In general the conclusion is that although there are many devices for reducing the amount of smoke from locomotives after steam is raised and the engines are working, and while it is possible by great care and attention on the part of the roundhouse force to reduce the amount of smoke emitted during this period, there is no practical way to entirely eliminate all smoke while firing up locomotives at terminals.

The report is signed by:—E. W. Pratt (C. & N. W.), chairman; J. C. Mengel (Penn.), R. W. Bell (I. C.), J. B. Kilpatrick (C. R. I. & P.) and E. F. Jones (C. & W. I.).

Discussion on Smoke Preventing Devices.

A. E. Manchester (C. M. & St. P.): The recommendations of the committee are directly in line with our best efforts, the filling of boilers with hot water. The only point that they do not refer to is time. It is decidedly of advantage to take sufficient time so that the work of bringing an engine up to steam pressure is done slowly. We have found nothing better than kindling wood to start a fire with, a good liberal allowance of it, and then to feed the coal in slowly and have the coal well broken up as it is fed into the fire box and use the force blowers to assist the fire to burn readily. With us, following these methods, we have found is largely a question of keeping our men up to their work and not let them hurry it. Just as soon as you begin to hurry the men, why, they begin to do the very things that produce smoke and cause trouble.

W. C. A. Henry (Penn.): Our experience has been pretty much covered by what is stated in the remarks of Mr. Manchester. The point where smoke is objectionable is in using shavings saturated with oil. Where smoke is objectionable to the city authorities we have taken old ties for firing up, and by not hurrying very much we have been able to make a very considerable reduction in the quantity of smoke emitted, yet at the same time there is smoke.

J. W. Fogg (B. & O. C. T.): I think our best results have been secured in using kindling wood where you have the roundhouse, men thoroughly drilled. If they get careless in the roundhouse, why, it does not eliminate the smoke nuisance. We have found that if we apply kindling wood and then apply the coal very lightly we get good results.

T. H. Curtis (L. & N.): About eighteen months ago we equipped one of our roundhouses with a smoke washing device which had been recommended to us by the smoke department of the city. This device consisted of a duct connecting the smoke jackets in the roundhouse through and to a fan, and from there to a large tube into which was injected a spray of water, and the washing of the smoke precipitated the carbon and made it very much less objectionable. We constructed these ducts of steel, and before we got the thing fairly installed or running more than six or eight weeks the first duct was found to be entirely eaten out, due to the combination of the gases and moisture. We renewed the duct with wood. Then when we looked at the fan we found that the fan blades were eaten out and the fan housing had begun to go, and that the whole thing was practically a wreck.

R. D. Smith (B. & A.): We are working under very strict conditions in relation to smoke in the city of Boston. We have in all of our important terminals hot water wash-outs. I find that the recommendations of the committee are about in line with the best practice as we have found it in our experience. A great deal depends on the fellow that is doing the firing in a roundhouse, and whether you are in a hurry for the engine or not. With the hot water wash-out system, where you can fill and wash out with hot water, we find that firing with ordinary kindling wood is about all that we can do. We object, however, to using old ties or old discarded wood for firing of locomotives. The reasons for that are the likelihood of spikes and nails being in the ties and getting into the fire-box, getting caught in the grate and causing engine failure. So we try to keep away from the use of old wood unless it has been looked over carefully.

S. L. Bean (A. T. & S. F.): We have very little trouble with smoke. We employ all kinds of men to build the fires—Japanese, Mexicans and Indians. We obtain very good results, especially at the prominent terminals. At Los Angeles we probably handle two-thirds of our locomotives in firing up, and by handling the oil carefully it can be so regulated as to avoid the emission of smoke.

M. J. McCarthy: I might say that the practice with us is about the same as that recommended by the committee. While we do have some black smoke necessarily, we find that by paying great attention and care to the operation of firing we can do away with the most of it.

Angus Sinclair: There is no question but what leakage used to frequently occur, and fractures too, by reason of very violent fires being started up to begin with, as, for instance, when they sought to get up steam in a hurry. This trouble might be experienced with locomotives where you were firing with oil if you were to start the fire too violently at the beginning, and the query in my mind was whether it was not better for the sake of safety to fire up gradually.

S. L. Bean: I would say that of course it is necessary to be careful in handling the oil. Not only that, but if you allow your atomizer to work too strongly at the start the oil will drip and there may be danger through that of a conflagration.

C. E. Chambers (C. of N. J.): We use old ties, as much as we

can get them, and have never had any trouble, as Mr. Smith spoke of, with the nails or spikes. We at one time used fuel oil, but for the last three or four years we have used gas tar, which is a bi-product recovered from the manufacture of pintsch gas. We use that for firing our locomotives, and we sometimes fire them with coal alone, and sometimes with wood. The latter process makes a great deal of smoke, and where you are held strictly to account by ordinances aimed at the smoke nuisance, if is not so desirable.

C. E. Gossett (Iowa Cent.): I have tried all manner of schemes that I could think of, or have seen in print, in order to obviate this trouble, and I have come to the conclusion that there are but two points we can consider, the first is to not hurry your men in firing up the engine, and the second is to use as much wood as you can get—the more wood the less smoke.

J. F. DeVoy (C. M. & St. P.): I have made efforts by personal observation and inspection to get our engine men to control the volume of smoke in firing up by care to the method in which they do the firing. I have found no fault with the Ringelmann system, and I have stated to city inspectors when an engine passed by, under full head, working full, that in my honest opinion there was not 10 per cent of smoke, and the inspector has called that steam. I simply want this committee, or the other committee to define how far the Ringlemann chart shall be used in connection with the locomotive.

Wm. Bawden (St. Louis Ter.): We fire up 125 engines right in the city, and the smoke question is a live one there at the present time. We find, however, that our experience is about in line with the report of the committee. We have not been able to find a way to eliminate the smoke during the firing up of the engines. We have used old ties, generally with very considerable trouble, on account of the spikes and bolts, and things of that sort. We have, however, a device which is being put into use called the Parsons system of combustion, and we expect to eliminate the smoke to the extent of about 50 per cent. The Parsons system of combustion is a very practical device on the road, and eliminates from 80 to 95 per cent of the smoke

John Tonge (Minn. & St. L.): I wish particularly to say that your expressions here will have considerable weight in these lawsuits which are pending, based on the Minneapolis ordinance, and the weight of your opinion will be in favor of the railways. I have no doubt that the railroads will follow this matter to the supreme court of the United States if the state courts of Minnesota say that we must use smokeless coal in order to obviate this difficulty. The smoke inspectors are very arbitrary—they say they do not comply with the ordinance, and they are going to compel us to eliminate the smoke emitted from the engines. The commercial club of that city will get together, get the business men together, and they even go so far, gentlemen, as to say and to intimate if you do not do so and so we will ship our goods by another railroad. So I say, what you say here to-day, whatever evidence you can give us on this subject will assist us very greatly.

A. E. Manchester (C., M. & St. P.): I think we might perhaps ilve under some of the laws that are being enacted if we were given an opportunity to have them interpreted by the Supreme Court of the United States as to the "reasonableness" or "unreasonableness" of these laws, especially the ordinances against smoke.

E. W. Pratt: Menton was made by one member of the use of the air blower, and I judge that is merely to induce a draught. There seems to be no reason in the minds of the committee why an air blower for inducing draught would be any better than a steam blower, nor quite as good. Mr. Bentley described our smoke washer, with which we are still experimenting, but I might add that in order to reduce the concentration of the sulphuric acid in the water that is used to wash the smoke, it takes about a half a million gallons of water a day, which at seven cents a thousand gallons represents about thirty-five dollars a day for water.

The ordinances of several of the cities contain the words dense smoke, which the railway men generally call black smoke, and which is interpreted as smoke through which objects are not readily discernible. A large locomotive generally develops 1,500 h. p. and perhaps has a stack 22 in. x 24 in. in diameter. While the velocity of the gases and smoke is greater than a chimney or stationary stack would be, there seems to be a good deal of feeling that the density of the smoke from that small diameter of stack would be greater, especially when mixing that smoke with steam or condensed steam, which is a combination not readily penetrated by the vision.

With regard to the use of the Ringelmann chart, and its use in viewing moving trains, it is practically impossible for an observer, unless he is on the train, which they seldom are, to see a locomotive stack at the same angle. They see an engine and a train approaching, when, no matter which direction the wind is in, they get at an oblique angle through the trailing smoke, and then they later see the locomotive receding and get about the same angle, whereas we all know if you see a stack approaching and look through the smoke, it looks very much more condensed than it does when you stand at one side and see a train moving at right angles to you.

The replies of the committee indicated that where wood was rather scarce the use of old ties, and especially scrap car wood, was the general practice.

Best Construction of Locomotive Frames.

The committee, called upon to make a report on locomotive frame construction, has given the subject very earnest consideration. Lawford H. Fry was unable to meet with the committee on account of living in Paris, but sent information showing the practice and experiences of various foreign railways. At the convention in 1904 this subject was ably handled by a strong committee, and notwithstanding the great increase in size of locomotives, the committee's recommendations still hold good and the frames still break. Cast steel, made to a rational specification, careful foundry manipulation, adequate and suitable annealing, was spoken of as one of the remedies for frame breakage at that time, and it still is the favorite material, if properly designed, made and annealed. The clip binder was then, and is now, more used than probably any other type, the bolt and thimble style having been discarded in modern practice, owing to stretch of bolts. The specifications suggested by the committee of steel-casting manufacturers, and submitted to the association in 1904, are as follows:

Material:

Acid open-hearth steel.....
.28 per cent carbon.
.05 per cent phosphorus.
.05 per cent sulphur.
.60 per cent manganese.

Frames will be rejected that show:

Less than .20 per cent. or over .35 per cent. carbon.
Over .06 per cent. sulphur.
Over .70 per cent maganese.

Tensile strength per square inch, not less than 55,000 lbs.
Elongation in 2 in., not less than 15 per cent.
All frames to be annealed.

After seven years it would be interesting to learn from the members if these specifications are entirely satisfactory, or, if not, what changes should be made to make them so. While the breakage of a frame is a serious handicap, especially during busy seasons, yet the work of repairing has been simplified so that is now possible to weld them in place with Thermit, oil, etc., and what used to be a two weeks' job, when all wheels had to be removed and frame taken to blacksmith shop, can now be repaired in place by dropping one pair of wheels and using oil, etc., and engine returned to service in a few days.

The committee herewith submits conclusions and recommendations:

1. That frame breakage is even more general and serious than was first believed, very few roads being free from this trouble. The longer the wheel base of engine, ordinarily, in combination with a roadbed having comparatively short curves, and with frames poorly designed or of inferior metal, or engines not properly kept up, the greater the trouble will be with frames breaking. This latter factor may not be reflected until after the engine has been put in good condition, and then a frame may finally break as a result of the previous poor condition of the engine.

2. The committee believes that with frames properly designed, if made of a good quality of cast steel, thoroughly annealed, with suitable cross bracing and engines kept up in reasonably good shape, breakage will practically be overcome.

3. That a cast-steel, one-piece frame, properly designed, of good material and thoroughly annealed, is better than a wrought-iron frame, because of the difficulty in welding up the large section in a perfectly satisfactory manner, and also because, in casting, bosses, lugs, etc., can be added without the necessity of bolts and studs.

4. That a bar frame is better than a plate frame, this being the opinion of people who have used both; the plate frame causing about as much trouble with the breakage in Europe as bar frames do in this country.

5. The strap binder appears to be the favorite form of tying frame jaws together, although the cast-steel box binder, with adjustable wedges, has a number of friends, on account of its simplicity and ease with which it can be handled. The toes at base of jaws should be of sufficient depth and size to give plenty of metal to anchor to, whichever binder is used.

6. Cases have been reported where frame breakage was directly traceable to expansion of boiler not being properly taken care of by the use of sliding shoes; these shoes, if too tightly fitted or cramped in bolting, or if not lubricated, may prove unsatisfactory. Supporting a boiler by means of vertical plates, if of sufficient strength, provides a satisfactory means of taking care of expansion without imposing undue strains upon the frames.

7. The committee recommends to steel manufacturers the necessity of making a study of locomotive-frame casting, and its proper annealing, as a number of roads are using wrought iron, but would prefer steel if they could secure reliable castings.

8. As a general proposition, frame breakage does not ordinarily occur until engine has been in service two years or more, the older the engine the greater the trouble; they have broken earlier than this, however, on account of flaws, poor welds, or other defects.

The following is an abstract of replies to questions:

The breakage of locomotive frames appears to be very general, from the nature of replies received, as twenty-four representative roads out of twenty-five stated that they were having trouble in this direction; one road, with only fifty-nine engines, reported no trouble; another says, having some trouble, but nothing serious, while a third replies that, with cast-steel frames, considerable difficulty is experienced.

The absence of frame breakage reported by the Trinity & Brazos Valley, having fifty-nine engines, is explained by Mr. Sea-

brook, the superintendent of motive power, and a part of his reply follows:

"We attribute our success in preventing frame breakage to engine-house attention. The engines are entirely looked after by the engine-house force. Engineers are not held responsible for the inspection of engines underneath. When an engine arrives at the engine-house, the inspector makes a very thorough inspection, and every bolt that shows any indication of working is immediately removed, the holes reamed out and a new bolt applied. Whenever it is possible, our practice is to equip each bolt with two nuts. This engine inspector also looks after the setting of wedges and keying up the rods, reporting the work that is necessary to the engine-house foreman, who assigns the men to make the repairs. The age of engines runs from four to twenty-five years; the worst curve on the road is 9 deg. 30 min."

The committee found the frame breaking difficulty was being solved in a number of ways. The binder and bolt appear to be responsible (when not kept tight) for considerable trouble; some roads report that they watch this very closely. Another road is applying new and heavier section to frames that are breaking. Reinforcing frames and lengthening splices is reported as being helpful. Where wedges are not kept properly in place there will be more liability to frame breakages than where they are kept snug. Splices working will cause strains to be thrown on other parts of frame, and probably cause breakages. Extending the short top-splice back over the front-pedestal jaw has relieved some roads of trouble. The adoption of the Walschaert, or other outside valve gear, has probably done more to overcome trouble than anything else, on account of allowing additional bracing and stronger frames. Some roads have increased the thickness of metal in both rails of frames and have applied heavier cross braces. One reply indicated that the movement of driving boxes so that top of the box would strike the frame was a bad thing for the frame, and for the engine crew. Revised valve setting, so as to reduce compression, is reported to be helpful. It is stated that applying hammered-iron sections has also overcome the difficulty.

The committee also received a number of replies to the question: "Have you any data as to age of frame at time of breakage?" and found that few breakages occurred in less than two years from date the engine was built, but after that the breakages became more frequent as age increased, cast-steel frames appear to be more unreliable than forged frames, some of the latter running from four to eight years before giving trouble. On some roads the change of valve gear from inside to outside, when accompanied by suitable cross bracing, has apparently overcome the difficulty, but in other cases it has been aggravated.

The replies received indicate that all of the heavier power is more liable to breakage than the lighter engines, which would seem to indicate that the strength of frame has not increased in the same ratio as the power of the engine. The Atlantic, Pacific, Mogul and consolidation types seem to be giving lots of trouble on the different roads, and engines with inside valve gear appear to be more troublesome than with outside gear; this being probably due to their age and the larger number in service. Cast steel and wrought iron are about equally used for frames, the former breaking due to poor castings, defects, shrinkages, etc., while the greatest difficulty with the latter is in getting sound welds. To show the extent that frame breakages occur, one road in the United States had thirty-nine per cent of the total number of engines passing through the shops with frames broken, so they had to be welded—those, of course, being bar frames—whereas one English road with 1,545 engines, having slab frames, had over ten per cent of this number broken; but it was stated that frames could now be welded with oxy-acetylene in two or three days, whereas before it used to take them several months to make repairs. It is stated on excellent authority that cast steel does not have as great a life as wrought iron in locomotive frames. On one road the breakages were tabulated, and show that of a certain number of engines the life of the wrought-iron frame averaged 5.9 years, as compared with 5.5 years for cast steel, and that on account of the great difficulty in getting homogeneous metal, uniformly annealed, wrought iron was preferred. A large number of breaks occur from checks started in key ways, and it is suggested that proper fillets be made instead of leaving sharp corners. Switch engines appear to be particularly free from trouble on account of frames breaking, which may be due to the fact that their frames may be heavier in proportion to the work they have to perform. Only one reply stated that switch engines were in some cases giving trouble, and this was from a switching association. Frame splices, as a general proposition, give lots of trouble on account of working, and several roads are now using a front-frame section which is welded on to the center of front jaw after the old part with splice has been cut off.

One of the members replying to the question, "Do you have more frames break with inside than with outside valve gear?" gave some very interesting data on a large number of consolidation locomotives, all built about the same time; of 228 with inside or Stephenson gear, 16 per cent gave trouble in one year (November, 1909, to November, 1910), whereas, with the Walschaert gear, 172 passing through shops in same period, 18 per cent of them had to have frames welded, and it is probable that the design was responsible for this condition. A number of roads are using vanadium-steel frames, experimentally, but on account of the short time they have been in service it is not possible to state positively results obtained. One road reports a vanadium-steel frame broken after being in service eighteen months, and another in four months, while another states that two vanadium-steel frames broke in four months. Where power is kept up in absolutely first-class condition and proper care is exercised in regard to frame bracing—pedestal binders or caps kept up, frame bolts and cylinder shoes, wedges and brasses, and machinery in general, so as to avoid excessive pounds—there will be less liability to trouble with frame breakages.

The question of cross bracing has been given considerable thought, and it was found that it was possible, perhaps to have the frame so rigidly braced that trouble would occur, but that where a bracing was used that permitted a small amount of flexibility, it was better for the engine as a whole, and the frames in particular. It is recommended in cross bracing, that ties be fastened full length of pedestal jaw, vertically on rear pedestal, of each driving wheel, or as close an equivalent to this design as governing conditions will permit. The thickness of bosses on cast-steel cross-tie braces is to be not less than 1½, preferably 2, times the diameter of bolt used in fastening. All bolts, where possible, to have heads next to castings, to insure full bearing on bolt.

$$\text{Diameter of bolt at thread} = \text{nearest } \tfrac{1}{8}\text{-in. to } \frac{\text{Width of Frame}}{4}$$

Where size of bolt comes in even sixteenths, the smaller diameter will be used. Body of bolt to be 1-16 in. larger.

As outside gears, with inside cross bracing, have been in use a comparatively shore time, it is a difficult matter to say just what effect the cross bracing has had on frame breakage, but replies received in answer to our question No. 12 would seem to indicate that it is beneficial, and the committee believes it advisable, but it is not yet prepared to say what design is best suited for all classes of power. The four-cylinder, balanced locomotive will be less liable to frame breakage, because of more uniform turning movement than a two-cylinder engine, but there is not sufficient data to confirm this theory. The fact that all these engines are comparatively new makes it difficult to get much information about them.

It is the committee's recommendation that a one-piece frame be used on all engines with piston valves, preferably with cast-steel filling between cylinders and bumpers, but on slide valve engines it is usually necessary to resort to a two-piece frame, because of lack of strength at cylinders. For engines having trailing trucks, a slab, spliced to main frame at rear of back drivers, is generally used, and apparently with satisfactory results. The question of quickly and adequately draining cylinders, so as to overcome undue strains on frames and other parts of machinery, does not appear to have had the consideration it deserves; locomotive designers and builders should consider this matter carefully, particularly on piston-valve engines. The opening of cylinder cocks by hostlers and engineers, and leaving them open until cylinders are properly heated, should be insisted upon.

With cast steel, a design can often be used that would be impossible in wrought iron. Some of the trouble experienced with cast-steel frames has been due to the attempt to make them exactly the same as if of wrought iron, instead of taking advantage of the greater possibilities of designing and making a satisfactory frame where cast steel is used. Some designs of frames, such as those having ribs of different thicknesses, or pedestal fits of increased width, would be almost impossible to make of wrought iron. Very heavy frames over 5 in. in width are extremely difficult to make satisfactorily of hammered iron, and for these reasons cast steel appears to be the only suitable material.

Herewith is a comparison of specifications suggested on page 406, in the 1904 Proceedings, with those issued by the American Society for Testing Materials:

1904.	American Society for Testing Materials.
Tensile strength, 55,000 lbs. min.	60,000 lbs. min.
Elongation in 2 in., 15 per cent.	22 per cent. min.
Reduction in area, not specified.	30 per cent. min.
All frames to be annealed.....	All steel casting to be annealed, unless otherwise specified.
Bending test, none specified.....	A piece 1 by 11½ in., bent cold around a bar 1-in. diameter to 120 deg.
Size of test piece, none specified.	Specifically mentioned.
Test Coupon, none specified.....	To be attached to each frame for test purposes.

The committee suggests that, wherever possible, the specifications recommended by the American Society for Testing Materials be used, as a casting better suited to the requirements will be furnished. As an additional safeguard, it would be better to specify how frame castings should be annealed, and the following is recommended:

Steel-frame castings to be annealed must be heated uniformly to 850 deg. C. (1,500 deg. F.). The heat must be applied slowly, so that all castings in all parts of the furnace are approximately the same temperature. As soon as the castings have reached the required temperature the furnace may be opened.

It has been the observation of a prominent superintendent of motive power that on road engines going ahead, practically all of the time, the right frame breaks more frequently on the right-lead engine, and on left-lead engine the left frame is more susceptible to breakage.

The following approximates rules will produce sections for bar frames either in wrought iron or cast-steel, suitable for modern locomotives:

T=Piston thrust (area of cylinder multiplied by boiler pressure).
A=Square inches of sectional area of frame, top of pedestals.

B=Square inches of sectional area of frame, top rail between pedestals.
C=Square inches of sectional area of frame, lower rail between pedestals.
D=Square inches of sectional area of frame, integral single rail at back cylinder-keying lug.

The width of frames is usually made in proportion to the weight and power of the engine. Frames of 6 in. are not uncommonly used for very heavy engines.

Most of the important bolts in a frame are vertical. Therefore it is often advisable to increase the width rather than make up the section entirely in depth, because the section is not cut away so much when large bolts are used, and for that reason, where 1⅜ or 1½ in. bolts are used, frames of greater width can be more economically employed than the narrower sections.

Frame breakages do not usually occur for some time after the locomotives are placed in service, and in a general way it may be stated that many breakages do not occur until the engines have been in service for at least two years. Probably three or four years is the time when the greater number of fractures commence to occur, and from that time on in increasing numbers.

Plate Frames.

A more or less vague impression appears to exist in this country that plate frames are freer from breakage than bar frames. Plate frames are more readily repaired than bar construction, with the possible exception of thermit welds, because a plate on one or both sides can be bolted or riveted which will usually satisfactorily reinforce the broken section. On account of their relatively thin sections, plate frames in some instances are also repaired by means of oxy-acetylene blow-pipe welds. The general tendency in the design of railway rolling-stock is toward simplicity and the elimination of bolted parts, making or casting pieces together and working away as much as possible from built-up construction. Compared with the bar frame, which is used exclusively in the United States at present, plate frames are essentially a built-up construction, and in the erecting of an engine using such frames the alignment is much more difficult, involving more care and time, so that the erection of an engine is a longer process than when bar frames are used. This and other causes render plate-frame construction undesirable, as a possible substitute for bar frames.

Furthermore, it is a fact that the one-piece integral-bar frame construction, when made of suitable material, is as free, if not freer, from defects or breakages than plate frames. From personal observation of a great many locomotives in the principal European countries and from reports obtained from railway men abroad, the facts seem to be that plate frames often break, especially on the older classes of engines, and that unless made exceptionally heavy above the pedestal they may be expected to show partial or complete fractures after a certain period of service.

One English railway reports that the frequency of broken plate frames is almost exactly ten per cent. per year.

It may be interesting to give extracts from an article written by Mr. I. Valenziani, of the Italian State Railways, published in *l'Ingegneria Ferroviaria*, for November 1, 1910, which has a bearing on the subject. He says:

"Many European railways have purchased American locomotives, and among the details which were largely appreciated in Europe must be included the bar frames, which have two great advantages over the plate frames; namely, the very much greater ease of examination and adjustment of parts lying between the frames, and the greater ease and rapidity with which the various parts can be attached to the frames during the construction of the locomotives.

"In Europe bar frames are rather more expensive than plate frames to construct and an extension of their use is attributable rather to this than to any technical reason."

As an interesting addition to the data contained in this paper, we herewith submit extracts from a report that was made by a representative of a locomotive company, who had been specially detailed to look into the subject of frame failure, but as a committee we do not agree with all his deductions.

"The number of frame failures which occur in the operation of locomotives in service is the cause of very serious delays, and represents at least twenty per cent. of the expenditures necessary to keep an engine in service.

"A comparison of the types of locomotives in service, which were built prior to the past three or four years, shows that the bracing of the frames has not been carried out as we now believe to be necessary for good service. In an effort to overcome the number of failures, the sections of frames have been made heavier and splices increased in section and bolting power, but with several exceptions the bracing of frames seems to have received less attention than it deserves. Experience shows that many engines with increased frame sections fail almost as much as they did with the lighter frames.

"The first conclusion is that a good design of bracing is more important than heavy frame sections. Another factor is the condition in which the engine is maintained, as shown by several of the detail reports by roads having engines of exactly the same design on different divisions, some of which give little or no trouble, while other divisions report trouble constantly.

"An investigation carried out on one road several years ago proved that the frame at first pedestal vibrated 1-16 in., both vertically and horizontally, and that in rounding a curve the bottom of the frame was deflected more than the top, which is the natural conclusion when we consider that the frames are usually braced only to the guide yoke, and knees at the top rail, and a light wrought-iron brace at the bottom rail. It is this twisting action on the frame which causes so many failures in the front leg of the first pedestal, and in the lower rails of the splice connections in consolidation engines, where the distance from the cylinder saddle to the pedestal is short. It seems to make no difference how heavy the frame rails are made, because if no other changes are made the frame will break just the same."

The report is signed by:—H. T. Bentley (C. & N. W.), chairman; F. J. Cole (A. L. Co.), L. H. Fry (Balwin Loco. Wks.), G. S. Edmonds (D. & H.) and E. D. Bronner (M. C.)

THURSDAY, JUNE 15, 1911.

Main and Side Rods.

The committee submitted a progress report, coupled with the request that every member of the association send the committee criticisms or suggestions for modifications before February 1, 1912. The first part of the subject assigned to the committee relates to the kind of material in rods. There is very little difference in the steel for rods, and open-hearth steel having an ultimate tensile strength of 80,000 lbs. per sq. in., is used by all railways. There is some variation in the chemistry. Special allow and heat-treated steels have been considered and put in service, but, to date, information relating to such steels in rods is too meager to justify recommending their use. The second part of the subject relates to specifying formulae for checking up sizes and designs of main and side rods.

Main Rods.

The rod bodies are subject to the following strains:

1. Tension and compression, due to piston pressure and inertia of the reciprocating weights.
2. Bending, caused by centrifugal force acting vertically.

Stresses from compression are always more than from tension. Reciprocating parts are made as light as possible, and stresses due to inertia of reciprocating weights are usually less than those created by cylinder pressure. Furthermore, when drifting, the amount of retardation, due to vacuum and compression in the cylinder, will, to some extent, balance the inertia strains. If for passenger and high-speed freight locomotives, the maximum piston pressure is less than the product of the reciprocating weights by four times the crank length in inches ($P > 4rW$) the latter value ($4rW$) should be used in place of maximum piston pressure. For slow freight and shifting engines, such substitution is not necessary. From the above it will be noted that the calculations may be confined to a consideration of the rod body as a strut, with the load equal to the piston pressure, or its substitute, and as a beam subject to bending on account of whip action at high speeds.

Side Rods.

The rod bodies are subject, first, to tension or compression arising either from a part of the piston pressure transferred through the main crank pin, or from a requirement for the rod to slide one or more of the driving wheels, and, second, to bending caused by centrifugal force acting vertically. When all drivers are not of exactly the same diameter, and when the locomotive is passing over curves, the side rods must slide drivers. The limit of the force to slide drivers is governed by the coefficient of friction between wheels and rails. The commonly accepted coefficient of friction, when calculating tractive power, is .25, or less. For our purpose it should be somewhat higher, to be on the safe side. A number of builders and roads use the coefficient .3, which fully meets the requirements.

For starting, we assume that each rod must be capable of sliding the pairs of drivers to which it imparts rotation, but when running at speed it must slide the drivers on one side only. Therefore, the value P in Professor Lanza's formula would be:

$$P = \frac{WR}{r} \text{ for starting}$$

$$P = \frac{WR}{2r} \text{ for running at speed, in which}$$

W = Weight on pairs of drivers receiving rotation from the rod
R = Radius of wheel
r = Radius of crank.

Most roads base calculations of rods on a speed of 336 r. p. m. This is high for some engines, such as Mallet compounds, and low for fast passenger engines, some of which now reach a greater speed, and the tendency is to achieve still greater speed. The use of 375 r. p. m. for fast freight engines and passenger engines, and 420 r.p.m. for fast passenger engines, would be sufficiently high for ordinary locomotives. For Mallet compounds, and other very slow locomotives, a special figure may be taken.

Rods as Struts.

Main rods are almost invariably made tapered, and the section, if fluted, may vary in thickness of flange, height of web, thickness of web, or a combination of two, or all three. The taper is never of such amount that the results are appreciably affected if calculations are based on the section at the center, the same as for rods having a uniform cross-section. Good practice indicates that this center area for all rods should not be less than maximum assumed end load divided by 10,000 lbs. Merriman's Rational Formula for columns (see Kent's Pocket Book) is:

$$C = \frac{B}{1 - \frac{nB}{\pi^2 E} \frac{L^2}{r^2}} \text{ in which}$$

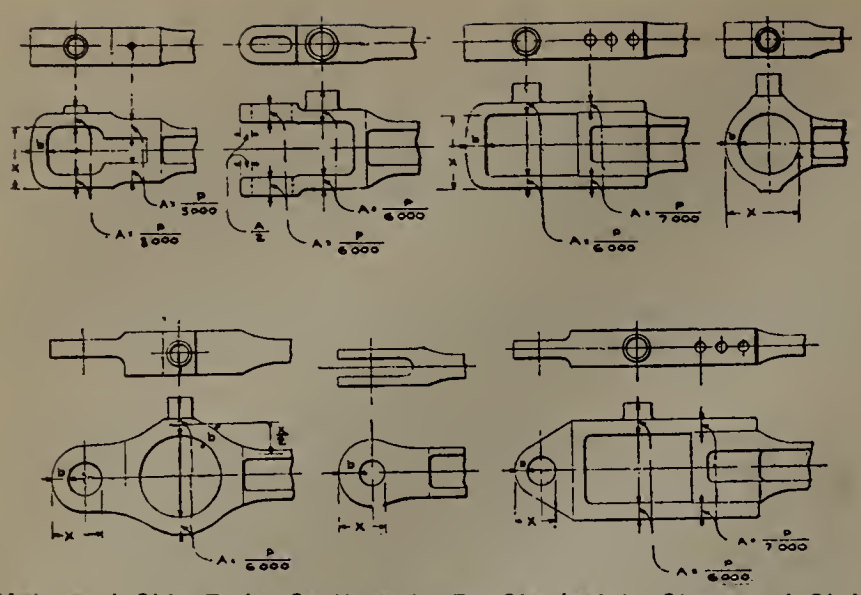

Main and Side Rods—Sections to Be Checked in Strap and Stub End Design.

B = Unit load
C = Maximum compression unit stress
L = Length of column
r = Least radius of gyration.
E = Coefficient of elasticity
n = 1 for both ends, round
n = ¼ for both ends, fixed or flat.

If we have a unit stress of 10,000 lbs. per sq. in. the value of length divided by least radius of gyration (L÷r) must not exceed eighty (80) for neutral axis vertical or parallel with side of rod, and not more than one hundred and sixty (160) for neutral axis horizontal. For these values the maximum compression unit stress is 12,710 lbs. per sq. in., or slightly within the assumed figure for maximum allowable stress of one-sixth of the ultimate tensile strength.

With neutral axis vertical for rods having rectangular section $r = b \sqrt{12}$ ("b" being the depth of section). Substituting this in L÷r=80, we get L=23b. Therefore, if the length from center to center of pin is less than twenty-three (23) times the depth of a rectangular rod, the value L÷r is less than 80. Similarly with neutral axis horizontal $r = a \div \sqrt{12}$ ("a" being width of rod) and the value L÷r is less than one hundred and sixty (160) when L is less than forty-six (46) times the width of section.

Offset Rods.

A number of the rods are offset, that is, the vertical center line of the bearings at the end do not lie in the same plane, or in the plane of the center line of rod body. This creates a bending strain and increases the stress in the rod body. The added stress from this source is equal to the product of the maximum end load and the offset, divided by the section modulus with axis vertical, and requires a correspondingly large section modulus.

Side Rods with Knuckle Joints.

Rods for three and four coupled locomotives must be provided with knuckle joints. The knuckle joints are all necessarily flexible vertically, and some are flexible horizontally also. When the drivers on one side are not in perfect horizontal alignment, slight bending strains occur, in addition to the compression strains. To take these bending strains into consideration would complicate the formulae.

The end pressures on the rods being based on driver weight and a coefficient of friction greater than that expected, the margin in this assumption is sufficient to compensate for the bending strains arising from the non-alignment of the drivers on the one hand, and the deflection of the rod due to centrifugal force, when running at high speed, on the other hand; therefore, both bending strains may be ignored for the purpose of simplifying the final checking formulae. When running at speed the centrifugal force from the short rod connected to the extension of the long rod reduces the bending strains due to centrifugal force in the long rod. As the extension to the long rod is short, this effect may also be ignored as the possible reduction in weight of long rod would not be appreciable.

When the drivers, due to wear between hubs and boxes, etc., are not in vertical alignment, bending strains are induced. Knuckle joints are at times made flexible transversely, in addition to the vertical flexibility, for the purpose of eliminating the bending strains. For locomotives on which a large amount of side play is allowed to accumulate, this transverse flexibility is of great value to avoid rod failures. When the knuckle joints are flexible in both directions, the value of L÷r, for the short rods, should be one hundred and ten (110), instead of one hundred and sixty (160), as given in rods as struts.

Bending Strains Due to Whipping at High Speed.

For main rods the point of maximum bending strain is always very close to six-tenths of the length from crosshead end. This statement is based on the examination of a large number of rod designs. The section at this point may, therefore, be taken as the governing section. For side rods the point of maximum strain is at the center.

Simplification of Formulae.

As accurate calculations are rather lengthy, and must necessarily be based on conditions representing extremes, simple formulae giving values within a very small per cent of those obtained by the more accurate method are better adapted for the purpose and especially useful for checking. The basis for bending strains at speed is the centrifugal force F.

If G represents the weight, considered in pounds and r represents the crank radius, in inches, then

Centrifugal force ..... =	2Gr	3Gr	4Gr	5Gr	for
Number of revolutions per minute	265	325	375	420	

A cubic inch of steel weighs closely .2833 lbs. Both main and side rods may be considered as having a uniform section, equivalent to the governing section and extending from pin to pin. This assumption is accurate for side rods, but for main rods gives stresses at high speeds possibly one per cent higher than those found by the accurate method.

If A=Governing area of rod, in square inches
and L=Rod length, center to center of pins, in inches,
then G=.2833 AL
and Gr=.2833 ALr
For side rods the bending moment M=.125FL.
For main rods the bending moment M=.064FL.

The formulae for bending moment (M) for main rods and side rods, at the assumed speeds, are noted in the following tabulation:

Revolutions per minute.....	265	325	375	420
"M" for main rods.....	$.036AL^2r$	$.055AL^2r$	$.073AL^2r$	$.091AL^2r$
"M" for side rods.....	$.071AL^2r$	$.106AL^2r$	$.142AL^2r$	$.177AL^2r$

From the above, the stress due to whipping action may be found by means of the well-known formula, M÷SM=Stress, to which the stress due to end strains assumed as maxima, must be added. The sum of these stresses should not exceed one-sixth of the ultimate tensile strength of the steel.

Knuckle Pins.

Data in regard to knuckle pins have not been included, as the rules governing pins for wheels and crosshead should also govern knuckle pins, and if the bearing surface of the knuckle pin is sufficiently large to avoid trouble, the shearing area will be excessive.

Checking Formulae.

All measurements are given in inches and pounds.

A=Area of section considered.
a=Width of section considered.
b=Depth of section considered.
C_1=Max. compression unit stress for transverse bending.
C_2=Max. compression unit stress for vertical bending.
$c=c_1-c_2$=Coefficients.
d=Cylinder diameter.
L=Length of rod from center to center of pins.
M=Bending moment.
P=Max. compression strain acting at end of rod.
p=Max. boiler pressure.
Q=Cylinder pressure=$0.7854\ d^2\ p$.
R=Radius of driving wheels.
r=Radius of crank.
RG=Radius of gyration of section—axis horizontal.
rg=Radius of gyration of section—axis vertical.
S= Stress—and where used in formulae must not exceed one-sixth of ultimate strength of the steel.
s=Amount of horizontal offset in rod.
SM=Section modulus of section considered—axis horizontal.
sm=Section modulus of section considered—axis vertical.
W=Weight on pairs of drivers actuated through rod considered.

Main rod area must not be less than P÷10,00 lbs.

For main rods P=Q.

For side rods $P=\frac{0.3\ WR}{r}$

To determine C_1 and C_2, calculation should be based on a section half way between rod pins.

For transverse bending in rods having knuckle pins flexible transversely

$$C_1 = \frac{\frac{P}{A}}{1 - \frac{PL^2}{675{,}000{,}000\ A\ rg^2}}$$

For all other rods

$$C_1 = \frac{\frac{P}{A}}{1 - \frac{PL^2}{1{,}200{,}000{,}000\ A\ rg^2}}$$

For vertical bending in all rods

$$C_2 = \frac{\frac{P}{A}}{1 - \frac{PL^2}{300{,}000{,}000\ A\ RG^2}}$$

Values for C_1 and C_2 can also be taken from tables in "Kent's Pocket Book" under heading "Merriman's Rational Formula for Columns."

First—

For rods without offset the larger value of C_1 and C_2 should be taken equal to S.

For rods with offset the larger value of $C_1 + \frac{Ps}{sm}$ and C_2 should be taken equal to S.

Second—

$$S = c\frac{AL^2r}{SM} + c, P \left(\frac{1}{A} + \frac{5}{sm}\right)$$

The calculations should be based on a section located at a distance 0.6 L from crosshead pin for main rods, and half way between pins for side rods.

Values of C and C_1.

	Rev. per min.	265	325	375	420
Main rod	C =	0.036	0.055	0.073	0.091
	C_1 =	0.500	0.500	0.400	0.300
Side rod	C =	0.071	0.106	0.142	0.177
	C_1 =	0.500	0.500	0.500	0.500

The coefficients selected should correspond with the highest number of revolutions per minute which the locomotive can make. If this cannot be determined, use

420 R. P. M. for high speed passenger locomotives.
375 R. P. M. for passenger and high speed freight locomotives.
325 R. P. M. for all other locomotives.

Very simple rules for rods, without offset, and having bodies with rectangular section, based on the above theory, follow.

First—

Stress is less than one-sixth of ultimate strength of the steel if L is less than 46a or 23b and if A is more than P divided by one-eighth of ultimate strength of the steel.

Second—

$$S = C_2\frac{L^2r}{b} + C_1\frac{D}{A}$$

Values of C_2 and C_1.

		265	325	375	420
Rev. per min.	C_2 =	0.22	0.33	0.44	0.55
Main rod	C_1 =	0.50	0.50	0.40	0.30
Side rod	C_2 =	0.43	0.54	0.85	1.06
	C_1 =	0.50	0.50	0.50	0.50

The allowable stresses for the various sections of rod ends are given in connection with the diagrams following, except where thickness of section is indicated by the letter b. The figures denote maximum stress allowed under end load P. If the minimum areas of the two members differ, take double the lesser area for A.

The minimum area at points indicated by letter "b" should be

$$\text{For main rods—}A = \frac{PX}{30{,}000\ b}$$

$$\text{For side rods—}A = \frac{PX}{60{,}000\ b}$$

In which X is the average diameter of eye or average spread of jaw members.

There is an appendix containing specifications, formulae and data received from various members of the Association—also one giving the calculation of stresses in the bod yof the main rod by Prof. Gaetano Lanza.

The report is signed by W. F. Kiesel, Jr. (Penn.), chairman; H. Bartlett (B. & M.), G. Lanza (M. I. T.), H. B. Hunt (Am. Loco. Co.), and W. E. Dunham (C. & N. W.).

Discussion on Main and Side Rods.

C. A. Seley (C., R. I. & P.): I think this report is a very valuable addition to the records of the association, and it will assist us in calculating and checking rods, particularly the shortened form, and I feel it will be of great assistance to us for that purpose.

F. F. Gaines (Cent. of Ga.): I think it is extremely valuable to have formulae of this kind worked out by a responsible committee and on record in the proceedings of this association. I have not had time to go over the paper, but one item appeals to me, and that is where the rods are offset and the additional allowance that must be made. That is a very important item. Years ago, on some engines, we were continually breaking rods that had been considerably offset to keep the cylinder spread down, and yet their sections were as large, or even larger in proportion, to engines of equivalent power that had straight rods that were giving us no trouble. It took considerable figuring and feeling around before we finally decided that the offset was at the bottom of the thing. In the next lot of engines we ordered of that type w spread the cylinders wider and got the rods straightened out and with the same section of rod we finally got rid of all trouble of that kind. That has taught us it is an exceedingly important thing, if you have got to offset rods on consolidation locomotives, where it is principally done, that you want to have considerable strength in the rod to compensate for the offset.

George W. Rink (Cent. of N. J.): We have experienced a little trouble with certain side rods due to the fact that we were using too high a working stress in designing them. I believe that formulae of this kind, as given in the report of the committee, are very essential so that we can arrive at standard practices. I found that these rods to which I refer had stresses exceeding 15,000 and 16,000 lbs. per sq. in. and when brought down to 12,000 lbs. they gave excellent service. We have experienced considerable trouble in the breakage of fork end rods, principally on 10-wheel engines, and we do not seem to have been able to get over this difficulty as yet. We have got around the repair part of it, by simply welding another portion of the work, that is, one of the half portions of the fork, by means of thermit welding, and it makes an excellent job.

One of the important features in connecting rods of that type is to look after the knuckle pins and see that they are always kept up properly. We have found it necessary to apply single nuts and allow the pin to project beyond the nut about ⅛-in. and then rivet the pin there. We also have a washer about ⅛-in. thick between the side of the rod and the under side of the nut, and we find that also helps to keep that particular connection up in good shape.

M. C. Hayes (Erie): As a usual practice the web section, the web portion of the I-section rod, is made of the same thickness throughout the length. A number of rods broke just about at the end of the web, where the fluted portion begins. I was told some time ago of an improvement being made by tapering the web portion near the end rather than making the web the same thickness throughout. I would like to ask if any one here has actually put that in practice, and if they have found that section overcomes that breaking to which I referred.

Mr. Gaines: I know that is in practice, especially on main rods, wher the front end trouble is caused by a harrowing of the metal, and this is overcome by a long tapering rod. I have known of several designs of engines where they started out with ½-in. web at the back end and run the web up as heavy as 1-in. at the front end of the main rod, and it has overcome that trouble.

Mr. Rink: In designing these side rods we increase the weight of metal in the corner of the web, making the rods about 12 to 15 in., so that the web would increase from ⅝ in. to almost 2 in. up close to the butt. We find that that saves the rod considerably.

Wm. Forsyth (Railway Age Gazette): I think it can be safely said that the main rods and side rods on American locomotives are the largest and heaviest, proportioned to cylinder thrust, that are used by any country in the world, and I have wondered what the reason is. Is it due to the use of low fiber stress in the steel, or is it due to a large factor of safety, to allow for defective material? I should think that we have reached the point in steel manufacture where, in buying billets for rods, we could depend on uniform quality, and it would not be necessary to allow for defects in material as part of the factor of safety. Then we have high strength steel, from 80,000 lbs., which should allow an elastic limit of 40,000 lbs., and taking that, for the working stress of 20,000 lbs., I should think that we could get steel which ought to have a practical working stress sufficient to meet the requirements. A gentleman near me says that he finds that 15,000 lbs. is too high. If you cannot use a stress of 15,000 lbs. in high carbon steel for locomotive rods, it must be because there is either an allowance for defective material or very rough work on the part of the engineer.

W. F. Kiesel, Jr. (Penna.): In connection with what Mr. Forsyth has said I think he possibly lost sight of the fact that the stress in rods reverses. For instance, taking a steel of 80,000 lbs. ultimate tensile strength and 40,000 lbs. elastic limit, it would not be proper to use a stress higher than the one specified here, amounting to about 13,000 lbs. per sq. in. I think that is the reason why engineers keep the stresses low. Furthermore, it would be dangerous to life if a side rod should break. There would be apt to be a bad wreck involving the whole train. Hence the stresses ought to be kept rather low, I think. There is one thing that the committee would like to emphasize, namely, the request made that emmbers shall send in criticisms before February 1, 1912.

J. A. McRae (M. C.): It is the practice on some roads to put a fillet on the cranks. I think that is a good scheme, and I do not know that it was mentioned.

H. T. Bentley (C. & N. W.): My own road is similarly situated to many other roads in that we are having a whole lot of breakage with main rods and side rods. In making some etchings of some side rods that broke immediately after being delivered to us by the builders, we found that the material was very poor and our engineer of tests said: "You go to work and get a billet and hammer it up and close the grain, and then you mlil out the best part of it and therefore you reduce the strength of your rod." He has advocated that we go back to the rectangular rod. It seems to me that even with the large factor of safety that is allowed it is not enough when you get poor material. However, we have had steel rods come with engines that have broken and we have had to replace them with iron of our own manufacture of a very much lower tensile strength, and they have given us good service where the I-section steel rods furnishd by the manufacturer did not stand up. I would like to ask if any of the members here have gone from the I-section rod to the rectangular rod for the purpose of getting away from the difficulty that I mentioned.

Mr. Gaines: In answer to Mr. Bentley's inquiry, I am developing a scheme to remedy that difficulty. We have a forging press using a very slow action hydraulic machine, and we are going to endeavor to make it work so that we can run the metal right through and avoid the trouble that Mr. Bentley refers to, if it is a fact that the best part of the metal is now being removed by milling it out. With regard to what Mr. Forsyth had to say relative to low stresses, I would ask if he has considered two stresses: First, take a beam that is a long column. There you have got to consider the stress in connection with that long column. Then, second, that same long column in addition to the loading at the end of the beam on the side rods, calculated at the center, and on the main rod about 0.6 of the crossed end. Those should be taken into consideration, and you will find that the unit stress is not very light, because if you add up the long stress of the long column action and the inertia action, you get stress very much higher.

Wm. Forsyth: In reply to Mr. Gaines, I would say that the forces he mentions must act in other countries as they do here, and foreign engineers must use a higher unit stress to arrive at the small sections that are used almost all over the world in contrast with the heavy sections used in America.

Mr. McRae: In reference to Mr. Bentley's remarks about I-sec-

tion rods, we have discarded those for all low speed engines, like engines engaged in freight service. We smooth-forge them. We do that, too, for another purpose than getting a dense metal. It accomplishes the purpose of not cutting out the good metal that Mr. Bentley referred to. We have got very good results from rectangular forged rods, as compared with I-sections.

The President: The question of forged fluted rods, I might say, is an old one. It was done with the light engines when I went to the Central Vermont, in 1892. A large number of their engines were equipped with fluted rods, forged without any machining other than the bush centers and, if I remember right, they had excellent results with those rods; but whether that would carry out with the heavier type is a question, as the rod is so much heavier and larger that it would make quite heavy forging. Putting rods as near in line as possible is absolutely necessary. We have a lot of engines that the offset is very great, and we find that the offset rods will break.

D. R. MacBain (L. S. & M. S.): We had considerable experience on the New York Central Lines with the various types of rods, fluted and otherwise, and we almost came to the conclusion that for all slow-speed engines the rectangular section is by far the best proposition. In the first place, we were trying to smooth-forge them and leave the outer shell, excepting on the ends where machining must be done, just as it came from under the hammer. The results were very satisfactory.

We used to have a great deal of breakage, especially on the consolidation engine, with the rectangular section, and we started in five or six years ago on the Michigan Central and substituted a rectangular section. That has given no trouble whatever. While I was on the New York Central Lines they were changing from the I-section to the rectangular section, and the results at that time were first-class. We have found that it is beter, where possible, to have the rod straight, and cut out all the offsets that we can. Many breaks have occurred at the offset which we believe would not have occurred if the rod had been straight.

R. Patterson (G. T.): We have had a great deal of experience in forged fluted rods for low power locomotives. We did that altogether in our Stratford shops, but since we adopted the heavy power we went back to fluting the rod by machinery. We had a great deal of trouble with fluted rods breaking and we substituted the rectangular rod. Rods will break, no matter whether rectangular or fluted, if they are not kept up, but not nearly to the same extent as the fluted rod will.

O. C. Cromwell (B. & O.): We have used rectangular rods on consolidated freight engines and the I-section rods on the passenger engines. This practice has developed in recent years since we have increased the wheel base of the locomotive. The larger in-play that we get in the drivers on a consolidated locomotive, I think, contributes toward the failure of the rod. We not only have failure through the eye of the rod where we use the bushing, but we have it in the jaws, and we have trouble in keeping the wrist pins tight. What we want is a rod that will spring laterally as well as vertically—a kind of universal joint. That would keep the in-play between the drivers and the driving box down and would help in increased mileage. Another method would be to give plenty of lateral play in the crank pin. We tried that to some extent and had trouble in keeping the collars on the crank pin. We have in service one locomotive with a universal connected tie rod, and we are looking forward to some result in that direction, but I cannot tell you anything about it at present.

Mr. Wildin: A great deal of the trouble with side rods is due to the slipshod manner in which they are designed. Just prior to my connection with the New Haven they ordered 12 engines from the builders and they were delivered soon after I came. Three of those engines stripped themselves on our limited trains inside of three months. These had the I-section rods. We took those engines out of service and substituted an I-section rod of a proper design, and they have been running now for four years without any trouble whatever. I think it is safe to say that at least nine-tenths of this trouble is due to poor designing and not so much to the material.

C. E. Chambers (C. of N. J.): We commenced annealing all our main rods and side rods that had been in service 5 years or more, and we found that it very much reduced the crystallization effect. I would like to know whether any of the other members here have followed a similar practice?

The President: We anneal all our rods, not only for the purpose of reducing crystallization, but to detect cracks. We think it has helped some and know that we have found cracked rods that we should not have found otherwise.

Mr. Chambers: How often do you do it?

The President: Every time an engine comes into the shop for general repairs, regardless of the age of the engine. Especially a rod that has been painted or has ever been repaired. With a new engine we would not do it.

O. C. Cromwell (B. & O.): We found considerable trouble in keeping the bushing tight on main rods and side rods. Recently we have tapered the middle section of the rod toward the main pin and think it has overcome the trouble. We had nothing to say as to the method of preventing the distortion of the I by buckling at the end of the rod. If you have loose bushings and knuckle pins, it sets up stresses in the rod which you cannot calculate.

Mr. Chambers: My solution for that difficulty is a split brass. Our troubles are much less with the split brass than with the solid bushings.

H. T. Bentley (C. & N. W.): Instead of putting a rod in the fire to find out if there are any cracks in it, we whitewash it. We put on a very heavy coat of whitewash and then let the rod stand for a day or so; if there are any cracks they soon show up.

Angus Sinclair: In European shops when the rods are taken off they are thoroughly wiped, so that any oil starting can be seen readily. The rods are put on trestles, each end of the rod resting on a trestle; it is then struck heavily in the middle with a wooden mallet which starts the oil out of the cracks.

Mr. Kiesel: I do not think there is anything more to say except again to ask the various members of the association to let us hear from them before February 12, after they have had a chance to look the report over more thoroughly and compare it with their own practice, and to advise us especially whether they consider the stresses we allow here as checking stresses are too high.

Piston Rods and Crossheads.

The committee appointed to present formulae for the proper diameter of piston rods and sizes of crossheads has obtained data from a number of the largest railways and from locomotive builders. Several different formulae and designs are in use which give satisfactory results, therefore representative groups of the data obtained are presented instead of recommending only one set of formulae for each part.

Group I.
Piston Rods.

Let
P=area of piston × boiler pressure.
S=fiber stress.
A=least area of piston rod through key-way.
Allowable working fiber stress in tension, 9,500 lbs. per sq. in. for steel.

Then

$$(1)\quad A=\frac{P}{S}$$

Piston rods to have enlarged fit in piston and in crosshead; ends to be approximately ¼ in. greater in diameter than body of rod.

Crosshead Key.

Allowable working fiber stress, 17,000 lbs. per sq. in. for spring steel. The diameter of body of piston rods, based on 9,500 lbs. fiber stress in tension at least area through key-way, with nominal diameter of cylinder and full boiler pressure for simple engines, are shown in the following table. The sizes vary by even ¼ in.

Diameter of Body for Piston Rods, in Inches.

Cylinder Diameter (Inches).	Boiler Pressure (Pounds). 180	190	200	210	220
16	2¾	2¾	3		
16½—17	2¾	3	3		
17½—18	3¼	3¼	3¼	3¼	
18½—19	3¼	3¼	3½	3½	
19½—20	3½	3½	3½	3½	
20½—21	3¾	3¾	3¾	3¾	3¾
21½—22	3¾	3¾	4	4	4
22½ .. —23	4	4	4	4	4
	4	4	4	4	4¼
23½—24	4¼	4¼	4¼	4½	4½
24½—25	4¼	4¼	4½	4½	4½
—25½	4¼	4½	4½	4½	...

The dimensions of piston-rod end for piston rods with body diameter as shown in the above table are given in Fig. 1.

The dimensions of the crosshead end are given in Fig. 2.

Crossheads.

The formulae for figuring crossheads to be used with the above designs of piston rods were not obtained, but drawings of the crossheads were furnished. A standard formulae in terms of the diameter of the rod could not be derived to cover all the sizes. The dimensions of the crosshead hubs for cast-steel crossheads of the alligator type are given in Fig. 3, and will probably answer in lieu of formula.

The limiting bearing pressure for crosshead pins is 4,800 lbs. per sq. in. The bearing area of crosshead shoes, designed to be used with the above, are: Top shoes, 7 in. by 24 in., and bottom shoes, 5½ in. by 24 in., for piston rods 3¼ in., 3½ in. and 3¾ in. diameter; top shoe, 8 in. by 24 in., and bottom shoe, 6 in. by 24 in., for piston rods 4¼ in. and 4½ in. diameter.

Group II.
Piston Rods.

Let
P — pressure per square inch on piston.
D = diameter of cylinder in inches.
d = diameter of piston rod.
l = length of rod between piston-rod center and the center of the crosshead pin.
f = allowable working compressive stress.
r = least radius of gyration of rod.

Then

$$(1)\quad f=P\frac{D^2}{d^2}$$

$$(2)\quad d=D\sqrt{\frac{P}{f}}$$

$$(3)\quad P=\frac{d^2 f}{D^2}$$

Under repeated alternate strains allow the compressive stresses given in the following table. (From Pencoyd experiments.)

$$\frac{l}{r}=\frac{4}{d}$$

20	13,360	70	6,520
30	9,540	80	5,940

(70,000 lbs.) Steel

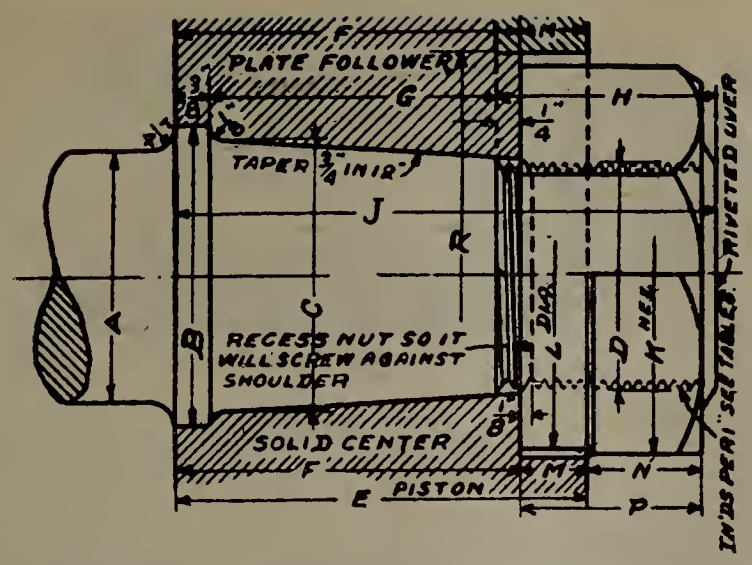

DIMENSIONS FOR PISTON END OF PISTON ROD.

A	B	C	D	E	F	G	H	J	K	L	M	N	P	R	S
2 3/4"	3 1/4"	3"	2 1/2"	4 1/2"	3 3/4"	3 1/8"	2 3/8"	5 7/8"	3 7/8"	3 3/4"	3/4"	1 1/4"	2"	4 3/4"	8
3"	3 1/2"	3 1/4"	2 3/4"	4 1/2"	3 3/4"	3 1/8"	2 3/8"	5 7/8"	4 1/4"	4 1/8"	3/4"	1 1/4"	2"	5 1/4"	8
3 1/4"	3 3/4"	3 1/2"	3"	5 1/2"	4 3/4"	4 1/8"	2 3/8"	6 7/8"	4 5/8"	4 1/2"	3/4"	1 1/4"	2"	5 3/4"	8
3 1/2"	4"	3 3/4"	3 1/4"	5 1/2"	4 1/2"	3 7/8"	2 7/8"	7 1/8"	5"	4 7/8"	1"	1 1/2"	2 1/2"	6"	6
3 1/2"	4"	3 3/4"	3 1/4"	6 1/2"	5 1/2"	4 7/8"	2 7/8"	8 1/8"	5"	4 7/8"	1"	1 1/2"	2 1/2"	6"	6
3 3/4"	4 1/4"	4"	3 1/2"	6 1/2"	5 1/2"	4 7/8"	2 7/8"	8 1/8"	5 3/8"	5 1/4"	1"	1 1/2"	2 1/2"	6 1/2"	6
4"	4 1/2"	4 1/4"	3 3/4"	6 1/2"	5 1/2"	4 7/8"	2 7/8"	8 1/8"	5 3/4"	5 5/8"	1"	1 1/2"	2 1/2"	6 7/8"	6
4"	4 1/2"	4 1/4"	3 3/4"	7"	6"	5 3/8"	2 7/8"	8 5/8"	5 3/4"	5 5/8"	1"	1 1/2"	2 1/2"	6 7/8"	6
4 1/4"	4 3/4"	4 1/2"	4"	7"	6"	5 3/8"	3 3/8"	9 1/8"	6 1/8"	6"	1"	2"	3"	7 1/4"	6
4 1/2"	5"	4 3/4"	4 1/4"	7"	6"	5 3/8"	3 3/8"	9 1/8"	6 1/2"	6 3/8"	1"	2"	3"	7 3/4"	6

Fig. 1—Dimensions for Piston End of Piston Rods.

40	8,380	90	5,300
50	7,760	100	4,680
60	7,120	110	4,220

Crossheads.

The formulae for cast-steel crosshead hubs used in connection with the above piston rods are shown in Fig. 4.

The allowable working fiber stresses are as follows:

Rod at key-way .....12,500 lbs. per sq. in.

Key $= \frac{d}{4}$ bearing value .....40,000 lbs. per sq. in.

Key $= 1.4d$ shear .....13,400 lbs. per sq. in.

Hub diameter $= 1.6d$.....28,000 lbs. per sq. in.

$X = .6d$ shear hub .....12,000 lbs. per sq. in.

$Y = .5d$ shear hub ..... 9,400 lbs. per sq. in.

Group III.

Piston Rods.

The following formulae for piston rods are expressed in terms of the diameter of rod at root of thread on the piston end.

Let

P = area of piston × boiler pressure.

A = area of piston rod at root of thread.

d = minimum diameter of piston rod at root of thread.

S = working fiber stress equals 10,000 lbs. per sq. in.

Then

$$(1)\quad A = \frac{P}{S} = \frac{P}{10{,}000}$$

$$(2)\quad d = \sqrt{\frac{A}{.7854}}$$

The dimension for the piston rod in terms of diameter at root of thread on piston end is shown in Fig. 5.

The center part of crosshead fit is reduced $\frac{1}{32}$-in. diameter so as to insure having bearing at ends of fit only.

Crossheads.

The crossheads used with the above piston rods have following dimensions of hubs:

$\frac{d}{2}$ = distance from end of hub to key-way.

Piston pressure × .00003 = thickness of metal in outer end of crosshead hub for cast steel.

Bearing area in crosshead for crosshead pin = piston pressure divided by 12,000.

The three groups of formulas are presented as representative of the data obtained:

The report is signed by:—J. A. McRae (M. C.), chairman; H. C. May (L. & N.), R. L. Ettenger (Southern) and B. P. Flory (N. Y. O. & W.).

Discussion of Piston Rods and Crossheads.

W. F. Kiesel (Penna.): We allow a stress of 10,000 lbs. per sq. in. for the maximum piston pressure in the small section of the rod which is at the root of the thread in front of the facing. In order to keep the piston on tight we put it on a taper, and the smallest diameter of that taper is ¼ in. larger than the smallest diameter of the thread, so we have ½ in. for wear, although we never turn down a rod more than ¼ in. We find in most cases that the keys are too small, and we have, therefore, adopted a rather large key and the formula is given for the size of the key. Then the stresses in the crosshead body end are not allowed to be lower than the stresses in the body of the rod. If the rod is fitted up well we do not have any trouble. We have had breakages through the crosshead end fit, but these breakages are generally traced to a poor fit or too much lost motion in the crosshead itself.

F. F. Gaines (Cent. of Ga.): I want to thoroughly endorse the end design shown on page 3, in which the fit is made ¼ in. uniformly larger than the diameter of the road. I think it is one of the most important things in the design of piston rods. I know from my own experience that most of the trouble with broken piston rods has been due largely to breaking through the key-way. I attribute that to two things, one the use of insufficient metal where a rod has to fit a shoulder, and the keys are driven home by a sledge. An additional load is thus applied, and nobody knows what is amounts to. The greatest trouble, in my experience, has been with rods breaking just at that point, and where on our older engines we had the rods without the enlarged end, this end has been substituted when it was necessary to renew the rods, and we have entirely eliminated the trouble in this way.

I have a formula which I have been using for a number of years in designing piston rods and will present it for what it is worth. It is an empirical formula in the first place, with a constant derived from checking over a very great number of designs and getting a value for that constant. A piston rod must be treated, more or less, as a long column, and Euler's formula reduces it to the form.

$$d = S\ C \sqrt{D\ L}$$

where d = required rod diameter.

S = steam pressure.

C = A constant depending on nature of material.

D = Diam. of cylinder.

L = unsupported length (From crosshead pin to center of piston head.)

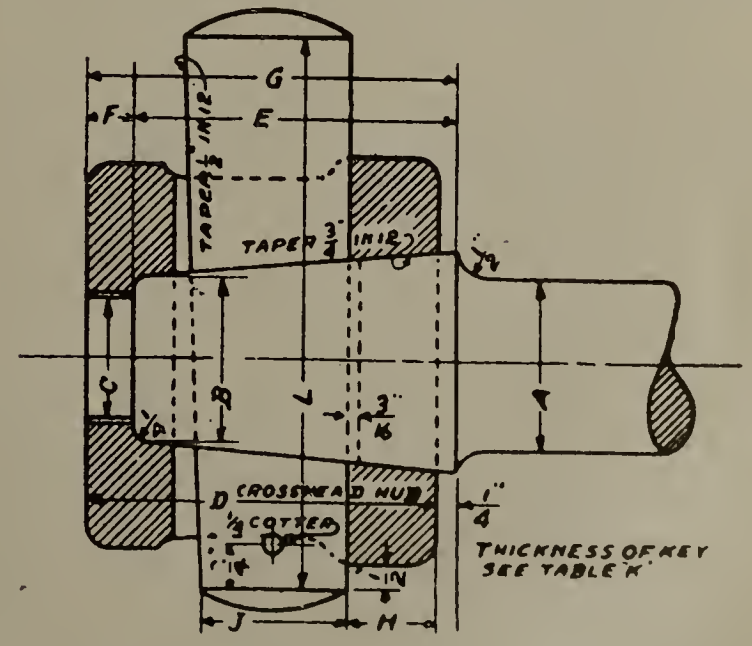

DIMENSIONS FOR CROSSHEAD END OF PISTON ROD

A	B	C	D	E	F	G	H	J	K	L
2 3/4"	2 5/8"	1 15/16"	5 3/4"	5 1/4"	3/4"	6"	1 1/2"	2 3/8"	5/8"	9"
3"	2 7/8"	1 15/16"	5 3/4"	5 1/4"	3/4"	6"	1 1/2"	2 3/8"	5/8"	9"
3 1/4"	3 1/8"	2 7/16"	6 1/2"	6"	3/4"	6 3/4"	1 3/4"	2 5/8"	3/4"	9"
3 1/2"	3 3/8"	2 7/16"	6 1/2"	6"	3/4"	6 3/4"	1 3/4"	2 5/8"	3/4"	9"
3 3/4"	3 5/8"	2 15/16"	7"	6 1/2"	3/4"	7 1/4"	1 3/4"	2"	3/4"	10 1/2"
4"	3 7/8"	2 15/16"	7"	6 1/2"	3/4"	7 1/4"	1 3/4"	3"	7/8"	10 1/2"
4 1/4"	4 1/8"	3 7/16"	7 1/2"	7"	3/4"	7 3/4"	2"	3 1/4"	1"	11 1/2"
4 1/2"	4 3/8"	3 7/16"	7 1/2"	7"	3/4"	7 3/4"	2"	3 1/4"	1"	11 1/2"

Fig. 2—Dimensions for Crosshead End of Piston Rods.

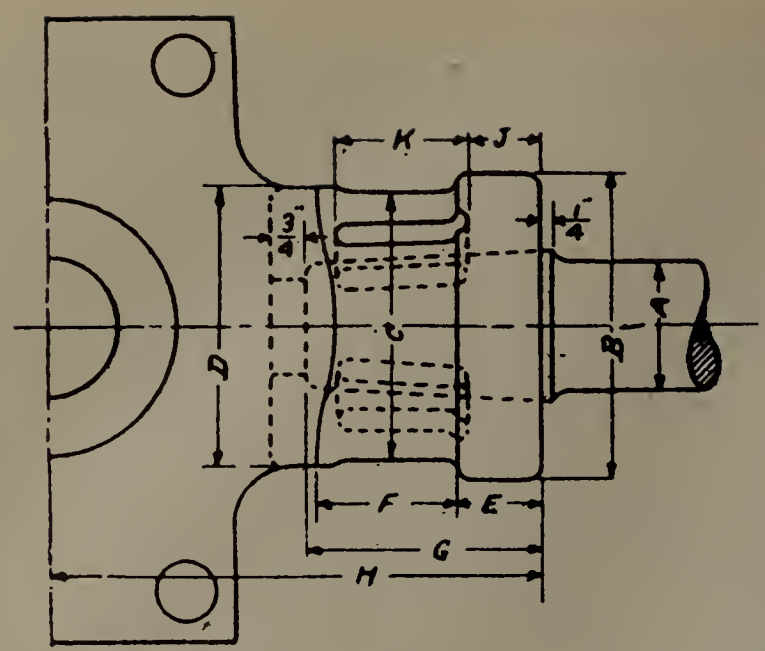

DIA. OF ROD A	B	C	D	E	F	G	H	J	K
$2\frac{3}{4}$" 3"	$6\frac{1}{2}$"	$5\frac{3}{4}$"	6"	$1\frac{3}{4}$"	3"	5"	$10\frac{1}{2}$"	$1\frac{1}{2}$"	$2\frac{13}{16}$"
$3\frac{1}{4}$" $3\frac{1}{2}$"	$7\frac{1}{4}$"	$6\frac{1}{2}$"	7"	2"	$3\frac{1}{4}$"	$5\frac{3}{4}$"	12"	$1\frac{3}{4}$"	$3\frac{1}{8}$"
$3\frac{3}{4}$" 4"	8"	7"	$7\frac{1}{2}$"	2"	$3\frac{3}{4}$"	$6\frac{1}{4}$"	13"	$1\frac{3}{4}$"	$3\frac{1}{2}$"
$4\frac{1}{4}$" $4\frac{1}{2}$"	9"	8"	$8\frac{1}{2}$"	$2\frac{1}{4}$"	$3\frac{3}{4}$"	$6\frac{3}{4}$"	14"	2"	$3\frac{3}{4}$"

Fig. 3—Dimensions of Steel Alligator Crosshead Hubs.

From a large number of analyses of rods that have given long and favorable service without any trouble, the value *C* has been worked to give .0006, and I find, in rechecking this after I received this paper and before coming to the convention, that on some of our most recent engines it checks out very closely, and these engines have given no trouble.

M. D. Franey (L. S. & M. S.): I notice on Fig. 2 that the committee recommends a shoulder at the end of the rod, which butts against the shoulder on the crosshead. I note this same form of design is shown in Fig. 3. It is my experience, in examining the rods that come to the shop after they are in service, that we find a very small percentage of the rods that bear against the shoulder. When the rod is disconnected in the engine house, and the engine is then put in service, there is a certain abrasion that takes place between the two metals. Assuming that the end of the rod is a proper fit on the crosshead, when it is originally fitted, it is fair to assume that the rod is too small when it is returned to the crosshead. I find, where the end of the rod is in contact with the shoulder in the crosshead, there is a working of the rod in the crosshead fit, and the man making repairs in the engine house will remove sufficient metal to insure a space between the end of the rod and the crosshead. Usually there is $\frac{1}{16}$-in. It is my experience that we get better results by removing the shoulder from the crosshead and using the additional bearing space to prevent the working of the end of the rod in the crosshead.

H. T. Bentley (C. & N. W.): I was very glad to hear from Mr. Gaines that he overcame his trouble by putting larger ends on the piston rods and still use the key. We have used the large ended piston rod, but I am sorry to say we have not overcome our difficulty with the piston rod ends breaking, due to the driving of the key. On our last engines we have gone to the nut on the crosshead end, and I would like to ask the gentlemen present which they think is the better proposition. It seems to me you do not know what you are doing when you drive a key in, but when you tighten up a nut you have some idea what is going on.

The point brought up by Mr. Franey about the shoulder on the piston rod, where it butts up against the crosshead, is a good one. I do not believe you can get the fit in both places all the time. You have either got to have a fit in the crosshead, and it will not fit up against the shoulder, or it will fit against the shoulder, and not fit properly in the crosshead. I would like to know whether it is a practical thing to try to have the two fits and maintain these conditions. The fitting of the piston in the crosshead is a very important thing, but unfortunately a good many people do not seem to realize that, and we have had very considerable trouble at both ends, the piston end and the crosshead end, due to improper workmanship, and I believe if more care was given to that work it would probably result in less failures. In the old days they used to grind them in, especially in the crosshead, to be sure they got

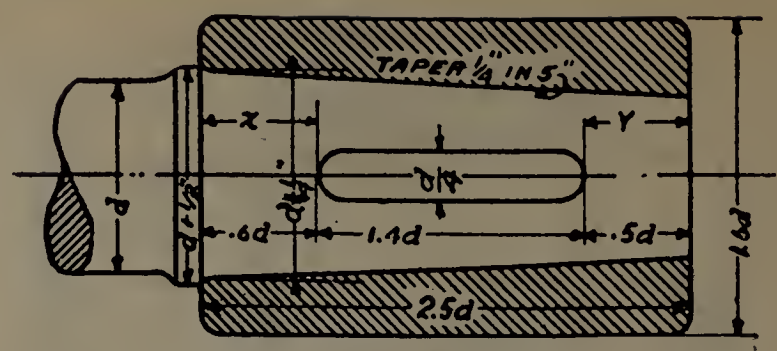

Fig. 4—Crosshead Hub.

an absolute fit, but there is much grinding-in done in these days.

Mr. Gaines: I want to reply to Mr. Bentley's remarks relative to the use of the nuts. I do not think there is any argument on the proposition that the nut is infinitely better. I presume most of you recall the design worked out by Mr. Thomas, of the Southern, several years ago of a crosshead with the use of nuts for securing the piston rod. It is in very general use down through all our part of the country, and I must say, that the causes of any trouble from that kind of piston rod are greatly eliminated by the use of the nut—it is away ahead of the practice which uses the key.

With relation to the remarks regarding the shoulder, I agree that you cannot have two different kinds of fit and make them both fit. I think you must remove the shoulder and depend on the drawing up of the taper fit.

Mr. Franey: Relative to the fit, we have tried the method of grinding and other methods. The most satisfactory method that I have found in any piston rods is to turn the rod to a proper fit to the crosshead, forming the taper in the crosshead with the taper attachment in the lathe. After obtaining a perfect bearing to remove the tool marks with a file. We have tried the grinding, but find even with the most careful workmen we are apt to remove more surface on the larger diameters of the piston rod than we would in the other portion. It would depend entirely on the care given by the individual. I seldom find that a ground piston rod, where it is ground by the use of emery, will give as perfect a bearing or contact between the piston rod and crosshead as the turning and filing method. Relative to keying the piston rod into the crosshead we find that we are obtaining better service by confining this work to one individual, the man in charge of fitting up the pistons; it is his duty to draw the piston home in the crosshead on repaired engines by the aid of a special key, after which he uses the finished key or the key that is to go into service after the piston rod is brought home in the crosshead.

C. A. Seley (C. R. I. & P.): I desire to endorse Mr. Gaines' statement about the use of the Thomas crosshead. I think the use of the key is a barbarism in a way, because you can not tell how much pressure the weight of the sledge will wield, or the weight of the man who will use the sledge will wield, in driving the key in; whereas you can limit the length of the wrench, and to a certain extent the length of the pipe on the wrench, that is used to put on the nut. I think it is a very desirable practice, and I would suggest in the printing of this paper in the proceedings, if it would be agreeable to the committee, that some reference to that should be included in the report.

R. L. Ettenger (Southern): We have on our lines in the South a great many of what are known as the Thomas crossheads, that is, the crossheads with the piston rods held with two nuts, and as far as I know we have comparatively few failures from broken piston rods getting loose from the crossheads, probably due to the short length of the piston rod in the crosshead. The broken rods are practically eliminated by the use of the nuts.

D. R. MacBain (L. S. & M. S.): I would like to ask the convention whether any one has ever made an investigation into the cause of trouble with the fits. We have used all the fits known to the craft at various times, and we started in at the beginning of 1909 on a pretty big railway to keep a record of every cylinder head broken, and rods broken through the key-way, and at the end of the year we made an analysis of the whole thing and found 90 per cent of the breakages occurred on the left hand side of the engines. We then started in to stiffen up the cylinders, put in a cylinder cock tumbling shaft across the front end, so that the left hand cocks were opened if the right hand cocks were open, and we found it largely cut out the trouble.

George W. Rink (C. of N. J.): Our practice regarding the piston fit referred to on page 3 is to make the diameter C the same as the diameter A. We never have any trouble with that style of a fit. Regarding the crosshead end, we establish that same rule, and followed the practice for about 10 years, making the diameter of the enlarged end on the crosshead end the same as the diameter

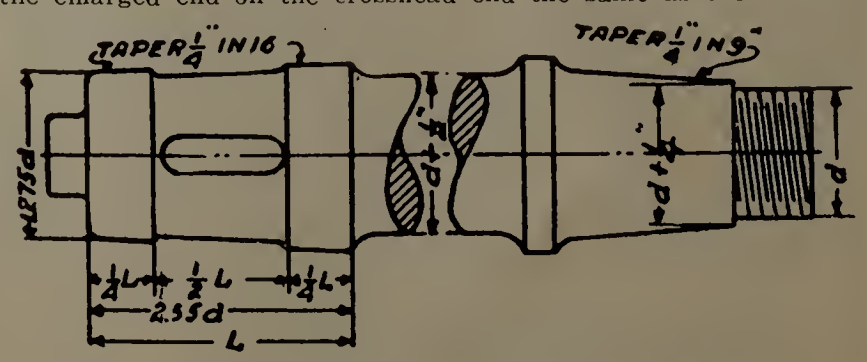

Fig. 5—Piston End of Piston Rod.

of the rod. In looking into the matter recently we found that we removed hundreds of rods on account of the cracking between the key-way and the large end of the taper fit. The cracks did not extend all the way through, they simply extending in about $\frac{1}{16}$ or ¼ in., so that our practice now, and has been for the last three months, is to make the enlarged end of the rod ¼ in. larger in diameter than the rod proper.

Another thing, I note, referring to the Fig. 2, that the committee calls for a taper of ¾ in. in 12. Our practice is a taper of ½ in. in 12. We use nearly that same method of fit, but we have now cut off the extension marked C, as we find there is not much value to it. The only cause to which I can ascribe the crack of the large end of the fit is simply that the rod fit is perfect from the small end up to about two-thirds of the way, and then there is a slight motion which causes these cracks to generate. The average life of a large number of our rods is only two years and a half. The rod proper is all right, but they have to be removed on account of these small check cracks. I might also mention that we have provided clearances between the end rod fit and the crosshead. We simply insist on the one fit, and that is only the taper portion.

John A. Pilcher (N. & W.): I will simply state in connection with the rod, that it has been our practice to follow the methods described by Mr. Rink, as to the large ends, where it comes in contact with the crosshead lug. We have the same diameter of rod that he described. We do not have any epidemic of broken rods. Of course, there is an occasional rod broken, but no great number. We use almost exclusively the key on account of the reduction in length.

O. C. Cromwell (B. & O.): We use the practice pretty largely as outlined in the paper. Formerly on our older locomotives we did not enlarge the crosshead fit, but since we entered upon the practice of doing that it has helped matters very considerably. We find that a little matter of detail is a further step toward improvement, and that is to round the top edge of the key-way and immediately remove the sharp saw-tooth edge, which is the beginning of the crack, file it off with a file to about ⅛ in. or $\frac{3}{16}$ in. radius, and it prevents the beginning of a crack.

I do not believe we will ever prevent the breakage of piston rods, when we use a key, if we use the rod long enough. The point should be that we should avoid disconnecting the piston rod from the crosshead, making the rod sufficiently long, so that when you want to renew the packing rings you can disconnect the front end of the main rod and shove the crosshead up against the stuffing box and expose the piston rod and renew the ring. My point is to take away the necessity for removing the key and replacing them. We can keep on with sufficient keying to break the rod. That is the direction in which we are working.

Mr. Gaines: I found in many of the older and lighter type engines the guides were so light there undoubtedly a great deal of broken piston rod trouble caused by the springing of the guide allowing flexure. Where the rods were made heavier, in engines which had previously given trouble from that source, we found that the difficulty was entirely overcome.

Mr. McRae: In regard to the cracks in the piston rods, between the face of the crosshead hub and the key-way on the rods, I have seen that thing in piston rods with ends enlarged ¼ in.; therefore it would not seem to be due to the size of the rod.

Repair Equipment for Engine Houses.

The committee realized that no one solution would fit all conditions in the equipment of engine houses and that each house would require a special study, but at the same time there are a few general principles which should be kept in mind. It recommends that the word "roundhouse," which was undoubtedly descriptive a number of years ago, should be replaced, for the sake of accuracy, by the words "engine house."

The capital invested in a locomotive represents a certain total of earning capacity, and the sooner this total earning capacity is realized the greater will be the yearly returns on the capital invested. If it is a sound business proposition to wear out locomotives in service in as short a time as this can be done legitimately and to keep them as near one hundred per cent efficiency as possible, these principles should be kept in mind in determining the extent to which repairs should be made at engine houses, and this policy, once settled, in turn largely determines the repair equipment needed.

In order to obtain an approximate estimate of the net daily earnings of a freight locomotive, the gross freight earnings of a trunk line for the year 1910 were divided by 365 and again by the total number of freight engines owned, plus nine-tenths of the switch engines owned. The operating ratio for freight service was assumed to be 60 per cent, leaving 40 per cent net operating income. The result was that $45 was found to be the approximate daily net operating income from each locomotive engaged in freight service. This computation assumes each freight locomotive was in service every day. This means that $900 capital at 5 per cent could afford to be invested in engine-house repair equipment for each extra day in service that could be obtained for each freight engine, by making the repairs at the engine house instead of the main shop. Expressed more concretely, it means that, if the engine-house repair equipment kept each of 100 freight engines in service two extra days a year, the extra net operating income would be 5 per cent on a capital of $180,000. This does not necessarily mean an increased net operating income as it may and in the end probably would mean a smaller capital invested in freight locomotives.

While the fixed charges at main repair shops do not appear in reports showing the cost of locomotive repairs, it is evident they enter into costs and should therefore not be ignored. With a view to determining approximately the importance of this item, the figures for a shop at which no car repairs are made, repairing about 600 engines during 1910, have been taken. The average cost of repairs per engine, including labor and material, was found to be about $1,200, so there must have been a considerable proportion of the engines which received only medium and light repairs. This plant, including land, buildings, machinery and tracks has a book value of about $1,000,000. Assuming that 10 per cent of this value represents the fixed charges, these amount to $100,000 a year, or slightly less than $170 per year per engine receiving repairs at that point. It is interesting to note that the fixed charges amount to between 15 and 20 per cent of the total amount charged at this shop to engine repairs for 1910. The cost of fixed charges for another shop, at which, with the exception of some miscellaneous work, only locomotives are repaired, amount to $234.94 per year for each engine repaired, and are 13.2 per cent of the total value of the plant.

In all probability it will be conceded it would be a waste of time and money to run a locomotive to the main shop to have a driving-box cellar repacked or the flues cleaned. Why? Because it would involve time lost from revenue service getting the engine to, through and from the shop, reducing the yearly earnings of the engine; necessitate the use of main shop space, increasing the capital invested in shops, or reducing the main shop output; congest the shop-track movements and disarrange the shop routine, thus delaying other more important shop work. At the main shop, though the item does not appear in the statistics showing the cost of repairs, there are the shop fixed charges, including interest on the investment, repairs, taxes and insurance, a no inconsiderable item. At the engine house, the fixed charges would be very much less, as they would not include those of the engine house proper, the tracks, turntables, ash pits, coal chutes and other facilities necessarily provided, and would cover only the comparatively small investment in the shop building and machinery provided for repair work.

With tools and men under their immediate control and being responsible for results, engine-house men will, in all probability, keep the motive power in better condition, more efficient and less liable to breakdown, and take a greater pride in making repairs quickly than when repairs must be made by the independent organization of the repair shop. It is common experience that the qualifications of engine-house employees should be quite different from those of repair-shop men. The work of the repair-shop man is steady and should be accurate, thorough and first-class in every respect, with the aim that a locomotive shall remain out of the repair shop as long as possible, and there is no pressing necessity that this job be finished by a certain minute. In contrast to this, the work of the engine-house man is spasmodic; at certain hours he is extremely busy, working under high pressure, and again has little to do. His chief care is to have the engines ready for their next run and in such condition that they will make at least a round trip successfully.

When repairs, other than general, are made at the main shop, more work is usually done than is necessary. The shop man's experience is not such as to educate his judgment as to what work he can with safety let go. Whatever the cause, there can be little doubt as to the fact. To those lacking the experience, it no doubt seems that this practice could be stopped by the issue of proper instructions and supervision, but proper instructions do not change human nature or life-long habits, nor does a reasonable amount of supervision seem to work the miracle.

It is commonly the case at engine houses that tools are frequently missing or inefficient for lack of repair, resulting in considerable useless expense not only for tools, but in time lost in hunting them and exasperating delays in making repairs. The committee believes the remedy for this is a toolroom, with some one in charge whose duties should include not only the issuing of tools on checks, but keeping the tools in good condition and a proper supply on hand. If a locomotive must lay in the engine house a day for lack of the material necessary to repair it, there follows a loss of earning power which, if expressed in dollars, would pay a good interest on a considerable investment in storeroom stock. There should be kept at all important engine houses an ample supply of material and spare parts, such as air pumps, lubricators, injectors and bell ringers, which should be used to replace defective apparatus whenever it will take less time to exchange than to repair. As a general proposition important repairs to such accessories can be made to the best advantage at the main shops, where special tools and specialists are available. It seems evident that the interest on the investment in spare parts must be less than the loss in earnings resulting from not having them.

To get and keep a desirable class of men, engine-house conditions should be made as attractive and convenient for them as possible, including good ventilation and heat, lockers, toilet and washroom accommodations kept in first-class condition. It seems particularly important to have a system of ventilation which will quickly and thoroughly carry off the steam and smoke, which are necessary in an engine house, that work may be done more rapidly and efficiently than would otherwise be the case. It is not an unusual policy in equipping important engine houses to use worn-out and obsolete tools. This is short-sighted, not only because a big shop is better able to find profitable use for such tools and better able to keep them in repair, but engine-house conditions warrant the best of tools. If a tool is not efficient enough to meet the requirements of repair-shop work it will generally pay to scrap it.

When studying the requirements of roundhouses, determining the kind of work to prepare for and the repair equipment needed, the following points should be kept in mind: Locomotives should be held out of service for repairs as short a time as possible; they should be kept as near 100 per cent efficiency as possible; the

effect of earnings of time saved by repairs made at engine houses; the effect on engine efficiency of repairs made at engine houses; the smaller fixed charges for repairs made at the engine houses, as compared with those at the main shop; the effect of storeroom stocks on engine earnings; engine-house men should have ideals and methods quite different from those of shop men; and it is important that engine-house conditions and facilities should be attractive and convenient to get and keep good men and increase their efficiency.

These conclusions can be generalized in the statement that locomotive repairs and repair facilities at engine houses are warranted when they will result in increased earnings either because of more or better engine service obtained from a given number of locomotives.

Engine houses may conveniently be classified under three heads: Those at minor division terminals, or the outlying ends of branch lines, where only very light repairs are made; those at important division terminals, and not in connection with important repair shops, and those in connection with repair shops. At outlying engine houses we assume there would be no power-driven machines and suggest the following list of tools, the number and sizes to be determined by local requirements:

Twist drills.
Drill sockets.
Taps—including machinists', steamchest, pipe, wash-out, straight and taper, stay bolt.
Dies to correspond.
Pipe stock and dies.
Hacksaws.
Straight edge.
Flue tools—caulking, rolls, expanders, bending.
Pipe cutters.
Jacks, sledges, drifts, crowbars, saws, brace and bits.
Twist drills, extra long.
Drill chucks.
Ratchets and braces.
Surfacer plates.
Tinners' bench shears.
Reamers, rod and taper.
Wrenches, socket, crowfoot, hexagon.

As local conditions vary and as conditions should largely determine facilities, it follows that the committee's recommendations can be only general. With this understanding, the following suggestions are submitted. In general, an engine house should be equipped with driving and truck wheel drop pits and tools to take care of all necessary rod work, driving-boxes, ordinary valve-gear work and the replacing of flues needed between general overhaulings. The list of tools suggested for outlying engine houses, to be expanded to meet the requirements of a larger terminal by the following:

Ample storeroom stock.
Drop pit for driving-wheels.
Double blacksmith forge, face plate and tools.
72-inch boring mill.
Driving-wheel lathe.
38-inch tire turning-lathe.
Planer.
Slotter.
Sensitive drill.
Bolt cutter.
50-ton hydraulic press.
Power-driven valve-setting machine.
Air hammers.
Hot-water washout facilities.
Drop pit for engine truck and tender wheels.
Portable blacksmith forges.
36-inch boring mill.
24-inch lathe.
16-inch lathe.
Shaper.
36-inch vertical drill.
Emery grinder.
Pipe-bending machine.
Punch and shear.
Air compressor.
Air motors.

For engine houses in connection with repair shops, the committee has not been able to agree. Several of the members feel that it is economical to depend on the main shop for considerable machine work. On the other hand, the other members believe that except for tire turning, the equipment should be practically the same as for an independent engine house, because of the saving of time and cost of repairs and the different training of engine-house and shop men.

The report is signed by:—C. H. Quereau (N. Y. C. & H. R.), chairman; W H. Fetner (Cent. of Ga.), H. P. Meredith (Penn.), A. G. Trumbull (Erie) and J. A. Carney (C. B. & Q.).

Discussion of Repairs Equipment.

G. W. Wildin (N. Y. N. H. & H.): I ask the committee if they really mean that: "It seems axiomatic that locomotives should be worn out in legitimate service, as soon as possible." It has always been my idea that you should make them last as long as possible in legitimate service. I do not believe the committee means what it says. It is our aim to make them last as long as possible. You can always wear them out.

H. S. Hayward (Penna.): I think the committee is perfectly justified in that statement. In my opinion, too many engines are kept in service after they become obsolete for the demands of a modern railway. They should be worn out during the period of usefulness of that type of engine. The demands of our service are constantly increasing—we are getting larger engines—and I expect that nearly all of us find that we have a number of engines on hand that are not of a character suitable to our roads. Many roads have had engines in use for 15 or 20 years, and they are still using them at a disadvantage, compared with engines of modern type, suited for the service in which these old engines are employed.

H. T. Bentley (C. & N. W.): I think the New Haven is in the same box as many of the other roads. We had a mania for scrapping engines some time ago, but now we put new boilers on the engines that we thought we ought to have scrapped several years ago, and we keep them in service. Many roads have gone too far in scrapping their small engines. In some cases they are running a 10-car engine on a 2-car train, and that is not economy.

F. F. Gaines (C. of Ga.): I thoroughly believe in the necessity of having such facilities at roundhouses and terminals that you can do all the necessary running repairs thoroughly and quickly. I believe in having such conditions at your roundhouses that men can work under them—that is, in the winter time you should have your rooms sufficiently heated and ventilated, and there should be other sanitary facilities provided for the comfort of the men. These are things ordinarily overlooked in a roundhouse. I have found from experience if you provide a good modern roundhouse, well heated and ventilated, that the improvement in your output and the class of work performed is marvelous. I do not think any roundhouse of any size can exist and perform its proper functions without a tool room, and a man in charge of the room both day and night. In most of the roundhouses the men do not have access to the storeroom of the company for small supplies, and it is necessary to keep small supplies in this tool room, where they are available day and night.

The roundhouse in a large terminal should be separated entirely from the back shop, with all the necessary equipment in the roundhouse required to take care of the ordinary running repairs, without having to depend on the back shop. I differ with the report in one respect that at outlying points they do not recommend any tool equipment. I think, of course, this is a matter which depends on the surrounding circumstances, but nowadays when electric power is available in many of our smaller outlying points, through the city lighting system, I think wherever it is possible we ought by all means have a drill press and lathe and a few other tools, a dry grinder if it is possible to obtain the necessary power; and if it is not possible to do this, it is advisable to install a small gasoline engine to give temporary power for emergency uses in making repairs.

C. E. Chambers (C. of N. J.): I thoroughly agree with the committee on points of equipment of the engine houses and I wish to say that I have found it one of the best aids for proper back shop work. I think that when an engine is turned out in the back shop proper attention must be given to the possibility of very heavy repairs in the engine house. There are many things while an engine is stripped down in the back shop that can be done for about one-quarter of the expense that they could be done for three or four or five months afterwards. It is true that you must have the necessary lathes and good drop pit facilities. I have found different places throughout the country where engine houses were trying to be operated without drop pits where they had trouble. It simply encourages an engineer to run an engine with a box pounding here or there, when if they had a good drop pit the trouble would have been discovered and remedied at once.

J. F. DeVoy (C. M. & St. P.): I agree with the committee that a roundhouse man should be a specialist. In my opinion, the back shop is the proper place to manufacture. The men in the roundhouse should b equipped with tools which will permit them to get an engine in shape quicker than in any other place. If the proper thought be given we will get back, say 25 per cent of our engines to the old eight wheel type, for the reason that the average eight wheel type or American type of locomotive, pulling, say up to a six car train, will cost on an average from 2 to 4 cents per mile for its maintenance. If one of a larger type, say three times as large, is put on that service it is an absolute impossibility to maintain it for less than 7 or 8 cents a mile. The fact that an engine 10 years old is no good is the furtherest away from helping the treasurer to be on the right side of the fence of anything that I can imagine. There is not any question but what the money of the mechanical department on a railway is spent about two-thirds of it in round house work and the other third in back shop work. So that I can see no more important paper that could take our attention than this. In the past three months it has been a problem in order to make both ends meet as to how quickly we could get an engine laying on a side track waiting for repairs into service, and I think that everybody should discuss this paper; especially along the line of the 10 car and the 2 car proposition.

A. E. Manchester (C. M. & S. P.): I agree with that portion of the committee's report that speaks of engines being kept in service. One of the things that I discovered in connection with engine house service is that there is too great an amount of dead time between the time the engine is cut loose from the train or leaves the round house and is attached to the train and the time it is in the round house undergoing repairs or in a position to have attention given to it. The best equipment that can be applied in the average round house is that of coaling facilities, water facilities, clinker pits. Clinker pits generally I think is the keynote of the whole situation and when you do get your engine into the roundhouse there should be a great many devices for quick and ready repairs. Drop pits are absolutely essential and I believe they are generally the practice in modern round houses. In many sections of the country boiler washing is a most important feature in a round house, and everything that goes to the quick handling of boiler washing and speedily getting a boiler back in shape and ready to return to service adds greatly to the time saved and the advantages gained by the engine being in the round house. I do not believe there is any economy that will ever come by restricting a round house in such tools and facilities as are necessary for the quick handling of parts. The great trouble in many round houses is that they try to make them repair shops as well as round houses, which I think should be stopped. The building up work should all be done at the shops. A round house should have to do with the putting together of things that can be readily dismantled and the getting of them back into service.

J. F. Enright (D. & R. G.): I agree heartily with the committee in the statement that a round house should be provided with certain tools to expedite the handling of running repairs. My idea is that all renewing of parts should be done in the main shop, and I think that the running repairs can be taken care of in the round house very easily as the committee has recommended.

M. J. McCarthy (C. C. C. & St. L.): I agree with the last speaker that sufficient tools should be kept in the round house

to handle engines with as little delay as possible. In fact, I quite agree that the system of doing such work as dropping a wheel, and the handling of rods, work that will cost perhaps $150 or $200 or even as high as $300, might be done in the round house.

H. C. Oviatt (N. Y. H. & H.): There has been such a marked contrast on the division with which I have been connected for several years that I cannot refrain from endorsing what I consider the most able paper that I have ever heard on the floor of this convention, I was connected with a division on the New Haven road that had no means of maintaining power at round houses up to a year and a half ago. Then one of the most modern round houses was erected and equipped with sufficient tools to properly care for the engines that had been in service say 10 or 12 months. I heartily agree with the committee that when engines are turned out of the back shop they should be put in a first-class condition. I also believe that at the end of 8 or 10 months, with a round house properly equipped, the engine should be held for a time not to exceed the time it would have to wait to get into the back shop for repairs, and the proper repairs made that will extend the life of that engine from 6 to 8 months. I think this is what the committee had reference to when they said an engine should be worn out as quickly as possible—meaning to keep away from the back shop as long as possible and to keep in service as much as possible, thereby tending as nearly as possible to 100 per cent efficiency.

I am especially not to be misunderstood in regard to the cost of the power. I did not mean to be understood as stating that power could be maintained in the roundhouse. It was my idea that we could avoid a great many repairs that were necessary to do by keeping the engine out of the back shop, as well as taking the place of an engine that needed general repairs. By doing this work in the roundhouse it would help out the big repairs and keep the engine in better condition than by allowing everything to go to the round house.

R. D. Smith (B. & A.): I believe that 60 per cent of the maintenance of the locomotive should be expended in the engine house to insure the best road service, and 40 per cent. in the shop. We have arranged our coaling plant in such a way that an engine may get coal outbound as well as inbound, which facilitates cleaning flues and making repairs. The clinker pits are so arranged that the ash pan can be cleaned and the grates examined, and such work may be done outbound as well as inbound. We have found that in handling many engines a good drop pit section is necessary at some of our terminals. We have our drop pit sections made from 100 to 112 feet long. I think that this is perhaps a little out of the ordinary, but the reason for doing it was so that we could move an engine with the shop doors closed, drop out any wheel under the engine that was required, and get any part of it easily. We have hoists in connection with these drop pits. At each of our engine houses three pits are connected together in what we call the drop pit section. Upon these we may keep one engine, because we think that it is good practice to keep an engine in the round house on which the force may be employed when not engaged in other work.

We believe it is those little things to be done in a round house that go to make up good service. If an engine needs a driving wheel, why, most anybody can see that, but if it needs a cotter pin in some particular place some fellow is likely to overlook it; but where you have an adequate drop pit all these things can be observed easily. I desire to emphasize that it is important that engine house conditions and facilities should be made attractive and convenient and thus increase the work and the efficiency of the men. We have in our new terminals everything that goes to make for the comfort of the men and their convenience in the way of light, heat, toilet facilities, etc. We believe that by doing this, and keeping the place clean and tidy we can get better service.

Mr. DeVoy: I would like to ask Mr. Smith, of the Boston & Albany, if his road would recommend the extension of drop pits in round houses, especially in cities where space is cramped, to 150 ft. in order to permit the movement of an engine after you had dropped a wheel?

Mr. Smith: Yes, sir; decidedly.

Mr. DeVoy: I should much rather put a motor on my turntable, with a wire rope, to drop the wheel in that way than to build an extension of the drop pit. Even if you leave the engine outside, why, nine times out of ten she is dead and the little exposure will not hurt her at that time. Besides, it would be very expensive to get the necessary land in some of our cities for such a purpose, especially in cities where you have got to pay $500 a foot for it.

E. W. Pratt (C. & N. W.): The drop pit extension, which Mr. Smith mentioned, is in line with the practice that we are following in our later work. The fact that the modern freight service appears to have the consolidated engine in the majority, there are four pair of tank wheels and one pair of engine truck wheels to be dropped in the drop pit. If these truck wheel pits have an extension permitting the movement of the engine, take out any pair of tank wheels or a truck wheel and still keep the engine inside the roundhouse walls in bad weather.

The committee capitalizes the net freight earnings per locomotive. I have had a little experience myself in capitalizing various things, and I can assure you that it depends on which side of the fence you are which way you will check the figures. I notice that $900 a day for the 365 days in the year represents a total capitalization of $328,500, and that that would buy at the rate of $20,000 per locomotive 16 engines. Now, it seems to me that there is some fallacy in the statement there in that paragraph. They say that is equivalent to freight earnings of $45. Of course, you cannot controvert that. But you will have to show us in the West why you cannot get that same result by adding another locomotive. I believe that there are many places where we can make that saving by assigning engines regularly. We have got the pool on our brain so much that we oftentimes pool engines where their mileage is not up to the average of the engines on the system. Wherever regular locomotives can be assigned and good average mileage attained, I believe it will show something that is much more interesting than is shown in this statement of the paper.

A. Lorell: I think an overhead traveling crane is a very essential feature in the modern round house. A few years ago while on a western road I had occasion to install an electric traveling crane in a new round house that was being built, and the results were so satisfactory and the economy in its use was so great, both in the time saved and in the labor required in handling heavy parts of the locomotive, that a considerable number of such traveling cranes have since been installed on the same line.

Mr. Quereau: I will only say in closing that it was not the intention of the committee to go into details, but simply to discuss the subject on its broad general grounds. The list of tools to be kept at a terminal round house was not intended as one that should be applied to all terminal roundhouses everywhere. The list of tools given is for use in houndhouses where there is no power. It was specifically stated that each roundhouse must be considered by itself. The opinion has been expressed that an engine cannot be maintained at the roundhouse as cheaply as at the back shop. Now I cannot speak authoritatively on behalf of the committee, but for myself personally I am very much inclined to doubt that. On the contrary, I am of the opinion that a road which does 60 per cent of its repairs at the roundhouse and 40 per cent of its repairs at the back shop will have its engines in better condition and at a less expense. There are several factors entering into that. We must not forget that we are only one branch of a railway. If an engine breaks down on the road it simply means in our statement engine failure. It means to the superintendent's department freight delay, overtime, and other excuses that we cannot figure on. For that reason ample facilities for repairs at roundhouses I am personally persuaded will pay. Then, too, we should not lose sight of the fact that while we do not show in our cost of repairs the fixed charges, yet it is there just the same, and the fixed charges saved by repairs made at the roundhouse will probably mean a saving of from $150 to $200 per engine each year. This is an item that it strikes me is well worth bearing in mind.

Treating Water Without Treating Plants.

Until within a few years, only two methods for the prevention of incrustation in steam boilers have been prominent, namely, boiler compounds and water-softening plants. The former, which include the familiar soda ash, aims to keep the incrusting substances in a soft, pulverulent condition until they can be blown or washed out of the boiler. In locomotive service one of the difficulties connected with the use of boiler compounds is in applying them proportionally and regularly to all of the water. The plan of putting the matter in the hands of the engine crew was early found to be a failure. The next step was to put the dose for a whole trip into the tender tank at the beginning of the run. This method involves a considerable and possibly harmful excess of compound at the beginning, and a corresponding deficiency near the end of the run. The obvious remedy is to transfer the base of operations from the locomotive to the wayside tank. To secure this, as well as some other advantages, separate softening plants have been adopted and have easily proved their usefulness.

The small station must be able to respond to occasional heavy consumption for short periods and a softening plant having sufficient capacity for this purpose becomes expensive during normal times. A very useful compromise between the two systems of treatment is an apparatus of simple construction which will mix the water uniformly with the proper proportion of some chemical solution which, although it will not actually remove incrusting solids, will act as a boiler compound in keeping them in a soft condition in the boiler. If a fair storage capacity is provided, partial removal of incrusting matter may also be effected. The work of the committee indicates that few railway officers realize the importance of this idea or the benefits to be derived from its systematic and intelligent application. At track-trough stations soda ash (or other material) may be thrown directly into the trough, in regulated quantity, after each train passes. This crude but fairly effective method is used on one road at four stations, pending the installation of automatic devices.

Much more systematic is the plan of pumping the solution with the water. This plan is used by seven roads. A small branch may be run from the water-pump suction to a tank of solution and the flow of the latter be regulated by a valve. This method has the advantage of producing a thorough mixture during the passage through the pump, but also sometimes causes deposits on the valves of the pump which interfere with their action. It is found preferable to pump the soda with a small power pump actuated by direct connection with some moving part of the water pump, thus insuring a correct proportional feed of solution. The discharge of the chemical pump should be carried to the large water tank independently of the water. In the water tank the chemical pipe should discharge close to the main water inlet in order to produce satisfactory mixture. As it is not practicable to run the small chemical delivery pipe for long distances, this system is not desirable when the tank is more than 100 ft. from the pump house. When distances are greater the chemical apparatus should be separated from the pump house and transferred to a point close to the water-storage tank or to the top of the tank

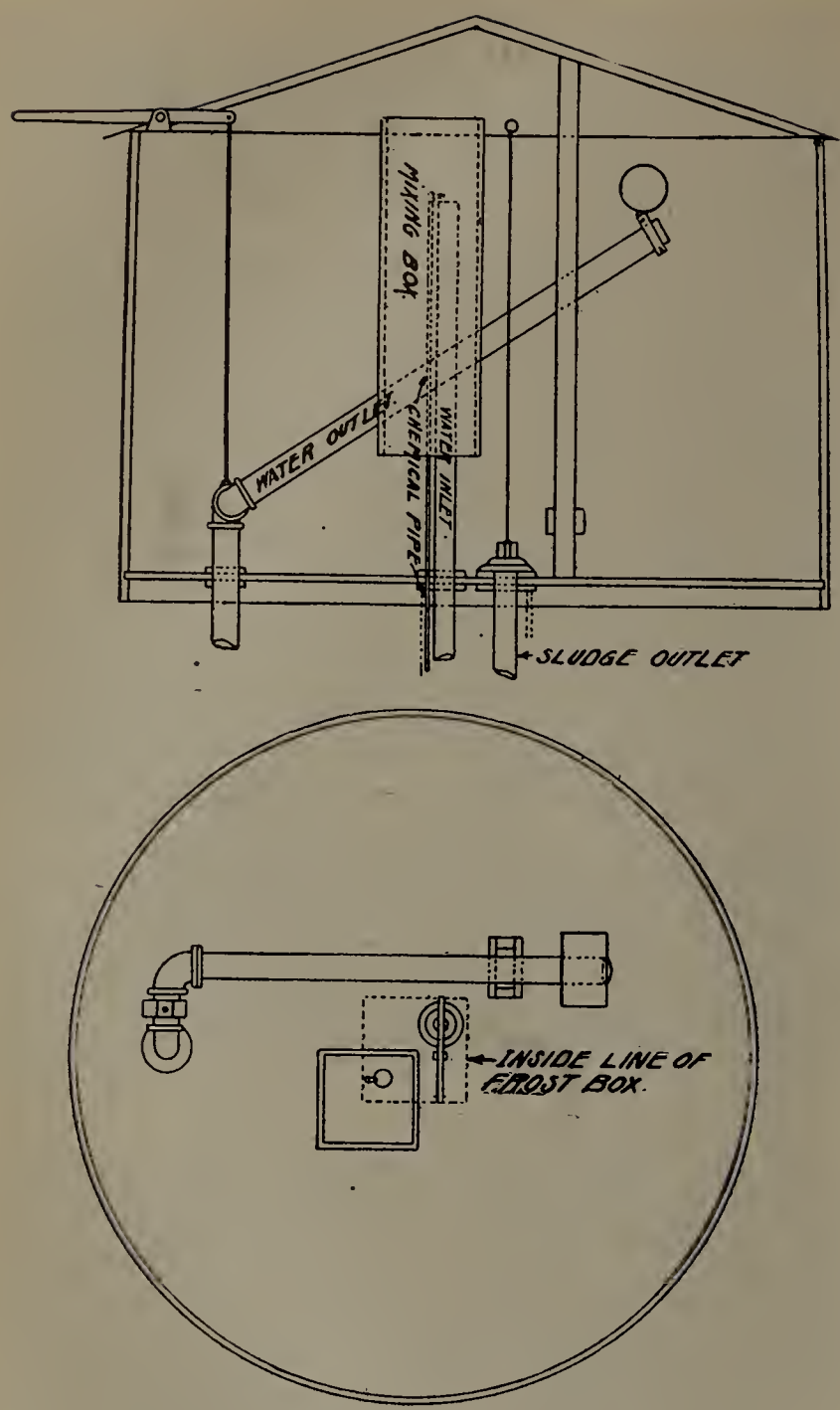

Fig. 1—Wooden Tank for Water Softening.

itself. In such cases, the chemical pump may be actuated by a positive displacement motor or water wheel through which passes all, or a definite aliquot, of the water to be treated. While such a device has long been used in full softening plants, it is not used for the simpler treatment, so far as the committee has learned, except on one road (the L. S. & M. S.). The same arrangement is suitable when water is taken from city supplies where the railway company has no water pumps. For pumping chemical solutions, simple single-acting, outside packed plunger pumps with outside check valves are much to be preferred. Plungers one to two inches in diameter and of six to ten inches stroke are sufficient. Their attachment to any convenient moving part of a water pump is very simple.

The essentials of the arrangement recommended for the usual wooden tub, when it is located near the pumping station, are shown in Fig. 1. The water and chemicals mix in the central compartment, which may be merely a wooden box, and pass down and out at its bottom, rising gradually in the main part of the tank. The water is drawn off through the floating pipe and a sludge valve is also provided. Fig. 2 shows a similar arrangement for a steel tower. Owing to the larger settling space in the tower, a floating outlet is not necessary. The choice of suitable chemicals for the treatment of water under the conditions covered by this report is limited. It is very important to avoid the production of any sediment whatever, or else to provide both time and space in which to separate the sediment entirely. The separation of sediment in the pipes must obviously be avoided. When sediment must be avoided, as in ordinary wooden tanks when the water is used within two to four hours, soda ash, or possibly bicarbonate of soda is the only reagent available. The later is least apt to produce sediment. Neither reduces the total amount of incrusting matter, but both change it all to carbonate, or bicarbonates, so that hard scale is largely avoided. This treatment has been found very beneficial on a number of roads. It is applicable to waters of moderate hardness. With very, very hard waters, the amount of soda required to decompose the incrusting matter is liable to cause deposits. In this use of soda ash, as well as with soda ash placed directly in the tender tank, blowing and washing out must be done thoroughly at regular and sufficiently frequent intervals.

In the opinion of the committee the case well merits the small further elaboration of process and apparatus, sufficient to separate a considerable amount of sediment. For this purpose a steel tower, as shown, and the use of caustic soda are recommended. With correctly proportioned apparatus and proper adjustment of the soda, a water of twenty or more grains of incrusting solids, of which 25 to 50 per cent is permanent hardness, may be reduced to ten grains, of which all is carbonate. In this manner a very troublesome water is reduced to one which will give very successful service, with reasonable care of boilers. So far as the committee is aware, this process is in use only on the Lake Shore & Michigan Southern, although after this report was practically complete it was learned that the Philadelphia & Reading used it some years ago.

One other reagent deserves mention and that is barium hydrate. It has the great advantage of treating sulphates without introducing foam-producing alkali. It should be borne in mind that barium hydrate is poisonous. The principal objection ot its use is its cost. Not only is its price per pound higher than that of soda ash, but more pounds are required. It has, however, been used by a few roads on very high sulphate waters which could not be treated satisfactorily with soda. In actual work, one road reports that five engines were treated one month with 4,290 pounds of soda ash costing $42.90, but, although this was all that could be used on account of foaming, the boilers were not clean. It was estimated that about twice as much, costing about $85, would have kept the boilers clean if it could have been used. For the same engines 13,000 lbs. of barium hydrate, costing $390, was sufficient to keep the boilers clean. It must be borne in mind that these waters are very much worse than the average boiler water of the country. Finally, it is urged that water purification of any kind should always be supervised by a competent chemist. The raw water should be analyzed occasionally and the chemical solutions, as well as the water that has been treated, should be tested frequently.

The report is signed by:—H. E. Smith (L. S. & M. S.), chairman; F. O. Bunnell (C. R. I. & P.), L. H. Turner (P. & L. E.), J. E. Mechling (Vandalia), and J. J. Connors (C. M. & St. P.)

Discussion on Best Method of Treating Water.

Angus Sinclair: I have had considerable experience in my time in trying to eliminate impurities from feed water. There are certain waters that contain elements that cause encrustation, and they are not the same in all waters. Yet you take the same dose and apply it to them all, and, if the dose you give doesn't remedy the evil, you think the case isn't worth curing. All bad feed waters should be under the supervision of a chemist who is able to tell by analysis what should be done and what elements will put the bad encrusting matter out of solution. That is something that is not understood by every man connected with a feed-water station, and it ought to be systematically attended to if any remedy is attempted at all. I think the greatest disappointments in connection with water purification, or the preventing of the bad effects of hard water, have been ignorance in the treatment.

J. F. Dunn (O. S. L.): We have used both systems. That is, we have treated the feed water in the tank by soda ash and lime, and we have also used a compound introduced into the tank on the tender. Our experience has been that we have got much better results with the use of the compound. It has been put up under the direction of a chemist after analyses of the different waters, and it has reduced our flue failures considerably and also has decreased the trouble we had with the cracking of fire-box plates. It is handled entirely by the hostler in the engine house. The engine men like it so much now that they won't got out on the road without a certain quantity of this compound in their engines.

A. Trumbull (Erie): We believe the proper thing to do is to treat the water before it is introduced into the boiler. I believe a little study on the part of any one of the results of the solids found in boilers will convince them that that is the most desirable practice. We have one recognized standard of treatment which has been highly successful, and we have reduced our water washing period very considerably after its introduction and have obtained very good results in the way of boiler maintenance generally. We have had some experience also with the soda ash treatment. While that may be a temporary expedient to employ where great difficulty is found with bad water, nevertheless it is only a temporary remedy and ought to be replaced with some more modern scientific method.

J. Christopher (T. H. & B.): I have had a great deal of experience with bad water on our road. In dry seasons of the year the water analyzes as high as 70 per cent sulphur, and we have found that we were creating sulphuric acid in our boilers. I had difficulty in convincing the management of the road of the necessity of treating this water. We used a compound. This compound was dumped in the tank, and it was good for all the water in the tanks over a strecth of 180 miles or more. The only proper way to treat bad feed water is to treat it and then discharge it in the tank. We find that we have to vary our treatment of this water as close as 48 hours. Therefore, it is quite necessary that the operator shall have full knowledge of the variations that are taking place in the water that is flowing into these stations. In some of the creeks I have found as high as 20 streams of sulphur water. Through the wet season with soda and hydrates of lime we reduced that as much as 80 per cent, and then we have to run it up again, in the dry season, We have had cracked flues on our consolidation engines every trip, but since the treatment of this water in this way,, we only touch up the flues at every wash out, which is about once in two weeks. The life of the fire-box is pro-

longed to the extent that the fire-box work alone will pay for the tank in a year. The operation of the tank is conducted at very little expense. We have a wheel connected with the discharge pipe and a current of water flowing through this discharge pipe operates a wheel which provides power for the agitator, and also at the same time drives a pump for throwing the chemicals into the top of the high tank.

S. L. Bean (A. T. & S. F.): Our experience has been similar to that of the last speaker. Our system of treatment is managed by our chief chemist, and I cannot go into the details of it, but I know since we introduced the system it has worked very well and has increased the mileage of a set of flues from 15,000 to 40,000. We are equipping a feed water plant now at quite an expense for use where we have a great deal of very bad water. We have found where we have the system installed that it has increased the life of the fire-boxes from 12 months, oil burning, to 7 years.

D. J. Reading (P. & L. E.): We have the same system of treating water in use that I believe the last two speakers have. We precipitate practically all of the solids in our wayside tanks. A difficulty arises then when the water is so very bad that it becomes light and foamy after the treatment, and then we use what is called an anti-foaming compound. I hoped to hear some one outline a scheme for getting rid of the foaming without the necessity of using another compound for that purpose. I understood that there was a system by which the foam passed off as steam without getting down into the water in the boiler.

E. W. Pratt (C. &N. W.): I should be glad to answer Mr. Redding as to what to do to prevent the foaming on what call over-treated water. We have some water that in order to remove the considerable amount of encrusting caused by over-treating, and which causes more or less foaming, where we apply blow-off cocks liberally to the boiler near the mud ring, and use it very frequently at short intervals. Our former practice was to blow out locomotives at the terminals or when standing at outlying places, but we have had much better success in avoiding foaming and preventing leakage of flues by blowing out practically between every station. Those are detailed instructions to the men, and they are quite generally carried out. We ask the men in charge of the engines if there is any trouble for an explanation of it, and if they do not blow out once at every station. I may say that our stations average perhaps 6 miles apart. Now, we have not had a failure from foaming engines that I recall in six or eight months, whereas there used to be a great many each day.

With regard to installing feeding plants at wayside stations, it has been our custom to ascertain the number of pounds of encrusting solids in the water per 1,000 gallons and the number of gallons used at any feed water tank in 24 hours. In that way we would install a feeding plant wherever the greatest number of pounds of encrusting solids developed in 24 hours. That did not always mean where the poorest water was. It was sometimes poorer waters are treated in this way. We always use soda ash found in good water. The plants have been extended, and the quite extensively where we have none of these treating plants.

Mr. Redding: I would like to know whether Mr. Pratt has any data to show whether it costs more to treat water at each station or to put in the anti-foaming compound. I would also like to know whether they have had any trouble in the blow-off cocks between stations. I wanted particularly to find out whether or not there was any system of injecting water into the boiler which would give an opportunity for the foaming to pass off in steam.

A. E. Manchester (C. M. & St. P.): The question raised as to barium hydrates: We have had a little experience on a branch in South Dakota, where the water was of such a character that in order to soften it so that it could be used in the locomotive it became overtreated and was too light, and we used the barium hydrate there for nearly a year with very satisfactory results. As to the anti-foaming compound: Instead of blowing out, there is a large territory in South Dakota in which alkali water is the only reliable source of supply; the hard waters are too scarce to be relied upon, and we are using an anti-foaming compound in connection with that water. It does very nicely until the concentration of alkali gets up between 600 and 800 grains to the gallon, and then we begin to have trouble even with the anti-foaming compound. They we have to commence this blowing out process to keep it below 600 grains.

Mr. Wells: I did not understand what Mr. Redding meant about treating water so that it would not foam. I think it is pretty well understood that the foaming principle in water is carbonate of soda, and the only way that it can be taken out is by evaporation. It cannot be treated out. You always get carbonate of soda when you treat sulphate of calcium. Barium hydrate treats the sulphates of calcium and does not leave any foaming. It is the best thing that I have seen that has been suggested. I do not know of any way to prevent the foaming with the possible exception of the introduction of some anti-foaming compound, but that would be only temporary and would only last a short time.

I was interested in Mr. Manchester's statement that they are able to carry the degree of separation up to 600 grains to the gallon. We found on the Burlington that a boiler would begin to foam ordinarily at about 200 grains to the gallon. We hope some day that some one will suggest a method to help us out on the foaming.

Mr. Christopher: After we began to treat our water we had great difficulty with the foaming. We got our chemist after the difficulty and he analyzed the water, but could not seem to understand why it foamed. Many of the engine crews supplied castor oil themselves to save them annoyance and trouble in getting up heavy grades.

C. E. Gosset (M. & St. L.): I am closing my 24th year in the northwest in continuous railway service on 8 different lines.

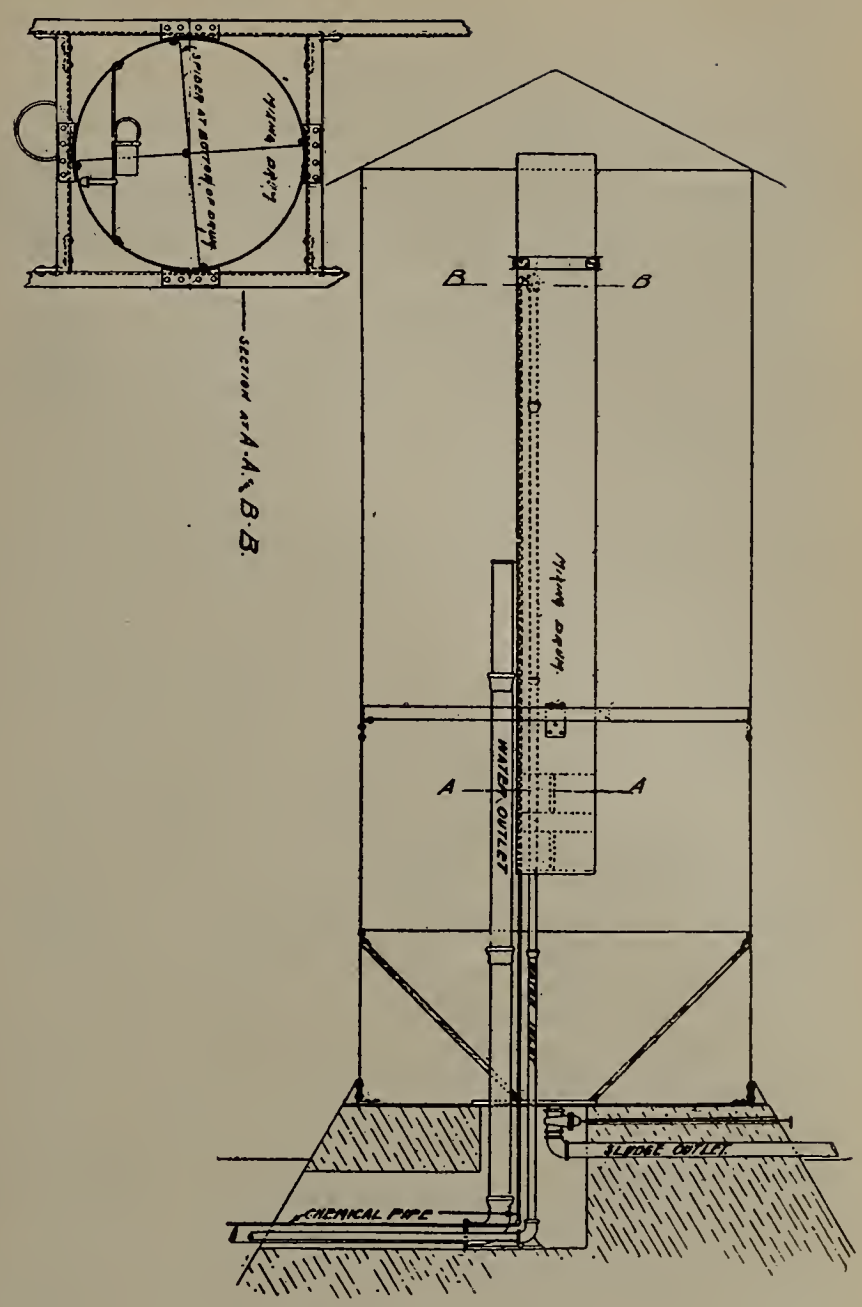

Fig. 2—Steel Tank for Water Softening.

During that time I have had to deal with some bad water. The road I am connected with now operates an 800 mile tract where we have only from 2 to 4 trains daily, and therefore our side tank feeding proposition is prohibitive. Without the use of soda ash we could only get along a few days without blowing out. I selected four consolidation type of locomotives, two of them being used in freight service locally and two in through freight service. For the two local freight engines I selected a mechanical draughtsman from my office and one from the road engineer's office, and on the through freight engines I put two road foremen and had them make every trip and watch results. The result was that we reduced our boiler repairs 62 per cent by the use of the compound over what we did with the soda ash. The miles, per boiler washing, was doubled. Our cost per thousand freight ton mile was about two pounds less.

Mr. Smith: The committee realizes that there is no one method of treating water that is apt to be good for every road. The subject given to the committee, however, limited it to no one particular line, which we have tried to adhere to. On any one road it will very often happen that all of these methods may be necessary at one time or another. Furthermore, the same thing applies to chemicals—no one chemical is equally efficient for all cases, and we do not wish to put ourselves on record as advocating soda ash for every purpose. So far as boiler compounds are concerned, of course, a discussion of those would bring us into the line of proprietary articles.

With reference to the method of injecting water to evaporate foam producing substances, it does not appear to me personally how such methods could be carried out. As has already been stated, the foam producers are nearly always alkaline, especially in treated water. There may be some cases in which some volatile substances were present, and it could be removed by injecting the water into the steam space with suitable baffle plates or fans or something of that kind. A surface cock has sometimes been found much more efficent in reducing foam than the bottom blower. Also, it is quite frequently the experience the foam is much more prevalent when a system of water treatment is first entered upon, but after the boilers are cleaned and the old scale or mud removed, the foam disappears very largely. The discussion has also brought out one other point, that almost any system, with thorough supervision, produces much higher results than some other system which has not been watched

closely, for the reason possibly that it has been standard for a number of years.

Lubrication of Locomotive Cylinders.

The committee compiled the following questions, which were submitted to members:

1. Have you experienced difficulty in lubricating modern passenger and freight locomotives, with steam pressures from 180 lbs. to 230 lbs., with the up-to-date lubricators which operate by condensation of steam, adjustable feed, etc., and, if so, state experience and causes for same?

2. What recent improvements have been made in the hydrostatic-feed lubrications, to add to their efficiency and economical operation? Give explanation, experience and results.

3. If familiar wth any device, independent of the hydrostatic-feed lubricators as furnished by the manufacturers, which increase their efficiency or economical use, give description, principle of operation, etc.

4. For the lubrication of valves and cylinders on modern locomotives, state your objections, if any, to the up-to-date hydrostatic-feed lubricator.

5. What types of mechanically operated lubricators have you used? State method of application, principle of operation, control and regulation of feed, location of device on the locomotive, with experience and results.

6. For the lubrication of modern locomotives, valves and cylinders, state your objections, if any, to the mechanically operated lubricator.

7. Are you familiar with any method, or device, for admitting the oil into the steam before it reaches the saddle casting? If so, state details, experience and results.

8. Have you had any experience with the oil-delivery pipe attached to deliver the oil into the steam-way in the saddle casting, instead of at the steam chest or valve chamber? State results.

9. What has been your experience in the lubrication of locomotive cylinders where superheated steam has been used? In this connection state the degrees of temperature acquired, if hydrostatic or mechanically operated lubricators were used, and the results from both, where both have been used.

10. Do you consider it necessary to lubricate cylinders of locomotives using superheated steam, independently of the valves, using any type of lubricator?

11. What is your experience with the lubrication of cylinders on Mallet compound locomotives, using superheated steam with the hydrostatic-feed lubricator? With the mechanically operated lubricator?

12. Do you consider it necessary to lubricate the valves and cylinders on the high and low pressure cylinders of Mallet compound locomotive (by lubricators of whatever type) piped independently to each valve chamber and cylinder?

The replies to questions No. 1 were universal in expression, that there is no serious difficulty now experienced in lubricating modern passenger and freight locomotives with the up-to-date lubricators of the hydrostatic-feed type. Several of the members, in reply to question No. 2, have referred to a recent improvement in the hydrostatic lubricator, whereby it is made possible to close or shut off feeds without interference with the feed-valve adjustments. This is an economical feature, but of such recent date that no comparative data have been submitted as to the results obtained. The replies to question No. 3 were limited. One member replies as follows: "The automatic steam-chest choke plugs, which feed against a constant boiler pressure in the oil pipe, and not against a pressure that fluctuates with pressure in steam chest, will result in a high degree of efficiency in the lubricator."

All replies to question No. 4 indicated there were no objections. The replies to questions Nos. 5 and 6 embody the same general information, but were limited in number. Some are given herewith:

a. "Have used several types of mechanically operated forced-feed lubricators. Three of those experimented with were driven from a moving part of the engine. This was unsatisfactory, since the feed is required that does not vary with the speed of the engine. More oil is required per minute while the engine is worked hard at low speeds than when running fast with a light throttle. To overcome this we used some forced-feed lubricators with independent air motor. None of them, however, have been satisfactory. It is difficult to apply to the filling holes screens that are fine enough to keep out dirt, without restricting the speed at which the oil can be put in, and the enginemen pull them out. The consequence is that the plungers wear rapidly, and after a time the feed becomes irregular. They are troublesome to maintain, and under conditions specified, in answer to question No. 1, gave no better results than the hydrostatic lubricator."

b. "We have experimented with two or three makes of mechanical feed lubricators, but have been unsuccessful in getting as good results as we do with the hydrostatic-feed lubricators. The trouble with the mechanical feed lubricator seems to be due to the difference in temperature; in warm weather or during the warm part of the day, they would feed sufficient oil, but in cold weather, or at night when the weather is colder, they do not feed as well as when it is warmer."

c. "We have used two mechanical lubricating devices, which received their motion from a connection made to the valve stem and oil chamber, and the regulating devices were located in the cab. Our test record shows that after considerable experimenting the device operated fairly well, but after a time it gave considerable trouble and was finally removed on account of not giving satisfactory results. Mechanical means are objectionable, in that the device is so complex, and consists of so many parts, it is difficult to keep joints from leaking. To be properly installed, all pipes must be kept constantly filled and under pressure, with return valves at distributing points. On account of mechanical movements, parts will wear, and it will be more expensive to maintain, and in making repairs more oil is lost than with hydrostatic lubricators. Devices of this sort do not appear to have as yet been perfected to such an extent as to make them thoroughly reliable."

d. "Have used a force-feed lubricator with pipe connections to all the driving boxes and to the steam chest. Operated by a mechanism deriving its motion from a connection to the Walschaert link. Lubricator was located in the cab. While reducing friction on the journal bearings, and delivering oil to the steam chest, I do not consider it entirely satisfactory, for the reason that there is nothing to indicate that the pumps are working properly and delivering the oil until the valves become dry."

e. "Our objection to mechanically operated lubricators is that they are necessarily more complicated than the hydrostatic lubricator, without showing any beneficial results."

f. "Have tried some, but have not obtained satisfactory results."

g. "We have in the past used on some of our two-cylinder compound engines mechanically operated lubricators. Our objection to it was the rapid wear of the parts, leakages and annoyances."

h. "Using displacement plunger force feed. Secured in suitable location in cab, and operated by a series of rods and bell cranks, which are connected, either to eccentric blades and independent eccentric on rear or other convenient axle, or by reducing-arm on back crank pin. Device subject to varying control, and fed by increasing or decreasing the stroke of the plungers by means of adjustment thumb-nut. Results as to economy and distribution very satisfactory. Slight trouble experienced in experimental stage, due to method of operating lubricator."

There was but one reply to question No. 7, citing experience which is herewith submitted:

"Present method in use with mechanically operated lubricator is to tap direct through dome into steam pipe, or throttle box. This method has proven to be superior to the old method of admitting to steam chest direct."

In this connection, and pertinent to the question, a member refers to a test:

"Delivering the oil from the right side of the lubricator into the left cylinder, passing it through the smoke box, and from the left side of lubricator into the right cylinder in the same manner. The gases in the front end superheating the oil and evaporating the water of condensation, putting the oil into the cylinders superheated."

The substance of the replies to question No. 8 from those who have had experience was in accord with the report from a member who has tried this method extensively:

"On slide-valve engines consider results distinctly superior; on piston-valve engines reports vary, but general experience is that better results are obtained by putting oil into the steam passage."

Questions Nos. 9 and 10 have been considered jointly by the members. In the information submitted, the important features of this phase of the subject are well expressed in the quotations, as follows:

a. "Superheat varies from 550 to 580 deg. F. Our regular practice is to use one feed pipe to valve chest, applying it to go to each end of valve in center of the valve bushing. This lubricates the valve very well, but it is questionable whether delivering oil to the steam passage it not preferable. We also use one feed to each side of the cylinder, at the top and in the center. This is not used unless required. When working with full throttle and long cut-offs, over considerable distances, the cylinder feed was found necessary. There is no difficulty whatever in obtaining satisfactory lubrication in superheater engines with hydrostatic lubricators, on account of difference of pressure between steam chest and boiler, previously mentioned. In fact, there is considerably less difficulty than on engines using saturated steam. In spite of this the piston-ring wear is far more rapid."

b. "On our superheaters we carry 170 lbs. boiler pressure; the maximum degree of superheat is 225, on a number of superheater engines we introduced an oil both at the steam cavity and into the cylinder direct; the latter connection was found unnecessary. The only trouble which we had with superheater engines was to get our men to use the drifting valve when the engine was shut off. It this is not done, trouble was experienced with the bushings cutting out, but on districts where the drifting valve is put on we are having very good success."

All replies to question No. 11 pertain to the satisfactory use of the hydrostatic lubricator. No information was furnished concerning the use of mechanically operated lubricators on Mallet compound locomotives using superheated steam.

Replies to question No 12 were at variance as to the location of the oil pipes, but it was the consensus of opinion that piping to the high-pressure valves and cylinders only was insufficient for satisfactory lubrication.

The experience of the committee, supplemented by the information received from the members of the association, warrants the assertion that there is no serious difficulty now experienced with the use of the hydrostatic-feed lubricator. The recent addition of a stop-feed feature is an improvement, rather tending to economical operation than to efficiency, and it behooves the manufacturers of this device to keep pace with, or in advance of, the constantly increasing demands.

The information obtained from the members, and cited in the foregoing, confirms the experience and opinion of the committee,

that a properly constructed hydrostatic lubricator meets the locomotive requirements better than a mechanically operated lubricator, for the several reasons:

1. Familiarity with care and operation by the different classes of labor whose duties are in connection with its use.

2. Simplicity of design and substantial in construction; the operating parts being better protected from disarrangement or breakage.

3. A more accurate regulation of the amount of oil applied to the valves and cylinders under the varying conditions of service performed by the locomotive at different speeds and points of cut-off.

4. Because of less complication in construction and attachments, a corresponding less expense of maintenance.

The more general custom of delivering the oil to the steam chest or valve chamber is open to question, and there has been some very conclusive evidence submitted favoring the delivery of the oil into the steam at a point where it may become highly attenuated and intermingled with the steam. The presumed effect of extreme temperatures, due to high pressure and superheat upon the oil, has been an objection to delivering the oil in the steam before it reaches the cylinder saddle. Information has been furnished and confirmed by the experience of some of the members, that the efficiency of a properly compounded mineral cylinder oil is not seriously impaired when protected by the steam,

As the reports on this particular feature of the subject are indefinite, the committee recommends further consideration and experimentation. The information obtained from the members who have had the most general and extended experience with locomotives using superheated steam confirms the experience and opinion of the committee, i. e., that the same reasons advanced for the endorsement of the hydrostatic-feed lubricator on locomotives using saturated steam apply to locomotives using superheated steam. The information submitted and quoted in the replies, pertaining to the proper location and number of oil pipes on superheated locomotives, is of much value. The experience thus far is not sufficiently conclusive to justify a decisive recommendation at this time.

However, it is recomended that liberal openings be given to drifting valves, and attention to their proper manipulation, that the temperature of the cylinders may be promptly reduced within the lubricating possibilities of the oil when exposed to the atmosphere.

The problem of satisfactorily lubricating the Mallet compound locomotive is still in process of solution. At present it seems essential to pipe independently to the high and low pressure cylinders. However, the committee has been advised that there has been some experience, with satisfactory results, by eliminating the pipes to the low-pressure valves and cylinder, substituting an auxiliary oil pipe to the receiver with the high-pressure steam connection. This carries sufficient oil over to the low-pressure cylinders to insure good service. Increased efficiency and reduced expense of operation confront the mechanical departments of our railways to a greater extent than ever before. The final and most important recommendation of the committee is a continued live interest in the lubrication of locomotive cylinders.

The report is signed by: C. H. Rae (L. & N.), chairman; Jos. Chidley (L. S. & M. S.), T. R. Cook (Penn.), J. F. DeVoy (C., M. & St. P.), J. F. Walsh (C. & O.), S. T. Park (C. & E. I.) and P. M. Hammett (M. C.).

Discussion on Lubrication for Locomotive Cylinders.

George L. Fowler (Railway Age Gazette): I will simply repeat some information that I obtained the other day from Mr. Muzzey, who is mechanical engineer for the Long Island. They have been experimenting for the last six or eight months with a mechanical lubricator for cylinders, in which a mixture of oil and graphite is pumped into the cylinder, operated mechanically, and after a run of about two hundred miles the faces of the steam chests, valve seats and cylinders become coated with this film of graphite, and as far as that one engine is concerned, the operation has been very successful and very satisfactory, and they are inclined to think that it will reduce the internal friction of the engine to such an extent as to produce some saving in fuel.

There has been no data published, but it has been so successful that they are about to make an extensive trial, I understand, of some eight or ten engines, in which very exhaustive tests will be made to determine exactly what can be done from both a mechanical and economical standpoint in developing this method of feeding.

As the lubricator is so constructed that the old trouble of the graphite settling and becoming a sediment in the bottom of the oil is done away with by the mixture, which keeps it stirred up until it is actually deposited in the steam chest. Hence the operation is wholly satisfactory.

E. A. Miller (N. Y. C. & St. L.): We have found that very good results can be obtained by applying the graphite at the commencement of each trip to a cup, separate from the lubricator, and applying this graphite cup to our steam chests in addition to the regular lubricator.

George A. Hancock (St. L. & S. F.): We have fifty engines. with the steam temperature about 535 to 565 deg. We tried the mechanically operated lubricator and found it unsatisfactory. We had trouble on our connections with the ordinary lubricator. Instead of admitting the oil directly through the cylinder and valve, we connected the oil pipes direct to the steam passage. This in connection with a small amount of graphite gave satisfactory service. We are allowing for our freight engines one pint of valve oil for every forty miles, and one pint of valve oil for every sixty miles in passenger service.

Consolidation.

At the last meeting of the association the committee was instructed to ascertain if there would be any objection to the consolidaion of the two associations. An attorney has been consulted, and the committee reports that the consolidation can be carried through legally. That really carries out the instructions that the committee received at the last convention. In view of the president's remarks, in his address yesterday, it would seem desirable to have a committee continued on this subject.

Different Degrees of Superheated Steam.

(Paper submitted by Prof. Benjamin of Purdue University.)

The locomotive Schenectady No. 3, at Purdue University, has been equipped with a Schmidt superheater, giving substantially more superheating surface than the ones formerly used. This has rendered possible the use of still higher temperature, so that, whereas in previous experiments a maximum of about 200 deg. of superheat was obtained, from 200 to 275 deg. were used in the experiments described in this report.

Two conditions were to have been expected in these experiments; first, practical difficulty with the lubrication of the slide valve; second, less rapid improvement in economy at the higher temperatures. Neither of these conditions has been realized. Little difficulty was experienced with the lubrication of the valve and no maximum of economy has been reached. As far as the figures and tables in the present report are evidence, the coal consumption decreases more and more rapidly as the superheat becomes higher. There seems to be no practical limit to the gain to be obtained in this way, except the usual troubles incident to the use of superheated steam. Although these experiments are not yet completed, it has seemed advisable to call to the attention of the association the results so far obtained.

Equipment.

The same locomotive, now known as Schenectady No. 3, was used in all the tests. When used with saturated steam the locomotive was in normal condition. After the tests on saturated steam had been completed it was first equipped with a Cole superheater, and the results from tests of superheated steam, as reported to the Master Mechanics' convention in 1909, were obtained with the original superheating surface of 193 sq. ft. (neglecting header). The work as reported last year was from results obtained after reducing the superheating surface by two successive decrements of 42 sq. ft. each, or approximately 21 per cent at each reduction.

Prior to the experiments described in this report, the locomotive had been overhauled and a Schmidt superheater installed in place o fthe Cole superheater. In order to distinguish between the different superheaters as used on Schnctady No. 3, in last year's report, the first superheater was known as Cole A, the second as Cole B and the third as Cole C. The superheater in this year's report is referred to as the Schmidt. The heating surface of the tubes of the four superheaters are:

Cole A	193 sq. ft.
Cole B	151 sq. ft.
Cole C	109 sq. ft.
Schmidt	324 sq. ft.

The boiler dimensions were the same for all the Cole superheater tests, but in order to install a Schmidt superheater. with a larger amount of superheating surface, the number of small 2-in. flues was reduced from 111 to 107, and the large 5-in. flues were increased in number from 16 to 21. This change in the number of flues increased the water-heating surface from 897 sq. ft. to 956.5 sq. ft. With the above exception, the boiler and engine were the same for all the testing upon the four different superheaters.

The nominal dimensions of Schenectady No. 3, as used in the tests with the Schmidt superheater, are as follows:

Type	4-4-0
Total weight (pounds) about	109,000
Weight on four drivers (pounds) about	61,000
Driving-axle journals:	
Diameter (inches)	7½
Length (inches)	8½
Drivers, diameter (inches)	68.99
Valves—Type, Richardson balanced:	
Maximum travel (inches)	6
Outside lap (inches)	1⅛
Inside lap (inches)	0
Ports:	
Lengths (inches)	12
Width of steam port (inches)	1.5
Width of exhaust port (inches)	3
Total wheel base (feet)	23
Rigid wheel base (feet)	8.5
Cylinders:	
Diameter (inches)	16
Stroke (inches)	24
Boiler—Style, extended wagon top:	
Diameter of front end (inches)	52
Number of 2-in. flues	107
Number of 5-in. flues	21
Length of flues (feet)	11.5
Heating surface in flues (square feet)	956.5
Heating surface in firebox (square feet)	123.5
Total water-heating surface (square feet)	1080.0
Length of firebox (inches)	72.06
Width of firebox (inches)	34.25
Depth of firebox (inches)	79
Grate area (square feet)	79
Thickness of crown sheet (inches)	⅞
Thickness of tube sheet (inches)	½
Thickness of side and back sheet (inches)	⅜

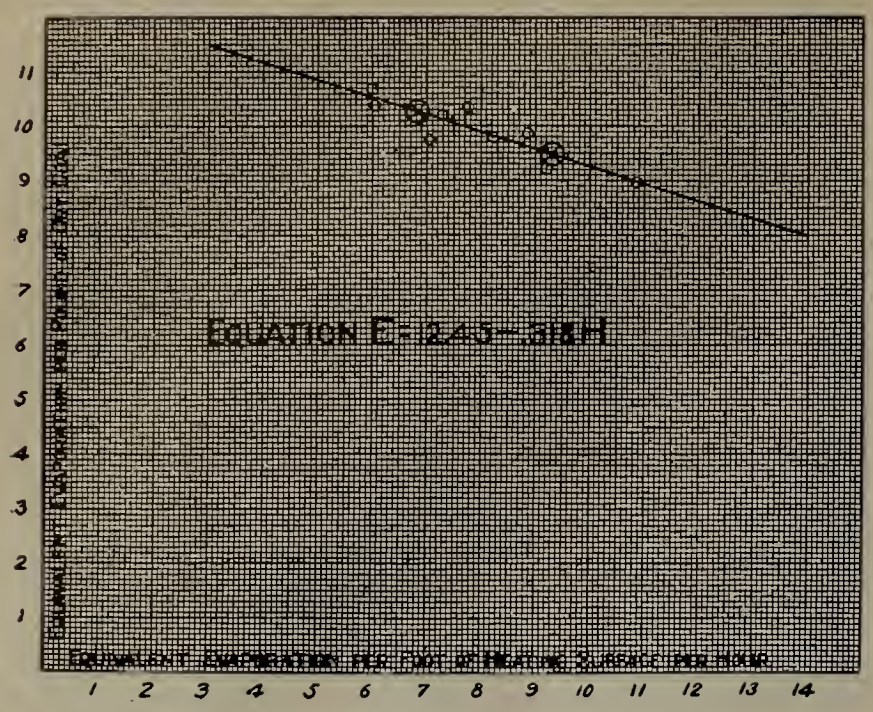

Fig. 1—Coal per Sq. Ft. Heating Surface, Schmidt Type.

Diameter of stay bolts (inches)	1
Diameter of radial stays (inches	1⅛

The Schmidt superheater, as used in these experiments, has the following dimensions:

Outside diameter of superheater tube (inches)	1⅜
Number of double return loops	21
Average length of the pipes in the double return lops (feet)	42.8
Total superheating surface based on the outside surface of the tubes insquare feet	324

The total water and superheating surface of the locomotive equipped with the Schmidt superheater is 1,404 sq. ft.

Tests with Schmidt Superheater.

Following the method primarily adopted, the tests on the Schmidt superheater were run at 200, 160 and 120 lbs. pressure. The tests at 200 lbs. were omitted because it was felt that there was no further need of tests at this high steam pressure. The speeds and cut-offs adopted for the tests were the same as those used last year. The tests were all run during the months of April and May of this year.

Lubrication of the Valves and Cylinders.

After a few tests, however, it was found that no more oil was required with the Schmidt superheater than was used with the Cole superheater. The oil used in all of the superheater tests was 600 W. The amount of oil used was approximately one drop (through a sight-feed lubricator) to each valve box for each 12 to 30 revolutions of the locomotive, and one drop to each cylinder for each 30 to 60 revolutions of the locomotive, depending upon the length of valve travel. That is, a short cut-off and high steam pressure required more oil than a long cut-off and lower steam pressure. The amount of oil used in a 75-mile run (this being the length of each test) varied from 1½ pints to 3 pints. This amount of oil may seem rather high to a railway man, but to insure against the cutting of the valve, more oil was used than was really necessary, as was shown by the fact that during none of the tests was there any evidence of dry valves. An inspection of the valves and cylinder wall after all the tests had been completed showed a high polish and no cutting.

Evaporative Efficiency of Combined Boiler and Superheater.

The fuel used in all tests was Youghiogheny lump. The equivalent evaporation (pounds of water evaporated from and at 212° F.) per pound of dry coal, plotted against rate of evaporation, equivalent evaporation per foot of water-heating and superheating surface per hour), is shown for the Schmidt superheater in Fig. 1. The equation for the line most nearly approximating all the points is

$$E = 12.45 - .318\ H$$

where E is the equivalent evaporation per pound of dry coal and H is the equivalent evaporation per square foot of water-heating and superheating surface per hour. The area of the heating surface is based upon the interior surface of the fire box, and the exterior surface of the boiler and superheater tubes. This equation is derived from all tests at all pressures, and, therefore, fairly represents the average performance of the boiler at any pressure. It is to be noted that a majority of the points which represent individual tests fall very near the average line, which was obtained by finding the center of gravity of two groups of points and drawing a line through the two points thus found. These points are shown by a cross inscribed in a circle.

Degree of Superheating.

The temperature of superheat was obtained by high-grade mercurial thermometers placed in thermometer wells in the branch pipe at a point directly adjoining the superheater header.

The following table gives equations for finding the degree of superheat at different boiler pressures:

Before Pressure.	Equation.
120	$T = 107 + 16.5\ H$
160	$T = 101 + 16.5\ H$
200	$T = 90 + 16.5\ H$

In the above table T equals the superheating degrees F., and H equals the equivalent evaporation per square foot of water and superheating surface per hour. Assuming a rate of evaporation which will give approximately 440 indicated horse-power, which is 8.5 lbs., the corresponding values of T for the various pressures can be obtained. The value of superheaters is expressed for the Schmidt superheater by the equation.

$$T = 133.8 - .216\ P + 16.5\ H$$

where T equals the superheat in degrees Fahrenheit, P equals the boiler pressure in pounds gage and H equals the equivalnt evaporation per square foot of heating surface per hour. The above equation is applicable for any pressure and any rate of evaporation.

The Ratio of Heat Absorbed per Square Foot of Superheating Surface to that Absorbed per Square Foot of Water-Heating Surface.

If the efficiency of the superheating surface be expressed as a ratio of heat transmitted through it to the heat transmitted through the water-heating surface of the boiler, or as the ratio of the equivalent evaporation per square foot, and this ratio be plotted for each test against the corresponding equivalent evaporation per square foot of water-heating surface per hour, the diagram shown in Fig. 2 will be obtained. Since this line represents tests at all pressures, it is seen that the efficiency of the superheating surface is increased with increase in the rate of evaporation. It is worthy of note that the efficiency of the superheating surface is equal to fifty per cent of that of the water-heating surface when the equivalent evaporation per square foot of water-heating surface per hour is 13 pounds or more.

Smoke-box Temperatures.

The temperature of the gases in the smoke-box was obtained by the use of a mercurial thermometer placed midway between the diaphragm and the front tube sheet. The equation of the line representing these temperatures is

$$T = 500 + 13.08\ H$$

where T equals the smoke-box temperature in degrees Fahrenheit, and H equals the rate of evaporation.

Corrected Results of Individual Tests.

The results of individual tests have been corrected to eliminate individual irregularities, the corrected results being shown in Fig. 3.

Column 16, which gives equivalent steam supplied to engine per hour, equals pounds of steam supplied to engine per hour from original log, multiplied by [b. t. u. taken up by each pound of steam in boiler and superheater minus (60 minus feed-water temperature), divided by 970.4 latent-heat of evaporation].

Column 17, which gives the equivalent evaporation per pound of dry coal, was obtained by substituting for H in the equation

$$E = 12.45 - .318\ H,$$

the values in column 16 divided by 1,004 sq. ft.

Column 18, which gives dry coal per hour, is obtained by dividing column 16 by column 17.

Column 21, which gives the machine friction in pounds of mean effective pressure, was taken from the 1909 report by Dean Goss, Vol. 43, page 158.

Column 22, which gives the machine friction in horse-power, was obtained by using valves of m. e. p. of column 21 and the speed in revolutions per minute of the individual tests, together with the indicated horse-power constant of the locomotive.

Column 25, which gives the draw-bar pull, was obtained by dividing column 22 by (.000547 multiplied by the revolutions per minute), in which .000547 is the tractive horse-power constant of the locomotive.

Column 26, which gives the coal per dynamometer horsepower per hour, equals column 18 divided by column 24.

Column 27, which gives steam per dynamometer horsepower per hour, is obtained by dividing column 16 by column 24.

Comparison of Results with Saturated and with Four Different Degrees of Superheated Steam.

As the area of the water-heating surface of the boiler with the

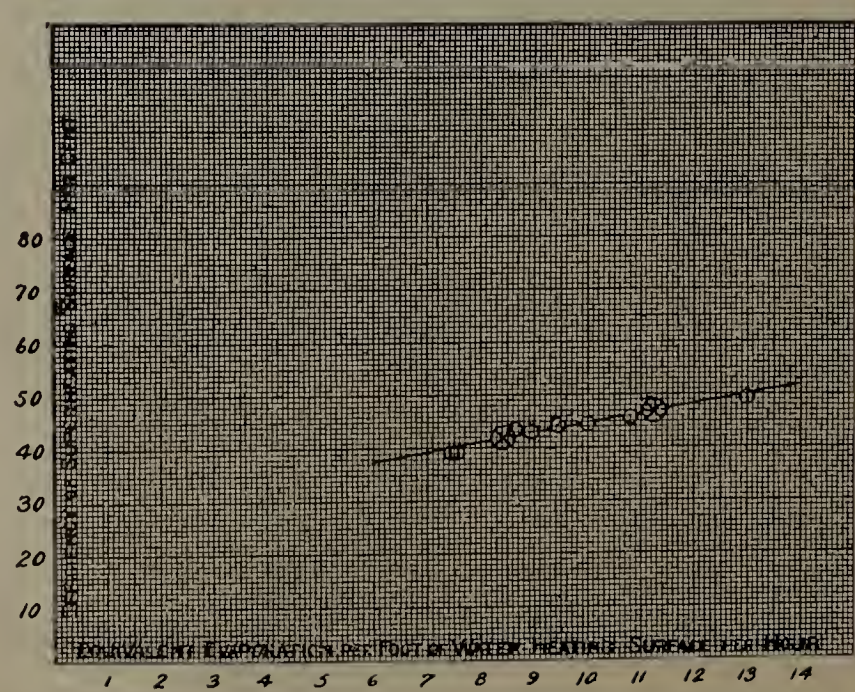

Fig. 2—Efficiency of Superheating Surface, Schmidt Type.

DESIGNATION OF TESTS.				CORRECTED LOCOMOTIVE PERFORMANCE											
NUMBER	LABORATORY SYMBOL.			EQUIVALENT STEAM TO ENGINE PER HOUR FEED-WATER AT 60 DEGREES F.	EQUIVALENT EVAPORATION PER POUND OF DRY COAL BY EQUATIONS	DRY COAL FIRED PER HOUR. CORRECTED BY EQUATIONS.	DRY COAL PER INDICATED HORSE-POWER PER HOUR	EQUIVALENT STEAM PER INDICATED HORSE-POWER PER HOUR.	MACHINE FRICTION			DYNAMOMETER HORSE-POWER	DRAW-BAR PULL	COAL PER DYNAMOMETER HORSE-POWER PER HOUR	STEAM PER DYNAMOMETER HORSE-POWER PER HOUR.
									M.E.P.	HORSE-POWER	PER CENT INDICATED HORSE-POWER				
I	II			XVI	XVII	XVIII	XIX	XX	XXI	XXII	XXIII	XXIV	XXV	XXVI	XXVII
1	30	2	200	8397	10.55	796	2.74	28.94	6.5	46.5	16.00	243.7	3017	3.27	34.45
2	30	4	200	10737	10.02	1072	2.44	24.50	8.5	60.2	13.70	377.9	4706	2.85	28.42
3	30	6	200	12817	9.52	1346	2.55	24.25	9.3	65.2	12.30	463.3	5840	2.90	27.67
4	30	4	160	8349	10.56	791	2.50	26.32	6.5	45.7	14.40	271.5	3415	2.92	30.75
5	30	6	160	10060	10.05	1002	2.55	26.91	8.5	60.2	15.30	333.8	4162	3.01	30.14
6	30	8	160	12372	9.64	1284	2.61	25.22	9.3	65.7	13.40	425.0	5320	3.02	29.12
7	30	8	120	9932	10.20	973	2.86	28.94	8.4	59.5	17.30	283.6	3533	3.43	35.02
8	30	10	120	11456	9.86	1162	2.77	27.30	6.9	48.5	11.70	371.2	4666	3.13	30.80
9	30	14	120	15183	9.02	1684	3.29	29.69	3.0	21.2	4.20	490.2	6112	3.43	30.98

Fig. 3—Comparative Performance of Locomotive.

Schmidt superheater is approximately only 47 sq. ft. greater than with the Cole superheater, it would seem that this difference would not be enough to affect the relative efficiency of the boiler. In the comparisons which follow, therefore, no allowance is made for differences resulting from different water-heating surfaces. In the tables and diagrams which follow, all material included under Saturated Steam and superheater Cole A. has been taken directly without change from the 1909 report, and that under superheaters Cole B and Cole C from the 1910 report.

The steam consumption of the locomotive operated under saturated steam and the four different degrees of superheated steam represented by Cole A, Cole B, Cole C and Schmidt are shown graphically in Fig. 4. From an inspection of these curves, it is seen that the tests with the Schmidt superheater, that is, the one giving highest degree of superheat, gave the lowest water consumption. The relation in coal consumption per hour for the four different superheaters and for the saturated steam is shown numerically in Fig. 5. Here again the Schmidt superheater results are the smallest, going as low as 2.5 pounds per indicated horsepower per hour.

The consumption of water per indicated horsepower, as affected by the degree of superheat, is well shown in Fig. 6, in which the pounds of steam per indicated horsepower per hour are plotted against the degrees of superheat. It will be seen that the comparisons are made at 160, 180 and 200 lbs. steam pressure, these being the pressures that fall in the center of the field of experiment, and for that reason would be more likely to represent correct results. As indicated last year, it would seem that this relation could be approximately represented by a straight line as shown. It is also seen that the water consumption for all pressures between 160 and 200 lbs. for the Schmidt superheater is practically the same.

The pounds of coal per indicated horsepower per hour plotted against degrees of superheat are shown in Fig. 7.

The same pressure of 160, 180 and 200 lbs. were used in this comparison as in the comparison for steam consumption. This relation between the coal per indicated horsepower per hour and the degree of superheat for pressures of 160, 180 and 200 lbs. would seem to indicate, as brought out last year, that it could be represented by a curve as shown. In other words, the first 80 or 100 deg. of superheat does not make the same proportionate decrease in coal consumption as does the second 80 or 100 deg., and, in like manner, the third 80 deg. increase makes a still greater reduction in the coal consumption. For instance, the coal consumption per indicated horsepower per hour at 180 lbs. steam pressure for the locomotive using saturated steam was 3.50 lbs., and for 80 deg. of superheat was 3.4 lbs., a gain in efficiency of 2.8 per cent; while the consumption at 160 deg. superheat is 3.05 lbs., a gain of 12.8 per cent, and the coal consumption at 240 deg. superheat is only 2.47 lbs., a saving of 29.4 per cent over that of the locomotive using saturated steam. Thus, if we take the locomotive using saturated steam as consuming 100 per cent of coal, it might be said that the first 80 deg. superheat will reduce this 2.8 per cent, the second 80 deg., 10.0 per cent, and the third 80 deg., 16.6 per cent, making the total reduction for 240 degrees superheat, at 180 lbs. pressure, 29.4 per cent. Practically the same results would be obtained for the curves representing 160 and 200 lbs. steam pressure.

A locomotive equipped with a superheater giving from 200 to 240 deg. of superheat will, during the time of running, effect a saving in coal consumption of from twenty to thirty per cent over that of the same locomotive using saturated steam. It would seem that the total gain in efficiency which could be obtained from superheat in a locomotive would not be reached until the temperature became too high for practical purposes.

Discussion on Locomotive Performance Under Different Degrees of Superheated Steam.

Prof. Arthur Wood (Penn. State College): There are one or two points in the paper that are of particlar interest to me. The first is the one that was expressed last year to the effect that the second eighty degrees of superheat gave a much better economy test on evaporation than the first eighty degrees. I take it that there is a decided reason for that, and that it is partly due to the cylinder concentration. When you get near the saturation point, you may have superheated steam and saturated steam in the cylinder at the same time. We do not know how much saturated steam you have, of course. So I am going to raise a question, for an answer here, as to whether or not it is fair to compare the economy of the first eighty degrees with the second eighty degrees or with the third eighty degrees of superheat.

The second point of interest in the paper that I have noted is that the net economy obtained, taking into account the three factors, is not given. The first of these factors, of course, is the gain due to the superheat on the basis of the increased heat that is given the superheat. The other two factors are negative. The first one of those is, of course, the loss due to the actual heat required to superheat. The second one of these factors is the loss due to depreciation, or rather the interest on the initial cost and to depreciation. If we take the curve representing that increased economy, and then the decrease from these two factors mentioned

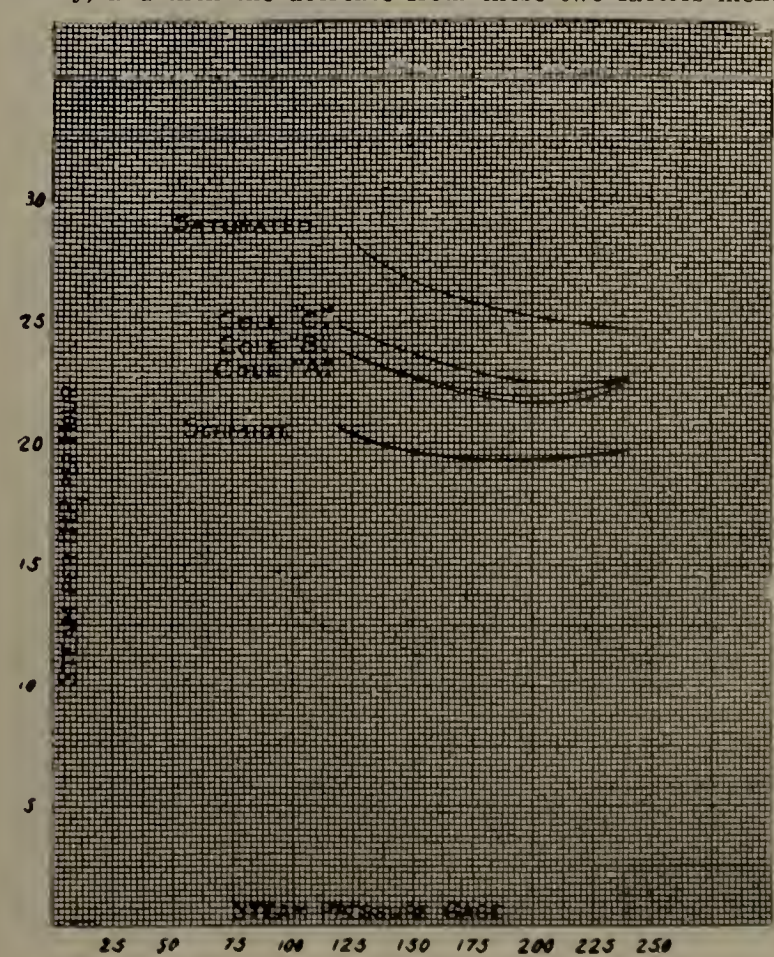

Fig. 4—Steam per I. H. P. for Different Types of Superheaters.

BOILER PRESSURE POUNDS GAGE	POUNDS OF COAL PER INDICATED HORSE POWER PER HOUR				
	SATURATED STEAM	SUPERHEATER COLE "A"	SUPERHEATER COLE "B"	SUPERHEATER COLE "C"	SUPERHEATER SCHMIDT "A"
I	II	III	IV	V	VI
240	3.31	3.12	3.24	3.20	2.63
220	3.37	3.00	3.16	3.16	2.57
200	3.43	2.97	3.11	3.18	2.55
180	3.50	3.01	3.16	3.22	2.51
160	3.59	3.08	3.24	3.35	2.55
140	3.77	3.17	3.33	3.45	2.63
120	4.00	3.31	3.48	3.60	2.82

Fig. 5—Coal Consumption Under Different Pressures with Different Superheaters.

in the case of a stationary plant, a steam turbine, we will find that there is a minimum point to the net economy curve, and that shows that the maximum economy on the basis of cost, comes out about 100 deg. superheat. Now, if these results could be put upon such a basis as that, where we could get the net economy by combining these three elements, I think we would have a very interesting result.

On the surface, of course, it proves that we have upwards of 16 per cent on the basis of the third eighty degree range in superheat. That, however, does not take into account these other elements I have spoken of. It seems as if we would not really expect a maximum point before we reached upwards of 270 deg. superheat.

H. H. Vaughan (C. P.): Those of you who have patiently listened to what I have said about superheating in the last few years must realize that this paper is quite a gratification to me. It explains very clearly several points that are experienced with superheated locomotives induced us to bring forward, but which we were unable to substantiate without any actual scientific experiments. For instance, one or two years ago I ventured to state that in my opinion it was a waste of money and time to worry about equipping locomotives with superheaters that only gave a superheat of forty to eighty degrees. At that time such cost was advocated with the hope that trying the system in that way would avoid some condensation, and that results would be very nearly as good as they would be with high superheat.

Professor Benjamin's paper shows us very distinctly how our experience was obtained, in practical service along these lines. The saving from low superheat is so small as not to make it worth while to maintain the apparatus. You will remember that I stated that our feeling was that until we got up to a hundred and fifty to 160 deg., we hardly began to realize the benefits of superheating. From what I have heard in the last few months of the successful results obtained with locomotives equipped with still higher degrees of superheat, I think we would have gained very much more if we had followed the practice of the Schmidt people and got a really high superheat.

A very interesting thing that strikes me in a cursory examination of this paper is a comparison of the diagrams. Fig. 7 shows how we obtain more and more economy as the superheat goes up. There, gentlemen, is the explanation of the increased capacity that we get in actual surface upon superheater engines. We have always found that the harder you work them the more superheat you get, and the greater the saving, so that, while perhaps your coal figures will only show a 15 to 20 per cent saving, yet, taking all the coal used, when you are working the engine hardest you are getting the most saving per horsepower. That is an increased advantage that we have always found in superheaters, and, while it has been frequently referred to, it has never been so clearly shown as in this paper.

Another thing; the last paper presented covering the results at Purdue University two years ago tried to make an explanation as to where we shall find greater economy in service than the results at Purdue indicated. The amount of superheat we were using was about 180 to 190 deg. There is quite a considerable drop in coal consumption between the amount of superheat obtained on the Cole locomotive at Schenectady and the one we were using, and it fairly well accounts for the results which we told you about.

I do not think that superheating needs any more advocacy on the part of the Canadian Pacific. We think it is doing very well, and we have not changed our policy, except that we are going to follow the example set in the United States and equip our engines so that we will obtain a higher degree of superheat than has been obtained in the past.

H. T. Bentley (C. & N. W.): It may be of interest to the members to know that we have just conducted a series of tests with superheaters and saturated steam engines, and that the results obtained compare very favorably with the test results obtained on the testing plant. On our Chicago-to-Elroy run we had two superheated steam engines and two saturated steam engines, and we put them on that test, and it was found that there was an average economy of 25 per cent. in fuel consumed in favor of the superheated engine. This was not while the engine was standing still, or while being fired, but while the engine was in actual service.

As explained by Mr. Vaughan, the harder you work an engine equipped with superheaters the greater the economy. We found that very true. We made some tests on other engines out in Iowa, and we obtained practically the same results there. Our men feel that they have got the best engines that they ever had in the superheated engines. The superintendent and everybody concerned cannot say too much for them. We put two lubricators on those engines at first, but we had trouble with one, with the left valve cutting out, and we took that lubricator off and put a larger lubricator on in front of the engineer, on the right side, and then that trouble was nearly eliminated. I think any railway man who has not had a superheater, and once gets it, will be astonished at the results to be derived from it.

C. D. Young (Penna.): There are two questions that have come up in my mind, concerning which I would like to have information. It is my understanding, from the results of the test at Purdue, the conclusion was reached that it was preferable from the standpoint of economy to have steam pressure at from 160 to 170 lbs., that conclusion being based on the eighty and 160 deg. superheat.

Now, referring to Fig. 7, giving the superheat in degrees per horse power per hour. I notice that with the 240 deg. the lines 1, 2 and 3 are coming very close together, and I would judge that if there was sufficient data for all of the intermediate points that probably line 3 and line 1 would intersect at about 280 deg.; in other words, as you increase the superheat effect, it looks as though you could run your boiler pressure up. That would seem to indicate that we could use the superheat to greater advantage than formerly, as was brought out by Professor Goss's paper, for the reason that it is very difficult to get larger cylinders on some of these engines. On the passenger engines it is very difficult to get much larger than a 27-inch cylinder. If we can hold down the size of the cylinder I think we can get the larger economy that Professor Goss says was obtainable with only 160 deg. of superheat.

I would like to ask Mr. Endsley, then, if, in his opinion, any change should be made in the original position taken, whether it is preferable to use this 160 or 170 deg. steam pressure for the boiler when using superheat.

J. F. DeVoy (C. M. & S. P.): We were asked to take one of our engines equipped with a Schmidt superheater, and make a very extensive test with it. While the test agres very closely with this paper, still I want to give you what we obtained. We obtained about 200 deg. of superheat as an average for the entire test. The boiler pressure averaged about 117 lbs. The water rate was 21.54 lbs. per indicated horsepower. Now, I am giving you something that I do not believe is perhaps advisable, still I am going to tell you just exactly what we did obtain. Over the division the average of our coal performance of the simple engine—the non-superheater engine—burned 18.4 lbs. per hundred ton mile. The consumption in case of the superheater engine showed that the average was 13.34 lbs., or a saving of 35 per cent in favor of the superheater. I want you to understand, though, that the engine equipped with the superheater was just out of the shop and in good condition, and the average was the division average of approximately 100 engines. So I would not say that that 35 per cent would bear out on the whole proposition. It is my opinion without any re-equipping or rebuilding of a simple engine of that type, especially one in which the boiler capacity is somewhat limited, that you can reasonably expect to get a saving in fuel of at least 25 per cent.

Another very interesting feature which was shown by the dynamometer car, which accompanied the test at all times, was that we were able to haul from 150 to 300 tons more freight, more or less, with the superheater engine than we were with the non-superheater engine, so I think the results obtained bear out the statements expressed in the Purdue University paper. If you have an old engine in which the boiler is somewhat small, you can reasonably expect to get a little higher efficiency, due to the fact that the action of the steam in the cylinder is somewhat different from that in the non-superheating engine. It appears that the engine holds her feet better, as we say—that is, she does not slip—and she hauls a load a little bit easier over the hills than the non-superheater engine.

Professor Endsley: I can answer Mr. Young's question by saying that other things were taken into consideration besides efficiency. It was injector trouble and boiler maintenance. As the actual fig-

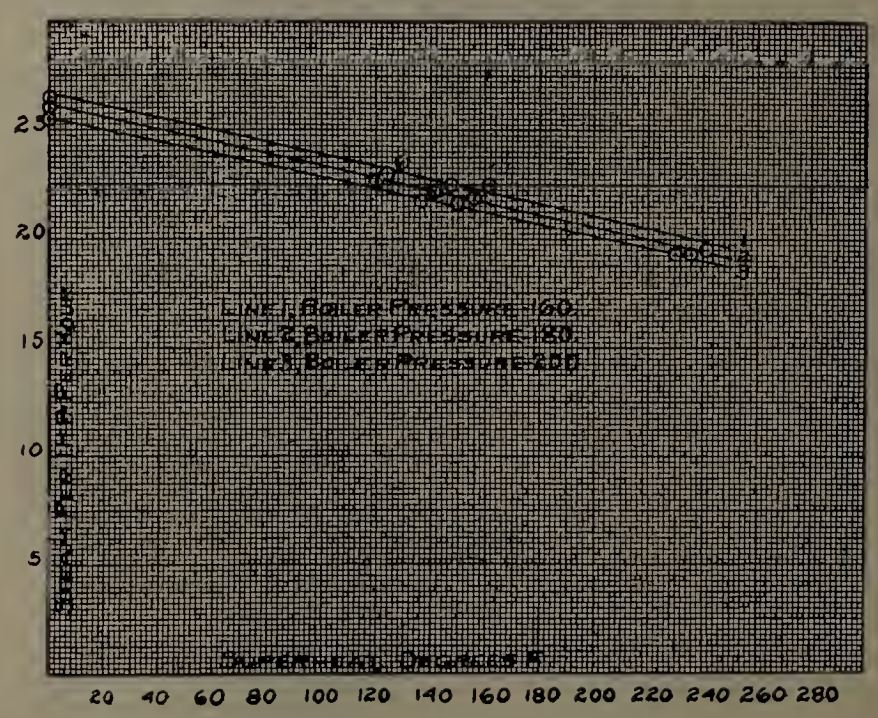

Fig. 6—Steam per I. H. P. for Different Boiler Pressures, Schmidt Superheater.

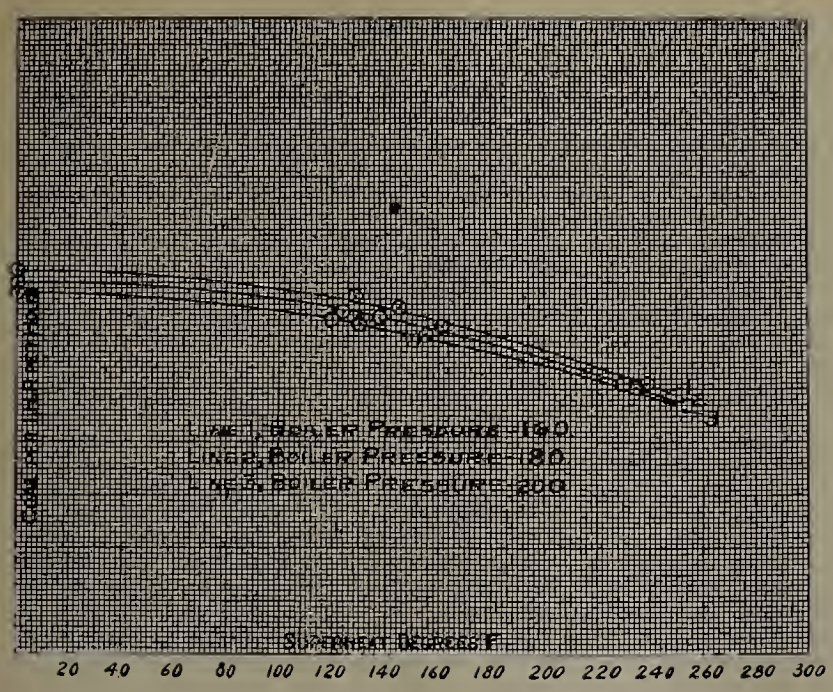

Fig. 7—Coal per I. H. P. for Different Boiler Pressures, Schmidt Superheater.

ures show a greater efficiency at 220 deg. pressure, that was greater than with saturated steam. It also follows down with 160 deg. and 200 deg. exactly to the point of all those tests. So I do not think it makes any difference whether you run 160 deg. or 200 deg. I might say that we have never yet taken up the question of increasing power by adding superheat. We are going to do that next year. What we have attempted to do so far is to run along on all the different degrees of superheat with the same power as nearly as we could get it.

The saving shown in this paper is a saving for the same power and a saving in coal, doing the same work exactly. Next year I may say that we hope to increase the power about 25 per cent. This year we are only depending on our small fire-box engine, having about 87 lbs. per sq. ft. of grate area, which is very low for that kind of an engine, and we can get up easily to 125 lbs. per sq. ft. of grate area. As to Professor Wood's comment, I will say that we have not in any way taken up the maintenance of the boiler or the other things which are necessary when figuring the exact efficiency. We have simply compared the coal used per indicated horsepower; that is all. The work which could be done will no doubt be carried on by some of the railways, when they can figure out the difference in cost for maintaining the superheater; but that is a question which the laboratory is not able to take care of, because we only have one engine and our repairs are not very numerous, and we have no method of keeping track of the cost of repairs in our shop.

FRIDAY, JUNE 16, 1911.

Safety Appliances.

The committee on safety appliances has carefully considered this important subject in the limited amount of time that it has had since the issuance of the order of the Interstate Commerce Commission in the matter of United States Safety Appliance Standards, dated March 13, 1911, which is a modification of the original order issued October 13, 1910. The United States Safety Appliance Standards prescribed in the Interstate Commerce Commission's order of March 13, 1911, must be applied to all equipment built on or after July 1, 1911. As to applying the United States Safety Appliance Standards prescribed in the Interstate Commerce Commission's order of March 13, 1911, to equipment built prior to July 1, 1911, the order of the commission prescribes the following:

"Carriers are granted an extension of one year from July 1, 1911, to change switching locomotives to comply with the standards prescribed in said order.

"Carriers are granted an extension of two years from July 1, 1911, to change all locomotives of other classes to comply with the standards prescribed in said order."

The committee then inclosed the standards prescribed by the commission, with which railway men are already familiar.

The matter of appending to this report drawings or cuts showing the manner of application of these safety appliances was considered by the committee, but owing to the various local conditions and practices to be met by the various railways of the country in applying these standards, and also to the limited amount of time in which to gather the requisite information since the issuance of the final order of the Interstate Commerce Commission, the committee has not prepared drawings or cuts.

The report is signed by: Theo. H. Curtis (L. & N.), chairman; M. K. Barnum (I. C.) and C. B. Young (C., B. & Q.).

Mr. Curtis (chairman of committee): Referring to the Interstate Commerce Commission standards for steam locomotives in road service and the location of the sill steps, there have been a great many questions asked as to where the roads are going to place this sill step. The order is very plain that it must be outside of the rail, and not over 16 in. above it. It may be placed on the face of the bumper beam, or it may be placed on the rear of the bumper beam, or it may be placed on the pilot; so long as it is outside of the rail and not over 16 in. above the rail, it complies with the law. There are some railways that use this step entirely, where the clearance will permit it, on the rear of the bumper beam. Other railways use it and have the same attached to the pilot. Some are applying it on the face of the bumper beam. I wish to call your attention to the fact that this sill-step is to have a metal tread 8 in. by 10 in. It says it also may have a wooden tread. My interpretation of this is that sill step must have a metal tread. If you wish to put a wooden tread on top of it you can.

The pilot beam handholds and rear-end handholes for steam locomotives in road service are to be ⅝ in. in diameter with a minimum clear length of 14 in., preferably 16 in., and minimum clearance of 2½ in. The end handhold for steam locomotives used in switching service must be 1 in. in diameter, with 4-in. clearance, except at coupler casting or braces, when minimum clearances shall be 2 in. Under the location we learn that this handhold shall extend across the front end of the locomotive, in the rear of the tender. You will note that the road engine has a different handhold from the switch engine. There is nothing said in the order as to when the road engine becomes a switch engine, but it is reasonable to understand that a road engine could not switch too long and not become a switch engine; therefore it becomes almost necessary to equip your road engine as a switch engine in order that you may transfer a road engine to switch engine service. The handholds on a switch engine would be permissible on a road engine, but the handholds on a road engine would not be permissible on a switch engine.

The important feature of the end clearance is the 14 in. from the vertical plane passing through the inside face of knuckle when closed with the horn of coupler against buffer block or end sill. There are exemptions made for air hose, steam hose and different appliances, but there are no exemptions made for bolt heads, rivets or push pole pockets. Therefore the matter stands about like this: There are 14 in. required by law; about half an inch will have to be added for contingencies, 3 in. will need to be added for push pole pockets and other parts of the tender that are not exempt, and 2 to 3 in. clearance must be added for compression of the spring, making a total distance of about 20½ in. from the end sill to the inside of the knuckle. Now, this is a very long overhang to maintain on a switch engine. Especially is this so when it is required on a switch engine, and a road engine may be made a switch engine almost momentarily. So it becomes practically necessary to equip a road engine with a very long distance between the knuckle and the end sill. With this long overhang, or distance, we begin to have some more trouble. The uncoupling lever arm will be very long, it may be 15 to 18 in. long. In fact, it is so long that it is very hard to lift the knuckle. This uncoupling apparatus must extend near the full width of the tende there is very little allowance left. There is nothing said in the law as to the length of the arm on the outer end of the uncoupling lever as it applies to locomotives, but there is as applied to cars. It is open to reasonable interpretation that this lever must not be too long. If it is too long, when the trainman on one side of the tender or pilot raises the uncoupling lever the long handle will stick out on the other side and perhaps injure a fellow-trainman.

These difficulties must needs be obviated after a very careful study of this safety appliance question and after, I might say, a conference of your best men in an endeavor to ascertain how it can be applied to your locomotives. I have held several of these conferences with the officials of the road with which I am connected, and we feel that we have learned a great deal about the application of safety appliances, but we believe there is still much more to learn.

Discussion of Safety Appliances.

The President: A serious question in connection with this subject is the length of the draw bar head to obtain the 14-in. clearance, especially on the rear of the tender where you have been using the M. C. B. standard coupler. You have either got to lengthen out the head, or you have got to move the draw bar and draft rigging out, and I think we ought to arrive at an understanding of the best method of taking care of this clearance, with as few couplers as possible. In interchange work, this question does not enter into that, but there is no necessity of perpetuating a dozen couplers if two or three will answer the purpose.

W. E. Dunham (C. & N. W.): The Committee on Standards of the M. C. B. Association had this matter under consideration, and the committee was informed that a Special Coupler Committee of the M. C. B. Association was figuring on a longer head to take care of this clearance.

G. W. Wildin (N. Y., N. H. & H.): That is what the Coupler Committee will report at the Association meeting next week, and I think that whatever action is taken by that association will apply so far as the length of the coupler is concerned to the switching locomotive as well as the cars. The only thing that is troubling the committee is to get some idea as to how many standards will be necessary. We have not been able to get the information from the various roads as to their clearances. Until we do have that information we shall be unable to sum up and say how many standards there will necessarily be.

C. A. Seley (C., R. I. & P.): In regard to fitting up of our equipments to meet these requirements, my thought is that the switch engines should be considered first, for the reason we must have them equipped within a year, to comply with the law; and then comes about the idea that road engines are used in switching service very extensively, and while we have two years on them, we ought not to neglect the thought that possibly switch engines and road engines should have the same equipment. I am referring to the end handholds particularly. Probably what we shall do will be to put stands on the ends of the buffer beams 6 in. apart to receive a piped handhold pinned to these stands,

with an opening in the center for the uncoupling frame, and have the uncoupling lever inside the pipe. It makes a very neat arrangement. So far as I can construe the law it will fulfill the law. It is applicable both to switch and road engines, and so far as we had the thing figured out when I came away, that is about where it will land if we do not change our mind. That is my thought up to the present time. The fitting up of road engines so as not to make a violation under the heading which is used in these rules, not "switching engines," but engines used in switching service, is pretty broad, and I do not know whether we could plead temporarily as a bar to that, so I think it is very important, indeed, that the road engines be fitted up on the switch engine lines in so far as handholds and clearances are concerned. We have found considerable advantage in our design of front ends of switchers on account of having a tapered buffer beam, that is a bowed front, which gives us better clearance out where the man stands in relation to the coupler lengths than where you have a straight design.

J. H. Manning (D. & H.): I think it would be a serious mistake on the part of this association to introduce another M. C. B. coupler to take care of the end clearance on locomotives as well as cars. I think there is no doubt but that the yoke can be lengthened out and the filler put in to meet all requirements. We do it now. Where the springs are used or friction gear, the yoke can be lengthened, and where the nigger head is fastened onto the back of the end sill, a liner can be put behind it. I do not think that what we do with that matter will have much practical effect, so far as the locomotive ends are concerned. The chances are that each road will adopt its own ideas in complying with the law. I presume the Committee on Standards of the M. C. B. Association will have something to say as to how to meet the conditions on the cars.

Mr. Seley: I might have added it is our intention in a number of designs to put in a filler and lengthen out in that way.

Oliver C. Cromwell (B. & O.): I believe it is advisable to keep down the number of couplers which are used on our wooden tender frames. I do not see how it is going to be possible to use our M. C. B. type coupler without cutting away the end sills entirely. You will have to fill it out to give the end ladder clearances. You might take care of that on a steel underframe, but when you come to a wooden one, you will not be able to solve it, as I can see, in that way. I am afraid we will have to look towards making a longer shank, but the draw bars will not have sufficient support to hold up the coupler, if we carry our carrier out towards the coupler. I did not realize it would require quite so much over hand as the chairman has shown us. We can take care of that part on the new locomotive, but the older ones are those which will give us trouble. I would like to add to the remarks of Mr. Seley that it would be of great importance to fit out both the freight and the switcher locomotive tenders in the same way because they do get into the same service. I believe we are all here willing to listen to suggestions on this matter, because we have not had much time to solve the problem as yet. I believe it would be well if this subject was thoroughly threshed out on the floor.

Mr. Curtis: In regard to the coupler, whether the head shall be made longer or the shanks shall be made longer, I have had considerable experience so far in this matter. We have endeavored to keep the switch engine with the M. C. B. coupler. with the 9 in. head; that is, 9 in. from the coupler horn to the inside face of the knuckle. It required 8½ in. in the buffer block to hold the coupler up. We had to cut the end sill nearly in two to get the yoke of the coupler to come up far enough to allow any action of the spring; and when we looked upon our work we were not satisfied with it, it did not look well. Then we purchased a coupler that had a head 13½ in. from the coupler horn to the inside face of the knuckle. It is the cheapest way to handle the subject. This head was placed in the tender without any change whatever except removing the old M. C. B. coupler and applying a new coupler without a name. This coupler looks bad; the overhang is immense to a man that is accustomed to a close coupled engine, but of the two I think the change of the coupler is by far the better. I take this view from the experience I have had in having equipped engines both ways.

F. C. Chambers (C. of N. J.): With reference to the push pole pocket, I would say that there is a way of getting around that, namely, the pocket may be depressed so that it will be flush with the sill. On wooden end sills we have fitted up a few that were depressed, and have put in simply a steel plate forming a pocket in it, which was only ⅝ in. outside of the face of the sill. We took up the matter directly with the Interstate Commerce Commission about the curve line of the uncoupling handle, which stuck out, say, 4 in. They passed upon that as not being a matter considered in the Act, but that it was taken in the exception that was made with respect to the coupling lever arm. We had a cast iron push pole pocket on the same end sill that did not stick out as far as this coupler handle did, but I did not bring that before the commission; I thought I would wait a little while, as I did not care to take it up with them, although I could not see what difference it made when it was outside of the handle, and both were outside of the step on the rear. My idea was that they would not accept that exception. By countersinking a push pole pocket in the end sill 3½ to 4 in. of that overhand can be eliminated, and it is the overhang, as mentioned by Mr. Seley, that would be decidedly objectionable.

Mr. Seley: The special committee which has had to do with the handling of these matters to a considerable extent, and also the conference committee, composed of members of this association, have been discharged in so far as any connection with the legislation end of the matter is concerned. It is now up to this association, as you probably noticed in the president's address, to take care of the details, the technical matters. I do not know how the executive committee can handle that matter, but I can see how members can make it pretty hard for the fellows who are on that committee to try and interpret the law. Try to interpret the law for yourselves; do not ask somebody else to do it. I hope our membership will realize the burden that has been put, and possibly may be put, on any one who has to do with handling matters of this kind, and lighten it as much as possible by not asking such general questions.

W. E. Dunham (C. & N. W.): In connection with this 8 in. x 10 in. length of step, I would inquire whether that refers to the shape of the step crosswise of the truck or lengthwise of the truck?

Mr. Curtis: The step can be put on either way so long as it is 8 in. x 10 in. The ladder may be placed anywhere on the rear of the tender. At the conference with the inspectors at Washington that matter was discussed, and it was thought preferable to have it at the side of the tender, so that it would not interfere with a man going up the ladder when the tender was coupled to a car that had a vestibule. A tender does not require a hand brake when coupled to a locomotive, but if you ship that tender in a train then it will be necessary to put a hand brake on it, as it then becomes a car: you will notice that a variation of 5 per cent. is allowed for manufacture and wear. This must not be taken as a permission to reduce the size of the material when applied to the minimum. That is, when it calls for a ⅝-in. handhold bar, iron nominally ⅝ in. diameter could be used. You should not use a bar, however, that is 5 per cent under ⅝ in. If you do so, as soon as there is any wear upon it you are subject to the fine for operating a locomotive with a safety appliance under the size prescribed by law.

Design, Construction and Inspection of Locomotive Boilers.

C. A. Seley (chairman of committee): The committee is unable to present a written report on account of the late date of the promulgation by the commission of the boiler inspection rules.

Last year, due to legislation in Congress, it was thought wise for the association to put itself on record, so far as it could out of convention, in regard to getting out a set of rules covering minimum requirements of boiler inspection. The committee met and got out such a set of rules, and sent them out in a circular dated September 8, 1910.

These rules were submitted to the membership. They concluded with a request for an informal ballot to get the mind of the association, and they were carried practically unanimously, the negative votes being insignificant in number. These rules were brought to the notice of those handling the legislation, and, after the law had been passed the railways were invited by the chief boiler inspector to send representatives to a conference at Washington to discuss the matter of the rules, and a conference committee of mechanical officers—appointed as a sub-committee of the Special Committee on Relations of Railway Operation to Legislation—discussed the matter with the inspectors and the representatives of the employes, arriving at a set of rules with which you are probably familiar through Bulletin No. 17 of the Special Committee. Those rules were revised and finally acted upon at a hearing before the Interstate Commerce Commission on May 29 and were issued, with the ruling of the Commission, under date of June 2, 1911, and they have been distributed to the railways.

This ruling of the Commission and the rules which have been materially changed from those in the above-named Bulletin No. 17, are given as follows:

Rules for Boiler Inspection.

Whereas the fifth section of the act of Congress approved February 17, 1911, entitled "An act to promote the safety of employes and travelers upon railroads by compelling common carriers engaged in interstate commerce to equip their locomotives with safe and suitable boilers and appurtenances thereto," provides, among other things, "that each carrier subject to this act shall file its rules and instructions for the inspection of locomotive boilers with the chief inspector within three months after the approval of this act, and after hearing and approval by the Interstate Commerce Comission, such rules and instructions, with such modifications as the commission requires, shall be obligatory upon such carrier: Provided, however, That if any carrier subject to this act shall fail to file its rules and instructions the chief inspector shall prepare rules and instructions not inconsistent herewith for the inspection of locomotive boilers, to be observed by such carrier; which rules and instructions being approved by the Interstate Commerce Commission, and a copy thereof being served on the president, general manager, or general superintendent of such carrier, shall be obligatory and a violation thereof punished as hereinafter provided;" and

Whereas at the expiration of the period of three months after the approval of said act many of the common carriers subject to the provisions thereof had failed to file their rules and instructions for the inspection of locomotive boilers with the chief inspector; and

Whereas the chief inspector thereupon proceeded to prepare for submission to the Interstate Commerce Commission for its approval rules and instructions for the inspection and testing of locomotive boilers and their appurtenances for such carriers so failing to file the same; and

Whereas upon due notice there came on a hearing before the Interstate Commerce Commission in the matter of the approval and establishment of the rules and instructions prepared by the said chief inspector, on the 29th day of May, 1911; and

Whereas such carriers as had filed their rules and instructions

for the inspection and testing of locomotive boilers and their appurtenances with the chief inspector within three months after the passage of said act asked, through their representatives at said hearing, that such of said rules and instructions which did not fulfill the requirements of the proposed rules and instructions prepared by the chief inspector be modified to the extent necessary to conform thereto, and that such of said rules and instructions as prescribed a higher standard than that required by the rules and instructions prepared by the chief inspector be regarded as withdrawn from consideration, and joined in a request that such rules and regulations as had been prepared by the chief inspector and approved by the Interstate Commerce Commission be established with uniformity for them and all other carriers subject to the act; and

Whereas at the hearing aforesaid the rules and instructions prepared by the chief inspector were submitted to the Commission for its approval and all parties appearing at said hearing were fully heard in respect to the matters involved, and said proposed rules and instructions having been fully considered by the Commission:

It is ordered, That said rules and instructions for the inspection and testing of locomotive boilers and their appurtenances, as follows, be, and the same are hereby, approved, and from and after the 1st day of July, 1911, shall be observed by each and every common carrier subject to the provisions of the act of Congress aforesaid as the minimum requirements: Provided, That nothing herein contained shall be construed as prohibiting any carrier from enforcing additional rules and instructions not inconsistent with the foregoing, tending to a greater degree of precaution against accidents:

Flues to be removed.—All flues of boilers in service, except as otherwise provided, shall be removed at least once every three years, and a thorough examination shall be made of the entire interior of the boiler. After flues are taken out the inside of the boiler must have the scale removed and be thoroughly cleaned. This period for the removal of flues may be extended upon application if an investigation shows that conditions warrant it.

Method of testing rigid bolts.—The inspector must tap each bolt and determine the broken bolts from the sound or the vibration of the sheet. If stay-bolt tests are made when the boiler is filled with water, there must be not less than 50 pounds' pressure on the boiler. Should the boiler not be under pressure, the test may be made after draining all water from the boiler, in which case the vibration of the sheet will indicate any unsoundness. The latter test is preferable.

Flue plugs.—Flue plugs must be provided with a hole through the center not less than three-fourths inch in diameter. When one or more tubes are plugged at both ends the plugs must be tied together by means of a rod not less than five-eighths inch in diameter. Flue plugs must be removed and flues repaired at the first point where such repairs can properly be made.

Leaks under lagging.—If a serious leak develops under the lagging an examination must be made and the leak located. If the leak is found to be due to a crack in the shell or to any other defect which may reduce safety, the boiler must be taken out of service at once, thoroughly repaired, and reported to be in satisfactory condition before it is returned to service.

The order is pretty clear. Without having had any legal advice in the matter I will say that as I understand it the railways that have filed rules have withdrawn them, and all the railways in the country will work under the set of rules which are attached to the order. In our own case we will make these rules supplement the rules of the railways for a reason which will appear later. The changes in the rules which are issued with the order, as compared with those which were handed to the commission at the hearing, are in the arrangement of the rules in regard to the numbering of them; there are two minor changes in the wording, and one change in the arrangement, the Accident Report Rule being moved from its location in the former set of rules. None of these are, I believe, objectionable.

The order of the Commission includes copies of the report forms. It is desired that the railways print their copies of the monthly and annual reports of the identical size and the same arrangement as in the samples in order to have a similarity of reports for convenience of filing. There is no size given for the Quarterly Inspection Report or Cab Card. A number of us, however, are of the opinion that it is desirable to print it half the size of the other standard reports, which are 6 in. x 9 in., and half of that would be 4½ in. x 6 in. Some of our Chicago roads are working towards a standard card holder, so as to get it a matter of commercial manufacture in large quantities and at cheaper prices. The report also includes a Specification Card for locomotives, which will keep our mechanical engineers busy figuring out the dimensions and the strengths of present locomotives. The order concludes with a copy of the law.

Rule 12 reads as follows: "Any boiler developing cracks in the barrel shall be taken out of service at once, thoroughly repaired, and reported to be in satisfactory condition before it is returned to service."

As I would interpret that rule: These reports are our own, and we are not required to report repairs to the inspectors.

Testing Boilers: Rules 17 to 20. These rules cover the annual test, and there are a great many items in the report which have to be filled in.

The monthly and the annual forms of reports have diagrams on their backs for filling in as to defective stay-bolts, but these are only the bolts which are allowed to run; therefore, any railway which desires to have a complete record of its stay-bolts will have to maintain its present boiler inspection forms, provided such forms carry with them diagrams of the broken stay-bolts. In our own case we will retain our Rock Island form and do our work just the same as we have heretofore, supplementing it with the Government requirements.

Discussion on Design, Construction and Inspection of Locomotive Boilers.

J. F. Enright (D. & R. G.): It is my understanding that the quarterly card that is posted in the cab is not a sworn statement, simply a monthly report, so that if the quarterly card is adopted, and which I think by all means should be adopted for the cabs, they would be used simply with the signature of the party who took care of the gage cocks and water glasses and the inspector who looked after the boiler, so that there should be no delay to power on account of this card for the cab. The quarterly card should be used, in my opinion, but it is not a sworn statement.

F. C. Cleaver (Rutland): I ask if it is necessary to have second card pocket in the cab for the Federal card? Does the Federal Law specifically state that this card must be exposed? It has been suggested that we could carry two cards in one pocket. I would like some information on that subject. In New York State we have to carry a card. Now, can we have the Federal card in the pocket we already have—the pocket which has been provided for the New York State card?

D. R. MacBain (L. S. & M. S.): It is our intention in New York and Pennsylvania to put both cards in the same holder. We have it arranged now so that all these cards referring to the states of New York, Ohio and Pennsylvania shall go into one holder, and we intend to put them and the Federal card in the same holder.

J. H. Manning (D. & H.): How is Mr. MacBain going to keep the cards exposed, if he puts them all in one pocket? The law of the state of New York and the federal law requires them to be under glass, exposed——

Mr. MacBain: The inspector can pull the cards out and inspect them.

Mr. Manning: I would like to hear Mr. Robinson on that matter. My understanding is that the New York state law called for one pocket and the federal law called for another, and both cards should be exposed, so you can stand on the deck and read them. If I am wrong I want to find it out.

Mr. Cleaver: I looked that up carefully, and I think the federal law does not state that the card shall be read through the glass; it simply states that the card shall be under glass. Apparently, you can turn it wrong side out, as far as I understand the federal law.

E. A. Miller (N. Y. C. & St. L.): I would like to ask Mr. Seley if the stay-bolt chart shown on the back of the federal report is to be filled out in case the broken stay-bolts are replaced before the chart is made out for the government. That will make quite a difference, as to whether we should show these broken stay-bolts on this chart, or whether the showing of these stay-bolts is eliminated from the chart, except in cases where they are allowed to run in a broken condition.

The time is also getting very short within which we can put this in operation, between now and July 1, getting our blanks prepared and ready to meet that work. As I understand, the law goes into effect the first of this coming month.

M. E. Wells (W. & L. E.): I have had considerable anxiety about the same point that Mr. Miller speaks of, that is the monthly report, and I was under the impression at first that the report had to be filed in the cab every month, and I am very happy to learn that it is only the quarterly report that has to be filed in the cab—the monthly report is simply made out and forwarded to the District Inspector.

J. F. Enright (D. & R. G.): Would it not be well for Mr. Seley to give a definition of flue plug for the benefit of the gentlemen who meet with bad water? I understand a definition was obtained from the chief inspector and others at a meeting the subcommittee had with them May 27th last.

M. H. Haig (A. T. & S. F.): I may have misunderstood something. In that first list that Mr. Seley sent out for securing information I noted a reference for cleaning out water glass cocks and gage cocks every time the boilers were washed. In some districts it is necessary to wash boilers every round trip, but I do not think it would be necessary to clean out the cocks so frequently. I would appreciate some information on that before the subject is closed.

Mr. Wells: I will say for the benefit of the gentleman, all that means is to know that they are open, which you want to know anyhow. It does not mean they shall be cleaned if they do not need cleaning. It means that you shall know that they are open and free.

R. D. Smith (B. & A.): I'm going to correct Mr. Wells. That means, and the law specifically states, that the gage cocks and water glass cocks must be cleaned, and the law goes on to state how they shall be cleaned and reported. We have not had any trouble whatever in carrying out this law, which is practically the same as the one in New York State under which we are operating. As I read this law we will be obliged to have the certificates in the cab under glass, the same way that we now carry the certificate of the New York State inspection. It would seem to me, and I hope that some time action will be taken by this Association to that end, that it would be a good thing in some way to have the federal laws supersede the state laws.

Our round house clerks are notaries public and the inspectors go before them and make out their inspection reports, and they are sworn to and forwarded in the regular way. This is not done at one time, but it is a continuous performance. It goes on daily, and it goes on at night as well as in the day time. In engine houses where we have a large number of engines the night clerks are notaries as well as the day clerks. The copy of the law

did not reach my desk until just as I was leaving the office, and I am not familiar with the time which we are to be given to fill out the specification cards for boilers. Of course, those of us who have had engines running in the State of New York can get copies of those specification cards, which will make very much less work than stated by Mr. Seley is necessary, but I do not know how much time we have in which to file these cards.

D. F. Crawford (Penna.): I think we should do everything possible and in good faith, co-operating and assisting the federal inspectors and the state inspectors as far as we can. I should say for the present, put all the cards necessary in the cab, exposing them, they are put there to assist the inspector. Let him go on and see that the engine has been inspected within the proper time. I feel all here can do a great deal with the gentlemen on the various State Commissions to get them to adopt and use, or permit the use of, a Federal quarterly inspection card as covering the whole situation, the reports to be sent to the Commission as may be decided by our various Legal Departments. We have had a little experience along that line, in that the form promulgated by the Pennsylvania Commission differed slightly from the form put out by the Ohio Commission, and the Pennsylvania and Ohio reports also differed slightly from that of the New York Commission. Representatives of the three Commissions have met at some place, and have agreed that the form that we use shall be used by the Commission. The form in question reads: "This boiler has been inspected in accordance with the requirements of the States of New York, Pennsylvania and Ohio." That one form answers the purpose. I believe we could present this matter to the various State Commissions in such a form that would assist us in simplifying the work as much as possible, and I think it is distinctly up to us to co-operate with both the State and Federal Commissions to carry out this work.

Mr. Seley: As regards the size of the cab card, would say there has been nothing done definitely in this matter by us in Chicago except to consider a size one-half the size of the monthly and annual reports, which would give us a card 4½ in. x 6 in. I am advised that 4½ in. x 6 in. is not a standard paper size; 3½ in. x 5½ in. is postal size, and 3 in. x 5 in. is library size. Inasmuch as the amount of printing to be done on the card could readily be shown on one of these smaller sizes, further consideration may lead us to adopt one or the other of them. As regards the design of the car holder, would say that we have considered a pressed steel affair, that is fastened up in the cab, has guides on each side and stops at the bottom, and is open at the top. Into that is dropped another case, which holds the card, also of pressed steel, with a glass front and a couple of clips at the back, to press the card tightly against the glass, and keep the dirt and moisture out of the case.

That being dropped down into the holder makes a very neat arrangement, and if you should run in territory where you might be afraid of malicious interference and trouble with the maintenance of the card it is an easy matter to secure a piece of molding over the top of the case, so that the card could not be removed without the removal of the molding. That is a matter of detail which almost anybody can take care of. As regards the oath by the officers, I doubt very much if we can get away from the notarial requirements, as the law requires these reports to be under oath. That is really a matter for our Legal Departments rather than for us to handle.

I would strongly urge the use of the quarterly card for the cab card. It is true the rules will permit the filing of a monthly inspection report as a permissive card for operating the locomotive, but that involves a case 6 in. x 9 in. I think you will agree with me that is too large a case to put in a cab. Regarding the stay-bolt chart, would say for Mr. Miller's information that the reports state very plainly that the location of broken stay and crown bolts which were not renewed must be indicated on the diagram, that any bolts which are renewed are not shown on the diagram, so that any bolts which are renewed are not shown on the diagram. The report is to indicate the condition of the engine when it goes into service after inspection, but not what its condition was before that inspection. The condition of your stay-bolts will have to be mapped out on your own forms if you wish a complete history regarding them.

Regarding the flue plug matter, would say that I wrote to the Chief Inspector for an interpretation and I received the following reply: "Inasmuch as the rules do not prohibit the use of thimbles, I think it is a matter in which the railways must use their own discretion in regard to their use. However, I think the indiscriminate use of thimbles should be discouraged, and they should only be used when the bearing is in good condition and the thimbles are properly applied." As I understand the matter, the flue plug as stated in the rule is a plug having a hole through the center not less than ¾ in. in diameter; solid plugs are not allowed. If that hole is larger than ¾ in., reasonably larger, say 1 in. or 1¼ in., it would be construed as a thimble, but they wish to discourage the use of them to the greatest possible extent, and I think that is desirable.

The cleaning of water glasses and gage cocks is a little mixed. Rule 39 reads as follows: "The spindles of all gage cocks and water glass cocks shall be removed and cocks thoroughly cleaned of scale and sediment at least once each month." Now, if you will turn to Rule 48, which is the office record, it reads as follows: "An accurate record of all locomotive boiler washouts shall be kept in the office of the railway company. The following information must be entered on the day the boiler is washed: (a) Number of locomotive; (b) Date of washout; (c) Signature of boiler washer or inspector; (d) Statement that spindle gage cocks and water glass cocks were removed and cocks cleaned; (e) Signature of the boiler inspector or the employee who removed the spindles and cleaned the cocks."

Inasmuch as much weight is given to getting these statements and signatures, I should be inclined to construe that every time you wash a boiler out you ought to do the other, although it says in Rule 39 "once a month," which might be answered in this way: In many sections of the country, where the water conditions are so very good, you would not wash out more than once a month. To fulfill the requirements the rule would secure the cleaning of these cocks at that same time.

As regards the filing of specification cards, I will say that we have a two-year period in which to file cards, although, if we have definite information in the office available, the rule says file them at once or as soon as you can prepare them, but there is little information, and the specification card has to be made up from an actual inspection of the boilers, and to cover a large number of old engines, we have two years from July 1. All boilers built after January 1 next must have a factor of safety of at least 4. That time was given so as to enable pending contracts to be filled and deliveries of locomotives to be made, and will give us ample time to check over and change our standard specifications and drawings so that in our new equipment after January 1 next we will have a factor of not less than 4.

The President suggests that we take up a little more time in regard to this washing-out matter. On the monthly locomotive boiler inspection and repair report question 3 reads: "Was the boiler washed and gage cock and water glass cock spindles removed and cocks cleaned?" That, of course, will be answered "Yes," or you would be violating the requirement to do it in every 30 days.

Now, as regards your office record, it should be accessible to the Government inspector and for the information of your own office force. I think the right way to do it is to clean these things and have the signatures for every washing, and then, in case anything happens, you have a clear record. You do not have to swear to that: you do not have to get any signatures other than for the purposes of your own office records.

Mr. Crawford: Inasmuch as the Federal Inspection Rules become effective July 1, and we will, therefore, not have time to refer the question of the size of this card to the Committee on Standards, I would move that the Association adopt as recommended practice, at least, the size 3 in. x 5 in., the library card size, which will enable a copy to be kept, if so desired, in your regular card catalogue file. (The motion was put and carried.)

Contour of Tires.

The committee has been instructed to give consideration to the following and make recommendations: The desirability of adopting the M. C. B. standard contour for engine-truck wheels, tender-truck wheels, driving and trailing wheels, also limit of wear of tread, shop and road limit of last turning, maximum height of flange, thickness of flange and gages. As the present standard contour for cast-iron wheels of this association is identical with the 1909 standard of the Master Car Builders' Association, it assumes that the instructions as to contour refer to steel and steel-tired wheels only. Replies to a circular of inquiry indicate that the M. C. B. 1909 contour is being very generally used for engine-truck and tender-truck wheels. Some roads have already adopted this contour for flanged driving-wheel tires as well. The committee feels that this contour is desirable for all flanged wheels under locomotives and tenders for the same reason that it is desirable for car wheels, in addition to which is the feature of uniformity. The present A. R. M. M. A. standards call for six widths of flanged tires, and five widths of plain tires, as follows:

Flanged tires	5 in.	5¼ in.	5½ in.	5¾ in.	6 in.	6¼ in.
Plain tires	6 in.	6¼ in.	6½ in.	6¾ in.	7 in.	

Replies from the manufacturers of steel tires indicate that of the flanged tires manufactured by them, there are practically but two widths, namely, 5½ in. and 5¾ in., the large majority being the former. In the case of plain tires the prevailing widths manufactured are 6 in., 6½ in. and 7 in., there being little demand for the 6¼ in. and the 6¾ in. widths. It is the opinion of the committee that one standard for cast-iron and one for steel and steel-tired flanged wheels, namely, the M. C. B. 1909 standards, and three widths of the present A. R. M. M. A. contour for plain tires will meet all requirements and be to the advantage of all concerned, due to the fewer number of standards.

The prevailing limit of wear of tread or channeling for all wheels under locomotives and tenders is ¼ in. for locomotives in road service and 5-16 in. for locomotives in shifting service, which we feel is good practice. In investigating the subject of limits of wear of driving-wheel tires the committee has found the greatest variation. After full consideration, it does not seem possible, or advisable, to establish a minimum road limit to be followed by all roads. Where long, steep grades necessitate heavy braking, or severe weather conditions result in frozen roadbed for long periods of time, tires cannot be worn to the same degree of thinness as where these conditions do not prevail. Also, the use of retaining rings, which practice, however, is not universal, has a bearing on tire thickness. After consideration of all the data available, the committee feels that the limits prescribed in Fig. 1 submitted as a portion of its recommendations will be suitable for roads not having severe grades, or extremely cold weather, and not using retaining rings. Where these conditions prevail or retaining devices are used, such deviations will have to be made as experience indicates are desirable.

The prevailing practice is to establish the shop limit of thickness of tires ¼ in. above the road limit. This limit is strictly one of economy and not safety, and will vary with the facilities

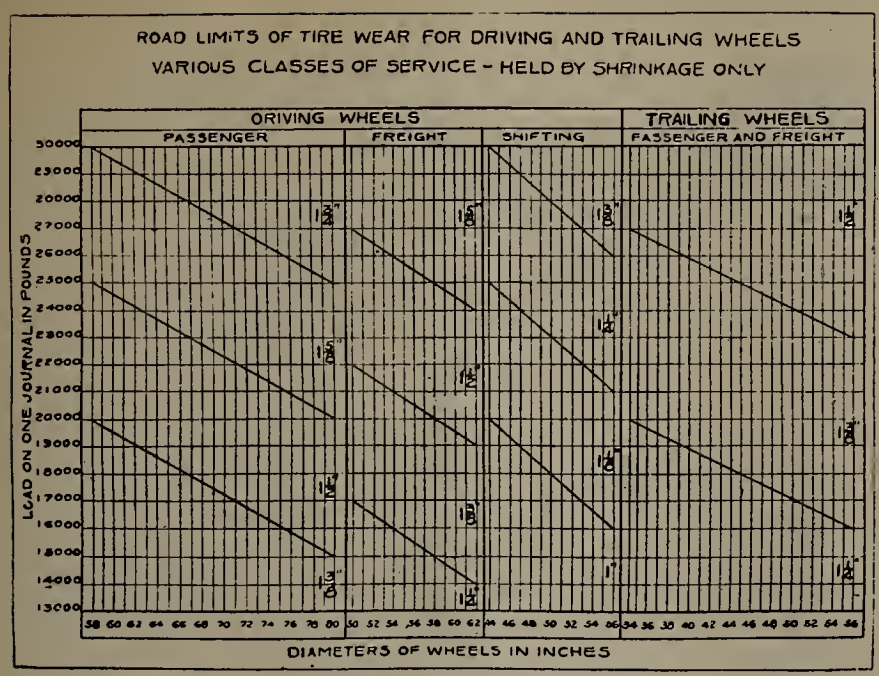

Fig. 1—Tire Wear Limits for Roads Without Severe Grades.

for doing the work. The M. C. B. limit for thickness of tire or rim for steel and steel-tired wheels is being generally followed in the case of engine-truck and tender-truck wheels with satisfactory results, and the committee recommends the same limits be adopted. The M. C. B. Association has already adopted a maximum height for flanges, of 1½ in. This was considered the maximum height flange that would not, in service, damage track bolts, filler blocks, etc. There is no reason why this maximum height should be deviated from. The question of gauges is one in which there is practically no uniformity, each road apparently having gotten up a gage to suit its individual views. Recommendations for a shop or engine house gage on which can be read direct the important dimensions, namely, channeling of tire, height of flange and thickness of tire, are herewith submitted.

It has been suggested that the number of brackets on standard wheel circumference measure be increased from three to four and the length of the brackets increased so as to project ⅛ in. beyond the rim when the brackets are in proper position. The present method of graduating the circumference measure does not provide a definite boundary for each tape size, as the tape sizes are indicated by lines.

It is, therefore, recommended that instead of defining tape sizes by lines they be defined by spaces. The committee is of the opinion that these changes in the size and number of brackets, as well as the markings of the circumference measure, all of which are shown in Fig. 3, are desirable. These same changes are among the recommendations of the standing committee on car wheels to be made to the M. C. B. Association at the 1911 meeting.

Recommendations.

1. The committee recommends the M. C. B. 1909 contour for all flanged steel or steel-tired wheels, as follows:
   a. Engine truck.
   b. Tender truck.
   c. Driving wheels.
   d. Trailing wheels.
2. Plan tires to be of three widths, namely, 6 in., 6½ in. and 7 in., the contour to be the same as the present standards; the widths of 6¼ and 6¾ in. to be eliminated.
3. Limit of wear of tread or channeling to be as follows: ¼ in. for all locomotive and tender wheels in road service; 5-16 in. for all locomotive and tender wheels in shifting service.
4. Road limit for driving and trailing wheels to be as specified in chart.
5. Road limit for steel and steel-tired wheels for engine and tender trucks to be as per the 1909 recommended practice of the M. C. B. Association.
6. Maximum flange height to be 1½ in.
7. Gage to be as per Fig. 2.
8. Wheel circumference measure to be modified as per Fig. 3.

The report is signed by:—W. C. A. Henry (Penn.), chairman; O. C. Cromwell (B. & O.), J. A. Pilcher (N. & W.), O. M. Foster (L. S. & M. S.) and A. C. Adams (N. Y., N. H. & H.).

Discussion on Contour of Tires.

W. F. Dunham (C. & N. W.): I would like to ask if anyone has had any experience particularly with the 1-in. height of driving tire flange, as indicated in this contour. This is the size adopted by the M. C. B. Association for car wheels. It is quite a different proposition when you come to the driving wheel contour to take the same height of the flange.

R. W. Bell (I. C.): We are a little at sea. We have been using 1⅛-in. on our driving wheel and engine truck wheel on high-speed engines, and in fact on all engines. We would like to hear some discussion on that matter and have some of the members who use 1-in. flange on driving wheel and engine truck wheel, particularly in high speed service, relate their experience and what success they have had in operating flanges of that height.

H. T. Bentley (C. & N. W.): I ask the members of the Association if any of them have tried ⅞-in. height of flange for switching service only. It had been recommended to us that we use ⅞-in. flange, so as to decrease the amount of wear on the trucks and increase the life of the tires, and I would ask the members using 1½-in. on our driving wheel and engine truck wheel on of the Association if any of them have used the ⅞-in. flange for switching locomotives only.

F. F. Gaines (C. of Ga.): In reply to Mr. Bentley, will say that I have used that ⅞-in. flange for a long time on several roads, and I have never had any trouble. It gives a good flange, and it gives you a chance to wear the tires down and get more wear before it is necessary to shift them for a high flange.

R. L. Ettenger (Southern): A number of years ago, when I was with the Big 4, we tried some switch engines with ⅞-in. flanges, and they did not stay on the track very well—we had to change them. They were leaving the track a great deal of the time.

Mr. Bell: I might add that that has been our experience. With the ⅞-in. flange we could not keep the switch engines on the track, and we had to discontinue using them.

C. A. Seley (C., R. I. & P.): I really cannot make up my

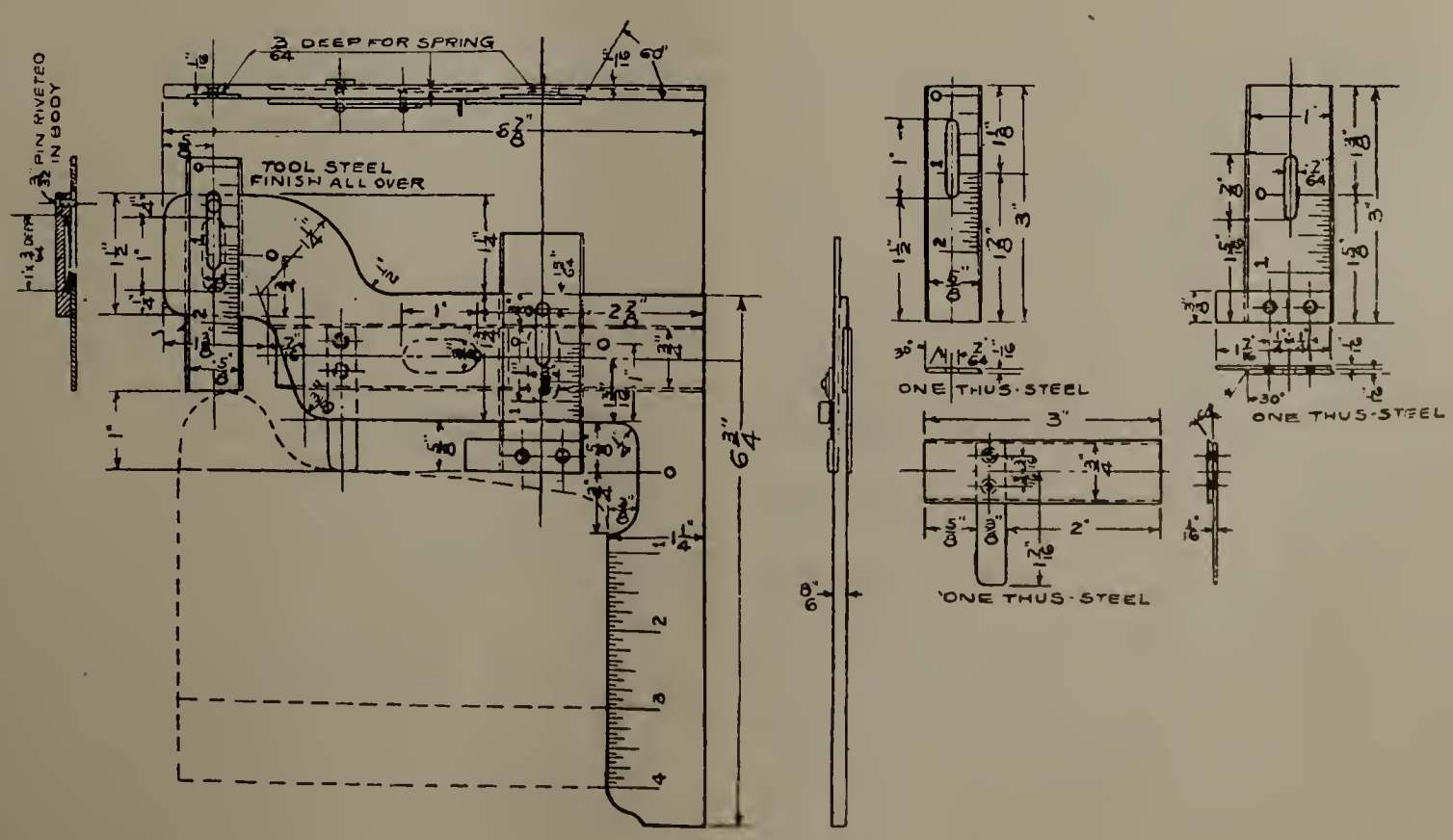

Fig. 2—Tire Gauge.

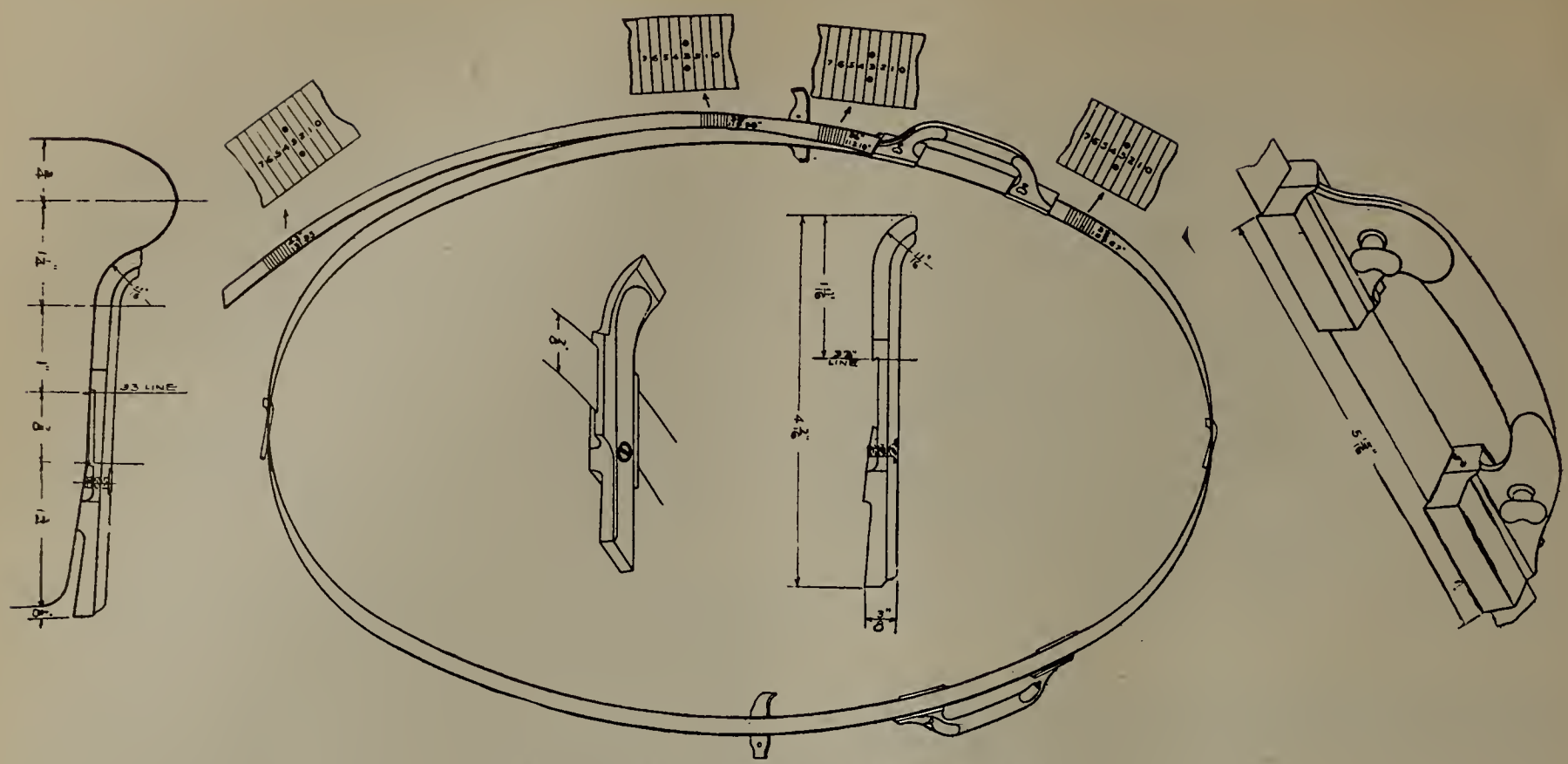

Fig. 3—Wheel Circumference Measuring Gauge.

mind to the wisdom of adopting the same contour on these tires as is used in cast iron wheels. I am not quite sure but what the taper of cast iron wheels is excessive. With wide track it certainly contributes to derailment by reason of the different circumference. On some types of locomotives, if the tire is brought to this taper, it is going to give us some trouble. When we recently received some new Pacific type engines, there was some complaint that the engines were nosing quite a little. I abided my time and the complaints died out. I believe it was because the tires flattened by wear, shortly after they were on the road, down to their natural contour, and stopped a great deal of that nosing. The main drivers of a Pacific type engine are a pivot, to a certain extent, and I do not like to turn off all of this steel unless there is some good reason for it, and am rather convinced that for a steel tire the taper is not desirable. Of course, it is necessary in a cast iron wheel, perhaps, to a certain extent for foundry purposes, but I am not quite sure but that we have gone too far in the M. C. B. Association.

E. W. Pratt (C. & N. W.): I was in hopes, when Mr. Seley started, that he was going a little further and would suggest that the contour of flange for steel-tired wheel might not be right when it is practically the same as a cast iron wheel. There are several flanges 15-16 in. thick after they are worn which do not break, and we do not have much experience, any of us, with broken driving wheel flanges. I believe there are a good many roads that have a minimum thickness of flange for returned tires, and it seems to me now that if we are after that million dollars a day, we might come out publicly and state what our practice is and adopt a safe course.

Mr. Seley: I think that is a very good view of the subject, and I think that this association, as well as the M. C. B. Association, has got to adopt a different tack. I think it is generally believed that had the safety appliances as required by the M. C. B. standards been applied to the cars, that we would not have had nearly as much legislation as we have had. A good many of us talked a great deal on the floor here, but many of us went back home and did not do what we talked about. I think the standards of this association, as well as the M. C. B. Association, should be carried out, and if we cannot do these things on our railways that we are doing in the proceedings of the association we are not at all consistent. I believe that the shop practice, the road practice, and the M. C. B. standards should all agree.

T. H. Curtis (L. & N.): I am glad to hear this discussion on the height of flange, but I am not ready to adopt the 1 in. height of flange for driving wheel, but I might for the tender wheels and engine truck wheels. I will adopt the 1 in. height for switch service, which we have tried and which has given good satisfaction. A word in regard to economy has been mentioned here. I will make a citation that 1⅛ in. is the condemning limit for steel tired wheels for tenders. Switch engine tenders use up a large number of wheels. In a steel tired tender wheel 1⅛ in. is not the condemning limit. For switch engine service this limit can be reduced in some cases to ⅝ in., and by running these wheels under switch engines and making special axles for them it is not necessary to buy any wheels for switch engine service on your line. A great many switch engine tenders will use the M. C. B. 4¼ in. axles, and you might buy the axles with fits as high as 7 in. and mount the wheel on these same journal axles that have a large fit. In this way you can use the tender wheels or car wheels from all your service for your switch engine tenders, and thereby make it unnecessary to purchase any wheels for that service. This has been the practice of the L. & N. for a long time and it works out well.

Robert Patterson (Grand Trunk): I am rather surprised that after the years of experience which we have had in turning the tread of tires straight that a recommendation like this should come in now. Before my time that design of turning tires was abandoned. The report does not say what benefit we are to get from tapering, over our present practice. The only thing I can see is that it is going to make it more difficult to turn the tires; it will take longer to turn them, and they will not be turned as accurately. It will only be a short time after the engine is running on the road when the tires will come to the natural flat tread, the same as we turn them now. This practice was abandoned many years ago, and was abandoned because there was no good purpose served by having the tires turned in that manner, and I would like to know why we should go back to this practice now.

C. E. Chambers (Cent. of N. J.): I do not know where the last speaker is located—the road with which he is connected—or how many interlocking plants he has on his system, but I will say if he has as many as there are on the system with which I am connected he will see the benefit of getting the tire tapered. With the tire turned straight, without the taper, we find that there is a great deal of damage done in breaking detector points and other appliances in connection with our interlocking signal systems; and our road adopted four years ago the tapered turn on the tire to avoid interference with the wires connected with our signaling service.

O. C. Cromwell (B. & O.): I can say the railway with which I am connected turns the tire taper considerably, to what would amount to ¼ in. in the width of the tread. We have been carrying that practice out for about eleven years. We formerly used that practice and went to the Master Mechanics' contour later. A very rapid wearing on the thread at the throat of the flange produced a rapidly reducing thin flange, and a reduction in the mileage between turnings, and after about a year's service they went back to the previous practice of turning the tread a uniform taper, which eliminated the trouble with the grooved tires accumulating so rapidly.

When you turn the full taper in the tread it starts to wear the groove in the tread well away from the throat of the flange and thereby increases the mileage between turnings. Prior to the practice of eleven or twelve years ago, at which period the Master Mechanics' contour was used, for about a year, there was a decrease in mileage. This decrease of mileage developed and was brought to our attention very noticeably by the fact that when we got after the division people for not obtaining mileage out of the locomotives they said it was due to running the tire with partially cylindrical Master Mechanics' tread, and when we went back to the full taper we got the fuller mileage as formerly. As to the height of flange, I am not much concerned about the 1 in. height of flange giving much trouble. On the road with which I am connected we had 1½ in. at one time, and concluded we would cut it down to 1 5-16 in. and then 1¼ in., and finally down to 1⅛ in., and we have not had any more trouble with it than when it was 1½ in.

H. T. Bentley (C. & N. W.): It seems to me that the tire is going to make a good deal of extra work in the shops. I am glad the subject has come up, because it has brought out a num-

ber of points the committee will want to look over a little further. To dispose of the matter I suggest that the committee be continued, and that we suggest to them that they consider some of the points which have been brought up today, and see if they cannot make a report which will more nearly conform to the requirements. I make that as a motion.

Mr. Pratt: Does that include further consideration of the minimum flange for return tires?

Br. Bentley: I will embody that.

Mr. Gaines: I would also venture to suggest that the commitee try to get some reports on the actual contour during the year.

Mr. Bentley: I shall be glad to embody the suggestion in my motion.

The motion was carried.

Mr. Henry. I would like to say in regard to the height of the flange that for many years 1 in. has been our standard for engine truck and tender truck, and we never had reason to believe that was in any way objectionable. It has the advantage that if you start with a short flange you can get more mileage from the wheel before it reaches the point that necessitates renewal. The height of our flanges on driving wheels of switching locomotives is 1 in., that being our standard now for a number of years, having been changed from 1⅛ in. We find that it has the same advantage as the 1 in. flange on a truck wheel. In regard to the question of the taper 1 in 20: Our experience has been that the taper gives a longer life to the flange, the tendency being for the flange to run away from the rail. We believe that that has given us more mileage. The advantage that we felt would result from tapering off the outside of the rim was to delay the time when you have an objectionable amount of generating of heat. It is true that it means a little more shop work, but I think if you actually get the cost of your extra shop work you will find that it won't be worth bothering about. We have not had any experience with 1 in. flange driving wheels on road locomotives. I understand that some roads have recently adopted them and I am also told that they are quite general in European practice.

The President: The next subject is Steel Tires. We have not received a report on this subject, but Mr. Johnson will make a verbal report. Mr. Johnson has only been Chairman of this Committee a short time, and he has not had a full opportunity to work up on the subject.

Steel Tires.

The committee has been without a chairman until very lately, and consequently will give simply a report of progress. Collections of specifications already in use, and information as to the practice on the different railways in the United States, Canada and Great Britain, on the question of handling the purchase of steel tires for locomotives and cars have been collected.

Tabulated statements in connection with this material are given therewith for the information of members. It will be noticed that so far as this continent is concerned purchasing tires by specification is the exception, whereas, in Great Britain it is the rule. Where specifications are used in America, they are used principally as guides, giving limits in analysis within which the tires should be accepted, and guarding railway companies against accepting tires with facial and contour defects, and a specification has been drawn up for your consideration which, if not entirely satisfactory to the association in its present form, will at any rate serve the purpose of bringing out a discussion and criticism of its different details, and should the committee be continued for another year, it may be possible by next convention, to place before you a specification acceptable to the members.

It is considered advisable by the committee that tires for locomotive service should be purchased in three grades, for passenger, freight and switching purposes. A physical drop test that is necessary in the opinion of the committee that it is the only true way of knowing exactly what kind of material you have in your tire as it will show up the result of the working and heat treatment in the manufacture of your tires, which the chemical analysis by itself will not do. The test piece for both pulling and analysis should be taken from the tires which have undergone the drop test.

Copies of the specifications received from the different railways, at home and abroad, together with synopses of replies to our correspondence are included in the report.

The report is signed by:—Lacey R. Johnson (C. P.), chairman; J. R. Onderdonck (B. & O.), R. L. Ettinger (Southern) and M. Hogan (N. Y. C. & H. R.).

Specifications for Steel Tires.

1. Steel for tires shall be made by the open-hearth or crucible process.

2. There will be three classes of tires for the different classes of service as follows:

Class 1. Driving tires for passenger engines.

Class 2. Driving tires for freight engines.

Class 3. Driving tires for switching engines and tires for engine-truck, tender-truck, trailer and car wheels.

3. Chemical Composition.

Class No. 1.

Carbon, not less than	0.50 per cent.
Phosphorus, not over	0.05 per cent.
Manganese, between	0.50 and 0.80 per cent.
Sulphur, not over	0.05 per cent.

Class No. 2.

Carbon, not less than	0.65 per cent.
Phosphorus, not over	0.05 per cent.
Manganese, between	0.50 and 0.80 per cent.
Sulphur, not over	0.05 per cent.

Class No. 3.

Carbon, not less than	0.70 per cent.
Phosphorus, not over	0.05 per cent.
Manganese, between	0.50 and 0.80 per cent.
Sulphur, not over	0.05 per cent.

4. The tires must be free from defects of any kind and finished tires must be accurately machined to the prescribed dimensions of the Master Mechanics' Standard, and rough tires must not be outside the limits of the attached print.

5. The tires shall be distinctly stamped when hot with such brands as the purchaser may require, and in such a manner that these marks shall be legible when the tires are worn out.

6. Drillings from a small test ingot cast with the heat or turnings from a tensile specimen or turnings from a tire (where tires are machined at the works of the manufacturer) shall be used to determine whether the chemical composition of the heat is within the limits specified in Paragraph 3.

When required, the purchaser or his representative shall be furnished an analysis of each heat from which tires are made.

7. The steel for the different classes of service shall meet the following minimum physical requirements:

Class.	Tensile strength lbs. per sq. inch.	Elongation per cent in 4 ins.
(a)	105,000	quotient of 1,550,000 *+ Tensile strength.
(b)	115,000	quotient of 1,300,000 + Tensile strength.
(c)	125,000	quotient of 1,150,000 + Tensile strength.

8. A test tire from each heat represented shall be selected by the purchaser or his representatives, and furnished at his expense, provided it meets the requirements.

8a. The test tire shall be placed vertically under the drop in a running position on a spun foundation with an anvil of at least ten tons weight and shall be subjected to successive blows from a tup weighing 2,000 lbs., falling from heights of 10 fet., 15 ft. and 20 ft. and upwards, until the required deflection is obtained as specified in Paragraph 8b.

8b. The test tire shall stand the drop test described in Paragraph 8a, without breaking or cracking, and shall show a minimum deflection, and it is hoped to present a formula covering this point at the next meeting.

8c. A specimen for the tensile test is to be taken from a tire that has been subjected to a falling-weight test, and it shall be cut cold from the tested tire at the point least affected by the falling-weight test. The tensile test specimen, when cut from a tire that has been subjected to a falling-weight test, shall be cut normal to the radius and parallel to the face.

8d. Should the test tire fail to meet the requirements in any particular, two more test tires shall be selected from the same heat if the manufacturer so desires, and at his expense. Should these two tires fulfill the requirements, the heat shall be accepted.

9. The inspector representing the purchaser shall have free entry to the works of the manufacturer at all times while his contract is being executed. All reasonable facilities shall be afforded to the inspector by the manufacturer to satisfy him that the tires are being furnished in accordance with the specifications. All tests and inspection shall be made at the place of manufacture prior to shipment, and shall be so conducted as not to interfere unnecessarily with the operation of the mill.

Discussion on Steel Tires.

The President: I want to take this opportunity to personally thank Mr. Johnson for what he has accomplished in the exceedingly short time during which he has had this work in hand.

C. A. Seley (C., R. I. & P.): I am personally opposed to the destructive test if it can be avoided. It seems to me that in the matter of tires we ought to hesitate a long time before adopting, or even considering, destructive tests. While with a large order of locomotives one might be able to justify the cost of such tests, I do not believe that is true of a majority of tire purchases. A great many roads buy a limited number of sets of tires at a time; and I rather think, without going into any calculation, that it would require a pretty good sized order to justify the cost of the waste of material in a destructive test. I do not wish, however, to discourage the committee. Nevertheless, I think they ought to have this thought in mind.

G. F. Fowler (Railway Age Gazette): I think it well to suggest to the committee that it would be interesting to the members of the association for the present year if they would give the reasons why they recommend three kinds of tires for three services, running it up from 50 to 70 in the three types of tires involved.

H. T. Bentley (C. & N. W.): I think if the committee can work up a specification that will enable a manufacturer to produce a tire that will not shell out under engine, tender and car service, they will confer a lasting benefit upon the members of this association. The way in which steel tired wheels fall down in service is getting to be a serious matter. At one time we were in the habit of taking up the situation with the manufacturers and telling them, "We have some steel tires that are very badly shelled and we would like to have you look at them and make arrangements to replace them," and they were quite willing to do it; but apparently they have gotten over that disposition and gotten together now, and one of them will replace a shelly tire, and they take the position that it is the service that we give it and not the material in it that caused the tire to shell. Now, it seems to me it is up to the manufacturers to make a tire that will stand the service that we require of it. Some of the manufacturers contend that it is due to sliding. I

have personally shown them tires where on one side there was a shelly condition extending for 14 to 16 in. around the tread, and where on the other side there was no indication whatever of sliding. Hence, I do not think that point is well taken, especially when the defects will penetrate a tire a depth of from ¼ in to to ⅝ in. I would like to know whether other members here have had a similar difficulty, and, if so, if they can recommend anything to overcome it.

T. H. Curtis (L. & N.): I certainly hope Mr. Johnson will answer the inquiry why the Committee recommend three kinds of tires for three services. I agree with Mr. Seley in what he has said respecting the destructive test. The Louisville & Nashville have over 900 locomotives in use and they average about 7 wheels per locomotive, and the tire breakage is practically nil. I do not think we have a tire to break once in a year. I think that is due to the climate, perhaps, because roads in colder climates have more breakage. We have purchased tires from all of the leading manufacturers, and our experience has been pretty much the same with them all.

Mr. Fowler: In answer to the suggestion of Mr. Bentley, I would say that a few years ago I had the opportunity of making some elaborate investigations in respect to steel tires. I was about two years collecting samples of tires from various parts of the country that had shelled out. I had the assistance of the New York Central, the Erie and the Pennsylvania lines in picking out tires with the idea of determining, if possible, what was the cause of the shelling. I had a large number of tires that were shelled out, and I made a very careful examination and investigation to ascertain the cause of the defect. I cut down through the shelled-out portion of the tire where the defect was very apparent, and then on the other side of the tire, and took out the best parts or pieces of the metal that I could find, and I came to the determination in all the tires that I examined that the cause of the shelling out was simply slag. These tires were picked out haphazard by the three roads that I have mentioned. I think it is a matter of clean metal which will prevent that particular shelling. There may be other causes for it, but, as I say, that was the only thing that I succeeded in finding.

F. F. Gaines (Cent. of Ga.): Lately I have run into a little difficulty, especially on the rolled solid wheel, with the flange cracking down towards the hub of the wheel. I would like to suggest to the committee that they endeavor to find some remedy for that defect. The makers claim that it is due to brake burn because of the character of the brake shoes.

The President: Have you used flange brake shoes?

Mr. Gaines: Yes; but lately we have gone to a semi-flange shoe.

The President: We had considerable trouble of that kind, and the wheel makers claimed it was due to the flange shoe. We changed to a semi-flange shoe, leaving about 1½ in. at each end, but we had almost the same trouble. I think with a built-up wheel we have not had very much trouble with the flange cracking. We have taken the position that it is the fault of the wheel maker, not the fault of the railway. We have also taken the position in regard to showing in accord with the experience with Mr. Bentley. I think it is a question of manufacturers making a steel wheel that will stand the service regardless of what the service is, except, of course, abuse.

Mr. Fowler: They had identically that same trouble in Brooklyn in the rapid transit service on the elevated road, using a flange shoe. There were vertical cracks down through the flange of the wheel. They came to the conclusion there that it was a manufacturer's defect, and upon carefully cutting out those wheels and looking them over critically under the microscope we discovered evidences that the trouble was caused by a heat crack due to some process in the rolling of the wheel. And that is the position that is assumed and maintained by the railway company.

Mr. Johnson: As to the destructive test, I would say that this specification was laid before the convention more for the purpose of eliciting suggestions. It was thought that it would bring forth a whole lot of discussion, and that the serious details might be worked out hereafter. We felt very strongly that it was necessary to have such a test for the reason that we give in the report, namely, that it is the only true way of noting exactly what kind of material is in the tire when delivered, because it will show up the result of the working and the heat treatment in the manufacture of the tire, which a chemical analysis by itself will not do. For instance, you can take an ingot which will pass a good chemical analysis, and yet that same ingot can be destroyed by its after-treatment in the process of manufacture.

Then there was a question brought up in regard to the three different grades of tires. The reason for making that specification was not that we should have a good class of tire for one particular service and an inferior class of tire for another so much as that we could use a very much harder steel for freight service than we could for fast passenger service, and consequently get a correspondingly longer life to it. It was not that there should be any difference in the actual quality of the metal. In regard to the shelling out of tires; I suppose there is hardly a railway that has not had more or less experience of that kind, but the chemical analyses which have been used by the Baltimore & Ohio for some years now has practically eliminated that trouble and shelled-out tires are now unknown there.

The committee was ordered continued.

Flange Lubrication.

It has been the purpose of the committee to obtain sufficient information to determine to what extent trouble from flange wear is experienced, the lubricants and means of applying them which are in use and the effectiveness of lubrication in overcoming flange wear and its attendant evils. A circular of inquiry was issued and the committee's report is based upon the replies received from motive-power officials of about 30 railways representing widely different grade, curvature and weather conditions of operation. Among the detailed replies to the committee's circular, two only indicate that the officials represented are not having trouble in their territory from flange wear. In addition, five replies state that lubricators are being used or experimented with, which indicates trouble from this source. Eight answers, on the other hand state that the railways represented have no lubricators in use, and, unfortunately, no statements are made as to flange-wear conditions.

The Lake Shore & Michigan Southern reports having no trouble with road engines, but in some yards the wear on driving-wheel flanges of six and ten wheel switch engines becomes a very serious matter. The Santa Fe has had the same experience with six-wheel switch engines where a large percentage of the total mileage is made on curved track. The railways reporting flange wear have curvatures reaching a maximum of six degrees or more. It would seem, however, that the mileage of curved track relative to total mileage would produce more effect on flanges than the degree of curvature alone. There are a number of other conditions affecting flange wear; among them are length of rigid wheel base, speed, lateral movement and tire spacing, and the degree of stiffness of engine truck. Pacific in passenger service and consolidation in freight service are the types on which flange wear is most prevalent. However, where types are employed with longer wheel base than the consolidation, these are reportd as being subject to greatest flange wear. In general, if other conditions are equal, it is the type with longest rigid wheel base on which flange wear is greatest. There are some notable exceptions to this rule in passenger service. One division of the Pennsylvania with engines of the Pacific type in service reports greatest flange wear on those of the Atlantic type. This is also the case on the Eastern Lines of the Santa Fe System. While there is no statement to this effect, this condition may be due to the Atlantic type operating on a section of the road more severe on flanges because of excessive curvature.

There are two classes of expense due to excessive flange wear. One results from the metal lost in producing standard flanges after they have been badly worn and the other is due to the loss of revenue and the cost of repairs when necessary to turn or remove tires for flange wear between regular shoppings of the engine. The figures covering metal loss have been presented according to different standards and it is, therefore, difficult to compare them.

TABLE I.

Loss of Tire Mileage Due to Excessive Flange Wear.

4-4-2 Type, operating on Missouri Division, A. T. & S. F. Ry.:

Mileage between turnings—Flange Wear (⅞ in. to 1 inch vertical)		18,600
Mileage between turnings—Tread Wear ($\frac{5}{16}$ in. maximum)		60,400
Flange Worn	Metal removed to build up standard flange	⅜ in.
	Tread Wear (Rate $\frac{5}{16}$ in. per 60,400 miles)	$\frac{3}{32}$ in.
	Total reduction in radial thickness between turnings	$\frac{15}{32}$ in.
Tread Worn	Metal removed (To facilitate turning)	⅛ in.
	Tread Wear	$\frac{5}{16}$ in.
	Total reduction in radial thickness between turnings	$\frac{7}{16}$ in.

Flange Worn Tires. Thickness of Tire.	Average Mileage.	Tread Worn Tires. Thickness of Tire.	Average Mileage.
New, 3½ in.	.....	New, 3½ in.	.....
After first turning, 3½ in.	18,600	After first turning, $3\frac{1}{16}$ in.	60,400
After second turning, $2\frac{9}{16}$ in.	18,600	After second turning, 2⅝ in.	60,400
After third turning, $2\frac{3}{32}$ in.	18,600	After third turning, $2\frac{3}{16}$ in.	60,400
Scrap	18,600	Scrap	60,400
Estimated total	74,400	Estimated total	241,600

Total loss of mileage during life of tires 167,200
Loss, per cent 69

TABLE II.

Estimated Saving by Use of Driver Flange Lubricators on Forward Drivers of Mountain Engines, Southern Pacific.

69 Consolidation Engines.	Average Mileage per engine per month.	Total Mileage per Year.	Cost per Mile Run.	Total Cost of tire attention One Year's Service.
Before application	2491	2,062,548	$ .0097	$20,006.72
After application	2635	2,181,780	.002041	4,453.01
Estimated saving effected on mileage obtained with flange lubricators based on cost per mile before use of same	.....	2,181,780	$ .007659	$16,710.2[illegible]

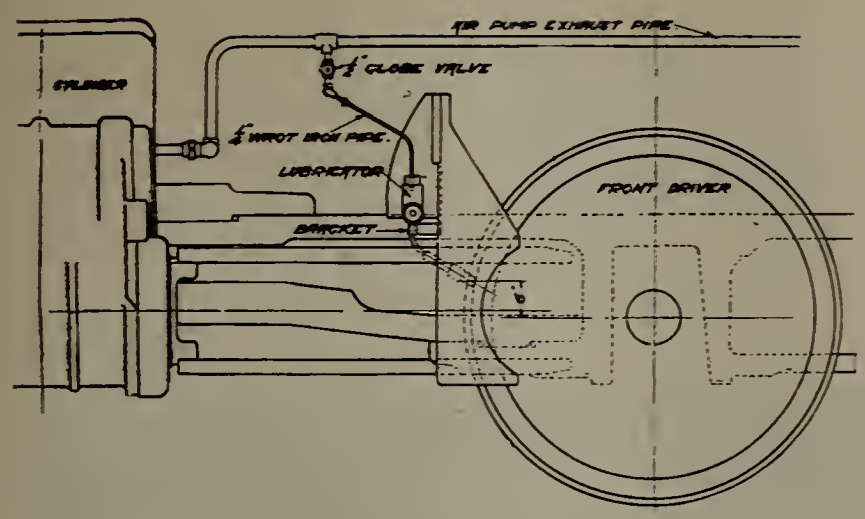

Fig. 1—Flange Lubricator Used by Southern Pacific.

In some instances the loss has been measured in radial thickness of tires, in others by weight per turning, and in still other cases by the value of metal turned off. Where stated in radial thickness, the amount varies between ¼-in. and ¾-in. Loss in weight is stated as varying between 55 lbs. and 1,150 lbs. per engine per running, depending upon the number of wheels, and the extent of flange wear. The loss of metal expressed in terms of money value for engines of various types is given as follows: Four-wheel switch, $45; six-wheel switch, $50; standard, $50; ten-wheel, $50; consolidation, $60; Mallet, $90.

The total mileage obtained during the life of a set of tires appears to be the most satisfactory measure of tire service. On this measure as a basis, the estimate presented in Table I has been prepared to show the loss due to turning tires on account of flange wear compared with the total mileage during the life of tires when turned for tread water. It represents the service obtained from Atlantic type locomotives mileage between tire turnings is computed from the average mileage per locomotive per month and the time between turnings; the average mileage per locomotive per month was obtained from records of 20 locomotives over a period of eight months. Before lubricators were applied, these locomotives averaged 18,600 miles between tire turnings before reaching the limit of 1-in vertical flange wear. Since the adoption of flange lubrication, the same locomotives average 60,400 miles between tire turnings for tread wear. To facilitate proper turning, ⅛-in. is usually removed in the lathe. The total reduction in radial thickness between successive tire turnings will, therefore, amount to $\frac{7}{16}$-in.

That this estimate may be conservative, a very liberal curve has been assumed at the throat of the worn flange. In order to reproduce the standard tire contour it is necssary to turn off ⅜-in. of metal from the tread. The total reduction in radial thickness between tire turnings is $\frac{11}{16}$-in. Assuming a minimum thickness at the last turning of 2 in., the difference in total mileage during the life of tires under the two sets of conditions is 167,200, a loss in tire service of 69 per cent. due to flange wear.

In some instances, where flange wear is excessive, when the front pair of tires becomes badly flange worn, it is removed and exchanged with another pair from the same locomotive. On locomotives with four pairs of drivers, two shifts may be made. But under severe conditions, it is impossible by this means alone to keep locomotives in service until the tires become tread worn. In Table II, showing the estimated saving due to the use of flange lubricators on the Southern Pacific, the average mileage per change of tires necessitated by flange wear was 8,869. The practice was to make two shifts of tires before turning. Computed on this basis, the mileage between successive turnings for flange wear is only 26,607, while tread-wear mileage obtained since the application of lubricators is 42,151.

Fourteen different forms of lubricators are now in use or have been tried by the railways reporting to the committee. These may be grouped according to the kind of lubricant used into the following classes: Crude oil, engine and car oil, solid lubricant, water and exhaust steam. There are four types of lubricators designed to use asphaltum base crude oil. These are the Chicago, the Southern Pacific, the Canadian Pacific and the Rock Island. Where no other name is known that of the railway upon which the lubricator has been developed is used. The Chicago flange oiler is designed to meet the requirements of the Elliott system of lubrication, which embodies a sight-feed oiler located on the back boiler head and a delivery pipe on each side of the engine leading to the flange nozzles. The oiler is similar in general appearance and principle of operation to the sight-feed valve-chamber lubricators in general use in America. The manufacturers recommend that the nozzles be located 15 in. above the rail, 2 in. from the flange toward the outside of the tire and close in toward the tread. Where two pairs of nozzles are used, each delivery pipe is branched through a "T" pipe connection. Where more than two pairs are used either two-feed oilers or one four-feed oiler should be provided. The manufacturer's practice is to apply one pair of nozzles in front of forward driving wheels on road engines; one pair in front of forward drivers and one pair back of rear drivers on switch engines; on Mallet engines in road service, one pair in front of forward drivers on both engines, and in pusher service one pair in front of forward drivers of both engines and a third pair back of rear drivers on high-pressure engine.

The Wabash Pittsburgh Terminal applies nozzles to all drivers on standard type; to the front and main drivers on ten-wheel type; to the front and back drivers on the consolidation; to main and back drivers on six-wheel switch engines, and to the front and back drivers of both engines on the Mallet type. A few consolidation engine trucks are also equipped. The Lake Shore & Michigan Southern applies lubricator nozzles to all drivers on switch engines. The practice adopted by the Santa Fe System is to apply nozzles to the rear of forward drivers where trouble is experienced from frozen sand pipes with nozzles placed in front of the drivers.

The lubricator illustrated in Fig. 1 has been developed by the Southern Pacific after experiments covering the use of a number of other methods of delivering oil to the flanges. This device consists of a steam-jacketed receptacle holding about one and one-half pints of crude oil, which is fed by gravity through a needle valve into the one-half-inch delivery pipe. A clamp bracket gripping the pipe just below the oil cup secures the oiler to the engine frame in front of the forward drivers. Loosely sliding upon the delivery pipe is a piece of one-inch pipe over the lower end of which is slipped a short section of one-inch rubber hose. The projecting end of the hose is shaped to fit the throat of the flange and acts as a shoe to distribute the oil. A weight rigidly attached to the upper end of the one-inch pipe holds the shoe against the flange at all times. The oil-cup jacket is supplied with steam from the air-pump exhaust pipe, which serves to keep the oil in a fluid state during cold weather. The drip from the jacket runs along the delivery tube, tending to prevent congealing of the oil before reaching the flange.

The Canadian Pacific, having tried hard grease and engine oil without success, is about to try crude oil in the lubricator shown in Fig. 2. This is similar to the Southern Pacific type in principle. Oil is fed through a regulating valve from the cup to the feed pipe and flange shoe, which consists of a piece of rubber hose. Steam from the aim-pump exhaust pipe passing through a coil placed within the oil cup maintains the oil in a fluid state. The Chicago, Rock Island & Pacific is using a lubricator on two Pacific type locomotives. The oil receptacle stands upon the running board over the right cylinder. Exhaust steam passes through a pipe leading from the exhaust cavity in the cylinder casting to the oil cup. The accumulation of condensation in the oil cup lifts the lubricant into the delivery pipe, exhaust steam carrying it to the flange. The flow of oil is controlled by the engineer through a globe valve operated by a rod extending back to the cab. A check valve placed in a pipe leading from the cylinder exhaust cavity prevents a back flow of oil through this pipe.

There are two lubricators in use employing lubricant in the solid form: the Collins and the Turnbull. The Collins employs a bracket attached to the frame supports the lubricator in position before the driver. The angle of the lubricator is adjustable to suit conditions imposed by the location of the bracket, on which it is laterally adjustable. The angle should be as nearly as possible 25 deg. from a line parallel to the axle and it should be placed on the horizontal center line of the wheel. The lubricator itself is a tube of rectanuglar cross-section through which slides the lubricator block of hard grease. Below this tube is a spring-feeding device designed to keep the lubricator block pressed against the flange. Pressure from a coil spring acts through a dog engaged in one of a series of notches on the under side of the lubricator block. As the lubricant becomes worn, the spring is recompressed by means of a downward projecting trigger. At the same time the dog is moved back into engagement with the next notch in the lubricator block. This periodical readjustment is the only attention required to operate the lubricator.

Several methods of delivering engine and car oil to the flanges

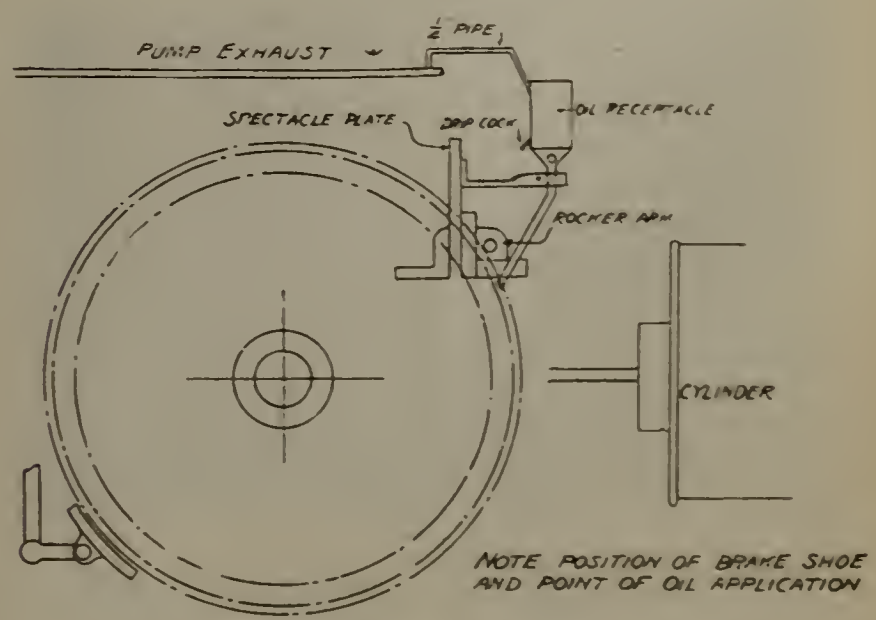

Fig. 2—Flange Oiler, Canadian Pacific.

have been tried. The simplest is a piece of pipe or hose secured to the frame in front of the driver in such a manner as to cause the lower end to bear against the flange. The pipe or hose is filled with oil-saturated waste, which acts as a swab, more oil being supplied from time to time. Where the waste comes in contact with the tire, if packed hard, it will glaze and cease to be effective. If loosely packed, it will be drawn out and lost. Crude oil is being used in this manner on the Illinois Central to a limited extent on Pacific type engines with very little apparent benefit. It is not reliable in cold weather.

The Canadian Pacific has experimented with a siphon lubricator using engine oil, but this has proved inefficient and has been abandoned for the fuel-oil lubricator shown in Fig. 2.

The Chicago, Rock Island & Pacific has 10 Pacific type and 3 consolidation locomotives arranged with piping to carry water from the tank to nozzles spraying against the leading drivers. This means of lubrication is of very limited service. The pipes run horizontally along the engine frames and cause trouble by freezing during winter weather. The Pennsylvania has made use of exhaust steam from the air pump, with what success it is not known. Of the lubricators described, all are in very limited use except those using crude oil.

Flange lubrication on the Santa Fe has been developed to its present state after experiments covering the use of most of the simple devices, such as swabs of oil-saturated waste, water jets operated from the injectors and the block type. These have all proved to be in some manner unsatisfactory. Water and engine oil have both proved too light to satisfactorily resist the action of centrifugal force, being thrown away from the throat of the flange before reaching the rail. Crude oil is now in general use for flange lubrication on the Santa Fe System.

Experience indicates that the delivery of a proper lubricant to the flange will reduce the wear of both flange and rail. The committee's information is confined largely to the results obtained by lubrication with crude oil. California crude oil contains a high percentage of petroleum asphalt. When delivered to the rail by the driving-wheel flange, it forms a thin coating of paste on the inside of the ball of the rail which does not run or spread over the top. When all engines on a division are equipped with lubricators, the rails on the outside of curves will become thus coated, and friction will be reduced on all wheels passing over the track. The resulting reduction in flange wear is noticeable on both passenger and freight car wheels, but data are available for locomotive driving wheels and tender truck wheels only. It necessarily follows that train resistance is much reduced on curves.

On the New Mexico Division, a 65-mile section of which has 288 curves of 6, 8 and 19 deg., it was found impossible to keep engines of the Sante Fe type in service for more than 18,000 to 20,000 miles, but at the present time with lubricators applied they are making as high as 35,000 to 40,000 miles between shoppings with no evidence of flange cutting. On Pacific type locomotives the mileage was increased from between 25,000 and 30,000 to between 75,000 and 100,000. The performance of lubricators has been closely watched in this territory. There are instances where lubrication has not entirely stopped flange wear because of the difficulty experienced in getting engineers to give the lubricators proper attention. On the New Mexico Division, with 100 per cent. of the locomotives equipped, it has been estimated that there has been an increase of about two months in the life of rails, that previously required changing about every thirteen months This is an increased life of 15 per cent. In territories where no figures are available, it is, however, the opinion of all officials that the flange oilers have materially decreased rail wear. The effect on wear of rails on curves has been no less marked. Where rails on 8-deg. and 10-deg. curves would last only about eight or ten months, conservative figures place the life since general application of flange oilers at about three years.

Flange lubricators on the Southern Pacific have become a necessary part of the locomotive equipment in mountain territory. When not working properly the engineers complain seriously until they are repaired. Locomotives ride easier and smoother around curves without the tendency to climb the rail which is evident when the flanges are run without lubrication.

On the Wabash Pittsburgh Terminal before the application of lubricators the average time between shopping for sharp flanges was eight months. A ten-wheel freight engine, working on a section having maximum curvature of 11 deg. 28 min., would not run three months before developing flange wear to such an extent that tires had to be turned. Since applying the lubricator this engine, working on the same section of the road, was out twenty months before shopping, when tires were turned for tread wear. Since the application to all locomotives there has been no occasion to turn tires for flange wear. It has stopped almost entirely on wheels to which the oil is delivered, and oiling the drivers materially decreases the wear on engine-truck wheel flanges. In some cases, oil has been applied to the trucks where wear was unusually excessive. Mallet locomotives showed some signs of cutting the front flanges on the low-pressure engine. By plugging the nozzles leading to the back drivers on this engine and delivering the same amount of oil that was previously used on both pairs to the front wheels, the cutting has been reduced and it has been found that the other wheels are sufficiently oiled. In addition to the direct benefit to the locomotive, there has been a decrease in the wear of switch points and rails on curves, as well as a decrease in the number of derailments. Flange wear has also been reduced on tender truck wheels.

A service test of a yard engine was made on the Kansas City Terminal. The yard where this engine worked is so located that the front and back flanges on the left side of the engine became worn to such an extent that the engine began to climb the rail after being in service about three months. It was then necessary to change tires. The engine equipped with a flange oiler was put in service with a new set of tires and remained in service under these conditions over a period of thirteen months, when it was shopped for other repairs. The flanges were still in good condition. The results obtained were made possible by the careful attention the lubricator is reported to have received from the engineer. The foregoing instances indicate the service of flange lubrication under some of the worst conditions affecting flange wear reported to the committee.

The report is signed by:—M. H. Haig (A. T. & S. F.), chairman; T. W. Heintzelman (So. Pac.) and D. J. Redding (P. & L. E.)

Discussion on Flange Lubricators.

T. O. Sechrist (C. N. O. & T. P.): Before introducing this flange lubricator on our road we would not average over 12,000 miles before we had to change tires, and after the application of the flange lubricator we got as high as 80,000 miles. We have used the Turnbull lubricator. It is made up of two solid cakes, and we could not make a trip, say, of 137 miles before the cakes would be used up. This was caused, of course, by the friction and heat that was developed. Since we have used the Chicago lubricator and asphaltum crude oil as a base, in connection with the lubricator, we have gotten over that trouble. I believe that this committee has given us the information that is necessary, for all of the railways that have adopted the flange lubricator will verify the statements made.

F. F. Gaines (Cent. of Ga.): In the past we have been very much troubled with the repeated cutting of flange. It was not due so much to curvature of the line, either. About a year and a half ago we started in experimenting by putting on a few engines the Southern Pacific type of lubricator, and we got good results so long as we followed up the engineer, but the trouble was that he did not use it always. It was a ltitle out of the way and handy for him to use it. With some engineers we got excellent results. We then tried the Ohio lubricator. It seems with the use of that lubricator the engineer can watch the feeding of the oil, and it is conveniently handy for him, and he is more apt to use it. Our results with it have been very good, indeed. If you take the Pacific type of engines, where we turned flanges about three times on an average we now have every reason to believe that we are going to run them right through from engine repairs to engine repairs, without having to turn tires. On the consolidation engines the results are equally favorable. We have also tried the stick lubricators, but my experience with them is the same as that of Mr. Sechrist. They wear out too fast. Taking it all in all, it seems to me that some lubricator of the form of the Ohio, with crude asphaltum as a base, is the best for the purpose.

E. W. Pratt (C. & N. W.): I would like to ask Mr. Haig if his road has used any flange lubricators on trailer wheels, and with what results? Also if they have had a large enough number of their engines equipped with flange lubricators to indicate whether lubrication on the flange of the rail would decrease the flange wear on other wheels of the engine or train? Also whether there has been any slipping of the engine on curves resulting from this flange lubrication?

G. A. Hancock (St. L. & S. F.): On the Frisco system we have at present about 50 lubricators. We use crude oil asphaltum as a base. What the saving is on the flange of the tender wheels I am unable to say, but we are getting very good results from it on the engines.

O. M. Foster (L. S. & M. S.): I can say that we have had very limited experience with lubricators on switch engines, but it was entirely satisfactory. Indeed, it has given more satisfaction than I have seen in the case of almost any new device.

Mr. Haig: I understood Mr. Pratt to ask if the flange oiler had been applied directly to trailer wheels. I will say that on the road where I am employed flange oilers have not been applied direct to trailer wheels. There is every indication that the flange lubricator lengthens the life of the trailer wheels because of spreading oil on the ball of the rail. That effect is also observed under the tender, and to some extent on the wheels of the cars. The effect of slipping is not serious.

Closing Exercises.

The Association passed a resolution of appreciation to all those who have contributed to the success of this Convention.

Election of Officers.

The following officers were elected:

President, H. T. Bentley, Chicago & Northwestern.

First vice-president, D. F. Crawford, Pennsylvania Lines.

Second vice-president, T. Rumney, Erie.

Third vice-president, D. R. MacBain, Lake Shore & Michigan Southern.

Treasurer, Dr. Angus Sinclair.

Executive Committee members, C. A. Seley (C. R. I. & P.). E. W. Pratt (C. & N. W.) and J. F. Walsh (C. & O.).

D. F. Crawford: The members and the officers of this association, as well as the railways represented, owe a debt of gratitude to Mr. Fuller, our retiring president. His interest in the work of the association is probably best evidenced by the many long journeys taken by him to Washington to attend the frequent meetings of the safety appliance and boiler inspection committees, where his work and assistance have been particularly valuable. I am sure that you will all agree with me that Mr. Fuller during his term as president has rendered splendid service to the Master Mechanics' Association, and in the advancement of the mechanical science and arts. It is, therefore, with great pleasure that I move that we all rise to indicate to him our esteem and hearty thanks.

The motion was unanimously carried.

Scott H. Blewett presented Mr. Fuller the gold badge voted him.

The Convention Band

Rumors had been rife for several months previous to the conventions in railway mechanical and supply circles that there was to be a convention band. Mr. J. Will Johnson, chairman of the entertainment committee, was beset with inquiries and badgered with demands for information, but nevertheless succeeded in keeping the real facts from the public. That such a thing as a really creditable brass band could be brought together from talent within the ranks of those directly interested in these conventions was never dreamed of by those who credited the rumors.

In the past several fake bands have attempted to entertain the Saturday baseball fans with certain take-offs, but this band of "Jaybill's" was the first successful attempt at a real musical organization. The work of breaking in over again some of the men who had not played for years was at times discouraging. On the other hand a few of the players were able to come back with great celerity, as for instance Joe Taylor. The latter claims that it has been thirty years since he has touched a horn. That he must be a slow forgetter will be vouched for by those who saw and heard the stunt portrayed in the accompanying photographic reproduction. This trio, consisting of Joe, Will Rosser and Charley Pilliod, were so well pleased with themselves over the fact that their lips would still stand up under the strain of the unaccustomed work of playing during and after the march to the grounds, that they could not help demonstrating their exhilarated spirits to the crowd by marching out into the field during intermission, rendering the touching ballad arranged for the band by the worthy leader, J. Will Johnson, "How Dry We Are." It should be added here that this stunt was pulled off in spite of the objections of Jaybill.

Seriously the band was just good enough to deserve permanency and it would seem that with the start it now has, and with the encouragement which it received this year, there should be no great difficulty in getting together a considerably larger number of "haswazzers" to form a larger and better band for next year.

Great credit attaches to Mr. Johnson, who in spite of the mountainous character of his other duties as chairman of the entertainment committee, devoted so much time and work to the perfection of the band. Probably Mark Ross was as responsible for the success as anyone other than the leader, as without his beautiful cornet playing the band would have been immeasurably weaker.

The Lady Rooters and the Convention Band at the Ball Game, Atlantic City, June 17, 1911.

A Scouting Party Consisting of the Flower of the Convention Band—Will Rosser, Joe Taylor and Charley Pilliod.

The personnel of the first mechanical convention brass band was as follows:

J. Will Johnson, Pyle National Headlight Co.....Cornet
Mark A. Ross, Pyle National Headlight Co.....Cornet
Chas. A. Pilliod, Pilliod Brothers Co.....Bb Clarinet
Will W. Rosser, T. H. Symington Co.....Bass
Joseph W. Taylor, Sec., A. R. M. M. and M. C. B. Assns.. .....Baritone
George W. Bryant, Thos. Prosser & Son.....Alto
Lyndon F. Wilson, Editor *Railway Master Mechanic*..... .....Slide Trombone
W. E. Sharp, Armour Car Lines.....Alto
F. M. Nellis, Westinghouse Air Brake Co....Slide Trombone
C. W. Bird, Jenkins Bros.....Snare Drum
F. L. Gault, Nathan Mfg. Co.....Slide Trombone
Joe Violand, Crane Co.....Bass Drum
Philip Sreda, American Arch Co.....Eb Clarinet

List of Exhibitors at the Mechanical Conventions

The following list of exhibitors was obtained from various sources and is as accurate as possible. It is presumed, however, that there may be a few omissions in the representation.

Acme Supply Company, Chicago, Ill.—Pressed steel shapes, steel doors, Acme vestibule diaphragm, "Tuco" friction curtain, "Tuco" pinch bar curtain, vestibule curtains and casings, steel deck sash. Represented by H. H. Schroyer, W. L. Conwell, R. M. Campbell, D. Dunbar and Wilson Gephart. Spaces 571, 572.

Adams & Westlake Company, Chicago, Ill.—Steel window frames, train indicator lamps, car lighting fixtures, white ajax metal washstands, signal lamps, sliding door locks, lanterns and parcel racks. Represented by E. L. Langworthy, F. N. Grigg, Wm. S. Hamm, Wm. J. Piersen and George L. Walters. Space 633.

The Eastern Base Ball Team.

Ajax Manufacturing Company, The, Cleveland, Ohio.—Complete line of machine made forgings. Represented by J. R. Blakeslee, J. A. Murray, A. L. Guilford and Henry Gaul. Space 315.

American Arch Company, New York, N. Y.—Security sectional arches. Represented by LeGrand Parish, Chas. B. Moore, M. C. Beymer, J. L. Nicholson and George Wagstaff. Space 408.

American Balance Valve Company, Jersey Shore, Pa.—Samples and models of semi-plug piston valves, balance slide valves and valve gear models. Represented by J. T. Wilson, Frank Trump and C. C. Young. Space 623.

American Brake Company, The St. Louis, Mo.—American automatic slack adjuster, in conjunction with exhibit of The Westinghouse Air Brake Company. Represented by E. L. Adreon, R. E. Adreon, F. E. Schwentler and J. A. Hance. Spaces 27, 29, 31, 136, 138, 140, 142, 144 and 146.

American Brake Shoe & Foundry Company, Mahwah, N. J.—Locomotive driver brake shoes, flanged brake shoes for cast iron tired and rolled steel wheels, unflanged brake shoes for cast iron wheels, combination driver brake heads and reinforcing parts which go with these shoes. Represented by W. G. Pearce, W. S. McGowan, F. L. Gordon, J. B. Terbell, F. W. Sargent, E. L. Janes, A. H. Elliot, E. B. Smith, R. C. Augur, G. R. Law, J. H. Yardley, F. H. Coolidge, R. E. Holt, W. L. Boyer, L. R. Dewey and J. G. Tawse. Space 410.

American Car & Foundry Company, New York, N. Y.—Booths Nos. 609 and 610 for social purposes only. Represented by Scott H. Blewett, L. W. Martin, W. A. Williams,

C. D. Terrell, Olive Runnells, William C. Dickerman, John McEwen Ames, Clark D. Eaton, A. E. Ostrander and William F. Lowry. Spaces 609, 610.

American Engineer & Railroad Journal, New York, N. Y.—Samples of publication. Represented by J. S. Bonsall, E. A. Averill, R. H. Rogers and F. H. Thompson. Space 22.

American Locomotive Company, New York, N. Y.—Reception booth with photographs of locomotives. Represented by James McNaughton, H. F. Ball, G. M. Basford, J. D. Sawyer, J. E. Dixon, W. P. Steele, H. B. Hunt, C. J. Donahue, and Wm. Dalton. Spaces 422, 424.

American Mason Safety Tread Company, Boston, Mass.—Safety treads, safety car step and Karbolith flooring. Represented by Henry C. King, L. H. Myrick, M. H. Eddy. Space 544.

American Nut & Bolt Fastener Company, Pittsburgh, Pa.—Bartley fasteners, new Bartley self-locking fasteners, new Bartley nut, bolt and bond wire fasteners. Represented by Milton Bartley, Edwin M. White, Christopher Murphy and Robert Spencer. Space 320.

American Radiator Company, Chicago, Ill.—Radiators, boilers, heaters for cars, tanks, shops and depots; special valves, regulators, regitherms, steam and hot water heating and ventilating apparatus. Represented by Jas. H. Davis, T. H. Huddleton, J. H. Ives and F. C. Reeder Spaces 300, 302 and 304

American Rolled Gold Leaf Company, Providence, R. I.—Gold leaf for car striping. Represented by E. A. Smith, T. J. Lawler, and Chas. Bower. Space 23.

American Steel Foundries, New York, N. Y.—Andrews side frames, cast steel bolsters, Simplex bolsters, brake beams, Davis cast steel wheels, Simplex couplers, Susemihl roller side bearings, springs and miscellaneous castings. Represented by William V. Keeley, R. P. Lamont, George E. Scott, R. H. Ripley, W. J. Lynch, J. C. Davis, T. D. Keeley, J. V. Bell, G. F. Slaughter, W. Ross Gravener, George C. Murray, Theodore Cook, P. J. Kalman, D. T. Harris, J. W. Dalman, A. R. Brunker, W. A. Blanchard, A. S. Crozier, T. H. Hopkirk, W. M. Rosgovine, R. F. Janney, P. M. Armendariz, G. G. Floyd, F. B. Ernst, C. E. Bauer, J. Soule Smith, and Louis E. Jones. Space 168.

American Tool Works Company, Cincinnati, Ohio.—Motor-driven 24-in. "American" High Duty Engine Lathe, 24-in. Back Geared Crank Shaper, 3-ft. Back Geared Radial and 6-ft. Triple Geared Plain Radial. Represented by J. B. Doan, Herman W. Schatz, Edward Connors and Frank Schweer. Spaces 105, 107 and 109.

American Vanadium Company, Pittsburgh, Pa.—Vanadium ores and alloys. Vanadium steels, both wrought and cast; and vanadium cast iron. Specimens of vanadium steel and iron. Locomotive parts such as side rods, piston rods, crank pins, axles, frames, springs, tires, wheels, tubes, safe ends, cylinders, bushings and piston rings. Vanadium steel and iron automobile parts, such as crankshafts, gears, axles, frames, springs, steering arms, cylinders, etc. Vanadium machinery steels; vanadium high speed tool steels. A large vanadium cast steel yoke, tested by the government, several of which are to be used on the Panama canal. Represented by Jas. J. Flannery, Jos. M. Flannery, Geo. L. Norris, C. L. Hastings, W. J. Bird, Geo. E. Lees and E. M. McIlvain, Pres., The Universal Vandium Company. Space 211.

The Western Base Ball Team.

Anchor Packing Company, Philadelphia, Pa.—Fibre packing and mechanical rubber goods. Tauril sheet packing, throttle and air pump packing. Represented by L. E. Adams, W. R. Haggart, Chas. Barnes, B. J. Miller, H. T. Helmer, W. R. Green, E. Swiler, J. E. Edmonds, Bert Adams, John Cropp, Wm. Jones and J. H. Murray. Space 428.

Armstrong-Blum Manufacturing Company, Chicago, Ill.—"Marvel" automatic high speed saws and hack saws. Represented by Francis J. Blum and George J. Blum. Space 125.

Armstrong Bros. Tool Company, Chicago, Ill.—Grinding machines, tool holders, ratchet drills, lathe dogs, clamps. Represented by James W. Barber and Paul Armstrong. Space 127.

A Few Very Interesting Exhibits.

B. T. Lewis, R. Appliances Co., Chicago, Landing a Big One.

S. W. Midgley, Curtain Supply Co.

F. B. Cozzens, Pres. Buyers' Index Co.

John F. Schurch, V. P. Ry. Materials Co., Chicago.

Atlas Car & Manufacturing Company, Cleveland, Ohio.—Two cars. Represented by L. W. Harston. Space, on track.

Automatic Ventilator Company, New York, N. Y.—Full size and miniature demonstrating models. Represented by George H. Ford, Frank A. Barbey, L. J. Hibbard and W. J. Fleming, Jr. Space 317.

Baldwin Locomotive Works, Philadelphia, Pa.—Jointly occupying space nine with The Standard Steel Works Company as an office for pier headquarters. Represented by Grafton Greenough, Edward B. Halsey, Charles Riddle, George F. Jones, Fred W. Weston and Carl H. Peterson. Space 9.

Berry Brothers, Limited, Detroit, Mich.—Railroad varnishes, fossil gums, including Kauri, Zanzibar and Manilla copals, shellacs, crude and bleached; finished natural wood panels, finished coach panels, in colors and finished metal panels, showing coach finishing, and rubbing varnishes, locomotive black, locomotive finishing, coach and freight car japans, hand rail black, smoke stack black, front end black, etc. Represented by D. W. H. Moreland, H. P. Stephenson, George M. Kerr, James S. Stevenson and Walter E. Paye. Space 36.

Besly & Company, Charles H., Chicago, Ill.—New Besly pattern makers' disc grinder helmet, spiral circles, temper taps, oil and babbitt. Represented by Charles A. Knill, William A. Allen and Edward P. Welles. Space 16.

Betterendorf Axle Company, Bettendorf, Iowa.—One fifty-ton capacity single center sill underframe and trucks, one forty-ton capacity double center sill underframe and trucks, one Bettendorf truck and truck bolster. Represented by J. W. Bettendorf, J. H. Bendixen, G. N. Caleb, F. K. Shults, A. F. Macpherson, E. E. Silk, W. G. Ransom, J. G. Hope, C. J. W. Clasen and C. G. Stolpe. Spaces 200 and 210.

Bird & Company, J. A. & W., Boston, Mass.—Rex refrigerator car felt, freight car roofing, insulation, Ripolin enamel paint. Represented by F. E. Cooper. Spaces 618-620.

Boss Nut Company, Chicago, Ill.—Demonstration of the application and service of the Boss nut; literature, etc. Represented by B. M. Osbun and John A. MacLean. This company is exhibiting in space 330.

Blackall, R. H., Pittsburgh, Pa.—Ratchet brake levers. Hose protector ferule. Represented by R. H. Blackall. Space 652.

Bowser, S. F., & Co., Fort Wayne, Ind.—Oil storage systems complete, long distance, self-measuring pumps, power pumps, automatic registering oil meters, filtering systems for lubricating oils, oil storage tanks of all sizes and shapes, with pumps for handling and measuring all kinds of lubricating, paint and other oils, including gasoline, etc., suitable for storehouses, machine and paint shops, roundhouses, engine rooms, signal towers, automobile garages. Represented by C. A. Dunkelberg, W. T. Simpson, F. T. Hyndman and E. H. Barnes. Space 30.

Buckeye Steel Castings Company, The, Columbus, Ohio.—"Buckeye" cast steel bolsters and side frames, cast steel journal boxes, pivoted coupler yoke and "Major" car couplers. Represented by S. P. Bush, J. C. Whitridge, C. B. Goodspeed, Geo. Groobey, A. H. Thomas, F. L. Allcott and G. T. Johnson. Space 661.

Buffalo Brake Beam Company, New York, N. Y.—Brake beams for all classes of cars, locomotives and electric equipment, meeting Master Car Builders' standards and railway companies' requirements. Represented by S. A. Crone, Edwin Strassburger, Thomas E. Carliss, Roland C. Fraser and C. E. Barrett. Space 418.

Bullard Machine Tool Company, The, Bridgeport, Conn.—42 in. vertical turret lathe, maxi-mill type, and 64 in. maxi-mill; both in operation. Represented by E. P. Bullard, Jr., S. H. Bullard, J. W. Bray, D. B. Bullard, R. H. Snider, J. H. Van Yorx and Wm. B. Price. Space 100.

Burroughs Adding Machine Company, Detroit, Mich.—Bur-

J. H. Bendixon, V. P., Bettendorf Axle Co.

F. K. Schults, V. P., Bettendorf Axle Co.

T. B. Cram, Ry. Materials Co., Chicago.

Claude Baker, Murphy Varnish Co.

Booth of The Railway List Co., W. E. Magraw and J. M. Crowe.

roughs adding machines. Represented by F. A. Willard and Ward Gavett. Spaces 327, 329 and 331.

Buyers' Index Company, Chicago, Ill.—Railway supply index-catalogue and purchasing agents' buying list. Represented by F. B. Cozzens, H. E. Frame, Lloyd Simpson and Alex. Smith. Space 646.

Camel Company, Chicago, Ill.—Security door fixtures for automobile cars, stock cars, coke cars, ventilated box cars, furniture cars and plain box cars. Represented by J. M. Hopkins, P. M. Elliott and W. W. Darrow. Space 595.

Carborundum Company, The, Niagara Falls, N. Y.—Carborundum grinding wheels, aloxite grinding wheels, aloxite and carborundum cloth, carborundum brand garnet paper, carborundum and aloxite grains, carborundum fire sand for furnace lining. The grinding wheels will be demonstrated on grinding machines under actual shop conditions. Represented by George R. Rayner, R. S. Marvin, R. H. Hogg, C. C. Lathrop, W. C. Rankine and C. C. Schumaker. Spaces 102 and 104.

Carey Company, Philip, Cincinnati, Ohio.—Special application of asbestos and magnesia to railway use, insulating paper, car roofing, sill covering, roofing for roundhouses train pipe covering, lagging. Represented by D. R. Warfield, N. S. Kenney and G. A. Huggins. Space 577.

Carnegie Steel Company, Pittsburgh, Pa.—Schoen steel wheels for engine truck, tender, passenger train car, freight car and street car service; three sets high record service wheels mounted on axles; slick gear blanks, cut and uncut; nickel plated samples of structural shapes and plates; concrete reinforcing bars and other bar mill products; rails, ties and track accessories; nickel plated and full size samples of United States steel sheet piling and symmetrical interlock channel bar piling; kegs hooped

A. Stewart, S. M. P., Southern Ry., on the Boardwalk.

with patent steel hoops; track bolts and spikes; soft welding and threading steel for locomotive and car parts, frame bolts, motion pins, nuts, etc., pieces tested and not tested; standard steam railway track on steel cross ties fitted with Duquesne joints; portable track made of light rails and steel cross ties; vanadium steel locomotive springs and locomotive side rods, vanadium steel wheel, vanadium steel street car axle and miscellaneous samples of vanadium steel parts. Represented by John C. Neale, W. G. Clyde, John McLeod, I. W. Jenks, L. C. Bihler, R. B. Woodworth, N. M. Hench, H. W. Maxson, Lee H. Bowman, George F. Goddard, F. C. Deming, Charles C. Cluff, B. S. Yarnall, W. N. Jeffress, H. W. Summers, Walter C. Scott, F. E. Spencer, C. B. Friday, John Hornbrook, K. E. Porter, W. H. H. Carhart and L. S. Sitts. Spaces 411, 551 and 552.

Carter Iron Company, Pittsburgh, Pa.—Carter special staybolt, bar iron, iron chain and ball-bearing chains. Represented by R. A. Carter, Christopher Murphy, H. C. McNair, N. S. Faucett and Henry F. Gilg. Space 32.

Chase & Co., L. C., Boston, Mass.—Goat branch car plushes in plain and prize effects. Angora mohair showing process of manufacture. Chase's car seat duck. Represented by R. R. Bishop, Jr., and W. P. Underhill. Space 10.

Chicago Car Heating Company, Chicago, Ill.—Car heating

The Commercial Acetylene Co.

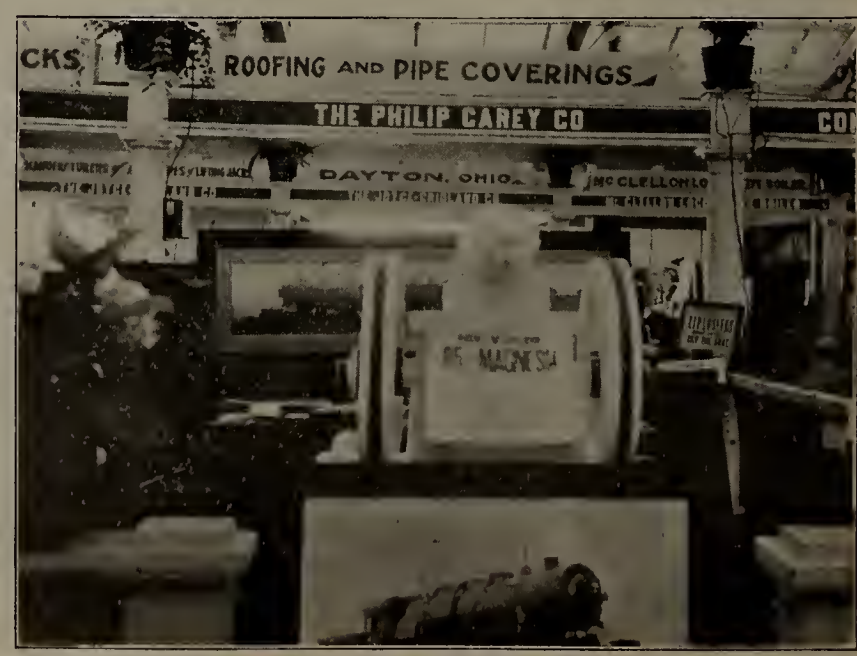

The Magnesia Gun.

C. R. Pollard, Jr., Sales Mgr., Alex. Milburn Co.

J. F. O'Connor, Miner & Co., and J. J. Hennessey, M. C. B., C. M. & St. P. Ry.

J. Allen Smith, V. P., U. S. Lighting & Heating Co.

apparatus. Represented by E. H. Gold, E. E. Smith, J. Vogel, F. F. Coggin, B. A. K Keeler, A. G. Delany and E. A. Schreiber. Spaces 224, 226, 228 and 230.

Chicago Pneumatic Tool Company, Chicago, Ill.—Pneumatic tools, hammers and appliances, compressors and electric drills. Represented by Thomas Aldcorn, W. P. Pressinger, J. T. Duntley, C. E. Walker, James McCabe, G. A. Barden, Geo. A. Rees, L. Summers and H. Kinman. Space 648.

Chicago Railway Equipment Company, Chicago, Ill.—Brake beams of the "P C" creco "E L" creco, diamond special, diamond, national hollow, sterlingworth, ninety-six. Monarch and special types monitor bolsters, creco roller side bearings, brake slack adjuster, journal box and lid. Automatically adjustable brake heads, removable leg brake head. Creco sliding third point brake beam support. Represented by E. B. Leigh, Arthur Yyman, F. T. DeLong, B. F. Pilson, Raymond H. Pilson, G. N. Sweringen, C. P. Williams, Edwin F. Leigh, Ralph Wiggin and Chas. A. Maher. Spaces 585, 586, 587 and 588.

Chicago Steel Car Company, Chicago, Ill.—Models of steel underframes and tank cars. Represented by J. E. Chisholm and H. C. Priebe. Space 520.

Chicago Varnish Company, Chicago, Ill.—Car sides, showing application of "Ce Ve" process of quick painting of cars. Represented by O. H. Morgan, Geo. S. Bigelow, Fred L. Olds and B. K. Buckman, Jr. Spaces 546 and 626.

Chisholm & Moore Manufacturing Company, The, Cleveland, Ohio.—Chain hoists and trolleys. Represented by H. E. Dickerman. Space 163.

Cleveland Twist Drill Company, The, Cleveland, Ohio.—A drill press in operation giving practical demonstration of Cleveland high speed drills and reamers. Also exhibit typical of our complete line of small tools. Represented by E. C. Peck, A. L. Beardsley, W. E. Caldwell and R. D. Botley. Space 123.

Coale Muffler & Safety Valve Company, Baltimore, Md.—Safety valves for locomotives. Represented by H. C. McCarty. Space 589-590.

Cochrane-Bly Company, Rochester, N. Y.—One No. 6 8-in. capacity cold saw cutting-off machine, one No. 2 4½-in. capacity cold saw cutting-off machine, one No. 11 automatic saw sharpener, one No. 2 die filing machine. Represented by R. B. Dow. Space 147.

Coe Brass Manufacturing Company, The, Ansonia, Conn.—Extruded metals in great variety of intricate designs for car trimming and ornamentation; also for use in electrical apparatus, art metal work, etc. Represented by Arthur S. Brown, William W. Cotter and William H. Rippere. Space 518.

Coe Manufacturing Company, W. H., Providence, R. I.—Coe's XX ribbon gold leaf, Coe's ribbon aluminum leaf, gilding wheels and gilding brushes. Represented by E. J. Arlein, Benj. A. Smith and Stuart H. Swallow. Space 328.

Colonial Steel Company, Pittsburgh, Pa.—High speed tool steel and tools made from same. Represented by H. C. Poole and C. E. Bulings. Space 369.

Commercial Acetylene Company, The, New York, N. Y.—Acetylene car lighting equipment, acetylene locomotive headlight equipment, acetylene signal equipment, acetylene marine signal with sun valve, acetylene tanks for welding, tank cut open showing asbestos packing. Represented by F. A. Barbey, H. G. Doran, R. J. Faure, O. F. Ostby, E. T. Sawyer and R. B. Steward. Spaces 201, 203, 205 and 207.

Commonwealth Steel Company, St. Louis, Mo.—Catalogues, photographs. Represented by H. M. Pflager, George E. Howard, Boone V. H. Johnson and Frank S. Barks. Space 313.

Consolidated Car Heating Company, Albany, N. Y.—Steam traps, end valves, inlet valves, thermostatic control of steam heat, steam couplers, electric heaters. Represented by Cornell

Edw. E. Silk, Bettendorf Axle Co., R. S. Miller, M. C. B., N. Y., Chi. & St. L. Ry.

Stephen C. Mason Arriving with the McConway Steel Wheel.

Oscar Ostby and R. B. Steward of the Commercial Acetylene Co.

Williams Car Door Exhibit, M. L. Evans at the Right.

S. Hawley, Thomas Farmer, Jr., W. S. Hammond, Jr., and H. L. Hawley. Spaces 579 and 580.

Cooper-Hewitt Electric Company, Hoboken, N. J.—With the Westinghouse Air Brake Company. Spaces 27, 29, 136, 138, 140, 142, 144 and 146.

Crane Company, Chicago Ill.—Locomotive safety valves, locomotive blow off valves, ash pan blower valves, special locomotie cab valves, Crane system of steam traps, non-return and direct eturn for returning the condensation to boiler, motor operated steel gate vales for superheater steam, special ferro steel gate valves with clean out pocket for creosote and zinc-chloride for timber treating plants. Crane railroad unions, malleable and cast iron fittings, brass globe and gate valves for steam, water and hydraulic service. Represented by F. D. Fenn and G. S. Turner. Spaces 597 and 599.

Crosby Steam Gage & Valve Company, Boston, Mass.—Muffled safety valves, open safety valves, globe and angle valves, spring seat, Johnstone blow off valves, air pump throttle valves and blower throttle valves. Crosby improved locomotive gages, thermostatic water back gages, standard test gages, hydraulic gages, hydraulic press recorders, wheel press recorders and recording revolution counters. Crosby fluid pressure scales for testing gages to 25,000 lbs. Indicators with continuous diagram drums, indicators with lanza continuous diagram appliance. Represented by John J. McCormick and M. D. Johnson. Space 635.

Crucible Steel Company of America, Pittsburgh, Pa.—Rex "A A" high speed tools of various designs, railroad springs, drill rods. Fractures showing heat treatment of steel. Heavy turnings made at high speeds, milling cutters, expanding reamers, dies, chisels, saws, rex "A A" inserted tooth high speed saw. Represented by Fred Baskerfield, W. D. Wintersmith, W. K. Krepps, J. T. Stafford and E. A. Jones. Space 322.

Exhibit of S. F. Bowser & Co., C. A. Dunkleberg in the Center.

Curtain Supply Company, The, Chicago, Ill.—Ring curtain fixtures, car curtains, car curtain materials, "CSCO" and "Rex" diaphragms, all metal rollers, steel sash balance roller, automatic releasable handles and roller bearing hooks. Represented by W. H. Forsyth, R. F. Hayes and S. W. Midgley. Spaces, 593, 594 and 596.

Dahlstrom Metallic Door Company, Jamestown, N. Y.—Metallic doors and steel trimming for the interior of steel cars, moldings. Represented by J. A. Westman, C. Carlson and H. E. Van Orden. Space 384.

Damascus Brake Beam Company, The, Cleveland, Ohio.—High speed passenger beams, freight beams of both solid and truss types, all steel freight beams, adjustable brake heads, forged steel brake heads, forged steel fulcrums. Represented by P. T. Handiges, Geo. L. Polk and Albert Waycott. Space 653.

Davis-Bournonville Company, New York, N. Y.—Large oxy-acetylene welding and cutting equipment such as is suitable for railroads and large manufacturing plants, navy yards, etc. Represented by Chas. F. Gessert, Wm. Joyce, H. R. Swartley, Jr., Wm. W. Barnes, Hugh L. Adams and W. R. Nixon. Spaces 1 and 2, pier end.

Davis Solid Truss Brake Beam Company, Wilmington, Del.—Davis solid truss brake beams, solid steel brake shoe backs, universal air brake combined auxiliary reservoir and cylinder, brake beam testing machine, brake beam deflectometer and special appliance for testing brake beams. Represented by Nathan H. Davis and Thomas C. Davis. Spaces 500, 502 and 504.

Dearborn Drug & Chemical Works, Chicago, Ill.—Booth arranged in the form of a lodge and garden. Represented by R. F. Carr, G. R. Carr, G. W. Spear, J. D. Purcell, A. W. Crouch, I. H. Case, P. G. Jones and H. G. McConnaughy. Spaces 6 and 8.

Detroit Hoist & Machine Co., Detroit, Mich.—Pneumatic turntable tractor, electric turntable tractor, pneumatic motor hoists.

Exhibit of the J. Faessler Mfg. Co.

Exhibit of Green, Tweed & Co.

H. H. Gilbert and Geo. F. Molleson.

W. T. Hanna, Pres., Hanna Locomotive Stoker Co.

Fred Schaefer, Summers Steel Car Co.

and pneumatic motors. Represented by J. C. Fleming and F. B. Fleming. Space 121.

Detroit Lubricator Company, Detroit, Mich.—No. 22 3-feed lubricator, No. 22 3-feed lubricator (sectional), No. 32 4-feed lubricator, No. 42 5-feed lubricator, No. 52 6-feed lubricator, No. 62 7-feed lubricator, No. 0 1-feed lubricator, No. 5 2-feed lubricator, No. 7 2-feed lubricator, No. 11 2-feed lubricator, Detroit transfer filler, 1-feed, 2-feed and 4-feed air cylinder lubricators, Detroit air pump lubricator, Detroit emergency valve, automatic steam chest plugs, boiler valves, guide cup, rod cup, Detroit force feed oilers. Represented by Herbert I. Lord, F. W. Hodges and A. D. Homard. Space 596.

Dickinson, Inc., Paul, Chicago, Ill.—Smoke jacks, chimneys and ventilators. Also cross sectional drawings showing various engine houses equipped with Dickinson smoke jackets. Represented by J. A. Meaden and A. J. Filkins. Space 231.

Dixon Crucible Company, Joseph, Jersey City, N. J.—Dixon's pure flake lubricating graphite, graphite greases, silica-graphite paint, pipe joint compound, pencils, crucibles, belt dressings, graphite engine front finish, air brake graphite, etc. Represented by H. A. Nealley, J. A. Tucker, Wm. Houston, L. H. Snyder and H. W. Chase. Space 24.

Dressel Railway Lamp Works, The, New York, N. Y.—Headlights, engine classification lamps, tail lamps, switch lamps, station lamps. Represented by F. W. Dressel, Robt. Black, H. S. Hoskinson, F. W. Edmunds, B. P. Claiborne and E. W. Hodgkins. Spaces 382 and 383.

Duff Manufacturing Company, The, Pittsburgh, Pa.—Barrett track jacks, automatic lowering jacks, geared ratchet screw jacks, Duff bearing screw jacks, Bethlehem forged steel hydraulic jacks. Represented by T. A. McGinley, G. F. Freed, E. A. Johnson and G. A. Edgin. Spaces 548 and 628.

Durbin Automatic Safety Car Coupler Company of Canada, Limited, Sarnia, Ontario.—Automatic safety car coupler. Represented by J. F. Durbin, C. T. Hunn and V. S. Durbin. Space 325.

Eagle Glass & Manufacturing Company, Wellsburg, W. Va.—Welded steel and one-piece oil cans, torches, buckets and supply cans. Represented by J. L. Fusner. Space 656.

Edison Storage Battery Company, Orange, N. J.—Storage batteries for car lighting, signaling and ignition. Details of manufacture of batteries fully shown. Represented by H. G. Thompson and H. L. Davisson. Space 209.

Edwards Company, The O. M., Syracuse, N. Y.—Window fixtures, sash balances, extension platform steel trap-doors, tin barrel shade rollers, padlocks, steel office furniture and filing devices. Represented by O. M. Edwards, E. W. Edwards, 2d, Edward F. Chaffee, G. G. Norris, W. A. Le Brun, C. H. Rockwell W. C. Bradbury and T. P. O'Brian. Spaces 649 and 651.

Electric Controller & Manufacturing Company, Cleveland, O.—Lifting magnet, operated from electric crane; automatic motor starters, controllers, electric brakes in operation. Represented by F. R. Fishback and R. G. Widdows. Spaces 162 and 164.

Electric Storage Battery Company, The, Philadelphia, Pa.—Car lighting batteries, Exide vehicle batteries, chloride accumulators. Represented by H. E. Hunt and E. L. Reynolds. Space 407.

Emery Pneumatic Lubricator Company, St. Louis, Mo.—Automatic method of lubricating triple valves and brake cylinders. Represented by E. A. Emery and N. J. McAloney. Space 608.

Enterprise Railway Equipment Company, Chicago, Ill.—Steel car on the exhibit track.

Faessler Manufacturing Company, J., Moberly, Mo.—Boss roller flue expanders, universal roller flue expanders, ball bearing roller flue expanders, arch flue expanders, improved sectional beading expanders, pneumatic sectional tube expanders, rapid beading expanders, perfect flue cutting machine and cutters, patch bolt countersinking tools. Represented by J. W. Faessler and C. F. Palmer. Space 615.

Fairbanks, Morse & Company, Chicago, Ill.—One No. 28 all-

C. A. Dunkleberg, S. F. Bowser & Co.

W. P. Hawley, U. S. Lighting & Heating Co.

W. T. Dunning, Industrial Supply & Equipment Co.

Wm. White and Mrs. White.

American Mason Safety Tread Co., Henry C. King and L. H. Myrick.

steel gasoline motor car for one, two or three passengers, two-cycle two-cylinder direct connecting engine, one No. 26 section gasoline motor car with two-cycle two cylinder gasoline engine. Track jacks, ball bearing jack and hydraulic jacks. Represented by A. A. Taylor, G. J. Akers, E. M. Fisher, A. C. Dodge and F. H. Douglas. Spaces 550 and 630.

Flannery Bolt Company, Pittsburgh, Pa.—Tate flexible staybolts, radial and crown staybolts, Tate, installation tools for applying the Tate bolt, staybolt tests. Represented by B. E. D. Stafford, W. M. Wilson, Barton H. Grundy, George E. Howard, Joseph M. Flannery, Thomas J. Leahey, Tom R. Davis, James J. Flannery and J. Rogers Flannery. Space 528.

Flower Waste & Packing Company, New York, N. Y.—Flower's resilient car journal box packing. Represented by Frank D. Waller and George T. Hanchett. Space 426.

Ford & Johnson Company, The, Michigan City, Ind.—Perfection car seats, parlor car chairs, fibre rush furniture, pressed steel pedestals, seating material. Represented by W. E. Murphy, B. H. Forsyth, C. A. Vandeveer, W. F. La Bonta and G. T. Paraschos. Space 364.

Forsyth Brothers Company, Chicago, Ill.—Forsyth high capacity buffing device, draft gear, deck sash ratchets, Chaffee centering device, Forsyth one-piece metal doors, metal sash, metallic adjustable weather strips, pressed steel unit car side construction. Represented by G. H. Forsyth, A. H. Sisson and W. M. Wampler. Spaces 632 and 634.

Fort Pitt Malleable Iron Company, Pittsburgh, Pa.—Brown journal boxes. Represented by F. J. Lanahan, P. Brown and A. M. Fulton. Space 650.

Foster Company, The Walter H., New York, N. Y.—Hydro-pneumatic radial drill, all geared multi-spindle drill, pneumatic stay bolt nipper. Represented by Walter H. Foster, Herbert L. Kenah and A. L. Kendall. Space 111 and 113.

Franklin Manufacturing Company, The, Franklin, Pa.—Asbestos pipe coverings, asbestos and magnesia pipe and boiler coverings, smoke jacks, corrugated sheathing, shingles, rope and wick packing, throttle and air pump packing, asbestos "Carline" for lining steel cars, wool and cotton waste and perfection journal box packing. Represented by R. J. Evans, H. S. Hayden, G. S. Stuart, L. B. Melville and E. R. Rayburn. Space 11.

Franklin Railway Supply Company, New York, N. Y.—Booths

Exhibit of Nelson Valve Co.

Frost Ry. Supply Co., H. W. Frost, G. A. Cooper, G. L. Harvey.

A. Frederick Jenkins, Alex. Milburn Co.

J. W. Faessler and C. F. Palmer of the J. W. Faessler Mfg. Co.

E. B. Wilson, V. P., Gold Car Heating & Lighting Co.

on Young's Pier fitted up for receiving visitors, where were placed on file 300 daily newspapers from motive power centers throughout the United States, Canada and Mexico. Among the track exhibits shown was a car equipped with the Franklin flexible metallic car roof. Represented by J. S. Coffin, S. G. Allen, C. L. Winey, R. G. Coburn, W. L. Allison, W. H. Coyle, J. S. Coffin, Jr., and John L. Mohun. Space 406.

Frost Railway Supply Company, The, Detroit, Mich.—Harvey friction spring gears, Detroit metal weather strip. Represented by Harry W. Frost, George A. Cooper and George L. Harvey. Space 582.

Galena-Signal Oil Company, Franklin, Pa.—Reception booth for guests. Represented by W. E. Amann, E. H. Baker, B. H. Grundy, F. A. Guild, Wm. Holmes, M. J. Hurley, Geo. L. Morton, W. J. Walsh, Jno. A. Wilson, E. W. Hayes, H. Hillyer, E. G. Johnson, J. A. Roosevelt, F. B. Smith, P. H. Stack, J. G. Arn, W. E. Brumble, J. W. Bunn, J. J. Bunn and D. L. Eubank. Space 38.

Garlock Packing Company, The, Palmyra, N. Y.—Air pump and throttle packings, metal and fibrous valve rod packing, accummulator and air compressor packing, hydraulic packing, air pump gaskets, superheat sheet packing. Represented by H. N. Winner, Phil. Arnold, T. P. Dunham and F. S. Bulkley. Space 510.

General Electric Company, Schenectady, N. Y.—Train lighting steam turbine, gasolene electric generating set, centrifugal air compressor, portable air compressor, mercury arc rectifier, railway motor, induction motor, CVC motor, with controlling panel, drum controllers, contractor panel, starting rheostat, steam and air flow meters, bracket fan motor, A. C. and D. C. portable breast drills, crane motor, single phase commutator motor, adjustable speed motors, fractional H. P. motors, train lighting lamps, electric heating and cooking devices, arc lamps, Mazda lamps, gas electric car. Represented by J. G. Barry, W. B. Potter, A. W. Jones, C. E. Barry, Frank Rhea, J. W. Ham, H. C. Chatain, R. E. Woolley, C. Fair, W. J. Clark, H. D. Hawks, C. C. Pierce, R. E. Moore, M. O. Kellogg, C. A. Raymond, H. L. Monroe and A. L. Totten. Spaces 350 to 363, inclusive.

General Railway Supply Company, Chicago, Ill.—Metallic steel sheathing, National steel vestibule trap-doors, Resisto insulation, Flexolith composition flooring, Imperial car window screens, Perfection sash balances, Eclipse deck sash ratchet, National standard roofing, National vestibule curtain catch. Represented by F. L. Wells, H. U. Morton, W. L. Conwell, W. S. Humes, J. F. Oerlerich and R. M. Campbell. Spaces 573 and 574.

Gold Car Heating & Lighting Company, New York, N. Y.—heating, lighting and ventilating apparatus for passenger and refrigerator cars. Represented by E. E. Gold, E. B. Wilson, A. B. Strange, W. E. Banks, W. H. Stocks, J. M. Stayman, G. F. Ivers, F. H. Smith, E. J. Ronan, J. O. Brumbaugh, F. O. Bailey A. D. Stuver and F. A. Purdy. Spaces 301 to 311, inclusive.

Goldschmidt Thermit Company, New York, N. Y.—Complete appliances for making thermit welds. Appliances for butt welding wrought iron and steel pipes. Specimen welds showing amalgamation of metal obtained. Metals and alloys produced free from carbon by the thermit process. Photographs of important repairs executed by the thermit process. Samples of thermit, nickel thermit and chromium thermit. Represented by William C. Cuntz, G. E. Pellissier, H. D. Kelley, Dr. E. A. Beck, W. R. Hulbert, H. S. Mann and J. G. McCarty. Space 339.

Gould Coupler Company, New York, N. Y.—M. C. B. couplers, Gould malleable iron journal boxes, freight friction draft gears, passenger friction on draft gears, "Hartman" ball bearing centre plates and side bearings, Gould cast steel side frames, passenger cast steel end sill with friction buffer, passenger couplers, Moritz coupler, cast steel truck bolsters, Gould cast steel freight car end sill with friction back of coupler horn, friction draft gear and coupler, Gould draft beams with coupler and friction striking plate. Gould steel draft frame, friction gear and friction striking

G. A. Dodd, Virginia Equip. Co.

W. B. Wood, Forest City Paint & Varnish Co.

W. K. Carr, Genl. Car Insp., Norfolk & Western Ry.

H. U. Morton, W. S. Humes, J. Oilrich, G. R. S. Co.; H. H. Schroyer, W. W. Gephart, Acme R. S. Co.; W. L. Conwell, R. C. Hallet, R. Campbell, Mr. Wilson, Mr. Chamberlain, Trans. Utilities Co.

Exhibit of the McConway & Torley Co.

plate. Gould locomotive tender coupler with base casting and friction back of coupler for buffing, steel draft frame combination spring gear, friction striking plate and coupler, Gould steel platform with double operated passenger coupler, combination spring gear for passenger cars, combination spring passenger buffer, Gould "Simplex" system of electric lighting. Represented by F. P. Huntley, Geo. G Milne, C. E. Rood, W. F. Richards, Dr. C. W. Gould, J. S. Keeler, Geo. R. Berger, W. M. Lalor, W. F. Bouche, M. R. Shedd and J. W. Jepson. Spaces 637, 639 and 641.

Greene, Tweed & Company, New York, N. Y.—Palmetto packing, round and square, for high steam pressures. Palmetto packing, twist. Palmetto packing, in sets for railroad service. Manhattan packing, for low steam and hydraulic pressures. Favorite reversible ratchet wrench. Represented by F. E. Ransley and B. M. Buckley. Space 606.

Greenlaw Manufacturing Company, The, Boston, Mass.—Flexible metallic hose for use between engine and tender or between cars for conveying steam, air or oil, flexible joints for roundhouse purposes. Represented by H. A. Royce, George L. Toppan and W. A. Greenlaw. Spaces 316 and 318.

Grip Nut Company, Chicago, Ill.—Grip nuts, monogram bolt locks. Represented by E. R. Hibbard, J. W. Hibbard, W. G. Willcoxson, Ed. Wilhelm, J. W. Cuddy and E. A. Magurn. Space 600.

Hale & Kilburn Company, Philadelphia, Pa.—Walkover car seats, all-steel car seats, reclining car seats, parlor car chairs, steel car interior finish, doors and sash, steel construction in various forms. Represented by V. von Schlegell, A. F. Old, C. W. Laskay, Thos. Dunbar, B. F. Pilson and R. H. Pilson. Spaces 412 and 414.

Hammett, H. G., Troy, N. Y.—Trojan metallic packing. Trojan and Sansom bell ringers, triple valve bushing roller. Represented by H. G. Hammett, A. O. Van Dervort and E. C. Sawyer. Space 365.

Harrington, Son & Company, Inc., Edwin, Philadelphia, Pa.—Hand operated portable chain hoists, including Harrington peerless hoists, screw hoists and differential hoists. Represented by Roger Sherron, A. M. Harrington, R. F. Scott, W. J. Somerset, M. W. Christian, and J. A. Slaughter. Spaces 141 and 143.

Hewitt, H. H., New York, N. Y.—Car trucks. Represented by S. J. Sill. Spaces 153 to 161, inclusive.

Hobart-Allfree Company, The, Chicago, Ill.—Allfree cylinders and valves for locomotives. Newton divided car replacers, Freeland derailers. Represented by E. H. Allfree and W. H. England. Space 506.

Home Rubber Company, Trenton, N. J.—Various kinds of packing for locomotive use. Represented by A. R. Foley. Space 321.

Hunt Company, C. W., New York, N. Y.—"Industrial" Railway, rolled steel and cast plate track, turntables, shop cars, special cars for handling wheels and axles, coal valves, coal tubs, locomotive coaling station models and photographs, hoisting and transmission rope, gravity bucket coal conveyors, motion pictures of cargo handling cranes. Represented by A. C. Summers, J. D. Flack and J. A. Allen. Spaces 154 to 160, inclusive.

Hunt-Spiller Manufacturing Corporation, South Boston, Mass. Parts of locomotive castings made of Hunt-Spiller gun iron

Chas. H. Besly Co.; Ed. P. Welles, Pres., John Miller, Jr., Genl. Supt., Chas. H. Kuell, Mgr. R. R. Dept., W. H. Allen, Spec. Rep.

Rear—Left to Right—A. T. Ross, E. S. Maulsby. Front Row—F. R. McFeatters, M. C. B., Union R. R., T. J. Laden, F. P. Clark.

G. H. Williams, G. H. Williams Co.

Seely Dunn Seeking His Competitors in Time for Breakfast.

Geo. F. Ivers, Gold Car Heating & Lighting Co.

Thos. J. Moore, Jr. and Sr., Holcomb Steel Co.

and which have been in service and show the stability and wearing qualities of this product, these parts being piston valve packing, cylinder packing, piston valve gages, crosshead shoes, eccentrics and straps, driving boxes, driving box shoes and wedges, piston heads, side rod bushings. Represented by W. B. Leach, Frederic Parker, J. G. Platt, V. W. Ellet and A. J. O'Connor. Spaces 565 and 566.

Hutchins Car Roofing Company, Detroit, Mich.—Car roofs and car doors. Represented by D. W. Hawksworth, Carter Blatchford, H. S. Waterman and W. D. Thompson. Space 631.

Illinois Steel Company, Chicago, Ill.—With the Carnegie Steel Company. Represented by W. H. H. Carhart. Space 411.

Independent Pneumatic Tool Company, Chicago, Ill.—Thor piston air drills, reversible flue rolling, reaming, tapping and wood-boring machines, close-quarter drills, grinders, pneumatic chipping, calking, flue beading and riveting hammers, pneumatic staybolt drivers. Represented by James B. Brady, W. O. Jacquette, John D. Hurley, F. W. Buchanan, R. S. Cooper, J. P. Bourke, T. J. Carroll, Geo. A. Gallinger R. T. Scott, W. R. Gummere, F. H. Charbono, H. F. Finney, R. Mapolsden, V. W. Robinson, G. C. Wilson, Chas. A. Brose and Walter A. Johnson. Spaces 576 and 578.

International Correspondence Schools, Scranton, Pa.—Demonstration by apprentices of apprentice class work in classes on various railways. Represented by W. N. Mitchell, E. M. Sawyer, C. M. Drennan, J. F. Cosgrove and G. B. Moir. Space 43.

Jacobs-Shupert U. S. Fire Box Company, Coatesville, Pa.—Fire box mounted on flat car on the exhibit track. Represented by A. W. Whitford.

Jenkins Bros., New York, N. Y.—Jenkins Bros. iron body and brass globe, angle, checks and gate valves, regular and extra heavy; brass and iron body blow-off valves; Jenkins "96" packing pump valves, gasket tubing and car heating discs. Represented by Arthur C. Langston, B. N. Neely, H. D. Gordon. C. B. Yardley, Jr., Chas B. Ohlsen and Frank Martin. Space 602.

Jessop & Sons, Inc., New York, N. Y.—Tool steel, sheet steel and steel for circular saws. Represented by John E. Sandmeyer, O. H. Reynolds and W. F. Wagner. Space 416.

Johns-Manville Company, H. W., New York, N. Y.—Asbestos roofings, wool felt roofings, water-proofing materials, pipe covering felts, air-pump throttle, coil, spiral and sheet asbestos packing, high and low pressure pipe coverings and pipe covering felts, high temperature fire brick cements, pipe covering and boiler cements, electrical materials, boiler loggings and cements, vitribestos pipe coverings, transite asbestos shingles, asbestos wood, asbestos smoke jacks, sanitor seats and tanks, underground electrical conduit, steel car insulation, refrigerator car insulation, car roofings, locomotive cab roofing, underground sectional conduit for steam lines, air brake expander rings. Represented by J. E. Meek, J. C. Younglove, F. M. Gilmore, H. A. Waldron, H. L. Leach, C. W. Gearhart, G. A. Nicol, H. G. Newman, Geo. Christenson and P. C. Jacobs. Spaces 591 and 592.

Johnson Manufacturing Company, The, Urbana, Ohio.—Railway standard galvanized iron and tinware. Represented by Isaac T. Johnson and Joseph M. Brown. Space 330.

Joliet Railway Supply Company, Joliet, Ill.—Brake beams and side bearings. Represented by H. M. Perry. Space 603-605.

Jones & Laughlin Steel Company, Pittsburgh, Pa.—Beams and channels, spikes, tin and black plate, chains, cold rolled bars and shapes, wire and wire products, cold-twisted square bars, angles, bars and special shapes. Represented by J. K. Barker, A. A. Wagner and F. S. Slocum. Space 420.

Joyce-Cridland Company, The, Dayton, Ohio.—Jacks. Represented by Geo. W. Llewellyn, Chas. D. Derby, N. Kohl and P. J. Ford. Spaces 522 and 524.

Kennicott Company, The, Chicago, Ill.—Space 650.

Kerite Insulated Wire & Cable Company, New York, N. Y.—Kerite insulated wires and cables. Represented by R. D. Brixey, Azel Ames, P. W. Miller, J. A. Renton, B. L. Winchell, Jr., and Geo. A. Graber. Spaces 611 and 613.

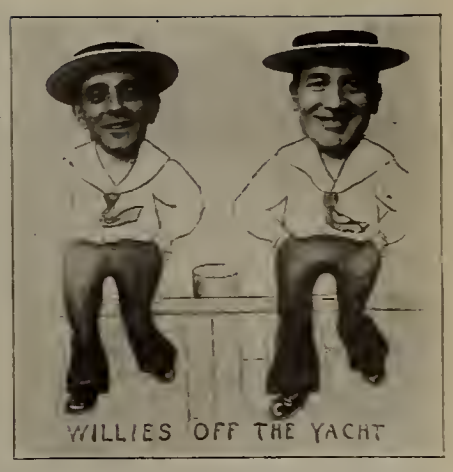

T. L. Dodd of Worth Bros., and S. D. Gloss, Atlantic Insulated Wire & Cable Co.

W. H. Stocks, Gold Car Heating & Lighting Co.

J. E. Johnson, Laconia Car Co., F. A. Morrison, Mason Regulator Co.

North Storms, Tinsley Ry. Supplies & Equip. Co., R. L. Brown, National Lock Washer Co.

Wm. Jessop & Sons, Inc., J. E. Sandmeyer, O. H. Reynolds.

Curtain Supply Co., Left to Right—W. H. Forsythe, Mrs. Midgely, Mrs. Dunkleberg, C. A. Dunkleberg.

Keystone Drop Forge Works, Chester, Pa.—Keystone connecting link, Keystone safety shackle hook and a full line of Standard and Special drop forgings. Represented by Geo. H. Berlin, Chas. F. H. MacLaughlin and Wm. J. McDevitt. Space 604.

King Fifth Wheel Company, Philadelphia, Pa.—Roller-bearing pivot plate. Represented by A. O. Chase. Space 622.

Kirby Equipment Company, Chicago, Ill.—Franklin MCB dust-proof journal boxes and lids, samples of globe cold drawn seamless steel tubing for locomotive and stationary boilers, also for all mechanical purposes. Represented by T. B. Kirby, F. W. Renshaw, C. A. Carscadin and Harry W. Frost. Spaces 583 and 584.

Knight Pneumatic Sander Company, Huntington, Ind.—Sanders for steam and electric locomotives and motor cars. Represented by D. L. Shaeff. Space 644.

Land's Machine Company, Waynesboro, Pa.—One double head 1½-in. Landis bolt cutter, one single head Landis bolt cutter, pipe threading die heads, solid adjustable die head, automatic open die head for terret lathes, bolt cutters and die heads. Also a quantity of samples consisting of results on our machines. Represented by Ira D. Grove, J. W. Willis, H. L. Fisher and S. F. Newman. Space 115.

Landis Tool Company, Waynesboro, Pa.—One 16 x 72 plain self-contained grinding machine with gap, one No. 2 (12 x 32) Universal grinding machine. Represented by J. H. Hollinger. Spaces 108, 110 and 112.

Lehon Company, The, Chicago, Ill.—Roofrite plastic car roofing, waterproof canvas for passenger coach roofing, cab and caboose roofing, insulating paper, mule-hide roofing, staylastic paint, damptite waterproofing compound. Represented by Tom Lehon. Space 13.

Linde Air Products Company, The, Buffalo, N. Y.—Oxy-acetylene welding and cutting apparatus, single and duplex acetylene generator, stationary type, portable self-contained oxy-acetylene welding and cutting plant, portable oxy-coal gas cutting apparatus for wrecking trains, locomotive boiler repaired by oxy-acetylene welding under hydraulic test pressure, with numerous other samples of locomotive and steel car construction and repair by oxy-acetylene welding. Represented by G. E. Kershaw, J. A. Warfel, E. E. Radcliffe and G. M. Bailey. Space 660.

Locomotive Improvement Company, The, Clinton, Iowa.—Full sized driving box showing Markel's removable driving box brass, lateral motion plates, flangeless shoes and wedges, also a quarter sized model showing these three devices, models for jigs for forming brasses and wedges, model of solid back end of main rod. Represented by L. W. Baker. Space 15.

Locomotive Superheater Company, New York, N. Y.—Model of Schmidt superheater in model locomotive boiler. Represented by S. Hoffman, George L. Bourne, H. B. Oatley, W. A. Buckbee and C. D. Hiferty. Space 408.

Lucas Machine Tool Company, Cleveland, Ohio.—Horizontal boring machine power forcing press. Represented by W. L. Cheney and J. A. Leighton, Jr. Space 150

Lunkenheimer Company, The, Cincinnati, Ohio.—Regrinding valves, "Renewo" regrinding renewable seat valves, puddled semi-steel valves, cast steel valves, iron body brass mounted valves, pop safety valves, water gages, gage cocks, oil and grease cups.

The U. S. Light & Heating Co., A. Russell, D. W. Pye, Mr. Bliss.

Exhibit of the Joseph Dixon Crucible Co.

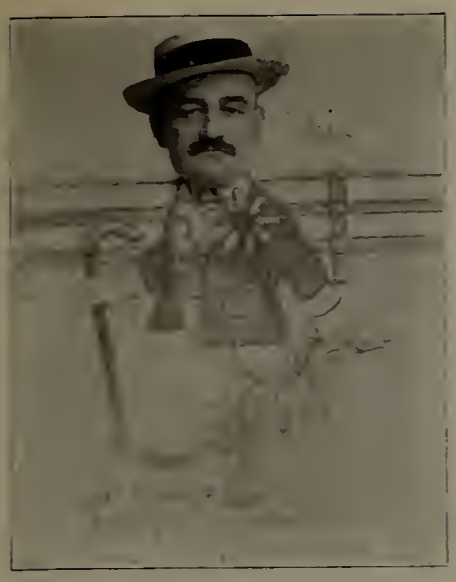

B. E. D. Stafford, Flannery Bolt Co.

R. T. Walbank, Glidden Varnish Co.

H. H. Schroyer, Acme Ry. Supply Co., and H. U. Morton, General Ry. Supply Co.

Represented by Lane Thompson, Joseph H. Hewetson and W. M. Hood. Space 366.

Lupton's Sons Company, David, Philadelphia, Pa.—Lupton steel sash for side walls. Pond continuous sash for monitors and saw-tooth roofs. Pond operating device, Lupton rolled steel skylight. Represented by Clarke P. Pond, C. F. P. Buckwalter and James E. Gorman. Space 508.

McClellon, J. M., Boston, Mass.—McClellon locomotive boilers. Represented by J. M. McClellon and D. S. Reynolds. Space 526.

McConway & Torley Company, The, Pittsburgh, Pa.—McConway steel tired wheel. Buhoup flexible truck, Buhoup 3-stem passenger coupler, Pitt passenger coupler, Janney "X" and Penn freight couplers, steel castings. Represented by Stephen C. Mason, E. M. Grove, Wm. McConway, Jr., Geo. W. McCandless, H. C. Buhoup and I. H. Milliken. Spaces 617, 619 and 621.

McCord Manufacturing Company, Chicago, Ill.—Metal sash and window fixtures. Represented by D. W. McCord, Morrill Dunn, J. A. Lamon, R. L. McIntosh, W. J. Schlaks, H. E. Creer and B. S. McClellan. Space 657.

McCord & Company, Chicago, Ill.—Malleable iron, cast steel and vanadium grey iron journal boxes. Pinless lid and outside metal dust guard journal boxes, National equalizing wedges, draft gears, spring dampeners and operating locomotive force feed lubricator lubricating driving box. Represented by D. W. McCord, Morrill Dunn, J. A. Lamon, R. L. McIntosh, W. J. Schlacks and H. E. Creer. Space 655.

McGraw Publishing Company, New York, N. Y.—Publisher of *Electric Railway Journal, Electric World and Engineering Record,* Photographs of offices and printing plant; sample copies of its publications; bound copies convention souvenir number and convention daily issues of *Electric Railway Journal;* copies of Electric Railway Dictionary, a new book devoted exclusively to electric cars and their equipment. Represented by Hugh M. Wilson, Henry W. Blake, Joseph A. Kucera, Rodney Hitt, C. A. Babtiste, W. K. Beard, Harold W. McGraw and D. S. Gordon. Space 7.

Main Belting Company, Philadelphia, Pa.—A belt conveyor and elevator, showing an acid heat and water-proof conveyor. Represented by J. D. McIlwain and W. E. Fawcett. Space 640.

Manning, Maxwell & Moore, Inc., New York, N. Y.—Hancock inspirators, Hayden & Derby injectors and ejectors, Metropolitan injectors, Hancock valves, Ashcroft steam gages, Consolidated pop safety valves, general jet apparatus, machine tools, Celfor drills. Represented by Robert Bole, L. M. Brigham, P. M. Brotherhood, J. N. Derby, C. B. Flint, W. O. Jacquette, H. Little, Chas. L. Lyle, M. A. Sherrett, Chas. L. Brown Jos. A. Bush and J. J. Faas. Spaces 114 and 132.

Massachusetts Mohair Plush Company, Boston, Mass.—Car seats, mohair car plushes, frieze plushes and friezettes. Represented by William W. Melcher. Space 20.

Matthews-Davis Tool Company, St. Louis, Mo.—Davis expansion boring tools. Represented by E. E. Davis and J. W. Mc Keen. Space 647.

Michigan Lubricator Company, Detroit, Mich.—Locomotive lubricators from two-feed to five-feed automatic drain valves. Represented by Frank P. Smith and Cullen Corlis. Space 658.

Midvale Steel Company, The, Philadelphia, Pa.—One rolled steel wheel for passenger service, one rolled steel wheel for freight service, one steel tired wheel for passenger service, one driving axle for locomotive. Represented by H. M. Deemer, W. Aertsen, T. W. Illingworth, A. E. Goodhue, Charles Tietze, W. P. Barba, Ernest Harrah, Samuel Griffith, James Thompson and W. S. Edger. Space 37.

Mid-Western Car Supply Company, Chicago, Ill.—Anderson draft gear. Ward brake shoe. Represented by James E. Forsyth and D. O. Ward. Space 330.

Milburn Company, Alexander, Baltimore, Md.—Milburn acetylene lights and the new Alexander acetylene generator for headlights and train lighting. Represented by A. F. Jenkins, C. R. Pollard, J. W. McCawley and Frank Coffin. Space 18.

A. I. Totten, General Electric Co.

J. L. Mallory, Chicago Car Door Co.

Edward Ryan, Pres., Ryan-Johnson Co.

R. C. Fraser.

At the Ball Game—C. E. Fuller, C. F. Rood, Jack Meek.

Moore & Company, Benjamin, Brooklyn, N. Y.—Paint vehicles for railroad paints, mixed paints and varnishes. Represented by Woodruff Sutton, W. C. Belcher and R. C. Bergman. Space 19.

Moran Flexible Steam Joint Company, Louisville, Ky.—Flexible joints, automatic barrel fillers, brass ball unions, pivot joints. Represented by C. H. Jenkins, W. W. Goodwin, Mrs. T. W. Moran and Frankel L. Moran. Space 21.

Mudge & Company, Burton W., Chicago, Ill.—Garland System of passenger car ventilation, full size models showing application of Garland ventilators to monitor and arch roof cars. Ventilator registers and operating devices. Represented by Burton W Mudge, Herbert Green, Thomas H. Garland and George W. Bender. Spaces 625 and 627.

Nathan Manufacturing Company, New York, N. Y.—Injectors, steam valves, boiler washer and tester, oil cups, whistles, engine and boiler fittings, lubricators, boiler checks, steam fire extinguisher, water gages and safety valves. Represented by Alfred Nathan, J. S. Seeley, Chas. R. Kearns, Otto Best, N. W. Anthony, Edw. S. Toothe, J. C. Currie, W. O. Taylor and Edw. Laterman. Spaces 589 and 590.

National Lock Washer Company, The, Newark, N. J.—Models showing complete car window curtains and curtain and window fixtures; also National lock washers, with rib, for car construction. Represented by F. B. Archibald, R. L. Brown, W. C. Dodd, J. H. Horn, Daniel Hoyt and John B. Seymour. Space 4.

Tom Plunkett's Sunday School Class. Left to right—C. F. Palmer, J. W. Faessler, Thos. Plunkett, C. D. Derby, F. Edmonds, H. Gilg.

National Malleable Castings Company, The, Cleveland, Ohio.—Tower, Climax, Sharon, Latrobe car couplers, and repair parts for Tower, Climax, Sharon, Latrobe, Melrose, Munton and Chicago couplers, knuckle pins. Represented by S. L. Smith, F. R. Angell, R. T. Hatch, C. A. Bieder, L. S. Wright, K. R. Johnston, J. H. Jaschka, B. Nields, Jr., E. O. Warner, R. H. Pilson, J. H. Merrill, Jr., Geo. V. Martin, O. W. Loomis and Jas. A Slater. Spaces 530, 532, 536, 612, 614 and 616.

National Tube Company, Pittsburgh, Pa.—Two booths, one used as a reception booth. In the other were shown Kewanee unions, union ells and tees, flange unions, high duty metal valves and cast and malleable iron fittings, also apparatus used in testing Kewanee unions. Represented by L. F. Hamilton, B. F. Bart, J. E. Fleming, J. G. Bateman, J. A. Dillon, C. R. Cumming, J. T. Goodwin, J. O. Ramsey, G. N. Riley, L. R. Phillips, P. J. Conrath and W. S. Bitting. Spaces 26 and 212.

Nelson Valve Company, Philadelphia, Pa.—Gate, globe and check valves, open-hearth steel valves, electrically operated valves. Represented by Carlisle Mason, R. E. Thomas and W. J. Spencer. Space 152.

Newhall Engineering Company, George M., Philadelphia, Pa.—Photographs of wrecking, locomotive, station cranes, etc., manufactured by Industrial Works, of Bay City, Michigan. "NB" air brake hose connection, Vance steam trap. Represented by David Newhall, Morton L. Newhall, A. F. Baumgarten, William L. Brown, William Waring and J. A. Coutts. Spaces 378, 379, 380 and 381.

Mr. C. H. Williams, Jr., and Mr. G. N. Sweringer, Jr., of the Chicago Railway Equipment Co.

Chicago Ry. Equipment Co. Mr. DeLong emulating "Meet me face to face" Tom; G. N. Sweringer.

Left to right—John McKinnon, J. F. O'Connor, Geo. P. Nichols.

An Outside Exhibit near the Greek Temple.

New York Air Brake Company, New York, N. Y.—Apparatus shown in section as follows: Two engine brake valves, style L, two engineers' brake valve, style B3, two slide valve feed valves, style J, two straight air brake vales, two air signal valves, two automatic control valves, two quick action triple valves, style K, one enameled reservoir, one automatic connector head. Represented by F. M. Whyte, B. Pratt, W. T. Henry, H. F. Bickel, N. A. Campbell, O. E. Moore, G. O. Hammond and C. E. Leach. Spaces 330 to 338, inclusive.

Nickel-Chrome Chilled Car Wheel Company, Pittsburgh, Pa.—Two 33-in. car wheels, "M. C. B." 1909 tread, one 33-inch nickel-chrome tire, one 36-inch nickel-chrome tire, samples nickel-chrome alloy, sample fracture through chill tread of a car wheel. Represented by Robert C. Totten and Stephen D. Barnett. Space 542.

Niles-Bement-Pond Company, New York, N. Y.—New model of the Pond car wheel lathe driven by electricity. Represented by E. L. Leeds, Malcolm Imbrie, D. H. Teas, J. T. McMurray, J. P. Illsley, Geo. F. Mills, J. K. Cullen, D. J. Normoyle and E. S. Cullen. Space 37.

Norton, Inc., A. O., Boston, Mass.—High speed ball bearing jacks. Represented by A. O. Norton, J. O. St. Pierre, R. L. Skidmore, R. D. Bates and H. J. Wilson. Space 575.

Pantasote Company, The, New York, N. Y.—Samples of Pantasote curtain and upholstery materials, made-up Pantasote curtains, samples of Agosote in different shapes and sizes, painted and unpainted samples of Agosote veneered, section of a car showing Agosote as headlining and interior trim. Represented by J. M. High, W. A. Lake and A. S. Barrows. Space 400.

Parker Car Heating Company, Limited, The, London, Ontario.—Parker anti-freezing and hot water systems of railway car heating, simplified and new "E.T.O." equipments, stop valve, steam gages, regulator valve for controlling unit system in sleeping cars. Automatic auxiliary and discharge traps, half moon thermostatic traps and trainline valves. Represented by Thomas Parker, J. M. McEvoy and C. S. Parker. Spaces 216 and 218.

Parkersburg Iron Company, Parkersburg, Pa.—Knobbled charcoal iron boiler tubes and arch pipes. Represented by H. A.

Mrs. W. B. Leach and Party.

P. H. Minschull, J. G. Platt, Mrs. W. B. Leach, Harry Warnock, S. M. P. Monongahela R. R., W. B. Leach, Miss Warnock, Mrs. P. H. Minschull, Mrs. Harry Warnock.

Zug Iron & Steel Co., A. M. Brown, J. H. McCloy.

Chicago Car Door Co., Messrs. Mallory and Hill.

Beale, Jr., George Thomas, 3rd, W. H. S. Bateman, C. L. Humpton, J. A. Kinkead, L. P. Mercer, J. H. Smythe and H. C. Hunter. Space 388.

Parsons Engineering Company, Wilmington, Del.—Full size model of locomotive fire box with equipment of heater pipe and nozzle showing method of installing the Parsons system of combustion on locomotives. Represented by John H. Parsons, Wm. H. Savery, Harry Morris and J. A. Carey. Space 514.

Pennsylvania Flexible Metallic Tubing Company, Cleveland, Ohio.—Interlocking joint four-wall metal hose. Represented by J. M. Odenheimer, W. A. Johnson and B. C. Willis. Spaces 324 and 326.

Pilliod Brothers Company, Toledo, Ohio.—Pilliod locomotive valve gear. Represented by J. C. Pilliod and H. J. Pilliod. Space 367.

Pilliod Company, The, New York, N. Y.—Spaces 563 and 564.

Pittsburgh Equipment Company, Pittsburgh, Pa.—One Pennsylvania 70 ton bolster, one Cudahy complete underframe consisting of two truck side frames, interlocking journal boxes and spring planks, one double I-beam truck bolster, one interlocking draft carrier, one pair of Stickel draft carriers, one insulated rail joint, one body bolster. Represented by H. V. Seth and John Allison. Space 405.

Pneumatic Jack Company, Inc., Louisville, Ky.—Twelve in. diameter by 3¼ in. lift, pneumatic journal jacks, tadem cylinder, capacity 7½ to 11 tons, 18 in. diameter by 12 in. lift, pneumatic

"Bob" Patterson. of the G. T. R., and Daughter.

G. H. Williams.

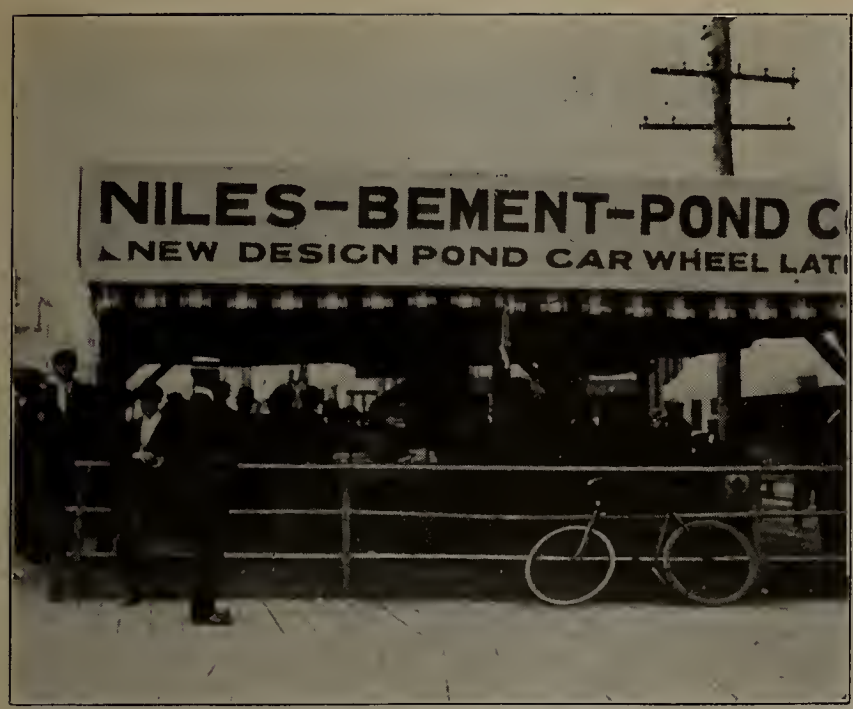

An Outside Board Walk Exhibit.

Left to right—B. A. Clements, Worth Bros.; Mrs. L. F. Wilson; Frank Cheesman, Cheesman & Elliot; Miss Alice Mooney; Mrs. B. A. Clements.

car jacks, tandem cylinder, capacity 17 to 25 tons. Represented by A. T. Macdonald, L. J. Dittmar and J. S. Leake. Space 234.

Pocket List of Railroad Officials, New York, N. Y.—Space 7.

Post & Company, Inc., E. L., New York, N. Y.—Zero metal and babbitt metal for railroad use. Represented by F. O. Ketcham and P. H. Rebhorn. Space 624.

Pressed Steel Car Company, Pittsburgh, Pa.—Photographic display of steel passenger and freight cars, mine cars and pressed steel specialties. Represented by O. C. Gayley, N. S. Reeder, C. A. Lindstrom, J. F. MacEnulty, J. H. Mitchell, C. E. Postlethwaite, L. O. Cameron, J. G. Bower, G. T. Merwin, J. C. Anderson, J. S. Turner, W. H. Wilkinson, M. S. Simpson, H. S. Hammond and G. W. Ristine. Space 659.

Pyle-National Electric Headlight Company, Chicago, Ill.— Reception booth. Represented by R. C. Vilas, W. A. Vilas, J. Will Johnson and Mark A Ross. Space 34.

Pyrene Manufacturing Company, New York, N. Y.—Chemical fire extinguisher. Represented by E. N. Davidson and Thomas Areson. Space 645.

Railway Age Gazette, New York, N. Y.—Publishers of the Railway Age Gazette, The Signal Engineer, the Daily Railway Age Gazette. Represented by Edward A. Simmons, Lucius B. Sherman, Henry Lee, Frank S. Dinsmore, John N. Reynolds, Cecil R. Mills, Samuel O. Dunn, Bradford Boardman, Roy V. Wright, William Forsyth, George L. Fowler, Robert E. Thayer, William E. Hooper, E. S. Faust, Harold D. Horton, William D. Horton, W. W. Newcomb, Lewis I. Randolph, T. E. Crossman Space 1.

Railway Appliances Company, Chicago, Ill.—Snow flangers,

Trill Indicator Co., W. L. Trill explaining an Indicator to F. P. Gates of Union Mfg. Co.

O. S. Jackson, S. M. P. of the C. T. H. & S. E. Ry., became anxious about his new duties and attempted to communicate with his office by wireless.

Buffalo Brake Beam Co., S. A. Crone.

vestibule diaphragms, vestibule casings, vestibule curtains, curtain handles, car replacers, skid shoes, automatic tongue lift and truck brake. Represented by Percival Manchester, W. W. Hoit, E. R. Packer and B. T. Lewis. Space 312.

Railway List Company, Chicago, Ill.—Publishers of the *Railway Master Mechanic, Monthly Official Railway List, Railway Engineering and Maintenance of Way.* Represented by W. E. Magraw, C. S. Myers, L. F. Wilson, J. M. Crowe and Warren Edwards. Space 35.

Railway Materials Company, The, Chicago, Ill.—Steel back brake shoes for locomotive drivers and all other classes of steam and electric railway service. Designs of Ferguson shop furnaces for all blacksmith and boiler shop purposes. Represented by T. B. Cram, Geo. Hoeffle, E. C. Folsom, C. H. True, J. F. Schurch and W. M. Simpson. Space 581.

Railway and Engineering Review, Chicago, Ill.—Represented by Willard A. Smith, Arthur E. Hooven, P. G. Stevens and John M. Lammedee. Spaces 12 and 14.

Ralston Steel Car Company, Columbus, Ohio.—An all-steel, flush floor, drop bottom gondola, 50 tons capacity. Represented by J. S. Ralston, J. E. Tesseyman, F. E. Symons, H. H. Hale,

Samuel G. Allen, B. E. D. Stafford and J. S. Coffin, in the Booth of the Franklin Ry. Supply Co.

W. T. Sheldon, S. Rea, W. F. La Bonta, J. R. Forney, H. Tesseyman, Wm. Mahaney and Geo H. Glover, Jr. Space on track.

Reliance Electric & Engineering Company, Cleveland, Ohio.—Reliance adjustable speed motors, of the armature shifting type, with automatic starting equipment; Reliance speed dial, G. & E. crank shaper driven by Reliance adjustable speed motor. Represented by H. Morley Hitchcock, A. W. Ray, D. G. Darling, E. A. Lewis and S. C. Potter. Spaces 137 and 139.

Remington Typewriter Company, New York, N. Y.—Remington typewriters with Wahl adding and substracting mechanism. Represented by A. T. Rose and E. S. Maulsby. Space 416.

Remy Electric Company, Anderson, Ind.—American electric headlight. Represented by T. B. Arnold.

Restein Company, Clement, Philadelphia, Pa.—Belmont air pump and throttle packings, corrugated tender hose and steam hose, flexible metallic connections for between engine and tender.

Grip Nut Co., the Hibbard Bros. face the camera at the left.

Joliet Ry. Supply Co., H. M. Perry.

Hunt-Spiller Mfg. Corp. Left to right—Mrs. W. B. Leach, Fred Parker, W. B. Leach.

Chicago Steel Car Co., J. E. Chisholm and H. C. Priebe.

Represented by Clement Restein, H. O. Fettinger, Norman B. Miller and W. J. Cromie. Space 16.

Rock Island Manufacturing Company, Rock Island, Ill.—Vises of different types. Represented by C. E. Shields and W. M. Briggs. Space 656.

Rockwell Furnace Company, New York, N. Y.—Furnaces for railway shops. Represented by W. S. Quigley, S. L. Barnes and F. S. Garrett. Space 2.

Royersford Foundry & Machine Company, Inc., Royersford, Pa.—Power punch and shear, Sells roller bearing shaft hanger box. Represented by Y. C. Freed, John D. Sells and A. Loomis. Spaces 129 and 131.

Rubberset Company, Newark, N. J.—Paint and varnish brushes. Represented by A. L. Holtzman and T. B. Denton. Space 310.

Safety Car Heating & Lighting Company, New York, N. Y.—Car Heating and lighting apparatus, car lighting by Pintsch gas, axle light and vapor light, latest designs of Pintsch mantle lamps and electric fixtures, car heating by thermo jet direct steam and hot water with thermo jet control. Represented by R. M. Dixon, A. C. Moore, C. B. Adams, J. S. Henry, Wm. St. John, J. G. Van Winkle, H. D. Donnell, J. M. Wallis W. L Garland, M. F. Elliott, Geo. H. Chadwell, Robt. C. Shaal, J. A. Dixon and Geo. E. Hulse. Space, stairway platform.

Scarritt-Comstock Furniture Company, St. Louis, Mo.—Scarritt automatic and reversible coach seats and Scarritt reclining chairs. Represented by C. C. Taylor. Space 306.

Scullin-Gallagher Iron & Steel Company, St. Louis, Mo.—Steel castings. Represented by F. L. Norton, Geo. L. L. Davis, S. R. Fuller, Jr., and H. H. Waldron. Space 25.

Seller & Company, Inc., William, Philadelphia, Pa.—Locomotive injectors and accessories, turret rest and face plate drivers, locomotive wheel lathe, turret rest and face plate drivers for car wheel lathe, hangers and couplings for shafting. Represented by Strickland L. Kneass, John D. McClintoch, Charles T. Wilson, Edward L. Hölljes. C. B. Conger and W. W. Storm. Spaces 567 and 570, inclusive.

Sherwin-Williams Company, Cleveland, Ohio.—Reception booth. Represented by E. M. Richardson, W. B. Albright, Thos. Madill and R. L. Graves. Space 33.

Simplex Railway Appliance Company, New York, N. Y.—With the American Steel Foundries exhibit. Space 168.

Sipe & Company, James B., Pittsburgh, Pa.—Oils. Represented by R. E. Rogers and W. F. Robinson. Space 636.

Smith Premier Typewriter Company, The, Syracuse, N. Y.—Machines for correspondence, billing and way-billing. Represented by H. A. Johnstone. Spaces 333 and 335.

Sprague Electric Works of General Electric Company, New York, N. Y.—Flexible steel armored air brake hose, pneumatic hose, steam hose, hydraulic and water hose, hose fittings, flexible steel conduit, flexible steel armored conductors, outlet boxes and fittings, electric fans. Represented by A. C. Bakewell, D. C. Durland, H. H. Hornsby and H. W. Uhl. Space 386.

Standard Coupler Company, New York, N. Y.—Standard steel platforms and buffing mechanism. Sessions-Standard friction draft gears. Represented by Geo. A. Post, A. P. Dennis, E. H. Walker, R. D. Gallagher, Jr., C. D. Jenks and Geo. A. Post, Jr. Spaces 385 and 387.

The track exhibit of the United Engr. & Foundry Co.—A car equipped with Tate-Jones oil furnaces and a large forging press.

Pittsburg Equipment Co., O. S. Pulliam, H. V. Seth.

Standard Steel Car Company, New York, N. Y.—Reception space only. Represented by J. M. Hansen, J. B. Brady, R. L. Gordon, H. G. Macdonald, W. A. Libkeman, A. Christianson and E. G. Huvett. Spaces 557 and 558.

Standard Steel Works Company, Philadelphia, Pa.—Driving tire, steel tired wheels, rolled steel wheel driving wheel centers, driving axles, forgings, rings and springs. Represented by Charles Riddell, C. F. Dodson, J. E. Buckingham, W. T. Bentley, C. H. Peterson, H. P. Knight, George F. Jones, W. B. Keys A. R. Green, H. G. Pearce, J. C. Sellers, Jr., and F. W. Western. Space 9.

Storrs Mica Company Owego, N. Y.—A new form of ruby mica lantern globes shown in lantern frames of various leading manufacturers, white mica lantern globes and mica headlight chimneys. Represented by A. P. Storrs and Charles P. Storrs. Space 601.

Street, Clement F., Schenectady, N. Y.—Locomotive stoker. Represented by Clement F. Street, N. M. Lower and Chas. F. Gernert. Space 403.

Strong, Carlisle, Hammond Company, The, Cleveland, O.—Samples of Randall graphite lubricator and sample bearings, showing the installation of Randall graphite sheet lubricator. Represented by B. E. Carpenten, Charles F. Pierce and R. L. Woodward. Space 314.

Summers Steel Car Company, Pittsburgh, Pa.—Summers balanced side bearing truck, Summers all-steel box car under balanced side bearing trucks. Represented by E. W. Summers, J. M. Summers and Frederic Schaeffer. Space 149.

Symington Company, The T. H., Baltimore, Md.—Farlow draft gear, Symington journal boxes, flexible dust guards. Represented by T. H. Symington, E. H. Symington, W. W. Rosser, D. F. Mallory, W. A. Garrett, D. L. Symington, B. S. Johnson, I. O. Wright, J. F. Symington, C. J. Symington, T. C. deRosset and A H. Weston. Spaces 559 to 562, inclusive.

Templeton, Kenly & Company, Limited, Chicago, Ill.—Simplex car jacks, coach jacks, locomotive jacks and track jacks. Represented by A. E. Barron, F. A. Barbey, W. B. Templeton and J. H. Hummel. Space 319.

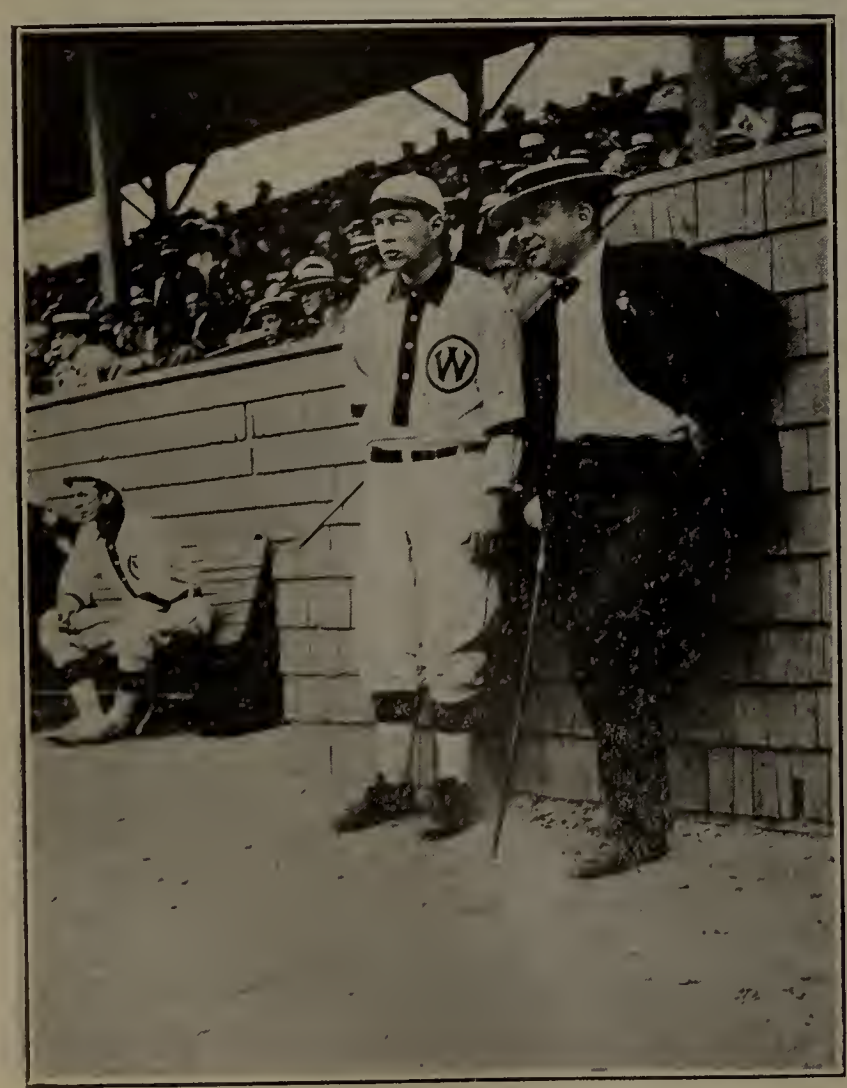

H. S. Hammond, Pressed Steel Car Co., Capt. of Western Base Ball Team; W. M. Wilson, Flannery Bolt Co.

Flannery Bolt Co.—B. E. D. Stafford, T. R. Davis, G. E. Howard and W. M. Wilson.

Topping Brothers, New York, N. Y.—Full line of Burrows' ball bearing jacks and "Quick Lift" jacks, also "The Mechanigraph" for preparing pencil drawings for blue printing. Represented by W. R. Burrows, W. C. Burrows, C. L. Crabb and W. C. Douglas. Spaces 402 and 404.

Trill Indicator Company, Corry, Pa.—Engine indicators of the continuous card type, using an unlimited amount of paper; also outside spring and inside spring indicators of the single card type, reducing wheels and cord take-ups and planimeters of the direct reading type. Represented by W. L. Trill and Leonard T. McElroy. Space 638.

Tyler Company, The W. S., Cleveland, Ohio.—Draftac spark arrester, steel stack netting, iron, steel, brass, copper, phosphor bronze and galvanized double crimped wire cloth. Represented by L. D. Winters, M. P. Reynolds and W. P. Cahill. Space 642.

Underwood & Company, H. B., Philadelphia, Pa.—Portable cylinder boring bar, rotary boiler tube cleaner, belt driven pipe bender and straightener (Model), new heavy type valve seat rotary planer. Represented by A. D. Pedrick and D. W. Pedrick, 2d. Spaces 165 and 167.

Union Draft Gear Company, Chicago, Ill.—Cardwell friction draft gear. Cardwell rocker side bearings. Represented by J. R. Cardwell, L. T. Canfield, W. G. Krauser, J. W. Hathaway and J. E. Tarelton. Space 409.

Union Fibre Company, Winona, Minn.—Exhibition refrigerator car on tracks of the Philadelphia & Reading Railway on Mississippi avenue, near convention pier. In booth, model of Brown's collapsible tank for refrigerator cars and model of refrigerator car, showing the method of insulating refrigerators with linofelt. Represented by H. W. Leeds, J. H. Bracken and S. E. McPartlin. Space 236.

Union Manufacturing Company, New Britain, Conn.—Complete line of chucks. Represented by A. F. Corbin, M. L. Bailey, H. H. Wheeler, C. S. Neumann, E. I. Stevens and J. W. Carleton. Spaces 117 and 119.

Union Spring & Manufacturing Company, Pittsburgh, Pa.—Coil and elliptic springs, Kensington all-steel journal boxes, pressed steel journal box lids, pressed steel spring plates and steel castings. Represented by A. M. McCrea, L. G. Woods, C. S. Foller, H. B. Darlington, A. C. Woods, T. B. Arnold, W. F. LaBonta, H. F. Ayres, A. Pancoast and G. H. Channel. Spaces 538-540.

H. A. Varney, National Boiler Washing Co., Chicago, in executive session.

United Engineering & Foundry Company, Pittsburgh, Pa.—High speed steam-hydraulic forging press in operation on car, Mississippi avenue next to boardwalk. Headquarters, space 28, in main building. Represented by J. A. Eden, Jr. Space 28.

United States Light & Heating Company, The, New York City, N. Y.—Axle electric car lighting apparatus. Axle driven generators, truck suspensions, generator regulators, lamp regulators, storage batteries for car lighting, signals, telephones and central stations. Represented by D. W. Bye, J. Allen Smith, A. H. Ackermann, W. L. Bliss, W. A. Turbayne, W. P. Hawley, Frank Engel, C. C. Carpenter, C. L. Lane, W. G. Davis, E. F. Oates and A Russell. Spaces 374 to 377 inclusive.

U. S. Metal & Manufacturing Company, New York, N. Y.—"Empire" pressed steel truck bolster, "Owen-Cochran" pressed steel journal box, feasible drop brake staff Diamond tapered steel poles, Columbia lock nuts, "Galco" artificial lumber, Anglo-American varnish, shop cleaner, St. Louis Surfacer and Paint Company panels, M. C. B. repair card box, Detroit car door. Represented by B. A. Hegeman, Jr., Chas. C. Castle, J. J. Ross, F. C. Dunham, E. D. Hillman and H. A. Hegeman. Space 337.

United States Metallic Packing Company, The, Philadelphia, PaKing type metallic packing for locomotive piston rods and valve stem, and the same type for locomotive air pumps, United States multiangular metallic packing for locomotive piston rods and valve stems, Gollmar bell ringer, Leach pneumatic track sander, indestructible oil cup. Represented by Elliott Curtiss, Morris B. Brewster, C. B. Ford, John S. Mace, C. L. Mellor and Harry M. Woy. Space 643.

United States Radiator Corporation, Detroit, Mich.—Cast-iron heating boilers, cast-iron radiators, wall radiators, cast-iron tank heaters, car heaters, packless steam and water radiator valves. Represented by Frederick W. Herendeen, George C. Blackmore, George W. Barr, M. D. Keyes and Joshua Naylor. Space 308.

Universal Safety Tread Company, Boston, Mass.—Universal safety tread for car steps, stations, platforms and stairs, a new metal rack for cars. Represented by F. W. Langford and A. L. Whipple. Space 607.

Durbin Automatic Safety Car Coupler Co., J. T. Durbin, Pres.; V. S. Durbin, Mech. Engr.; C. T. Hunn, V. P.

J. Will (pronounced "Jaybill") Johnson and Miss Frances King of the United Booking offices arranging vaudeville matters.

Van Dorn & Dutton Company, The, Cleveland, O.—Hard Service (portable) electrically operated drills and reamers, V. D. & D. gears and pinions. Represented by F. W. Sinram, Franklin Schneider, A. N. Frecker, Robert Tinsley, North Storms, J. D. Granville and A. K. Baxter. Spaces 133 and 135.

Van Dyck Churchill Company, New York, N. Y.—Higley cutting off saw. Space 103.

Ward Equipment Company, New York, N. Y.—Car heating apparatus, steam heat equipment for locomotives, passenger car ventilators, yard plugs and car receptacles for charging storage batteries on electrically lighted cars, Ward steam couplers, end train line valves, unotherms and improved car heating material of all kinds. Represented by John E. Ward, George B. Culver, C. E. Lowell and Peter Fink. Spaces 553 to 556, inclusive.

Warner & Swasey Company, The, Cleveland, O.—Number 3A hollow hexagon turret lathe. Represented by A. C. Cook and W. E. Marshall Space 145.

Wellsbach Company, Gloucester, N. J.—Various kinds of railway lamps for use on platforms, stations and office lighting. Represented by Sidney Mason, Townsend Stites, F. N. Hamerstrom, T. J. Little, Jr., and C. W. Wardell. Spaces 42 and 44.

West Disinfecting Company, New York, N. Y.—Liquid soap dispensers, deodorizing machines, fumigating machines, automatic sprinklers, spraying machines and fluids used in above. Represented by Geo. L. Lord and H. E. Daniels. Space 516.

Western Railway Equipment Company, St. Louis, Mo.—Acme brake slack adjusters, car door fastenings, Downing card holders, Western brake jaws, brake pins, Western bell ringer, Acme pipe clamps, Western sill and carline pockets, fish hook tie plates, Linstrom syphon pipes, Republic draft gear tie dating nails, interchangeable car doors, Linstrom eccentrics, Hoerr car doors, Western flush car doors, Security dust guard, Western angle cock holders, Economy slack adjusters, St Louis flush car doors,

A Pressed Steel Car Co. Lineup. Left to right—H. E. Graham, Traf. Mgr.; W. C. Howe, Supt., Allegheny; C. W. Wrenshall, Supt., McKees Rocks; J. H. Hackenburg, Asst. Pur. Agt.; J. F. Streib, Mech. Engr.; P. M. Collier, Asst. to G. M.

Represented by Louis A. Hoerr and S. H. Campbell. Spaces 370, 371, 372 and 373.

Western Steel Car & Foundry Company, Hegewisch, Ill.—Exhibit with the Pressed Steel Car Company. Space 659.

Western Wheeled Scraper Company, Aurora, Ill.—Thirty cubic yard 100,000 pounds capacity Western air dump car for railroad construction and betterment work. Represented by M. E. Davis and J. B. Rhodes. Space, track.

Westinghouse Air Brake Company, Pittsburgh, Pa.—Empty and load brake demonstration rack, PC equipment demonstration rack, centrifugal dirt collector demonstration rack, PC equipment illuminated chart, Westinghouse brake test truck, Westinghouse enameled main reservoirs, galvanized annealed steel hose clamp, centrifugal dirt collector for 9½-inch compressor. Represented by A. L. Humphrey, W. V. Turner, E. A. Craig, F. H. Parke, H. E. Chilcoat, Robert Burgess, Joseph R. Ellicott, F. V. Green, F. M. Nellis, C. H. Larimer, S. J. Kidder, T. R. Brown, E. H. Dewson, F. H. Whitney, W. S. Bartholomew,

Exhibit of the Pneumatic Jack Co.

Pennsylvania Flexible Metallic Tubing Co.

C. J. Olmstead, E. L. Adreon and C. P. Cass. Spaces 27, 29, 31 and 136 to 146, inclusive.

Westinghouse, Church, Kerr & Company, New York, N. Y.—With the Westinghouse Air Brake Company exhibit.

Westinghouse Electric & Manufacturing Company, East Pittsburgh, Pa.—Alternating current and direct current motors, complete with control apparatus, for constant and varying speeds. Represented by Charles Robbins, J. H. Klinck, J. C. McQuiston,

Mark Ross, Pres., Pyle-Nat'l Headlight Co.

E. C. Peck, Gen. Supt. of Cleveland Twist Drill Co.

C. G. Tarkington, F. H. Herzsch, R. F. Moon and H. L. Vogel. Space 27,29-31 and 136 to 146; even numbers.

Westinghouse Lamp Company, Bloomfield, N. J.—Tungsten and carbon lamps for all standard voltages and of all standard sizes. Represented by B. F. Fisher, Jr. Space 27-29-31-136 to 146; even numbers.

Westinghouse Machine Company, East Pittsburgh, Pa.—25 K. W. turbo-generator outfit. Represented by L. L. Brinsmade and E. H. Sniffin. Spaces 27, 29, 31 and 136 to 146, inclusive.

Westinghouse Traction Brake Company, Pittsburgh, Pa.—With the Westinghouse Air Brake Company exhibit.

Wheel Truing Brake Shoe Company, Detroit, Mich.—Abrasive brake shoes for truing locomotive driver wheels and car wheels. Represented by J. M. Griffith. Space 629.

Williams All-Service Car Door Company, Clinton, Ill.—A box car door. Represented by M. L. Evans. Space 401.

Wilson Remover Company, New York, N. Y.—Paint and varnish remover. Represented by J. Mac Naull Wilson and J. Whitney Wilson. Space 222.

Wood, Guilford S., Chicago, Ill.—Wood's flexible nipple end protector. The monogram train pipe bracket. Represented by Guilford S. Wood, D. J. Jennings and S. G. Rea. Space 512.

Wood Locomotive Fire Box & Tube Company, The Wm. H., Media, Pa.—One Wm. H. Wood patent loco fire box, full size,

with balanced corrugated formation. Section of flanging. Represented by Wm. H. Wood and Fred H. Snell. Space 214.

Yale & Towne Manufacturing Company, The, New York, N. Y. —Chain blocks, trolleys, electric hoists and hardware. Represented by R. N. Hodgkins, T. J. White, W. J. Nahrwold, C. W. Beaver, A. W. Patterson, Jr., H. H. Ricketts, Forbes Liddell and H. C. Spaulding. Spaces 151 and 368.

Zug Iron & Steel Company, Pittsburgh, Pa.—Staybolt, engine bolt and forging irons. Represented by John H. McCloy and A. M. Brown. Space 232.

ADMIRAL SCHLEY VISITS CONVENTION.

Admiral and Mrs. Winfield Scott Schley spent Saturday morning, June 17th, at Atlantic City on the pier looking over the exhibits and meeting a number of railway and supply men and their families. The Admiral made a second tour of the exhibits Tuesday morning, June 20th. Both visits were under the escort of C. E. Postlethwaite, manager of sales, central district, Pressed Steel Car Co. In accordance with the Admiral's wishes, his visit was unannounced but an informal reception was held in the booth of the Pressed Steel Car Company. The surprise and delight shown by all who met the Admiral and Mrs. Schley indicated in no uncertain manner the pleasure and honor felt by the members and guests at the convention in having such a distinguished personage in their midst, and Mrs. Schley being with him was an added joy and privilege which will linger always in the minds of those who talked with them.

The interest shown by the Admiral in every detail of the exhibit created a new inspiration and a renewed interest in every man who had the pleasure of pointing out the innermost working of the big machine tools or the particular function of some car specialty.

The Admiral himself was greatly pleased at the wonderful progress that was shown by the exhibit and commented on the satisfaction he felt in having spent his life in the service of a country the progressiveness of whose people was so well illustrated by the exhibit which he had just seen and he quoted Scott's lines from "The Lay of the Last Ministrel":

Wm. Garstang, S. M. P., C. C. C. & St. L. Ry.; Admiral W. S. Schley.

Admiral W. S. Schley; C. E. Postlethwaite, Mgr. Sales Cent. Dist., Pressed Steel Car Co.

"Breathes there a man, with soul so dead,
Who never to himself hath said,
This is my own, my native land!
Whose heart hath ne'er within him burned,
As home his footsteps he hath turned,
From wandering on a foreign strand!"
Etc., etc.

The following is an extract from a letter dated July 5th, 1911, from the Admiral to Mr. C. E. Postlethwaite:

"Thank you very much for your letter from New York. I rather think that I am the favored one in being permitted, through your courtesy, to see so much that was both interesting and instructive during the convention, and I shall not cease to thank you for the great honor you did me in presenting me to so many of the splendid fellows representing the progressive spirit of our day."

Winfield Scott Schley was born near Frederick, Maryland, in 1839, and entered the Naval Academy in 1856. His career has been a most interesting one. He sailed to Japan in the vessel which conducted the Japanese embassy home in 1860. From that time history records many distinguished feats accomplished by Schley, and to him belongs the chief honor in the actual destruction of Admiral Cervera's fleet off Santiago, July 3rd, 1898. His whole record spells success and victory. At Atlantic City he captured the hearts of all who talked to him. He had some pleasing incident or story to tell each group of friends.

The accompanying illustrations show in unusual clearness Admiral Schley, Mr. Postlethwaite and Mr. Wm. Garstang, of the Cleveland, Cincinnati, Chicago & St. Louis Ry. All three are admirals of note, though the fields of endeavor represented by the two latter do not know their honored ones by that title.

Report the of Forty-Fifth Annual Convention of the Master Car Builders' Association

The Forty-fifth annual meeting of the Master Car Builders' Association was held in Atlantic City, N. J., June 19-21, inclusive.

MONDAY, JUNE 19, 1911.

The first session was called to order by President T. H. Curtis, at 9:30 a. m. Rev. Newton A. Caldwell opened the meeting with an invocation.

Address of President Curtis.

We are here assembled for the forty-fifth annual convention of the Master Car Builders' Association and, as its president, I take great pleasure in welcoming you. It is very gratifying to observe that the ladies have favored us with so large an attendance. Your presence is always beneficial and your smiling countenances are encouraging and inspiring. Surely no place affords more pleasure or diversion than Atlantic City, and we trust that your short stay here may be enjoyed to the fullest and that you will leave with the desire to meet with us another year. It is very pleasing to observe that so many of the members of the Association are present. Some have attended these meetings at various places for many years and have watched the growth and progress of the Association, while others are here on their initial visit. Be it far from any member to feel that his mission here is limited to what may be heard or said within these four walls. The time has passed when the progressive railroad officer may live entirely to himself—he must associate himself with his fellowmen and they, through their combined knowledge and strength, devise effective ways and means for the proper conduct of various departments. The Association's printed and bound record of proceedings contain a complete record of the reports of the various committees and the discussions that follow, and in them is recorded the progress that we make from year to year, and they may be considered annual markers indicating our progress in time as a milepost indicates the distance traveled.

The supplymen, who are truly captains of industry, are to be congratulated upon their fine display and their ever-pleasing manner in exhibiting the appliances which they represent. On this great pier and for some distance in one of the streets in this vicinity are to be found on exhibition railway equipment, appliances and supplies so extensive that if only a few moments' time were given to each important subject, it would require over a day to investigate. The opportunity to inspect these extensive exhibits should be considered a great privilege, as much knowledge for the betterment of railroad service may be gained therefrom.

The past year has been a very eventful one in the history of this Association and we have before us for immediate consideration several very important subjects. The twenty-fourth annual report of the Interstate Commerce Commission contains a report of the chief inspector, J. W. Watson, in the summary of which it is shown that in the year ended June 30, 1910, nearly a half-million freight cars were inspected and a little over 5 per cent. were found to be defective. When comparing these figures with those for the year ended June 30, 1905, in which about one-fourth of a million freight cars were inspected and over 22 per cent. were found to be defective, we have the comfort of knowing that an improvement was made, but there is still room for further effort. The comparative classified table of defective safety appliances on freight cars, for the year ended June 30, 1910, as to couplers and uncoupling devices, shows over 5,000 defective appliances. Over 1,500 of these defects were in the uncoupling chains. These could have been practically obviated by the use of a first-class chain that would not have cost over 15 cents. Over 2,000 more of the defects reported could have been righted within an average of one-half hour's time for each defect, and at a cost of not over 50 cents each. Over 6,000 cases of defects were reported in hand holds, ladders and sill-steps. Of this number, over 600 were for missing sill-steps and nearly 4,000 for missing hand-holds. These omissions are to be deeply regretted. As to air brakes, over 16,000 cases were reported, of which over 6,000 were for brakes cut-out and over for 2,000 for cylinder and triple valves not having been cleaned within the prescribed time. There were over 2,000 cases of release rods missing. These rods do not cost over 10 cents each.

Of the 16,000 defects cited, 10,000 of them could have been repaired by detaining the car from service only a half-day at the most, and these repairs would have required only labor and they would not have required the services of large shops and machinery. The greater portion of the defects mentioned could have been obviated by greater care and supervision, and this supervision should have come from the higher officers. They should have known that the car men were properly instructed and drilled in regard to the importance of properly applying and maintaining safety appliances.

The matter of proper application and maintenance of safety appliances is of great importance. On July 1, 1911, the United States safety appliance standards as set forth in the order of the Interstate Commerce Commission of March, 1911, will become effective. While these standards may not be looked upon favorably by some, they are the result of many conferences and hard work by a committee of inspeciors for the Interstate Commerce Commission and the general committee of railways on safety appliance standards, composed of members of our Association, the American Railway Association and others, and it is to be hoped that every effort will be put forth on the part of the members of this Association to familiarize themselves with these standards with a view to properly applying and maintaining them. And, furthermore, I urge you to co-operate with the Interstate Commerce Commission representatives, and by this co-operation the object of the law will be attained and uniformity will be the result, as well as good feeling between all concerned. One resut of the enforcement of the saftey appliance law will be the bringing into use of common standards for safety appliances for all classes of rolling stock equipment, regardless of the ownership of the equipment, whether it be a railway company or a private car line.

A common standard in railway equipment, which is being interchanged, is a necessity—it is the need of today. To further profit by a common standard for equipment it is earnestly recommended that the Master Car Builders' Association speedily adopt a standard M. C. B. car coupler, and that this coupler must be standard in all of its parts, and every railway to use it only. The day of experimenting with car couplers is past, the state of the art has reached its maturity. A common standard for a car coupler will reduce the great number of repair parts that are now required to be kept in stock all over these United States for repairs to the great number of different styles of the M. C. B. car coupler, which is now a standard only in its contour lines. In brief, the M. C. B. coupler of today is standard in service, but interchangeable only as a whole, as the various makes are widely different in details of construction. To facilitate the prompt movement of traffic and also raise the standard of efficiency and reduce the cost of operation, a standard M. C. B. coupler is a very present need. This subject of a standard car coupler was earnestly recommended by one of my worthy predecessors in his address to our Association.

The day for small or light capacity freight train cars, as well as passenger equipment cars, is about past. So-called heavy or large capacity are now being built extensively, and some have been in operation for a long time. In some cases the strains are possibly exceeding the limits of safety for certain kinds of material that have been heretofore commonly used. As a caution I will mention car wheels. The steel car wheel is now considered by some large railway companies to be a necessity. I will not comment on the steel car wheel or on the different kinds or makes and their mission in railway equipment of today, but will say that the time is at hand when something should be done by this Association in prescribing and requiring that under all heavy capacity cars an efficient and suitable car wheel must be used. The common cast-iron car wheel of a grade used under light cars with good results needs to be materially increased in its strength and stability if it is to be used in service under heavy capacity cars of today.

The increase in capacity of cars has necessarily increased the light weight of the car, and therefore made necessary the increase of the pressure on the brake shoe. For safety alone all brake shoes should have some kind of a wrought-iron or steel binding member constructed in the brake shoe to prevent the dropping of a piece of the brake shoe on the track should the shoe crack or break and a portion of the shoe fall to the roadbed. The all cast-iron brake shoe does break in pieces in service. It should be replaced by a modern up-to-date brake shoe, thereby increasing the safety of train operation, and I know it will not increase the cost of operation. This change to a modern brake shoe will effect economy and increased efficiency.

For safety all breake beams should have efficient safety hangers, and these safety hangers or their equivalent should be required on all cars offered in interchange. The best design of brake hangers will break once in a while, and there should be a close second hanger or safety device to prevent the brake beam from falling on the track. When a brake beam falls on the track while the car is in motion the results are more or less disastrous.

Some contentions have arisen during the past two years or so regarding M. C. B. standard air brake hose, incident to the enforcement of the rule requiring the use of standard 1⅜ in. air brake hose properly labeled. After the adoption of the specifications and label, the date for complying with the standard was set forward on three different occasions, and it was not until September 1, 1910, that it became obligatory to have the standard hose on cars offered in interchange.

As it was not until about three years after the adoption of the specification and label as a standard that it was obligatory to equip cars with this hose, or, in other words, as three years' time had been allowed in which to properly equip cars with suitable hose, the officers of our Association did not feel that it would impose any sudden hardship upon the railways. However, it was a great surprise to many to learn, after having become better acquainted with the situation, that many of the roads had paid little or no attention to the purchase of hose as required by the Master Car Builders' Association. Some of the roads were placed to a large expense to apply the proper hose, which could have been obviated by buying the standard M. C. B. hose. Since September 1, 1910, practically all cars have been equipped with the standard hose, and this subject may now be considered as closed, but it is hoped that all will learn the lesson of the necessity for complying with the Master Car Builders' standards and avoid a recurrence of unnecessary expense due to deviating from the standards, even though the deviation may be slight.

For several years the subject of the consolidation of the M. M. and M. C. B. Associations has been under consideration. Consolidation is a subject for each member to give sincere consideration, for it may materially affect him. In detail of subjects the two associations widely differ, and yet both locomotives and cars are used in the same train, and under the same management. One would not consider a detail knowledge of the car department as fitting him for detail service in the locomotive department or vice versa. We now have two associations to deal with two departments, which are different in detail. In the American Railway Association the railways have the consolidation of these two departments; that is, the locomotive and the car department, and this association includes many other departments. The American Railway Association is the executive head of all associations like the Master Mechanics' Association, Master Car Builders' Association and others, and therefore, it may not be wise or necessary to effect a consolidation of the M. M. and M. C. B. Association, especially as one of the associations that would form a part of the consolidation is not executive, and the other is not executive except in a limited degree.

If these two associations are consolidated and possibly called American Railway Mechanical Association, as suggested, it will be composed largely of the men that are now members of these two associations. This would possibly be very satisfactory to the men occupying the higher position in railway service, but there would probably soon be formed two other associations, one of the subordinate heads of the locomotive department, and the other the subordinate heads of the car department, and these two associations would take up separately in detail those subjects that are close to the trade in which they are earning their livelihood, the same as the master boiler makers and master blacksmiths now consider subjects in detail that are close to their trade. This subject of consolidation needs much careful thought and consideration on your part, and all matters should be fully weighed before any definite action is taken.

In my remarks I have mentioned a few of the important subjects before us for consideration, each of which requires close application, study and care in order to derive any benefit therefrom, but, aside from the great benefit to be derived in this manner, there is also much to be gained by encouraging the social side of this occasion. There are many points of interest in this vicinity, with enough diversion that all may find a source of pleasure and recreation. Also, the entertainment committee has provided for us a most extensive and delightful program. This committee has spared no care or effort in looking after every detail. We are also indebted to the hotel men and to the city officials for having extended to us so many favors looking toward our comfort. It is said that "All work and no play makes Jack a dull boy." Therefore, do not let us work all the time. May we get into closer touch with our fellow-men by attending the social events, and when the convention is adjourned, go home recuperated both in mind and in body and be better fitted for our daily duties.

Secretary's Report.

Secretary Taylor then presented his report which showed that the active membership in June, 1910, was 377. Since that time there have been transferred to representative membership 9, dropped out of railway service 3, resigned 2, deaths 3, transferred to life membership 1, 18 in all, leaving a balance of 359. There have also been transferred from representative membership to active membership 4, new membership 59, total 63, making the active membership June, 1911, 422. The representative membership in June, 1910, was 322, dropped on account of absorption of roads 3, dropped on account of successor appointed 25, dropped on account of being out of railway service 3, dead 4, 35 in all, leaving a balance of 297. There have also been transferred from active membership 9, new representatives, new roads 19, new representatives from old roads 36, total 64, making the representative membership June, 1911, 361. The associate membership remains at 13. The life membership in June, 1910, was 22. During the year four life members have died and one has been elected, making the present membership 19. The total membership in June, 1911, is 815.

The number of cars represented in the association compared with 1910 is as follows: June, 1910, 2,298,633; June, 1911, 2,464,530, an increase of 165,899. During the year 23 roads and private car lines have signified their desire to become subscribers to the rules of interchange governing freight cars, and one road has advised of its acceptance of the code of rules governing the interchange of passener equipment.

The report of the treasurer showed that the receipts during the year had been $17,220.76, and the expenses had been $17,213.37, leaving a balance of $7.39. The amount of unpaid dues is $992, and a list of the delinquent members is attached to the report of the secretary. The association has a surplus fund of $1,126.20.

The report of the secretary and treasurer was referred to an auditing committee made up of T. H. Goodnow (L. S. & M. S.), J. W. Fogg (B. & O. C. T.) and C. D. Young (Penn.).

The president named as members of the obituary committee the following: For J. E. Cowan (D. & H.), J. H. Manning; for G. P. Sweeley (Penna.), W. C. Arp; for J. J. Connelly, Wm. Garstang; for F. O. Bray (L. S. & M. S.), D. R. MacBain; for A. C. Robson (Ill. Cent.), F. W. Brazier; for J. E. Dorn (B. & A.), R. D. Smith; and for Jas. Denver (N. Y., N. H. & H.), G. W. Wildin.

The annual dues was fixed at $4 per vote, the same as heretofore.

The president named as the committee on correspondence and resolutions Messrs. T. H. Goodnow, J. F. Walsh and J. F. Enright.

Prof. Edward C. Schmidt, of the University of Illinois, has made application for associate membership, which under the constitution will lay over until the next annual convention.

J. W. Marden (B. & M.) and J. W. Flemming (C. & O.) have been proposed for life membership.

F. W. Brazier (N. Y. C.): It is a well-known fact that many members decline to serve on committees, stating as the fact that they cannot devote the time to the work; and I regret to say that there are many officials of railways that do not seem to be willing to let members devote time or any little expense to committee work. At the same time, these same officials and railway companies derive benefit from the work that is done by others. The past year has been one of the busiest years for the officers of this association in its history. You are all aware of the safety appliance law which went into effect this year, and most of you know that there was a general committee appointed, who visited Washington and worked with the government representatives. Finally, at a hearing before the Interstate Commerce Commission, they very wisely referred the matter back to a conference committee, consisting of five railway members, five of the government inspectors and representatives of the labor organizations. This conference committee spent almost a month's time in going over the safety appliance law with the other representatives, and were able to arrange modifications mutually satisfactory to all the parties in interest, which will save the railways of this country a few million dollars without impairing, even in the slightest way, the efficiency of the safety device. The meetings were conducted so harmoniously that when the final hearing came before the Interstate Commerce Commission every point that was raised was agreed to, an extension of time was given on the old equipment, and concessions that were made on the present equipment were such that all the railways of this country and private lines as well will reap the benefit of their labors.

This association is indebted to its president, Theodore Curtis; Mr. Gibbs, of the Penna. R. R.; Mr. Fuller, of the Union Pacific; Mr. Seeley, of the Rock Island Lines, and Mr. Beems, of the N. Y. Central Lines, for the faithful manner in which they attended to their duties and for the good feelings which they brought about with the government inspectors. It should bring the blush of shame to any railroad official or any member of this association who dares to say they do not have time to attend to the duties of committee work that has been done by the committee I have mentioned and others that were on the general committee.

This association has been more or less criticised for having standards and recommended practices which have not been followed. No doubt the individual members of the association have not been to blame for this; some officials have purposely ignored them and, gentlemen, we are paying dearly for it at the present time, because had the M. C. B. Rules and Recommended Practices been followed out more closely the present drastic laws would never have been passed; consequently to show the feeling that this association has towards this committee, that has done this hard work, I move that we extend to them our sincere thanks for their laborious duties and the very pleasant way in which they represented this association and brought about the good feeling between the government officials and the railways.

The motion was unanimously carried by a rising vote.

H. H. Vaughan (C. P.): I wish to make a request that this association established a standard or limiting the height for the running board of a standard dimension box car. I will put it in the form of a motion and move that the matter be referred to the committee on standards for its consideration. The standards of this association prescribe a height for the eaves of a box car with standard inside dimensions, but do not prescribe any standard height for the running board. The matter has been brought before the Canadian Railway Commission in connection with bridge and tunnel clearance, and, at the meeting at which it was presented to them, the question arose that this association had never established any standard height for the running board of box cars. I understand that the matter is to a certain extent already in the hands of the American Railway Association, but at the same time I see no objection to the committee on standards corresponding with that association and ascertaining if it would be satisfactory to them for us to take this matter up.

R. L. Kleine (Penna.): We now have a specified height for brake shaft—that is, 14 ft. 2 in., if I am not mistaken—and the safety appliance law requires 14-in. clearance underneath the brake wheel, and that would practically make the maximum height of the running board 13 ft. 10 in. according to present standards.

Mr. Vaughan: There is practically no difficulty, and I think I am correct in saying that almost no cars today exceed a height of 13 ft. 6 in., and the difference between that and 13 ft. 10 in. is worth having, as a matter of saving, if we can get it.

C. A. Schroyer (C. & N. W.): I think it is necessary that a committee should be appointed on that subject, because we are limited in the height of our cars by the brake wheel. We must have a clearance between the brake wheel and top of the running board, and we can go to within these limits, so that a committee appointed on that subject would not be able to accomplish anything more than is now accomplished by the limits prescribed.

C. A. Seley (C., R. I. & P.): I think what Mr. Vaughan seeks is merely a statement in the standards of the height, no matter how derived. I think that is within the province of the committee on standards to take that up and include it in their report.

Mr. Kleine: Do I understand, Mr. Vaughan, that it is the maximum height of running board that you want fixed, or is it a uniform height?

Mr. Vaughan: I think we should fix a maximum height in the standards. The height of the brake wheel does not affect this. It is the height of a man standing on the running board that we are after. In Canada there is a movement to fix the height of bridges at 22 ft. and we think they should be 20 ft., as we assume

that we are not going to have brakemen who will be over 6 ft. 6 in. tall, standing on a running board 13 ft. 6 in. in height, so that everything we can get out of that is in value in grade crossing work if they are going to insist on clearances enough for a man to stand on top of an ordinary car.

G. W. Wildin (N. Y., N. H. & H.): I believe there should be some limit in the matter of cleaning the triple valves of air brakes. I do not believe, if a road properly cleans that triple valves, that they should be required to pay for another cleaning done within 15 days of the original cleaning. As it stands now, you have got to pay the bills if the arbitration committee says so. I think there should be some reasonable time set as a limit in this matter, and that an owner shall not be required to pay for a second cleaning of the triple valves until after the expiration of a stated period.

Mr. Seley: I do not know whether it is the proper time to bring this matter up, but I will give notice that it is my intention, if it is proper to do it at that time, to introduce in the discussion of the coupler committee report the question of the abrogation of the standard of the association as regard the top lock. I have always considered that this association made a mistake in standardizing the top lock coupler. That has been emphasized this morning in the president's address, quoting from the action of the Interstate Commerce Commission; and whether it is proper to take it up now or in connection with the report of the committee, I cannot say, but I would like to give notice of my intention to make a motion at the proper time to reconsider that matter as a standard.

The President: Mr. Wildin, did you make a motion about the triple valves?

Mr. Wildin: My motion is that the matter of cleaning the triple valve be referred to the Committee on Interchange, so that there will be a minimum limited time in which the owner will be required to pay for cleaning the triple valve. Mr. Scroyer: I think that is unnecessary, unless we want to change the present limit. If a triple valve has not been cleaned inside of a year, a foreign line can clean it and charge the owners. Unless you want to reduce that time I think the motion is unnecessary.

Mr. Wildin: Mr. Schroyer does not understand what I am getting at. For instance: You clean a triple valve today, and we pay you for it. In 30 days the car goes over to the C., M. & St. P. and they clean it, and we will have to pay for it. I have had something like 50 cases in the last year, and when I referred the matter to the arbitration committee, to see where the matter stood, they have said, "You will have to pay the bill." There seems to be no limit now.

T. L. Burton (C. of N. J.): I think this question that Mr. Wildin brings up probably originates from an improper cleaning, rather than of a too frequent cleaning of the triple valve. The rule states specifically that the work can be done and charged to the car owner once a year or when the brake is inoperative. I have found, as I have no doubt Mr. Wildin has found, that this work is sometimes done improperly, and then when the car reaches the Milwaukee road to which he refers, the brake is inoperative and it is up to the road to put it in order. It is also true, unfortunately, that when that work is done the cars are not always stenciled when the valve is opened up and cleaned. I think it is a question of improper cleaning, rather than too frequent cleaning.

Mr. Wildin: I think the road makes the improper repairs or cleaning should not be paid for the work, and if it is necessary to clean the valve again within 30 days, the road which cleans the valve the last time should be paid, and the road which cleaned it the first time should not be paid. I know it is a matter of improper cleaning and that is where the whole trouble arises; for if the triple valves were properly cleaned they would not require cleaning again so soon.

W. F. Bentley (B. & O.): I want to endorse largely what Mr. Burton says. I think a very great deal of the work is done improperly, not by reason of improper cleaning, but by reason of the people cleaning the triple valves out in the yard at the cars, without putting the valves on the testing rack to know whether they are properly cleaned or not. By a careful checking of a large number of triple valves on the test rack—the improved test rack of the Westinghouse Company—it will be found that about 35 per cent of the valves, after cleaning, will not stand the test, and yet if these valves are not properly tested they are put on the cars just the same. If you put the triple valves on the cars out in the yard, the inspectors and others who might do the cleaning will not be able to detect whether the valves are properly cleaned or not by any tests which they will be able to make in the yard. If the triples were tested on the test rack very different results would follow. This is a matter which should be given careful consideration.

T. H. Goodnow (L. S. & M. S.): I believe, in line with Mr. Wildin's remarks, that if the committee which handles this subject will embody in its report a requirement that the name of the road making the repairs to the triple valve, as well as the date, shall be stenciled on the hose, it will go a long way to checking this matter, without complicating the work, and then those who do the work the second time will have the information to give the car owner when a question of this kind comes up. At the present time it is almost impossible to locate the road which did the improper work. By having the additional stencil, showing the initials of the road which did the work the first time, it will protect the car owner from the effects of this improper work. I would like to have that included in the consideration of the question.

Wm. Garstang (C., C., C. & St. L.): We have a committee on train brake and signal equipment, and I would move that the question of the cleaning of triple valves, as brought out in this discussion, be referred to this committee for consideration and recommendation.

The President: Mr. Wildin, do you accept that?

Mr. Wildin: I will accept anything to get the matter before the convention.

The President: Gentlemen, you have heard the motion made by Mr. Wildin to refer this subject to the committee on train brake and signal equipment. (The motion was carried.)

C. A. Seley: Do I understand what I had to say will be taken up when the report of the committee on coupler and draft equipment is considered?

The President: Yes.

The committee on nominations made the following nominations: For president, A. Stewart, C. S. M. P., Southern; C. E. Fuller, Asst. Gen. Mgr., Union Pacific, and D. F. Crawford, G. S. M. P., Penna. Lines West, Pittsburg. For vice-president, A. Stewart, G. S. M. P., Southern; C. E. Fuller, Asst. Gen. Mgr., Union Pacific; D. F. Crawford, G. S. M. P., Penna. Lines West, Pittsburg; M. K. Barnum, G. S. M. P., Illinois Central; R. E. Smith, G. S. M. P., Atlantic Coast Line, and D. R. MacBain, S. M. P., L. S. & M. S.

Revision of Standards and Recommended Practice.

1. After due consideration of present standards and recommended practice of the association, together with replies from members to the circular of inquiry and requests involving standards presented the secretary, the committee reports as follows:

Standards.

Journal Boxes and Details.

Pages 694 to 696, Sheets M. C. B. 1 to 13.

2. A member suggests that sections for journal bearing, Sheets M. C. B. 1, 3, 4, 6, 7, 9, 10, 12 and 13, should show the section of the side guide at the center for journal bearings, arranged similar to each other instead of being lighted from above on some and from below on others. The committee while appreciating that this would make all the journal bearings uniform, at the present time the 3¾-in. by 7-in. and 4¼-in. by 8-in. journal bearings are lightened from below and the 5-in. by 9-in. and 5½-in. by 10-in. journal bearings are lightened from above, and as this in no way affects the journal bearing it is thought that the expense incurred in changing patterns, drawings and standards is not warranted.

Journal Boxes and Details.

Sheets M. C. B. 8 and 11.

3. A member suggests that the opening in the rear wall of 5-in. by 9-in. and 5½-in. by 10-in. journal boxes are reduced so as to give some protection for the dust guard, and submits sketch showing the openings recommended.

The committee does not approve of this suggestion, as these walls have but recently been enlarged by a vote of the Association in order to prevent the walls of the boxes being broken out.

Journal Box and Details.

Page 696, Sheet M. C. B. 11.

4. A member suggests the following: Journal boxes for the heavier capacity equipment are being made of pressed and cast steel, and in order that the standards may be up to date, the following changes in the notes on Sheet 11 are recommended:

Section of box may be made either circular or square below the center line and material may be cast iron, malleable iron, pressed steel or cast steel; provided all the essential dimensions are adhered to. When journal box is made of material other than cast iron, reduction in thickness of metal and coring to lighten weight is permissible, provided all the essential dimensions, which affect interchangeability and the proper fitting of contained parts are adhered to. If the method of manufacture does not permit of placing the letters "M. C. B." on the side of the journal box they may be placed on the top between the hinge lug and seat of truck sides.

The committee suggests that they be referred to letter ballot.

Axles.

Sheet M. C. B. 15.

7. A member writes as follows: "We have under consideration, at the present time, the question of marking some cars 115,000 lbs. capacity, and using under them 5½-in. by 10 in. axles. We know that under Markings for Tank Cars it is allowable to mark the maximum weight of the car, including the car and lading, 161,000 lbs., and will use an axle with a minimum journal 5 in. in diameter. We are already marking some cars 115,000 lbs. capacity having 5½-in. by 100-in. journals, which car will weigh, when light, about 44,000 lbs., making total weight of car and lading about 159,000 lbs., but these car bodies, which are used in coal service, can hardly be loaded in excess, while the coke cars we now have under consideration could very readily be loaded in excess with coal.

"We would like to know if we would be safe in marking these new coke cars 115,000 lbs. capacity, or whether we should mark on them the maximum weight of the car and lading, and if we presume upon taking these axles out when the diameter reached about 5¼ in., what would be the maximum weight that we could mark them and still have them pass the interchange points without any trouble?"

Your committee would call attention to Rule 86 of the Code of Rules Governing the Interchange of Cars, which provides two methods of marking cars to indicate the load limit on axles. In both of these tables the limits for the 5½-in. by 10-in. axle under the heading of Capacity Car and Maximum Weight are precisely the same, but these limits are varied for the smaller axles. The various railways, as far as can be learned, have not followed the marking of maximum weight, excepting for tank cars, but adhered to capacity marking, usually allowing 10 per cent overload. The published tariff rates which cover minimum carload weights refers to cars of various capacities, and if the cars were to be marked maximum weight some objections might be raised by the traffic people, furthermore, the present prevalent method

of marking capacities has been in use a great many years and is thoroughly comprehended and understood by the various departments of all railways throughout the country, and any change at this time would have a tendency to lead to confusion, auditing systems would have to be revised and changed and likewise the stenciling on the majority of the cars in the country. Notwithstanding this, cars should be permitted to be loaded to the carrying capacity of the axles, and it is a question as to how this can be accomplished without seriously affecting both the traffic and motive-power departments.

The committee is not in favor of having more than one limit for the minimum diameter to which the journal and wheel seat may be worn, as this would lead to too much confusion in the shops. It is thought that without increasing the present number of axles and without changing the minimum diameters of journal and wheel seat, the present table of capacity markings for cars could be so amended as to permit variations in the capacity markings of the cars (minimum variations 5,000 or 10,000 lbs.) by adding to the table the maximum load for which the representative axles were designed, and by deducting from this maximum load the light weight of the car and the overload of 10 per cent, which would give the correct capacity to be stenciled on the cars. For the consideration of the members before any definite action is taken.

Limit Gages for Inspecting Second-Hand Wheels for Remounting.
Page 702, Sheet M. C. B. 16-A.

8. A member suggests the following: "Referring to discussion at M. C. B. meeting relative to advancing from Recommended Practice to Standard, gage for accepting second-hand wheels, would advise that on referring to page 637, M. C. B. Proceedings 1909, it will be noted these gages were proposed in 1907 and since then have not been changed in contour, the condemming height of both gages being 1 5-16 in. Width of old 1⅛-in. flange, this represents a wear of only 3-16 in. in the original chill, but with the present 1-in. flange this represents a 5-16 in. wear into chill. Specifications for M. C. B. wheels state that the chill at the throat shall be in no case more than 1 in., nor less than ⅜, 7-16 and ½ in., respectively, on the 625, 675 and 725-lb. wheels. Taking the minimum chill, therefore, as ⅜ in. on light wheels with an encroachment of 5-16-in. wear before condemming would leave only 1-16-in. chill on this wheel when the wheel is remounted second-hand. In the same way the 675-lb. wheel would have ⅛-in. chill remaining and the 725-lb. wheel would have 3-16-in. remaining.

"It would seem to us that the committee had overlooked the point that the flange had been reduced ⅛ in. in height."

The chairman of the wheel committee advises that the change should be made as suggested.

The committee, therefore, recommends:

A. That the note under limit age shown on Sheet M. C. B. 16-A be changed to read: "For remounting cast-iron wheels cast prior to the M. C. B. standard tread and flange adopted prior to 1909.

B. That drawings be added showing the limit gage for cast-iron wheels with M. C. B. tread and flange adopted in 1909, reducing the limit for height of flange from 1 5-16 in. to 1 3-16 in., and a note added under these gages reading as follows: "For remounting cast-iron wheels with M. C. B. standard tread and flange adopted in 1909."

Air Brakes—General Arrangement and Details.
Pages 706 to 708, Sheet M. C. B. 18.

11. A member suggests that to conform to U. S. Safety Appliance Standards the paragraph referring to hand-brake chain should be changed.

The committee approves this recommendation.

12. A member suggests that the double hand-brake arrangements shown on Sheet M. C. B. 18 do not conform to requirements of the Interstate Commerce Commission, and should be made to work with the air.

The committee referred this matter to the committee on train brake and signal equipment for the necessary attention.

Air Brakes—General Arrangements and Details.
Pages 706 to 708, Sheet M. C. B. 18.

14. A member suggests that the distance from the inside face of M. C. B. coupler knuckle to the center of air-brake angle cock shown on Sheet M. C. B. 18 should be changed from 13 in. to 11 in. to agree with the Air Brake Association recommendation.

The committe does not approve.

Air Brakes—General Arrangements and Details.
Pages 706 to 708, Sheet M. C. B. 18.

15. A member calls attention to the following: Relative to brake-lever connection, Sheet M. C. B. 18, this cut shows the connection to be round iron or steel not less than 1⅝-in. diameter. This is the only reference I know of in regard to the material and construction, and I feel sure that it is but little understood by railway men in general. Some railways are making this connection of cast steel in the star section in the center the same as is used in malleable iron. If this connection is to be seriously considered as an M. C. B. Standard it should be plainly brought out.

Committee would call attention to text on page 708, reading as follows: "In 1900 the use of malleable iron construction was discontinued providing that the truck connection be made of round iron or steel not less than 1⅝-in. in diameter." This would indicate that the rods were to be made of 1⅝-in. wrought material, although cast steel is not prohibited.

The committee believes that cast steel of proper section is suitable for truck-lever connection and would suggest that a note be added to Sheet M. C. B. 18, reading as follows: "Cast steel may be used for truck-lever connection if of equal strength to the section of wrought iron or steel specified."

Label for Air-Brake Hose.
Pages 712 and 713, Sheet M. C. B. 18.

16. A member suggests the following: Page 709, seventh paragraph, the size of hose and the letters A and R, as well as numerals indicating month hose was applied or removed are not covered in the specifications. To cover the size of hose and after the word "purchaser" in third line the words, "and the size of the hose 1⅜ in."; and to cover the date applied and removed add after "standard" in fifth line the words, "also in the center field the letters A and R to the left and the numerals as shown to the right."

This information should also be shown in paragraph referring to badge plate under specifications and test for woven and combination woven and wrapped air-brake hose.

Show size of hose on label as per sketch submitted instead of as shown on pages 709 and 712, Sheet M. C. B. 18.

The text under heading "Label for Air-Brake Hose," page 712, should also include the size 1⅜ in. and M. C. B. Standard as shown on Sheet M. C. B. 18.

The committee recommends that the label and text (paragraph 7, page 709) referring to same be omitted from the specifications for air-brake hose and placed under the label for air-brake hose, paragraph 7, to be changed to read as follows: "Each length of hose must have vulcanized to it the label for air-brake hose of white or red rubber as shown under the specifications, Label for Air-Brake Hose. Each lot of 200 or less must bear the manufacturer's serial number commencing at one on the first of the year, and continuing consecutively until the end of the year. For each lot of 200, one extra hose must be furnished free of cost.

17. Change second paragraph on page 711 under the heading of "Specifications and Tests for Woven and Comibination Woven and Wrapped Air Brake Hose" to read: "Each length of hose must have vulcanized to it the label for air-brake hose of white or red rubber as shown under the specifications 'Label for Air Brake Hose.'"

18. Change second paragraph under the heading "Label for Air-Brake Hose," page 712, to read: "Each length of hose must have vulcanized to it a standard air-brake hose label of white or red rubber as shown. The following information must be branded on the label: On the top of the badge the initials or name of road or purchaser and the size 1⅜ in.; on the bottom the name of manufacturer; on the left-hand end the month and year of manufacture; on the right-hand end the serial number and the letters M. C. B. Standard; and in the center field the years, letters A and R, and the numerals for the month to show the date of application and removal. These letters and figures must be clear and distinct, not less than ¼ in. in height, excepting name of manufacturer, which must not be less than ⅛ in. in height, and stand in relief not less than 1-32 in. Letters and figures covering the aplication and removal of the hose must be so applied that they can be removed by cutting without endangering the cover."

Dimensions of label to be 4 in. by 2½ in. Extensions may be made on right-hand end.

No change has been made in the air-brake hose label aside from increasing the size of letters and numerals from 3-16 in. to ¼ in. in height, and name of manufacturer, which has been specified to be not less than ⅛ in. in height. The text has been revised to correspond with label.

20. A member suggests that we should add a paragraph to the specifications, Label for Air-Brake Hose, page 713, to cover fitting up hose to the couplings and nipples so that the label on the hose will show toward the side of the car in such a position that the car inspectors can readily read the label from the side of the car.

The committee concurs in this suggestion and refers it to letter ballot for adoption as Recommended Practice.

Safety Appliances.
Pages 715 to 722, Sheets M. C. B. 19 to 19-B.

24. A member suggests to adopt Recommended Practice for brake details shown on Interstate Commerce Commission Plate "A" as follows: "Brake wheels, both flat and dished, 15 in. and 16 in. diameter; brake ratchet wheel, brake ratchet-wheel pawl and brake ratchet-wheel pawl plates."

25. A number of members suggest that the text and sheets be revised to conform to Interstate Commerce Commission requirements.

The committee approves these recommendations and suggests that the U. S. Safety Appliance Standards adopted March 13, 1911, by order of the Interstate Commerce Commission be substituted for the present Standards.

Arch Bars for 100,000-lb. Capacity Cars.
Page 723, Sheet M. C. B. 20.

26. The 1½ in. by 5 in. arch bar for 100,000-lb. capacity truck, which was adopted as a Standard in 1909, is giving trouble, due to failing through the bottom column bolt hole. The 1¼ in. by 6 in. arch bar used by some roads for the 100,000-lb. capacity truck is reported as giving good service.

As it would appear that the present standard is unsatisfactory, the committee would recommend that this question be referred to the Committee on Freight Car Trucks, with instructions to investigate what practical results have been obtained with both the 1½ in. by 5 in. and 1¼ in. by 6 in. arch bars, and make recommendations for any necessary revision of the present standard.

Automatic Couplers.
Pages 724 and 725, Sheet M. C. B. 23.

27. Several members recommend the following:

During the 1910 convention it was recommended to the committee on standards and recommended practice the addition of 8½-in. coupler butt, for the reason that the 6½-in. coupler butt was designed to use with the 6¼-in. by 28-in. draft springs, allow-

ing ¼-in. clearance. Again the 9⅛ in. butt was designed to accommodate certain friction draft gears, requiring that width within the yoke. This recommendation was submitted to letter ballot and rejected, the vote being 1,191 yes and 614 no, total vote 1,805, necessary votes for adoption 1,203, or within 12 votes of carrying same. Inasmuch as there are thousands of cars equipped with the M. C. B. Class "G" springs, the 6½-in. butt is not sufficient in depth, and not being good practice to use liners between the butt and yoke ends (the diameter of Class "G" spring being 8 in.), and, furthermore, this spring cannot be used with the 9⅛-in. butt as the clearance is too great, also the spring would not be central. Believe the matter should again be submitted to the M. C. B. Committee with a view of urging the adoption of the 8½-in. butt as standard.

The committee does not approve of this recommendation.

Height of Couplers.

Page 737.

31. A member suggests the following: We would recommend that the paragraph reading, "The standard height of couplers for passenger equipment cars is 35 in. from top of rail when car is loaded," be modified to conform to the Safety Appliance Act of March 2, 1893, No. 113, amended April 1, 1896, which reads as follows: "Note—Prescribed Standard Height of Draw Bars; standard gage roads 34½ in.; narrow-gage roads 26 in.; maximum variation between loaded and empty cars 3 in.," in other words, the standard height of 35 in. specified for passenger cars should be changed to 34½ in.

Also, in the second paragraph we should add a clause to cover the standard height for narrow-gage cars to be 26 in., minimum 23 in., and on 2-ft. gage railways maximum height 17½ in., minimum height 14½ in.

The committee suggests that the text be modified to conform to the order of the Interstate Commerce Commission dated October 10, 1910, reading as follows: "The maximum height of drawbars for freight cars measured perpendicularly from the level of top of rails to the centers of drawbars for standard-gage railroads shall be 34½ in., and the minimum height of drawbars for freight cars on such standard-gage railways measured in the same manner shall be 31½ in., and on narrow-gage railway the maximum height of drawbars for freight cars measured from the level of tops of rails to the centers of drawbars shall be 26 in., and the minimum height of drawbars for freight cars on such narrow-gage railways measured in the same manner shall be 23 in., and on 2-ft. gage railways the maximum height of drawbars for freight cars measured from the level of the tops of rails to the centers of drawbars shall be 17½ in., and the minimum height of drawbars for freight cars on such 2-ft. gage railways measured in the same manner shall be 14½ in.

Sliding, Flooring, Roofing and Lining.

Page 738, Sheet M. C. B. 26.

33. A member calls attention to the details of siding, roofing, lining and flooring, Sheet M. C. B. 26, which shows the corners of the tongue of sheathing, roofing, lining and flooring as being square. With the tongue square, it is difficult to have the same enter the grooves, and, therefore, recommends that the drawings be changed to show the corners taken off of the tongue.

The committee approves of this suggestion.

Recommended Practice.

Journal Box and Pedestal for Passenger Cars for Journals 5 in. by 9 in.

Page 755, Sheets M. C. B.—A. and B.

The committee recommends the following:

(a) Sheet A, 5-in. by 5-in. passenger journal box, change mouth of box and dust-guard opening to conform to freight box and advance to Standard.

(b) Pedestal for 5-in. by 9-in. journal box shown on Sheet B advance to standard.

Pedestals for Passenger Cars for 5-in. by 9-in. Journals.

Page 755, Sheet M. C. B.—B.

38. A member suggests that the passenger car pedestal for 5-in. by 9-in. journal boxes be dropped from the Recommended Practice for the reason that the flanges and other portions outside of the journal box are such that the fit would not be suitable for all the designs of truck wheel pieces.

The committee does not approve of this recommendation.

Journal Box and Pedestal for Passenger Cars with 5½-in. by 10-in. Journals.

39. A member suggests that the Association again take up and consider the question of the preparation of drawings for journal box for passenger cars with 5½-in. by 10-in. journals.

The committee recommends that this question be referred to the committee on freight car trucks, with instructions to prepare the necessary drawings of pedestal and journal box, showing only the essential dimensions.

Axle "E."

42. A member suggests that the axle shown on Sheet M. C. B. —B. should have the radius for fillet between the dust guard and wheel seat ¾ in. instead of ¼ in., so that it may be turned with the same tool as the journal and wheel seat fillets and to conform to standard axles shown on Sheet M. C. B. 15.

Cast-Iron Wheels.

Page 760, Sheet M. C. B.—N, O and P.

43. A member suggests that the recommended practice for cast-iron wheels for 60,000, 80,000 and 100,000 lbs. cars be advanced to Standard.

The committee believes that the specifications for cast-iron wheels should be advanced to Shandard, but before doing so should be referred to the wheel committee for any changes or corrections that may be necessary.

High-Speed Foundation Brake Gear for Passenger Service.

Sheets M. C. B.—J, K and L.

48. A member suggests that the brake-gear arrangement shown on Sheets M. C. B.—J, K and L be revised to show the hand-brakes independent of the air and conform to Interstate Commerce Commission requirements.

49. A member suggests that the high-speed foundation brake shown on these three sheets be dropped, as it does not conform to the Interstate Commerce Commission requirements, nor is it suitable where high-speed brakes are used, therefore this brake is not suitable for the heavy cars which are being built for passenger service, and the sheets contain no reference to such cars.

The committee recommends that these three sheets be referred to the committee on train brake and signal equipment for revision.

Steam and Air Line Connections.

Pages 775 and 776, Sheet M. C. B.—Q.

50. A member calls attention to air-brake hose, Sheet M. C. B. —Q, being shown as 1 in. by 22 in. while specifications for standard hose, Proceedings 1910, page 708, paragraph 6, show that the inside diameter must not be less than 1⅜ in.

51. A member suggested that the last paragraph on page 776 be changed to read as follows: "That the air-brake hose must be 1⅜ in. inside diameter and 22 in. long, and air-signal hose must be 1⅛ in. inside diameter and 22 in. long. The recommendation to change air-brake hose from 1 in. to 1⅜ in. is made to conform to Rule 21 of the Appendix Code of Rules Governing the Interchange of Passenger Equipment Cars. The recommendation to change signal hose from 1 in. to 1⅛ in. is for the reason that, when signal hose is made on a 1⅛-in. mandrel, the inside diameter is at least 1⅛ in. and hose should, therefore, be branded 1⅛ in."

The committee concurs in the recommendation that air-brake hose must be 1⅜ in. inside diameter, but does not approve the 1⅛-in. diameter for air-signal hose. The committee also recommends that the heading on page 775 be changed to read: "Steam and Air Connections for Passenger Cars."

52. A member calls attention to the angle at which angle cock under car ends it set on Sheet M. C. B. 18, being 30 deg. from the vertical, while on Sheet Q it is shown vertical, and recommends that 15 deg. from the vertical be made standard for freight and passenger cars.

The committee recommends that the angle cock shown on Sheet Q be changed to show 30 deg. from the vertical.

Uncoupling Arrangements for M. C. B. Couplers.

Sheet M. C. B.—C.

53. A member suggests that the uncoupling attachments should be changed to conform to Interstate Commerce Commission requirements.

54. A member suggests that Sheet C be revised to meet requirements of the Interstate Commerce Commission.

55. A member suggests that this be advanced to Standard in so far as all clevises and links are concerned, but not the upcoupling lever and attachments, on account of them not being applicable to all of the present equipment.

The committee recommends to advance to Standard the clevises, links and pin now shown on Sheet C, and to include Plate B and text governing the uncoupling levers of the U. S. Safety Appliance Standards, adopted by order of the Commission dated March 13, 1911, in the Standards of the Association.

Coupler Yokes.

Pages 776 and 777, Sheet M. C. B.—C.

56. A member suggests that the yoke for the twin spring gear, yoke for tandem spring gear and yoke for friction gear be advanced to Standard.

The committee concurs in this recommendation and suggests that they be shown on a new Sheet No. 23-A.

Drop-Test Machine.

Page 777, Sheet M. C. B.—I.

57. A member suggests that the drop-test machine for M. C. B. couplers and knuckle pins be advanced to Standard.

The committee concurs in this recommendation.

Box-Car Outside—Hung Side-Door Fixtures.

Page 779, Sheet M. C. B.—F.

62. A member suggests that door-hasp staple, shown on Sheet M. C. B.—F, be increased in length from 5⅜ in. to 16 in., to provide for four bolts for fastening staple to door. The present hasp staple is causing trouble, due to pulling through the wood on account of insecure fastening.

The committee approves this suggestion.

Standard Location for Car-Door Seals.

65. At a special session of the General Managers' Association of the Southeast, held on September 9, 1910, the following resolution was unanimously passed:

"Resolved, That it be the sense of this meeting that car-door fastenings should be located 5 ft. above top of rail and 1 ft. above the floors of the cars, and it is recommended to all lines that they include these specifications for all new equipment, and that it be made a rule to alter the location of door fastenings for all cars going through the shops for general overhauling to conform to this standard."

It was further stated that this action will be communicated to the Master Car Builders' Association, the various General Managers' Associations and to the American Railway Association, the cause for this action being the present difficulty in procuring proper seal records, by reason of the seals on most cars being so high from the ground that those entrusted with the duty of procuring the sealing records can not read them.

This subject was considered at the meeting of the Executive Committee of the Master Car Builders' Association, on September 21, 1910, and referred to this committee. Subsequently the American Railway Association issued Circular 1069 to all railway members of that association, reading as follows:

"1. Are you in favor of adopting a standard height for car-door fastenings?

"2. Do you favor 5 ft. or 6 ft., or what other height above the rail as the height for car-door fastenings?

"3. If a standard height is adopted, shall it apply to equipment going through shops for general repairs as well as to new equipment?

"4. In your opinion, would an additional fastening be required on the door in the event of the present fastening being lowered to a point near the bottom edge of the door as proposed?"

The committee has given this matter very careful consideration, and would call the attention of the members to Sheet M. C. B.—F, Box Car Outside Hung Side Door, on which the hasp to which the seal is attached is located about "5 ft. 6 in. from the top rail," and to sheet M. C. B.:—F-1, Box Car Flush Side Door, on which the hasp to which the seal is attached is located "5 ft. 6 in. from top of rail." Flush doors of the description shown on Sheet F-1 are sealed both at door-rod handle and at the hasp, therefore, the sealing dimensions should be shown at the door-rod handle as well as at the hasp. On some refrigerator cars, on account of the double-door bar-lock construction, it is difficult to bring the sealing eye lower than 5 ft. 8 in. above the top of rail, and on box cars equipped with vertical door rods sufficient clearance must be allowed between the top of station platform and the handle of the door rod for proper manipulation of the door-rod handle.

It is unquestionable that the seal should be located on the doors within reasonable reading distance from the ground in order to facilitate application and inspection of the seals, and the committee would recommend the following: Center of hasp or sealing eye should be located not less than 5 ft. above top of rail nor more than 5 ft. 9 in. above top of rail. These dimensions to be shown on Sheets F and F-1 and proper reference made in text.

Stenciling Cars.

Page 780, Sheet M. C. B.—M.

71. A member suggests that the lettering for freight cars be advanced to Standard, as it refers only to the form and size of letters and figures.

Your committee concurs in this recommendation.

Limit Gages for Round Iron.

Pages 781 and 782.

72. The executive committee referred to the committee on revision of standards and recommended practice, the following: To investigate and report on whether any changes are necessary in the present recommended practice covering the diameters of round iron.

At the present time the recommended practice does not show any limits for sizes of round iron more than 1⅝ in. in diameter; furthermore, a manufacturer has asked that the limits be increased for bars 1⅜ in. and over in diameter, claiming that the present limits are rather close for rolling-mill practice, and can only be met under special conditions and with special care, which means a special price.

The committee, after carefully considering this question, believes it will be entirely proper to adopt the standards of the Master Mechanics' Association for the allowable variations, both below and above the nominal size for round iron 1½ in. and more in diameter. Revised table is given below.

Nominal Diameter of Iron, Inches.	Inches. Large Size End.	Inches. Small Size End.	Inches. Total Variation.
1½	1.5115	1.4885	.023
1⅝	1.6370	1.6130	.024
1¾	1,7625	1,7375	.025
1⅞	1,8880	1,8620	.026

Round iron 2 in. in diameter and over should be rolled to nominal diameter.

Proceedings.

78. The committee would suggest that in making up the proceedings for the succeeding years we eliminate the result of meetings of the arbitration committee, which are published separately and the Code of Interchange Rules, also published separately, and make reference in the Proceedings similar to the reference now made for the Rules for Loading Materials, which latter have, in the past, been eliminated from the proceedings.

The committee would further recommend that the text and sheets relating to standards and recommended practice of the association be published separately from, and not included in, the proceedings.

New Subjects.

81. A member recommends the following: (a) As there is shown among the recommended practice of the Association an axle suitable for carrying 50,000 lbs., or one having 6-in. by 11-in. journals, believe that a committee should make recommendations giving information in regard to all other truck details for a truck suitable for this type of axle.

(b) As the steel truck sides for freight cars are becoming quite numerous and of various designs, suggest that specifications be prepared indicating the kind of tests such structures should stand to make them suitable for cars of 80,000, 100,000 and 150,000 lbs. capacity.

(c) Similar specifications should be prepared for truck bolsters to make them suitable for cars of 80,000, 100,000 and 150,000 lbs. capacity.

The committee concurs in the above recommendations, and suggests that the committee on freight car trucks be instructed to prepare and submit truck details to go with the 6-in. by 11-in. 50,000-lb. axle, and report upon questions B and C.

82. A member recommends that the matter of proper specifications for cast-steel, rolled-steel and forged steel wheels should be referred to the wheel committee, or some special committee, with instructions to prepare the necessary specifications and physical tests.

The committee recommends that this subject be referred to the wheel committee for consideration.

The report is signed by:—R. L. Kleine, (Penn.), chairman; W. E. Dunham, (C. & N. W.); T. H. Goodnow, (L. S. & M. S.); W. H. V. Rosing, (Mo. Pac.); C. E. Fuller, (U. P.); O. C. Cromwell, (B. & O.), and T. M. Ramsdell, (C. & O.).

R. L. Kleine (chairman of committee): Inasmuch as questions 11, 12, 24, 25, 48, 49, 53, 54, 55 and 60 refer to safety appliance standards or have some connection therewith, the committee would suggest that argument upon them be deferred until we hear from the safety appliance committee.

The President: Mr. Seley's motion is that the code of interchange rules and the rules for loading long materials be incorporated, and that the text and sheets of the standards of recommended practice be retained in the report of the proceedings, while the arbitration committee's decisions be eliminated.

The motion was carried.

The Secretary: In regard to paragraph 80, if agreeable to the convention the secretary will see that the committee on the revision of standards and recommended practice will get the result of the letter ballot, so that whatever changes they think necessary in the standards can be made.

Train Brake and Signal Equipment.

A number of subjects relative to train-brake and signal equipment were assigned to the committee for investigation and report. These subjects will be taken up and reported on in the order presented.

Efficient Truck Brake for Cars with All-Steel or Steel-Tired Wheels.

"To investigate the question of brake efficiency on cars equipped with all-steel or steel-tired wheels."

The committee on standards, in its report to the convention last year, paragraph 31, page 70, reported as follows:

"A member suggests the following: While text or sheet does not specify that steel or steel-tired wheels, for freight cars, must be 33 in. in diameter when new, it is assumed that the diameter new is to be in accordance with the recommended practice for cast-iron wheels. That this question be referred to the committee on car wheels, with instructions to look into the question of proper diameter for such wheels, in so far as maintaining the proper height of couplers for steel freight cars, also in maintaining effective brakes when wheels are worn to the limit, as trouble is experienced in holding brake hangers within the limits, also as the brake details are now such that an effective brake cannot be maintained. This question is referred jointly to the committee or train brake and signal equipment and to the committee on car wheels."

A communication was received by the chairman of this committee from the chairman of the standing committee on car wheels, which indicated that the wheel committee would recommend 33-in. maximum diameter of wheels for all-steel and steel-tired wheels, but would make no recommendations concerning the minimum diameter, or when worn to limit. From a compilation of the data received in answer to circular inquiry of the wheel committee the committee has assumed, for the purpose of consideration of this subject, a diameter of 30 in. when wheel is worn to limit. By making several truck-brake layout drawings it was found that the additional brake travel due to decreased diameter of wheels can be readily taken up by means of additional holes in the bottom of connection rod jaws.

The committee recommends that sketch of bottom rod, detail Fig. 1, be shown on Plate 18 to cover bottom-rod details for cars having inside-hung brakes and equipped with all-steel or steel-tired wheels; the inside pin holes to be used with new wheels.

Angularity of Brake-Beam Hangers.

"To investigate the question of angularity of brake-beam hangers."

The committee on standards reported last year, see paragraph 32, page 70, of 1910 Proceedings, as follows:

"A member suggests to advance to standard the following recommended practice, under the head of 'Brake Beams': 'The brake hangers shall have an angle as nearly as possible to ninety degrees from a line drawn from the center of the brake shoe to the center of the axle when shoes are half-worn. This matter is referred to the committee on train brake and signal equipment, with the request that they investigate the question of angularity of brake hangers before any action is taken to advance to standard.' "

This subject is somewhat involved by the increasing use of all-steel and steel-tired wheels on freight cars, with the conse-

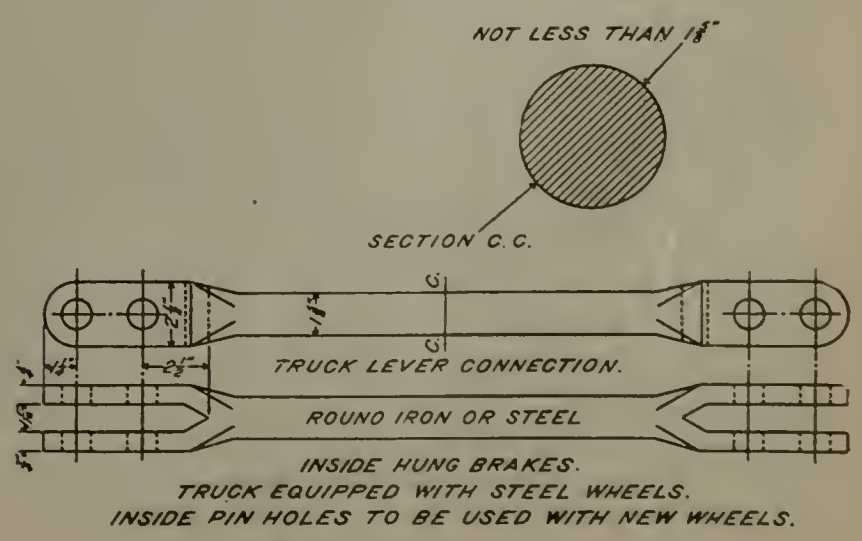

Fig. 1.—Bottom Rod for Truck Brakes.

quent difference in diameter of wheels when new and worn to limit. The wheel committee has made recommendations as to maximum diameter for all-steel and steel-tired wheels, but has left open the question of diameter when wheel is worn to limit. It is obvious that an angle of brake beam hanging suitable for a new 33-in. wheel would be objectionable when wheel is worn to limit, and some compromise angle would have to be selected. The committee recommends, therefore, that the question of advancing to standard the before-mentioned recommended practice be deferred until the committee has more data and time for consideration of the subject.

Triple Valve Test Rack and Cleaning Air Brakes.

"To consider whether the recommended practice covering cleaning of air brakes and diagrams of triple valve test rack should be advanced to standard."

This subpect was referred by the committee to J. L. Burton and B. P. Flory, as a sub-committee, whose report is as follows:

"A member of the association suggests advancing to standard the association's recommended practice on Cleaning Air Brakes. The recommended practice, as adopted in 1902, having become in part obsolete through the almost general adoption of a more modern brake equipment than was in use when the present recommended practice was adopted, the committee does not concur in the suggestion, and submits herewith a proposed revised code of instruction on the maintenance of freight brakes, which, if adopted, will be applicable to all types of brake equipment now in general use on freight equipment cars.

"The topical discussion at the 1909 convention on Cleaning of Triple valves and Brake Cylinders on Freight Cars to meet the requirements of the Interstate Commerce Commission (see pages 348-367 of the 1909 Proceedings), with which the members have had an opportunity to become familiar, has been used by the committee as a basis on which to construct its report. The committee acknowledges its indebtedness to Mr. A. L. Humphrey, vice-president and general manager of the Westinghouse Air Brake Company, and to Mr. F. M. Whyte, general manager of the New York Air Brake Company, for the interest taken in this work.

"In the discussion at the 1909 convention, referred to above, reference was made to the experiments which had been conducted on the Pennsylvania with the operation of triple valves in passenger service without lubricant, and it was suggested that members of the association make similar experiments with triple valves in freight service. In pursuance to the suggestion outlined at the 1909 convention, a member of the association's committee on train brake and signal equipment had placed in freight and coal service on the Philadelphia & Reading and the Central of New Jersey, during the latter part of 1909 and the early part of 1910, 1,500 Westinghouse K-2 triple valves containing no lubricant; also, for comparative test, 1,000 additional triple valves which had been lubricated with a suitable composition of oil and graphite. A large number of the lubricated and non-lubricated valves were removed from the cars after they had been in service for twelve to fourteen months, and were carefully inspected and tested before and after clearing. Briefly stated, the investigation thus far shows the following results:

Lubricated Valves.

"After being in service twelve to fourteen months, 65.66 per cent of the valves tested passed all test before they were cleaned; 21 per cent failed on charging the auxiliary reservoir in the prescribed time because of the valves being dirty. After cleaning, 86.36 of the lubricated valves tested passed all test.

Non-Lubricated Valves.

"After being in service twelve to fourteen months, 37.2 per cent of the valves passed all test before cleaning; 36 per cent failed on charging the auxiliary reservoir in the specified time. After cleaning, 90.69 per cent of the non-lubricated valves tested passed all test. All of the slide valves, slide-vave seats, bushing and packing rings were highy polished and showed no ill effects from lack of lubricant. Eliminating the defects that caused the lubricated and non-lubricated valves to pass the prescribed test, which would not be influenced by the application of lubricant, there was no appreciable difference in the performance of the lubricated and non-lubricated valves.

"While the committee does not feel that the scope of its investigation has been sufficiently broad to justify any definite recommendations on discontinuing the application of lubricant to triple valves, it does feel that the subject is of sufficient importance to justify a more thorough investigation than the committee has been able to make. As a conclusion to its report, the committee presents the following proposed instructions on the inspection, repairs and test of freight brakes, and suggests its adoption as recommended practice."

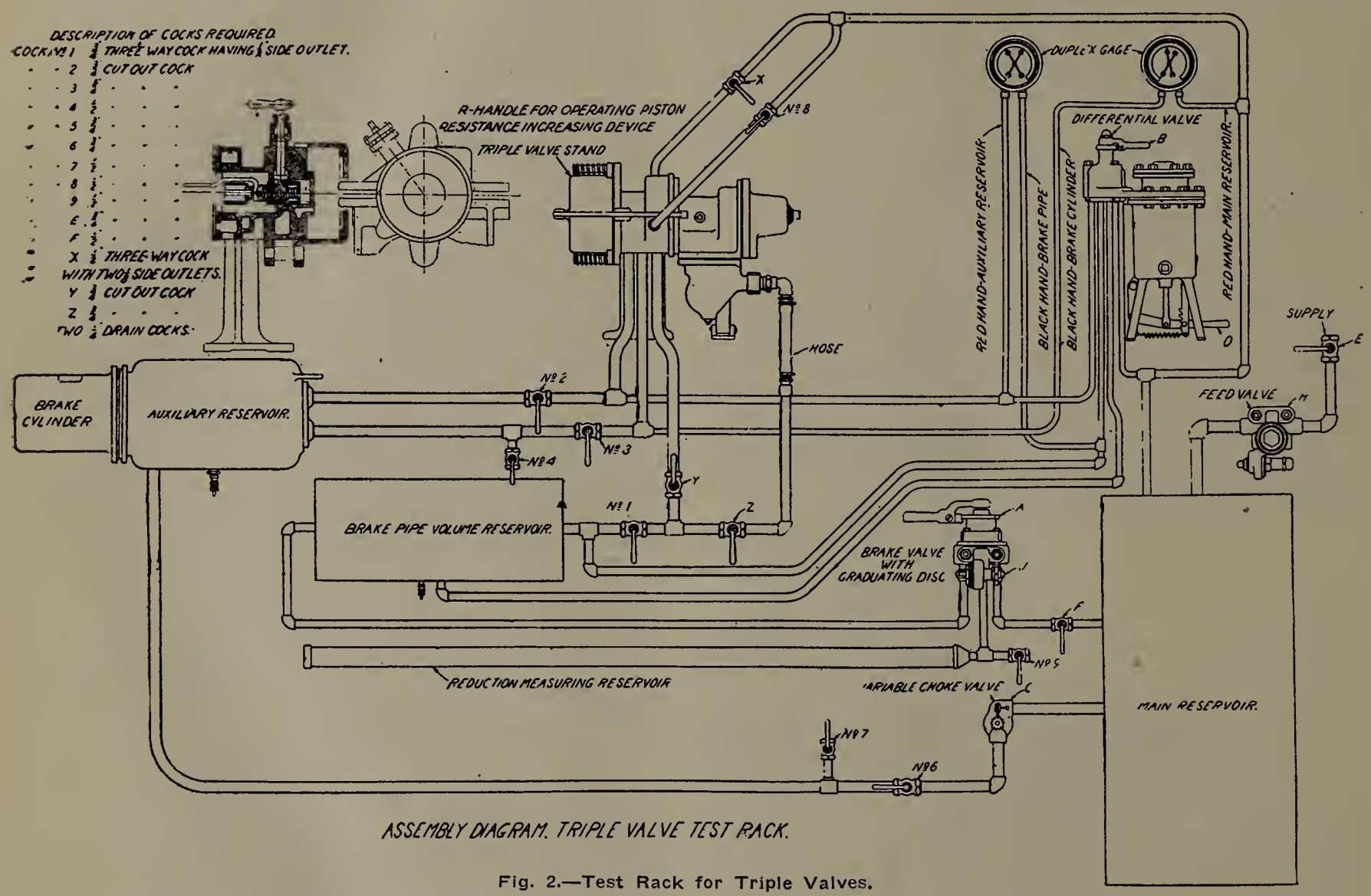

Fig. 2.—Test Rack for Triple Valves.

Annual Repairs to Freight-Car Air Brakes.

Inspection: Cleaning and Lubricating Triple Valves.

The triple valves should be removed from the car for cleaning in the shop, and should be replaced by a triple in good condition. It should be dismantled and all the internal parts, except those with rubber seats and gaskets, cleaned with gasoline, then blown off with compressed air and wiped dry with a cloth.

The slide valve and graduating valve must be removed from the triple piston and retarded release parts from the body in order that the service ports in the slide valve and other parts may be properly cleaned.

No hard metals should be used to remove gum or dirt or to loosen the piston packing ring in its groove.

The feed groove should be cleaned with a peice of wood, pointed similar to a lead pencil. Bags or cloth should be used for cleaning purposes rather than waste, as waste invariably leaves lint on the parts on which it is used.

In removing the emergency valve seat, care must be exercised not to bruise or distort it.

Particular attention should be given the triple-piston packing ring. It should have a neat fit in its groove in the piston, and also in the triple-piston bushing; once removed from the piston,

or distorted in any manner, it should be scrapped. The fit of the packing ring in its groove and bushing and the condition of the bushing should be such as to passs the prescribed tests.

The graduating stem should work freely in the guide nut. The graduating spring and the retarded release spring in retarded release triple valves must conform to standard dimensions and be free from corrosion. The thread portion of the graduating stem guide should be coated wtih oil and graphite before reapplying it to the triple cap.

The triple valve piston and the emergency valve must be tested on centers provided for the purpose to insure same being straight. The emergency-valve rubber seat should invariably be renewed unless it can plainly be seen to be in first-class condition, which is seldom the case. A check-valve case having cast-iron seat should be replaced with a case having a brass seat.

The cylinder-cap gasket and check-valve case gasket to be carefully examined and cleaned with a cloth; but should not be scraped. All hard or cracked gaskets to be replaced with new ones.

Standard gaskets as furnished by the air-brake manufacturers should be used. The use of home-made gaskets should be avoided, as the irregular thickness results in leakage and causes triple-piston stem to bend or break.

The tension of the slide-valve spring should be regulated so that the contour of same be such as will bring the outer end ⅛ in. higher than the bore of the bushing when the outside end of the spring touches bushing when entering.

Before assembling the parts, after cleaning, the castings and ports in the body of the triple valve should be thoroughly blown out with compressed air, and all parts of the triple not elsewhere provided for known to be in good conditon.

Lubricate the seat and face of the slide valve and slide valve graduating valve with high-grade very fine dry graphite, rubbing it onto the surface and the upper portion of the bushing where the slide-valve spring bears, so as to make as much as possible adhere to and fill up the pores of the brass, leaving a very thin coating of free graphite. The parts to be lubricated with graphite must be free from oil or grease.

Rub the graphite in with a flat pointed stick over the end of which a piece of chamois skin has been glued. At completion of the rubbing operation a few light blows on the slide valve will leave the desired light coating of loose graphite.

The triple-valve piston packing ring and its cylinder should be lubricated with either a light anti-friction oil or a suitable graphite grease as follows:

Apply a light coating to the packing ring and insert the piston and its valves in the body, leaving them in release position, then lubricate the piston cylinder and move the piston back and forth several times, after which remove the surplus from the outer edge of the cylinder to avoid leaving sufficient lubricant to run on the slide valve or seat while the valve is being handled or stored ready for use.

No lubrication to be applied to the emergency piston, emergency valve or check valve.

All triple valves after being cleaned or repaired must be tested, preferably on a rack conforming to the attached print, and pass the test prescribed under the subject of "Triple Valve Tests" before being placed in service.

Should any of the triple-valve bushing require renewing, such work should be done by air-brake manufacturers.

Triples in which packing rings are to be renewed, slide valve or graduating valves renewed or faced, if the latter is of slide type, should be sent to a central point or general repair station for repairs.

When applying the triple valve to the auxiliary reservoir, the gasket should be placed on the triple valve, not the reservoir.

Cleaning: Lubricating and Inspection of the Brake Cylinders.

First, secure the piston rod firmly to the cylinder head, then, after removing the non-pressure head, piston rod, piston head and release spring, scrape off all deposits of gum and dirt with a putty knife or its equivalent, and thoroughly clean the removed parts and the interior of the cylinder with waste saturated with kerosene.

Packing leather must not be soaked in kerosene oil as same destroys the oil filler placed in the leather by the manufacturers, opening the pores of the leather and causing the same to become hard.

Particular attention to be paid to cleaning the leakage groove and the auxiliary tube. Triple valve must be removed when the auxiliary tube is being cleaned.

The expanding ring when applied in the packing leather should be a true circle and fit the entire circumference, and have an opening of from 3/16 in. to ¼ in.; when removed from the cylinder the ring opening should be 1½ in. to 1 9/16 in., and with this opening, of course, will not be a true circle.

A packing leather which is worn more on one side than the other should be replaced with a new one of uniform thickness, or turned so as to bring the thin side away from the bottom of the cylinder. The piston should be turned each time the cylinder is cleaned. In putting a packing leather on piston, it should be so placed as to bring the flesh side of the leather next to the cylinder walls.

Follower studs to be firmly screwed into the piston heads, and nuts on same to be drawn up tight before replacing the piston.

The inside of the cylinder and packing leather to be lightly coated with a suitable lubricant, using not more than 4 ounces nor less than 3 ounces per cylinder.

Part of the lubricant should be placed on the expander ring, and the adjacent side of the packing leather, thus permitting the air pressure to force the lubricant into the leather at each application of the brake.

No sharp tools should be used in placing the packing leather into the cylinder.

After the piston is entered and before the cylinder head is replaced the piston rod should be slightly rotated in all directions. about three inches from the center line of the cylinder, in order to be certain that the expanding ring is not out of place.

In forcing the piston to its proper position in the cylinder, the packing leather will skim from the inner walls of the cylinder any surplus lubricant that may have been applied. It has been found good practice to again extract the piston and remove the surplus lubricant.

All stencil marks to be scraped off or painted over with black paint. The place of cleaning, day, month and year to be stenciled with white paint, preferably on both sides of the cylinder or auxiliary reservoir or if same is not readily visible, in a convenient location near the handle of the release rod.

The bolts and nuts holding the cylinder and reservoir to their respective plates and the latter to the car, to be securely tightened.

The brake cylinder to be tested for leakage after cleaning, preferably with an air gauge, which can be done by attaching the gauge to the exhaust port o fthe triple valve before connecting the retainer pipe, or where the latest type retainers are used the gauge can be connected to the exhaust port of the retaining valve. In either case, the gauge will indicate cylinder leakage on releasing the triple valve after making an application, and when attached to the retainer valve it will also test the retainer and retaining-valve pipe.

Brake-cylinder leakage should not exceed 5 lbs. per minute, from an initial pressure of 50 lbs.

Each time the triple valve and the brake cylinder are cleaned, the brake pipe, brake-pipe strainer and branch pipe should be thoroughly blown out and the triple valve strainer cleaned before recoupling the branch pipe to the triple valve. If a dirt collector is used, the pug should be removed, the accumulation blown out and the threaded portion of the plug coated with oil and graphite before replacing.

All union gaskets should be made of oil-tanned leather. The use of rubber in unions should not be permitted.

Piston travel should be adjusted to not less than 5½ in., nor more than 7 in.

Additional Inspection and Repairs to Cars.

When the brake cylinder and triple valve is cleaned, the following addditional work should be done to the car:

Retaining valve cleaned by removing the cap, wiping or blowing out all dirt and seeing that the valve and its seat are in good condition, the retaining position exhaust port open and the valve proper is well secured to the car in a vertical position, pipe clamps applied where missing and tightened where loose, hose and and angle cocks turned to their proper position. Pipe joints, air hose, release valves, angle and stop cocks should be tested by painting the parts with soapsuds while under an air pressure of not less than 70 lbs., preferably 80 lbs., and defective parts repaired or removed.

See that there are no broken or missing brake shoes, brake beams or foundation brake gear, and if the car belongs to a foreign road, a repair card should be made out covering all work that has been done and attached to the car, as per M. C. B. rules.

The inspection and repairs which have been mentioned should be made to all cars at least once in twelve months.

Mounting Triple Valves for Testing.

With the triple-valve gasket applied to th face of the triple-valve flange, place the latter against the face of the stand in a vertical position and open cock *X* as shown on attached piping diagram, Fig. 2. Connect the brake pipe to the triple, then open cock *Z*.

Before attaching triple valves suitable for use with 8-in. brake cylinders insert in the auxiliary reservoir end of the valve the friction-increaser extension piece, suitable for the valve under test.

Two triple-valve stand face plates are required for each test rack to permit the testing of all types of freight triple valves.

If it is found necessary to repeat any test which has necessitated a reduction of auxiliary reservoir pressure, valve "B" may be moved to position No. 2, which provides a by-pass around the triple valve from the brake pipe to the auxiliary reservoir, thereby permitting a quick recharge.

Test No. 1.—Charging Test for Triple Valves.

Commencing the tests with cocks 2, 3, 7 and 9 open, all other numbered cocks closed, valve "B" in position No. 3 (lap), valve A in position No. 1, auxiliary reservoir empty and main reservoir pressure 80 lbs. pressure, proceed as follows:

Close cock No. 7 and open No. 1 and with 80 lbs. pressure in the brake pipe note the time required to charge the auxiliary reservoir to specified pressure, as given in the following table:

With brake-pipe pressure maintained at 80 lbs., the triple valves should charge the auxiliary reservoir as follows:

Charging Auxiliary Reservoir.

Westinghouse Triple Valve.	From 0 to 30 Lbs. Seconds.		From 0 to 70 Lbs. Seconds.	
	Min.	Max.	Min.	Max.
8-in. non-quick service.....	21	28	58	78
10-in. non-quick service.....	13	17	34	44
8-in. quick service.....	32	42	100	120
10-in. quick service.....	49	24	60	72

New York Triple Valve.	From 0 to 30 Lbs. Seconds.		From 0 to 70 Lbs. Seconds.	
	Min.	Max.	Min.	Max.
8-in. non-quick service.....	..	..	61	82
10-in. non-quick service.....	..	..	46	61
8-in. quick service.....	..	..	100	120
10-in. quick service.....	..	..	65	80

These tests give practically the same results, and the time of charging from zero to 30 lbs. is given simply to save time in making the test.

Sec. "B," Test No. 2.—Leakage at Exhaust in Release Slide Valve of Emergency-Valve Leaking.

Open cock 1, and after the brake-cylinder pressure is exhausted close cock 3 and again coat the exhaust port with soapsuds to determine if there is any leakage from the auxiliary reservoir to the brake cylinder past the slide valve when the triple valve is in release position, or from the brake pipe to the brake cylinder past the emergency valve or its seat, when the differential on the emergency valve is high. Open cock 3, then paint the body of the triple valve with soapsuds to determine if leakage exists direct to the atmosphere through castings or gaskets.

If leakage is discovered at the triple exhaust in release position, determine if it is from the auxiliary reservoir or brake pipe in the following manner:

Move valve *A* to position No. 8 and open cock 7 until the brake pipe and auxiliary reservoir are empty; then with the valve *J* in position No. 3, place a soap bubble on the exhaust port and valve *A* in position No. 2. If no leakage is found at the exhaust, advance valve *J* by stages from position to position until a brake-pipe pressure of 10 lbs. is obtained. Any leakage from the exhaust while the auxiliary reservoir is without pressure must be from brake pipe, past the emergency valve. Therefore, if no exhaust leakage is found and leakage did exist while the auxiliary reservoir was charged, it indicates defective slide valve. At the completion of this test, close cock No. 7 and move valve *A* to position No. 1, recharging auxiliary reservoir.

Sec. C, Test No. 2.—Graduating-Valve Leakage.

Move valve *A* to position No. 7 until a brake-cylinder pressure of from 20 to 30 lbs. is obtained. Then return valve *A* to position No. 3 and close cock 3. If the brake-cylinder pressure then increases without leakage at the exhaust port, it is proper to assume that the graduating valve is leaking, providing it has been determined by the preceding tests that the emergency valve is tight. If leakage at the exhaust occurs during this test, which will be determined by placing a soap bubble on the exhaust, the leakage may be either from slide valve or graduating valve. The rate of rise of pressure on the brake-cylinder gage, resulting from graduating-valve leakage must not exceed 5 lbs. in 20 seconds. This comparatively rapid rate of rise is permissible owing to the extremely small volume of the section of brake-cylinder pipe into which the leakage is occuring.

At the completion of test, open cock 3 and move valve *A* to position No. 1.

Sec. A. Test No. 2.—Non-quick Service. New York Triple Valve. Leakage at Exhaust in Emergency. Check-Valve, Quick-action Valve and Cylinder-cap Gasket Leakage.

Operate the triple valve two or three times in quick action by closing and opening cock 1, finally leaving it closed.

Coat the exhaust port of triple valve with soapsuds to ascertain if leakage exists past the exhaust valve or bushing with the piston and valve in emergency position. Close cocks 2 and 3. If the brake-cylinder gage now indicates leakage greater than 5 lbs. in 10 seconds the leakage is excessive, and is usually due to imperfect seating of the check valve or quick-action valve, or to the main piston not making a tight joint on the main-cylinder gasket. To locate the defect place soap bubbles on the vent ports. No leakage at these points indicates that the leakage is past the main-cylinder gasket. If leakage is found at the vent ports, open cocks 1, 2 and 3 and recharge the auxiliary reservoir to 80 lbs., then move valve *A* to position No. 7 until the brake-pipe pressure is reduced to 10 lbs. and return valve *A* to position No. 3. Close cock 2, and if the quick-action valve is leaking the brake will immediately release. If it does not, the leakage is past the check valve.

At the completion of this test, if no leakage were found, open cocks 1, 2 and 3, and if release were discovered open cock 2 and move valve *A* to position No. 1.

Sec. B, Test No. 2.—Exhaust-valve Leakage in Release; also Vent-valve and Quick-action Valve Leakage.

Close cock 3 and coat the exhaust port with soapsuds to determine if there is any leakage from the auxiliary reservoir past the exhaust valve, or graduating valve or triples having this valve tandem with the exhaust valve when the triple is in release position. If exhaust leakage is found, the triple under test has tandem exhaust and graduating valves, determine which valve is leaking by making graduating-valve leakage test.

Sec. C, Test No. 2.—Graduating-valve Leakage.

Move valve *A* in position No. 7 until a brake-cylinder pressure of from 20 to 30 lbs. is obtained. Then return valve *A* to position No. 3 and close cock 3. If the brake-cylinder pressure then increase without leakage at the exhaust port, it is proper to assume that the graduating valve is leaking. The rate of rise of pressure on the brake-cylinder gage, resulting from graduating-valve leakage, must not exceed 5 lbs. in 20 seconds. This comparatively rapid rise is permissible owing to the extremely small volume of the section of brake-cylinder pipe into which the leakage is occurring.

If leakage at the exhaust occurs during this test, which will be determined by placing a soap bubble on the exhaust, the leakage is by the exhaust valve instead of the graduating valve.

At the completion of the test open cock 3 and move valve *A* to position No. 1.

Test No. 3.—Test of Type K Triple Valves for Retarded-release Feature; for Both Westinghouse and New York Triple Valves.

Commencing the test with cocks 1, 2, 3 and 9 open, all other numbered cocks closed, auxiliary reservoir changed to 80 lbs., valve *B* in position No. 3 (lap), lever *D* in position No. 2 and valve *A* in position No. 3 (lap), proceed as follows:

Move valve *A* to position No. 7 until brake-pipe pressure is reduced 20 lbs., then return it to position No. 3; place valve *J* in position No. 4; valve *B* in position No. 1 and valve *A* in position No. 2. This should move the triple-valve parts to normal (full release) position.

If the triple valve moves to retarded-release position, which is indicated by a contracted exhaust and slow release of brake-cylinder pressure, it indicates a weak or broken retarded release spring, or undue friction in the retarding device.

Following this test, recharge the system to 80 lbs. by moving valve *A* to position No. 1 and valve *B* to position No. 2.

When the brake pipe and auxiliary reservoir are charged to 80 lbs. move valve *A* to position No. 7 until brake-pipe pressure is reduced 20 lbs., then return it to position No. 3. Place valve *J* in notch No. 8, lever *D* in notch No. 4, valve *B* in position No. 1 and valve *A* in position No. 2.

Under these conditions the triple-valve piston and slide valve should be forced to retarded-release position. If this does not occur it indicates that the retarded-release spring is not standard, or the retarding devices have excessive friction. Completing test, place valve *B* in position 3 and valve *A* in position No. 1.

Sec. A, Test No. 4.—Application Test for Both Westinghouse and New York Triple Valves.

If for any reason it is desired to make this test following an application and release produced by closing and opening cock 1 or the auxiliary reservoir has just been charged by opening cock 1, this test should be preceded by an application and release with valve *A*, for the purpose of insuring the slide valve being in its normal position.

Commencing the test with cocks 1, 2, 3 and 9 open, all other numbered cocks closed, valve *A* in position No. 1, valve *B* in position No. 2 and lever *D* in notch 3, then with the auxiliary reservoir charged to 80 lbs., proceed as follows:

To test triple valves for 8-in. cylinders, place valve *B* in position No. 4 and valve *A* in position No. 5.

To test triple valves for 10-in. cylinder, place valve *B* in position No. 4 and valve *A* in position No. 6.

In all of these tests the triple valve should move to application position without causing a discharge of air from the vent port of valve *B*.

A failure to apply under the conditions specified indicates either excessive friction, which will be shown by an exhaust from the vent port or valve *B*; a leaky packing ring, which will be discovered later by the packing-ring leakage test; too large a feed groove in the cylinder, or a combination of two or more of these defects. Should the triple valve fail to apply and no exhaust occur from valve *B*, the indications are that the back flow of air from the auxiliary reservoir to the brake pipe is too rapid to permit the required differential.

At the completion of this test move valve *B* to position No. 3 and valve *A* to position No. 1.

Sec. B.—Quick-service Test (for Quick-service Triple Valves Only) for Both Westinghouse and New York Triple Valves.

Commencing the test with cocks 1, 2, 3 and 9 open, all other numbered cocks closed, valve *A* in position No. 1, valve *B* in position No. 3 and auxiliary reservoir charged to 80 lbs., proceed as follows:

Close cock 9 and move valve *A* to position No. 7 for all 8-in. and 10-in. triple valves. The brake-cylinder pressure obtained should not be less than 5 lbs. greater than that which will be obtained by subjecting to the same test triple valves which do not contain the quick-service features.

With two New York couplings, having a New York packing ring in each, coupled together, the compression of each ring is nominally 1-32 in.; and when the couplings are pulled apart, the space between the faces of the couplings is only 1-64 in.

If Westinghouse packing rings are used in New York couplings, the compression of each ring will be 3-64 in., or 1-64 in. greater than when New York packing rings are used in New York couplings. A combination of New York packing rings and Westinghouse couplings will reduce the nominal compression of the latter to 1-128 in.

The permissible variation in the nominal compression of the rings, with the existing standards of the air-brake manufacturers, is therefore in the ratio of 6 to 1, or 600 per cent, which, in the judgment of the committee, justifies the association in considering the adoption as standard, or recommended practice, such dimensions relating to air-brake hose couplings and packing rings as will insure greater protection against leakage and lessen the damage to hose when "pulled apart" than is now possible.

The New York Air Brake Company recommends adding 1-16 in. radius at the back or larger diameter of ring groove, to insure more satisfactorily machining the groove to specified dimensions without burning off the corners of the tool with which the groove is cut. Adding this radius to the groove will not affect the fit of the proposed or existing packing rings. The committee therefore concurs in the suggestion.

A member of the train-brake and signal committee recommends revising the proposed standard as recommended in 1909 to provide for the reinforced guard arm which is now an important feature of both the Westinghouse and New York couplings. The guard arm in no way affects the change of couplings, and the committee believes it should be provided for in the proposed standard.

New Proposed Standard Coupling.

The revision consists of an outline of the reinforced guard arm, a 1-16-in. radius at the back of the groove for the packing ring, and of a second, 3-16-in. and 5-32-in. radius in the groove of the guard arm and at the outer lug.

Leakage at the packing ring and damage to hose when "pulled apart" will depend largely upon the permissible variation in nominal dimensions to meet manufacturers' requirements. The question

of maximum variation in nominal dimensions affecting the compression of the ring and the clearance between faces of coupling has therefore been thoroughly investigated by (as previously stated) "gaging and testing over 5,000 couplings" and a number of packing rings. Couplings which were found to slightly vary from the manufacturer's standard were tested under air pressure on a pulling machine, with which could be approximated the strains to which the hose is subjected in service through the slack action and curving of cars. Notwithstanding the fact that no tests were made with frozen hose(which is, perhaps, the severest service test for ring leakage that can be made), the investigation leads to the conclusion that the air-brake manufacturers can be depended upon to supply their hose couplings and rings with a degree of accuracy that will insure satisfactory service.

This conclusion does not apply, however, to packing rings secured in the open market. In gaging and testing a large number of sample packing rings which were supplied by various rubber companies, less than 10 per cent of them were found to be fit for service. A number of these sample rings were represented by the rubber manufacturers to be "M. C. B. Standard," "perfect samples," etc.

If the members of the association care to consider securing packing rings in the open market, then suitable minimum and maximum gages for them should first be adopted (consideration of which does not come within the scope of the committee's investigation on couplings and rings.)

It has been suggested that the association should adopt minimum and maximum dimensions for the couplings as a whole. This would affect further developments in the device, such as are now being made by the two leading air-brake companies in what may be termed a "hose-protector coupling," with which it is intended to minimize the tension in the hose when pulled apart. The committee has therefore confined its recommendations to nominal dimensions affecting the interchange of couplings and rings.

Summary.

Summarizing, it can be said that two couplings and packing rings conforming to the dimensions shown in Fig. 3 will couple together as satisfactorily and with equal assurance against leakage at the packing ring, and with as little damage to hose when pulled apart, as is now had with couplings and rings conforming to the standards of the Westinghouse Air Brake Company.

One of the proposed M. C. B. couplings and rings will interchange withe couplings and rings conforming to the standard of the New York Air Brake Company more satisfactorily and with greater assurance against leakage and damage to hose when pulled apart than is now possible with a Westinghouse and New York coupling coupled together.

A proposed M. C. B. coupling and packing ring and a Westinghouse coupling and packing ring will interchange as satisfactorily and with equal assurance against leakage and damage to hose when pulled apart as will two couplings conforming to the standard of the Westinghouse Air Brake Company.

Gages for Air-brake Hose Couplings.

The question of gages for used air-brake hose couplings has been investigated with the ciew of determining proper contour lines of the gages. A number of used couplings have been gaged (and subsequently tested) with gages of such proportions and dimensions as to provide for condemning couplings with guard arms and lugs distorted or worn from 1-128 in. to 1-32 in.

The committee recommends, for reasons contained in the subcommittee's report, that the question of gages for air-hose couplings be deferred for a future report by the committee in which report will also be taken up the question of signal-hose coupling.

The report is signed by:—R. B. Kendig (N. Y. C.), chairman; T. L. Burton (C. of N. J.), B. P. Flory (N. Y. O. & W.), E. W. Pratt (C. & N. W.), and R. K. Reading (Penn.).

Mr. Burton presented the report and in connection therewith said: Mr. Goodnow brought up the point in the discussion this morning about stenciling the date when the triple valves were cleaned. The committee provides under Cleaning of the report the following: "All stencil marks to be scraped off or painted over with black paint. The place of cleaning, day, month and year to be stenciled with white paint, preferably on both sides of the cylinder or auxiliary reservoir; or, if it is not readily visible, in a convenient location near the handle of the release rod." The stenciling of the place, day, month and year is provided for, but we do not specify the road, as suggested by Mr. Goodnow. We believe that the method which we recommend will enable the road to locate the time the work was done. The idea is to put the car owner in a position where he can locate improper repairs before the bills are received. In many cases the bills for repairs do not come in for several months after repairs have been made, and we believe the recommendation we make will cover the matter.

Discussion on Train Brake and Signal Equipment.

I. S. Downing (L. S. & M. S.): As I understand it, if the car can be placed between other air-brake cars, the card is to be tied near the triple valve If it cannot be placed between these cars, it must b tied onto the train line near the angle cock. As this card is important to the switchmen, it seems to me it ought to be on the side of the car, where they can see it, and they should not be compelled to look under the car to find the card.

F. W. Brazier (N. Y. C. & H. R.): I want to call attention to the inferior gaskets which some roads buy—they are not standard and do not fit properly, and we should frown on the purchasing agent who buys anything except what is absolutely correct. It is too paltry a thing, to get something by which you can save a few pennies, and then delay the trains. All gaskets which are not standard should be thrown in the scrap heap.

C. E. Fuller (U. P.): I would like to refer to the recommendation of the committee the matter of applying this defect card: "If car can be placed between air-brake cars, wire this card near triple valve where it can be readily seen. If car must not be placed between air-brake cars, wire card to brake pipe near angle cock at each of car.

I do not believe the wiring of a card on a car is good practice. It is apt to be blown away. This is especially true out in the western country. The card should be fastened on the car so as to stay there. I do not think you hold the card by tying it.

O. C. Cromwell (B. & O.), referring to Fig. 1: I think the dimension in the inner holes at the bottom of the jaw, 2½ in., is too short. I believe it should be 2¾ in.—the beginning of the angle in the corner. I think that should be corrected.

Mr. Burton: A question was raised on the substitution of one card for two, and I will state in that connection that that one little point resulted in more labor on the part of the committee than all the rest of the report put together, and it was the experience of a number, who made it a point to investigate the question, to find that where wo cards were provided the train crews applied whichever card they happened to have in their pocket regardless of the nature of the defect. As to attaching the card by wiring rather than nailing, I think the ability to keep the wired card on the car to the repair station depends on how soon you get it to the repair station. The committee did not feel that it was justified in asking train crews to carry tacks and a hammer in their pockets, when they could apply the tag with a wire. The question of the brake rod, 2½ in. from the center of the inner hole to the bottom of the jaw—it was intended to have it conform to the present recommendation—which the committee believes it does.

T. H. Goodnow (L. S. & M. S.): I would like to ask Mr. Burton if they are satisfied with a two-hole connection in the adjuster—whether they have made investigations and have been able to overcome the necessity of the three-hole connection.

Mr. Burton: I am sure that the two-hole connection will be satisfactory, if you have a proper adjustment. It will also depend largely on the spacing of the holes. The spacing of the two holes is not shown here from the fact that any given spacing would not be suitable for all proportion of truck levers. That proportion must be worked out. The points on which the committee suggested that action should be taken and adopted for recommended practice as the defect card, the bottom rod, the annual repairs to freight car brakes and the adoption of the hose coupling and packing ring. I would move that the foregoing be received and submitted to letter ballot for adoption as recommended practice.

Mr. Goodnow: Not having had an opportunity to read over the report of the arbitration committee, I would like to know if the features included in this report which we are considering have been taken care of in the report of the arbitration committee, or whether we must wait for a year before it will go into the rules of interchange. I refer to the provision regarding the marking of the place, day, month and year when the triple valve was cleaned.

Mr. Hennessey: No, I will say that has not been taken care of by the arbitration committee in the report which it will present at this meeting.

Adam LaMar (P. L. W. of P.): I believe that is taken care of in rule 9 of the interchange rules, which reads as follows: "Knuckles removed and applied, whether open or closed.

Mr. Downing: I think it is an important point that the distance the pin holes in Fig. 1 be specified, if you have to add four holes to the bottom connection. We have more repairs with bottom connections on the cars today than any other thing we get, and if the association can get something we can put on, even if it is a hole or two too many, it will help us out. We have cars coming in with 10-in piston valves, and we find that some road has put on the wrong connection, and that applies to the inside hung brakes as well as the outside.

Mr. Burton: In reply to Mr. Downing, regarding the four holes. I would say that I can see no objection to adding more than two holes if they are necessary to take care of the variation in the proportioning of truck levers, which the committee had in mind, but I do not believe it will take care of the wrong radius of cars on foreign lines, because the spacing of the inside hole will govern largely there, and the proportioning of truck levers also comes into play.

Mr. Downing: We had an interesting experience—we had four different lengths of levers—I cannot recall the lengths—but we cut them down to one or two levers by adding additional holes on the inside hung brakes.

Mr. Burton: I think the committee would be very glad to revise that cut, if it has the approval of the association, to show two holes at one end and three at the other, or three at each end, if desired, but still omit the dimensions. I think the dimensions would have to be omitted.

Mr. Garstang: I think the adding of a few more holes at each end, in view of the introduction of steel and steel-tired wheels in freight-car service, would be a good thing, and I move that the drawing show three holes in each end, in place of what is shown in the cut, two holes.

The motion was carried.

W. F. Bentley (B. & O.): There is one point under Cleaning which I think could be corrected by changing the reading a little, and might overcome some of the troubles which have been complained of here today, where the triple valves had to be cleaned too often. The part I refer to says that the triple valves, after being cleaned or repaired, must be tested, preferably on a rack conforming to the attached print. I think the word "preferable" should be cut out, because there is where most of the trouble comes from now. They are being tested from the yard line pressure and from other different kinds of apparatus. They are unable to get the proper test; then the triple valve will show up defective in service, and other roads think that it needs cleaning again. Probably they in turn have no good way of testing them,

and they are again put back on the car, and again give the same trouble. I think the word "preferable" should be cut out, and make it positive that they shall be tested on an approved testing rack.

Mr. Burton: In reply to Mr. Bentley's point, I think the cutting out of the word "preferable" would not make it binding that they should be tested on a rack, because it is simply recommended practice. The committee thought the word "preferable" would draw sufficient attention to the fact that it should be tested on a rack of that kind, and that if this rack test be made binding it would practically block any further developments in the rack as they come up from time to time, as has been done in the testing of triple valves. As far as the effect is concerned I think it would be as forcible if it remains as printed.

Mr. Burton's previous motion was then carried.

Test of Brake Shoes.

In addition to its usual duty of investigating the properties of brake shoes, the committee has, for two years past, given consideration to the standards applying to brake beams. This report accordingly deals with two rather distinct subjects, and it is presented in two distinct parts, brake shoes and brake beams.

Brake Shoes.

Mr. Young, of the committee, was requested to act as a subcommittee to select and deliver to the laboratory samples of shoes used on heavy passenger cars in high-speed passenger service by the New York Central Lines, the Pennsylvania Lines and such lines as might have shoes to submit.

It was agreed that the frictional qualities and the wear of the shoes submitted should be determined by applications to the 33-in. steel wheel of the Master Car Builders' brake-shoe testing machine in effecting stops at a speed of 80 m. p. h. All tests were to be at this speed, and brake-shoe pressures of 12,000, 14,000, 16,000, 18,000 and 20,000 lbs. respectively were to be employed. Each kind of shoe submitted was to be tested in triplicate; that is, three shoes nominally alike were to be subjected to tests for the determination of frictional qualities and wear.

It was agreed that in determining the wear under the foregoing conditions it would be sufficient to weigh the shoes after three applications. It was understood that between applications the shoe would be cooled to its initial temperature. It was agreed that no further investigations of wheel wear need be undertaken.

Mr. Kendig, of the committee, was requested to submit a summary of the results of the brake-shoe tests made under his direction in the fall of 1909 on the Lake Shore & Michigan Southern. Professor Schmidt was requested to submit the results of tests then in progress at the University of Illinois, which were designed to ascertain whether there is any material difference in the coefficient of friction as developed by the use of the testing machine when the shoe is applied by weights, as in the Master Car Builders' testing machine, and when applied by means of an air-brake cylinder, as in service.

In any study of the possibilities of train braking, the facts concerning axle loads are of importance. From collected data it was found that an eight-wheel passenger coach of the Pennsylvania, weighing 119,000 lbs., gives the heaviest load per wheel, namely, a load of 14,875 lbs. Under the usual service applications the brake-shoe pressure would, of course, be less than this amount and could not, in the light of our present experiments, be regarded as excessive; but with modern equipment, in emergency applications, the brake-shoe pressure upon such a car may readily exceed 20,000 lbs.

The detailed report of tests which follows shows the precise results obtained as to coefficient of friction and wear from a considerable number of shoes when test under the several different pressures up to and including 20,000 lbs. It is formally reported to the committee also that tests made at the laboratory of the University of Illinois have involved, without serious difficulty, brake-shoe pressures as great as 24,000 lbs. If it be assumed that a shoe in such service will readily be called upon to withstand the condition of an emergency stop from a speed as high as 80 m. p. h., it may also be assumed that shoes such as those tested may be regarded as reliable for such service. It is of the highest importance, however, to know that the value of the coefficient of friction decrease as the pressure upon the shoe is increased. So great is this change in the coefficient of friction for some shoes that the length of stop is reduced but slightly by increasing the pressure from 18,000 to 20,000 lbs. On the other hand, the wear of all shoes increases rapidly with increase of pressure.

INITIAL SPEED 80 MILES PER HOUR. BRAKE SHOE PRESSURE 16000 POUNDS

NO. OF SHOE	DESIGNATION OF SHOE	STANDARD OF	COEFFICIENT OF FRICTION		LOSS per 100000000 FT. POUNDS OF WORK DONE- IN POUNDS	
			EACH SHOE	AVERAGE FOR EACH KIND	EACH SHOE	AVERAGE FOR EACH KIND
I	II	III	IV	V	VI	VII
333	CONGDON	B & O.	8.80	8.68	2.92	2.36
336	CONGDON	B. & O	8.56		1.80	
339	PLAIN CAST IRON	PENN.	9.34	9.19	5.06	4.58
340	PLAIN CAST IRON	PENN	9.04		4.10	
345	SPEAR MILLER	C.B & Q	8.15	8.42	5.06	5.03
346	SPEAR-MILLER	C.B. & Q.	8.70		5.01	
351	NATIONAL	C.M & ST.P.	8.60	8.67	5.02	4.00
352	NATIONAL	C.M & ST.P	8.75		2.99	
357	DIAMOND-S	SOU.PACIFIC	8.46	8.73	4.20	3.44
358	DIAMOND-S	SOU.PACIFIC	9.01		2.68	
367	U-SHOE	NYC. LINES	8.96	8.72	4.98	4.94
368	U-SHOE	NYC. LINES	8.47		4.98	
376	PITTSBURG		17.20	17.75	2.94	2.54 *
377	PITTSBURG		18.30		2.14	

ACTUAL LOSS IN WEIGHT HAS BEEN MULTIPLIED BY 2.20 WHICH IS THE RATIO OF CAST IRON TO THE ABRADED PARTS OF THIS SHOE.

Fig. 1.—Brake Shoe Pressure Tests, 16000 lbs.

INITIAL SPEED 80 MILES PER HOUR BRAKE SHOE PRESSURE 20000 POUNDS

NO. OF SHOE	DESIGNATION OF SHOE	STANDARD OF	COEFFICIENT OF FRICTION		LOSS per 100000000 FT POUNDS OF WORK DONE- IN POUNDS	
			EACH SHOE	AVERAGE FOR EACH KIND	EACH SHOE	AVERAGE FOR EACH KIND
I	II	III	IV	V	VI	VII
333	CONGDON	B.& O.	7.25	7.25	3.64	3.30
336	CONGDON	B.& O.	7.25		2.97	
339	PLAIN CAST IRON	PENN.	7.04	7.21	6.94	6.50
340	PLAIN CAST IRON	PENN.	7.39		6.06	
345	SPEAR-MILLER	C.B.& Q.		8.30		12.20
346	SPEAR-MILLER	C.B.& Q.	8.30		12.20	
351	NATIONAL	C.M.& ST.P.	6.87	6.87	10.93	10.93
352	NATIONAL	C.M.& ST.P.				
357	DIAMOND-S	SOU.PACIFIC	6.77	7.02	5.80	5.94
358	DIAMOND-S	SOU.PACIFIC	7.27		6.08	
367	U-SHOE	NYC. LINES	7.34	7.34	5.71	5.71
368	U-SHOE	NYC. LINES				
376	PITTSBURG		15.35	15.27	4.97	4.54 *
377	PITTSBURG		15.20		4.11	

ACTUAL LOSS IN WEIGHT HAS BEEN MULTPLIED BY 2.20 WHICH IS THE RATIO OF CAST IRON TO THE ABRADED PARTS OF THIS SHOE.

Fig. 2.—Brake Shoe Pressure Tests, 20000 lbs.

The tests herein reported were made at a speed of 80 m. p. h., and since the previous work of the committee does not involve such speeds, it has been impossible to tie up the results of the present series with those which have already been made of record by the committee. For this reason, it is impossible to judge from them in sufficiency of the present specifications for use in selecting shoes for very high-speed service. It has been suggested that in all probability a shoe which gives the best results under the present specifications will at least give good results under the higher speeds and pressures, such as are now being considered. Under the circumstances, it was thought best to present the results as obtained for the information of members, in the hope that later a series of tests may be made under heavy pressures at different speeds, which will permit such results to be connected with those underlying the present specifications.

By the courtesy of Professor Schmidt, the University of Illinois undertook to determine the effect upon the co-efficient of friction as found by experiment when the shoe was quickly applied, as by weight, and when more slowly applied, as by air. The purpose of this inquiry was to settle the question as to whether results obtained on the testing machine were the same as those which would be expected under service conditions on the road conditions of speed and pressure, of course, being the same. The following brief report from Mr. A. S. Williamson, giving the results of such tests, may be accepted as conclusive evidence that the results are substantially the same in both cases: "Responding to the request of the brake-shoe committee, tests have been made upon the shoe testing machine of the University of Illinois, in the course of which the shoe has been dropped upon the wheel through the action of weights, and also by use of an arrangement of air equipment giving substantially the conditions of service. These tests were made with a great variety of shoes and under many different conditions of speed and pressure. Wtihin the limits involved by these experiments, the mean coefficient of friction is practically independent of the manner in which the shoe is applied. The following results are typical:

Shoe Pressure.	Coefficient of Friction.
6,840 lbs.	14.15 (air)
6,840 lbs.	14.15 (air)
12,000 lbs.	12.25 (weights)
12,000 lbs.	12.50 (air)

"The similarity of the coefficient of friction in the two cases is shown."

Recommendations.

In concluding the summary of the work of the past year, the committee recommends:

1. That some further work be undertaken by the association for the purpose of connecting the results obtained under high brake-shoe pressures with those upon which the Association's specifications are based.

2. That in the specifications of the committee, as presented in the report of 1910 paragraphs c and f be changed to read

"steel or steel-tired wheel" instead of "steel-tired wheel."

The formal report of the tests made by Professor Louis E. Endsley under the direction of the committee during the current year is, in part, as follows:

"The tests were conducted upon the Master Car Builders' brake-shoe testing machine, a description of which will be found in the Proceedings of the Association for 1894 and 1906. The shoes tested were of seven different kinds. Six shoes of each kind were received at the university, and of this number two of each type, making fourteen shoes in all, were tested. None of the shoes had been in service prior to their receipt at the laboratory. All of the shoes were given a laboratory number. The numbers of the shoes tested are as follows: 333, 336, 339, 340, 345, 346, 351, 352, 357, 358, 367, 368, 376 and 377. A full description of each shoe tested follows:

Shoe No. 333 was designated by the committee as a Congdon shoe, and was received from the Baltimore & Ohio. The dimensions of the shoe when it was received at the laboratory were: Length on arc, 13¼ in.; width, 3⅜ in.; thickness, 1½ in. This shoe has five inserts, 1 in. wide by 2 in. long, running crosswise. Shoe No. 336 is similar to Shoe No. 333 and bears the same marking.

Shoe No. 339 was designated by the committee as a plain cast-iron shoe, and was received from the Pennsylvania. The dimensions of the shoe when it was received at the laboratory were: Length on arc, 14 in.; width, 3⅜ in.; thickness, 1½ in. This shoe has no insert. It is reinforced with a steel back. Shoe No. 340 is similar to Shoe No. 339 and bears the same marking.

Shoe No. 345 was designated by the committee as a Spear-Miller shoe, and was received from the Chicago, Burlington & Quincy. The dimensions of the shoe when it was received at the laboratory were: Length on arc, 13½ in.; width, 3⅜ in.; thickness, 1¾ in. The shoe has two V-shaped inserts. It is reinforced with a steel back. Shoe No. 346 is similar to Shoe No. 345 and bears the same marking.

Shoe No. 351 was designated by the committee as a National type, and was received from the Chicago, Milwaukee & St. Paul. The dimensions of the shoe when it was received at the laboratory were: Length on arc, 14 in.; width, 3⅜ in.; thickness, 1⅝ in. This shoe has chilled ends and is reinforced with a steel back. Shoe No. 352 is similar to Shoe No. 351.

Shoe No. 357 was designated by the committee as a Diamond S. Christie type. It is also known as the half-flange type, having a flange of 2½ in. at each end of the shoe. It was received from the Southern Pacific. The dimensions of the shoe when received at the laboratory were: Length on arc, 14 in.; width, 4 in.; thickness, 1½ in. The insert of this shoe is composed of a bundle of expanded metal, covering the entire face of the shoe. The shoe is reinforced with a steel back. Shoe No. 358 is similar to Shoe No. 357 and bears the same marking.

Shoe No. 367 was designated by the committee as a U shoe. It was received from the New York Central Lines. The dimensions of the shoe when it was received at the laboratory were: Length on arc, 15¾ in.; width, 3⅜ in., and thickness, 1⅝ in. The ends of the shoe are tapered and chilled. The shoe is reinforced with a steel back. Shoe No. 368 is similar to Shoe No. 367 and bears the same marking.

Shoe No. 376 was designated by the committee as a Pittsburgh shoe. It was received from the Pennsylvania. The dimensions of the shoe when it was received at the laboratory were: Length, on arc, 14 in; width, 3⅜ in.; thickness, 1⅜ in. This shoe is made up of a pressed back, ⅛ of an in. thick, completely filled with a composition filler. Shoe No. 377 is the same as Shoe No. 376.

So far as practicable, each shoe was tested upon a steel-tired wheel under the following brake-shoe pressures: 12,000, 14,000, 16,000, 18,000 and 20,000 lbs., the initial speed of the machine being in each case 80 m. p. h. At each of the above pressures nine stops were made.

In anticipation of a test, the shoe was given a number of applications until a full bearing surface was obtained, after which it was accurately weighed upon a pair of scales. The shoe were first tested at a pressure of 12,000 lbs., after which the pressure was increased by increments of 2,000 lbs., until a pressure of 20,000 lbs. was reached, or until the shoe broke or became unserviceable.

The loss in weight of the shoe was obtained by weighing the shoe after each three applications, thus giving a check upon the loss for each pressure. During the nine applications at each pressure, three cards were taken from which the coefficient of friction was obtained. It will be seen that some of the shoes failed before the pressure of 18,000 and 20,000 lbs. had been reached.

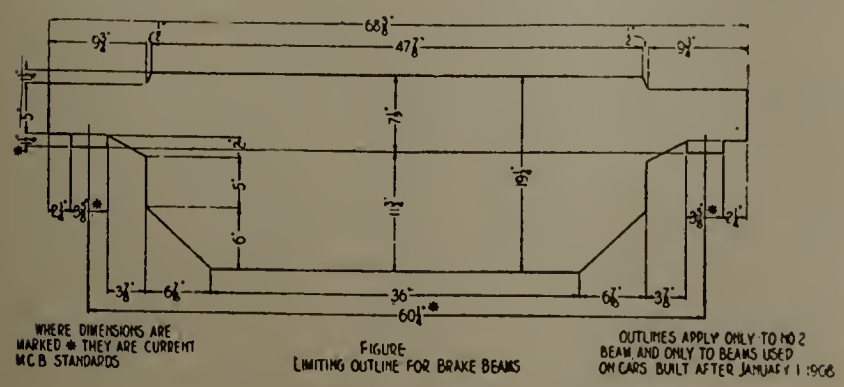

Fig. 4.—Limiting Outlines for Brake Beams.

INITIAL SPEED 80 MILES PER HOUR.

NO. OF SHOE	DESIGNATION OF SHOE	STANDARD OF	APPROXIMATE DISTANCE PER STOP IN FEET UNDER THE FOLLOWING BRAKE SHOE PRESSURES				
			12000	14000	16000	18000	20000
I	II	III	IV	V	VI	VII	VIII
333	CONGDON	B.&O.	2205	2070	1791	1600	1548
336							
339	PLAIN CAST IRON	PENN.	2472	1995	1755	1595	1656
340							
345	SPEAR-MILLER	C. B. & Q.	2495	2010	1910	1805	1424
346							
351	NATIONAL	C.M. & St.P	2403	2050	1835	1730	1698
352							
357	DIAMONDS	SOU. PACIFIC	2261	1925	1801	1551	1633
358							
367	U-SHOE	N.Y.C. LINES	2167	1964	1771	1660	1598
368							
376	PITTSBURG		1037	932	852	755	735
377							

Fig. 3.—Distance Necessary for Stop Under Different Pressures.

Between each application the shoe was cooled by a blast of air until the temperature was reduced to such an extent that the observer could bear his hand upon the shoe. This required from twenty-two to twenty-eight minutes between each application.

Fig. 1 gives the results obtained at a brake-shoe pressure of 16,000 lbs. Col. 1 of this table gives the number of the brake shoe; Col. II, the designation of the shoe; Col. III, the road on which it is standard; Col. IV, the coefficient of friction of shoe; Col. V, the average coefficient of friction of the two shoes of the same kind; Col. VI, the loss for each 100,000,000 ft.-lbs. of work done for each shoe; Col. VII, the average loss per 100,000,000 ft.-lbs. of work done for the two shoes of each kind.

Fig. 2 gives results obtained at 20,000 lbs. pressure.

Fig. 3 gives the approximate distance per stop in feet as obtained from the three cards taken at each pressure for the two shoes of each kind. Col. I of this table gives the number of the brake shoe; Col. II, the designation of the shoe; Col. III, the road on which it is standard; Col. IV, the approximate distance in feet during the stop at a pressure of 12,000 lbs.; Col. V, the approximate distance in feet during the stop at a pressure of 14,000 lbs.; Col. VI, the approximate distance in feet during the stop at a pressure of 16,000 lbs.; Col. VII, the approximate distance in feet during the stop at a pressure of 18,000 lbs.; Col. VIII, the approximate distance in feet during the stop at a pressure of 20,000 lbs.

Shoe No. 334 was selected as the second Congdon shoe for test. This shoe broke in two at the second stop at 12,000 lbs. pressure and no record was made. Shoe 335 of this same type also broke in two at the same pressure during the first stop.

All of the shoes, with the exception of the two mentioned above, stood nine stops at each of the pressures, 12,000, 14,000 and 16,000 lbs. All of these shoes, also, with the exceptions of Nos. 352 and 368, withstood nine stops at 18,000 lbs. pressure, but these two broke at the first stop at 18,000 lbs. pressure.

Shoe No. 345 broke at the ninth stop at 18,000 lbs. pressure. Shoe No. 336 broke after the third stop at 20,000 lbs. pressure, and the results from these shoes are based on the three stops. Shoe No. 333 and Shoe No. 351 stood only seven stops at 20,000 lbs., and the results from these shoes at this pressure are based on these stops. All of the other shoes tested and not mentioned above, namely, Nos. 339, 340, 346, 357, 358, 367, 376 and 377, stood nine stops at 20,000 lbs. pressure.

The coefficient of friction of all but two kinds of shoes tested decreased as the pressure increased, the two exceptions being the plain cast-iron shoe and the National shoe. This is no doubt due to the fact that the composition of the outside layer of the shoe is not of the same texture as the inner layer, or that the heating and cooling of the shoe changed the material in such a way as to affect the frictional qualities. Also, the loss due to wear is increased as the pressure is increased in all but three and the U-shoe. Two of these kinds of shoes are the ones kinds of shoes. These are the plain cast-iron, the National and the U shoe. Two of these kind of shoes are the ones which showed the inconsistency in the coefficient of friction.

In order to check these seeming inconsistencies, either in the wear or frictional qualities, three shoes, one of each kind mentioned above, were again tested at 12,000 lbs. pressure after the tests at 18,000 lbs. pressure had been conducted. In each case the seeming inconsistency practically disappeared, showing that tests of the outside layer of a shoe will not in all cases give similar results to tests of the inner material.

The coefficient of friction for all shoes, except one, are similar, there being less than two per cent variation in any two sets

of shoes. The one exception is the "Pittsburgh" shoe, which is a composition shoe, and gave practically twice the coefficient of friction obtained from any of the other shoes.

The wear is not uniform for the different makes of shoes, it varying from about 1.5 to over 5 lbs. per 100,000,000 ft.-lbs. of work done at 12,000 lbs. pressure and from about 3.5 to over 12 lbs. at 20,000 lbs. pressure. The loss is not much increased until a pressure of 18,000 or 20,000 lbs. is reached.

The distance per stop is about the same for all shoes but one, this shoe being the "Pittsburgh" shoe, which gave the highest coefficient of friction. Three of the shoes tested stopped the wheel in a less distance at 18,000 lbs. than at 20,000 lbs., and three of the other four shoe gave almost the same results at 18,000 as at 20,000 lbs. The only shoe that showed much advantage at 20,000 lbs. of that at 18,000 lbs. was the "Spear-Miller." This shoe became very hot and gave off a flame three or four feet long resembling a gas flame during the stop at 20,000 lbs. pressure.

Brake Beams.

The committee desires to recommend certain changes in the drawing of the standard brake head as shown on Sheet M. C. B. 17.

1. The dimensions of the upper-hanger hole have been made the same as the dimensions of the lower-hanger hole, to permit the use of the 1-in. hanger. This change was omitted from the drawing last year through error.

2. The inclination of 15/16 in. in 6⅛ in., as shown on the side elevation of the head on Sheet M. C. B. 17, is correct for the brake beam hung 14 in. above the rail, but is not correct for the standard 13-in. hanging for inside-hung beams. The drawing has been corrected to show an inclination of 1 9/32 in. in 6 in., to correspond to the 13-in. hanging, and all the vertical dimensions have been made to read from a line drawn through the center of the bottom-hanger hole and the center of the wheel. The contour of the head has not been changed in doing this.

3. The ribs bracing the under side of the lower shoe-bearing lug have been removed from the drawing, as these ribs are not actually being used on the heads today.

4. Sheet M. C. B. 17 shows a ⅝-in. radii at the ends of the shoe-bearing lugs, and the committee believes this only results in less bearing area and is of no value, and accordingly the drawing has been changed to show a ⅛-in. radius at this point and the side of the lug has been slightly tapered.

The committee recommends the adoption of these changes, which we believe to be improvements in the design of the head, without affecting its interchangeability with heads and shoes now in service.

Among the several recommendations made by your committee at last year's convention there were two, numbers 4 and 5, which were rejected on the letter ballot. They are as follows:

"That all No. 2 beams used on cars built after January 1, 1908, shall be of such dimensions that all parts of the beam will lie within the outline shown in Fig. 10 of this report, and that this outline be shown among the standard drawings.

"That on page 591 of the Proceedings for 1909, the seventh paragraph, relating to beam No. 2 be changed to read: 'Beam No. 2 must be used on cars of more than 35,000 pounds light weight, and it may be used on cars of 35,000 light weight or less.'"

For the purpose of ascertaining the reason for the objection to these two recommendations, the committee early issued to the membership of the Association a circular of inquiry, asking the roads which voted against these propositions to state their reasons to the committee. The purpose of this procedure was to secure for the committee such information as would permit it to modify the recommendations so as to make them acceptable to the objecting roads. A meager response, only, was returned.

Some of the suggestions received in reply to this circular are conflicting, but they have all been combined, as far as possible, to form a new diagram as is shown in Fig. 4.

The principal points raised related:

1. To the distance from the face of the brake head to the back of the beam, which has been changed from 5½ in. to 5 in.

2. With steel or steel-tired wheels, which may be reduced to 30 in. in diameter, there is danger with a deep beam of having the fulcrum strike the axle.

3. The location of the diagonal lines limiting the tension members of the beam has been changed to avoid confliction with some beams which are now in service.

The diagram shown in Fig. 4 is submitted for the consideration of the members with the same recommendation with which the diagram was submitted last year.

Having presented the discussion so far as it could be developed, your committee would resubmit for discussion recommendations 4 and 5 as above given, with the request that they be so modified at the convention as to make them acceptable to the members.

The report is signed by:—W. F. M. Goss (Uni. of Ill.), chairman; C. D. Young (Penn.), and R. B. Kendig (N. Y. C.)

The report was presented by C. B. Young in absence of Prof. Goss.

Discussion on Brake Shoe Equipment.

The President: The recommendations of the committee in the first part of this report, which is the part that we will consider first, are, in substance, that some further work be undertaken by the association for the purpose of connecting the results obtained under high brake shoe pressure with those upon which the association's specifications are based. Also, that in the specifications as presented in the report of 1910, paragraphs "c" and "f," be changed to read "steel or steel-tired wheel" instead of steel-tired wheel."

C. E. Fuller (U. P.): Mr. President, I move that the recommendation of the committee, reading: "That some further work be undertaken by the Association for the purpose of connecting the results obtained under high brakeshoe pressures with those upon which the Association's specifications are based," be referred to the in-coming executive committee.

I also move that the secretary be instructed to change the reading as presented in the report of 1910, paragraphs "c" and "f," to "steel or steel-tired wheel" instead of "steel-tired wheel."

The motion was seconded.

T. L. Burton (C. of N. J.): Before the motion is put, Mr. President, I would like to inquire as to the operation of this testing machine. The committee states that the shoes were tested under varying pressures, the initial speed of the machine being, in each case, 80 m. p. h., and that at each of these pressures nine stops were made. The resulting co-efficient is tabulated later on in the report. Were any provisions made in those tests for varying the axle weight or the wheel weight of the testing machine so that the preferred breaking power remained practically constant?

My reason for making this inquiry is that in raising the brakeshoe pressure from 12,000 to 20,000 lbs., if the wheel weight remains constant it will increase the percentage of the braking power about twenty-three per cent. Naturally, all other things being the same, the stop would be materially shortened and the co-efficient friction would naturally run higher than if the wheel weight were increased. So that 20,000 lbs. pressure would represent the same braking power that 12,000 lbs. would. In other words, in putting the pressure up you introduce the very important factor of the time element on the coefficient of friction. It is my understanding that the M. C. B. testing machine did not provide for varying the wheel weight, unless it has been done recently.

Mr. Young: I can only say that the machine is so constructed that it has a falling weight which gives the shoe pressure. It gives the wear of the shoe with any pressure upon the wheel at a corresponding speed. The inertia of the machine is the same throughout any of the varying pressures, whether 12,000, 16,000, 18,000 or 20,000 lbs.

Mr. Burton: Then is it not true that the coefficient of friction shown by the high pressures is materially higher than one would expect in service with the lower percentage of braking power? The point I am endeavoring to get at is that I want to emphasize the ill-effect that we get from these tremendously high shoe pressures due to the loss of the coefficient friction.

Mr. Young: I believe that the question raised by Mr. Burton ought to be referred to the committee, because I do not feel that I am fully qualified to answer. My judgment would be that the coefficient would be about the same for each of these pressures, regardless of the percentage of braking power. There may be some increase in the coefficient with the testing machine as it stands now, but if so it is very slight.

Mr. Fuller: I will incorporate the suggestion made by Mr. Young in my motion that this be referred back to the committee. It is a very important point, and one that I think should have full and deliberate consideration.

The motion was carried. The second part of the report was then considered.

C. D. Young: The recommendations for brake beams are the same as for last year as regards paragraphs 4 and 5, with the substitution of the diagram shown in Fig. 4 for old diagram 10.

R. L. Kleine (Penn.): Paragraph 4 under Brake Beams states that the drawing has been changed to show a ⅛-in. radius at this point and the side of the lug has been slightly tapered. The illustration shows that connection to be 1-16 of an inch.

C. D. Young: That is a mistake.

The President: Mr. Burton, Professor Endsley has just come in the room, and perhaps he can answer the question that you put to Mr. Young a moment ago.

Mr. Burton: The question that I raised, Professor Endsley, was in relation to increasing the brake shoe pressure without increasing the wheel load of the brake shoe machine so as to maintain a constant percentage of coefficient friction, and I raised the point whether or not we would have the right to assume that the coefficients shown under different pressures are due solely to the variations in the pressures, or whether they are due in part to a variation in the braking power. That is, if we put on the pressure from 12,000 to 20,000 lbs., why it is increased 23 per cent, about, and the stops naturally will have to be shortened and the time element is shortened.

T. E. Endsley (Purdue Univ.): Well, the only thing we can do is to use the one weight of wheel. That is equivalent to a car weighing 145,000 lbs. with 12 wheels under it. There was no difference made in choosing the different per cents. All that was done was choosing different brake shoe pressures upon a given car, like you would take a Pullman car and decide whether you were going to use 12,000 lbs. or 20,000 lbs. brake-shoe pressure. Of course, there would be some difference if you increased the rotary energy of your wheel. If you increased the rotary energy of your wheel it would decrease the coefficient friction—that is, on some brake shoes, and on other brake shoes it would increase it, because some are a little larger hot and cold, and others smaller hot and cold. But here in the test referred to in this report all that was done was to use what was equivalent to a Pullman twelve-wheel car.

The President: Referring again to part 2 of the report, the paragraphs under review of recommendations 4 and 5 contain the

statement of the committee that these recommendations were defeated last year by letter ballot, and they would like to have it discussed, if possible, this year. Mr. Seley, can you give us any light on the matter?

C. A. Seley (C. R. I. & P.): I only recall that I did object to the diagrams as presented last year for some minor change, but I cannot see that I object to it at all now, and therefore I move that the recommendation of the committee be adopted and reported to the membership for letter ballot.

The motion was carried.

TUESDAY, JUNE 20, 1911.

Rules for Loading Material.

The committee has no recommendations for changes in the present rules for loading material, except to correct some errors, for the most part typographical, that were made in the last issue of the rules. This conclusion has been reached as the result of the few changes that have been suggested during the current year, and more especially in order to give every one handling the rules more time and better opportunity to make up their minds what changes are really necessary.

It was a mistake allowing Rule 26 to go into the 1910 issue of the rules in its modified form. The rule should read:

"The cars must be jacked apart by placing one jack on each side of the coupler, separating the cars until the couplers are pulled out to the fullest extent, inserting hardwood or metal blocks (latter preferred) to completely fill the space between the horns of coupler and end of sill, and coupler release-rod chain disconnected, as shown in Figs. 2 and 3."

We have been asked to consider the rules governing the loading of rolled material of small sectional area, Rule 98 to 103, inclusive. The suggestion has been made that there seems to be the necessity for distinction in the use of center binders on loads of flexible material, pointing out those loads requiring center binders and those which do not. In fact, it has been intimated that it might be more advisable to confine the use of center binders only to the loading of small angles, channels and I-beams, and possibly setting a limit for sizes of this material which would require center binders. It is the opinion of the committee that, for the coming year, definitely specifying the application of center binders to flexible loads is a question on which its experience is too limited to distinguish, and for that reason the rules governing the handling of this material remain unchanged in this respect. The members of this association are earnestly requested to advise the committee during the coming year what, based upon their experience, they would recommend for limits of size and shape of parts for twin or triple loads of flexible material which would require center binders.

It has been suggested that possibly Rule 121, governing the loading of cylindrical boiler shells and tanks, be studied with a view of reducing the height of side blocking to a minimum consistent with safety. To do this would require more information than the committee's experience and advice from the various roads at the present time afford; therefore, the rule will remain unchanged for the present, and any modification will depend upon such advice and experience in handling that the various roads may submit.

Attention is called to the correction of several typographical errors in the last issue of the rules. They appeared principally in the rules for handling pipe, chiefly with respect to the illustrations showing a greater number of strands of wire binders than is called for by the last revision.

The changes are as follows:

1. The first three lines of Rule 112, page 97, should read: "There should be not less than three pairs of stakes to each pile when the material is 20 ft. or less in length."
2. The next to last paragraph in Rule 112, page 97, beginning, "Intermediate wiring need not be used—." Change 2 ft. to 3 ft., making the paragraph read. "Intermediate wiring need not be used when load is less than 3 ft. above car sides."
3. The title above Fig. 59, in plan, page 101, should read: "Loading one length of all pipe or tubing 12 in. or less in diameter in gondola cars—Rule 112 shows whether three or four pairs of stakes should be used."
4. The clause between the plan and elevation views of Fig. 59, page 101, should read: "Six strands or three wrappings of wire, good ⅛ in. in diameter."
5. The clause between the plan and elevation views of Fig. 60, page 103, should read: "Six strands or three wrappings of wire good ⅛ in. in diameter."
6. The clause, above end view, Fig. 61, page 105, should read: "Six strands or three wrappings of wire, good ⅛ in. in diameter."
7. Change ten strands wire to six strands wire, Figs. 57 and 58.
8. Cut out reference to Fig. 20 in note at bottom of Fig. 21, page 52. The note would then read: "10 by 12 in. minimum for double loads when bearing-piece must be bolted through floor and cleat, as shown in Fig. 22."
9. Last line of Rule 109, reading, "paragraph 99," should read, "paragraph 104."

It is reasonable to suppose that physical conditions and requirements bring up problems locally which are met by excellent suggestions for changes in the rules. Some may be of minor importance, while again others are of considerable moment. These oftentimes valuable remedies seldom reach us, hence we are at a disadvantage, because the committee less posted perhaps, in some local situations, is endeavoring to make general and specific rules for the guidance of all. It is not reaping the benefit of the many good ideas arising in handling commodities under the local conditions, which knowledge would greatly tend to increase the efficiency of the committee. The committee is endeavoring to bring about a plan by which it can derive the benefit of the broader experience, so that the rules will be still further increased in their efficiency and integrity.

The report is signed by: A. Kearney (N. & W.), chairman; R. E. Smith (A. C. L.), Wm. Moir (M. & I.), W. F. Kiesel (Penn.) and L. H. Turner (P. & L. E.).

Discussion on Rules for Loading Material.

A. Kearney (chairman of committee): Outside of the few errors or additions the committee have asked to be added to the rules, there would not have been very much to report this year. It is asked, therefore, that the committee be allowed to make the changes in the rules—I refer to the errors—and that the Rule 121 be submitted to letter ballot. During the year we have had correspondence with Mr. Arthur Hale of the American Railway Association in reference to the apparent conflict between our Rule No. 6 and A. R. A. Rule 15. The committee has not felt that it could consistently change the rule with the information it has had, but after talking the matter over with Mr. Lucore it is believed that the rule can be made harmonious, without giving up or altering any principle in either case. That matter will come up this afternoon at the meeting of the arbitration committee and it can very readily be corrected.

J. J. Tatum (B. & O.): You will remember that last year considerable discussion occurred in connection with the metal spacing blocks—under Rule 26, as it formerly read, it was optional whether we used metal or wood spacing blocks. This year the report reads "inserting hardwood or metal blocks (later preferred)," etc. Why should the word "preferred" be added there, considering the action of the convention last year. I think that word is superfluous. I will further say in connection with the matter that if we allow that to remain we will be obliged at interchange points to give defect cards for metal spacing blocks. If we allow this matter to remain as presented by the committee, a road receiving a car with metal spacing blocks may remove them and put wooden spacing blocks in their place. I think the matter should be definite and not left optional. In order to dispose of such condition as that, I move that we have the rule as it formerly was, that it be optional whether we use metal or wooden spacing blocks. I think it is important that it should be left in that form, without a statement being made that metal is preferable.

Mr. Kearney: I understand this simply erases the word "preferable?"

The President: Yes.

Mr. Kearney: We had considerable trouble with that rule. Some three years ago I thought a metal block would prevail, but we found later on that it was not satisfactory and that we would have to allow the wooden block. However, it was thought by the committee that the metal block was preferable, hence it was put in that shape. It is entirely satisfactory to the committee if the convention wishes to erase the word "preferable" and allow either; but the majority of the roads prefer metal blocks.

F. F. Gaines (Cent. of Ga.): I think, gentlemen, that the question whether you are going to use metal blocks or wooden blocks is entirely one of locality and a question of loading and one that each road has got to thresh out for itself. Roads that are running in a territory where iron and steel is abundant, prefer to use metal blocks, but if you have a branch line in a sawmill territory, where metal splicing block could not be obtained, why, it would be necessary to use wood. I think there has been some misunderstanding about the use of the word "preferable." In some cases it has been taken to imply that a defect card should be put on whenever you use a metal block or a wooden block. I think we better just simply say "wood or iron."

(Members called for the previous question.)

Mr. Tatum's motion was carried.

C. A. Seley: I move that Rule 121 go to letter ballot.

The motion was carried.

Coupler and Draft Equipment.

The standing committee on coupler and draft equipment submits the following report for the year 1911:

Numerous inquiries were received from the members relative to the question of redesigning the M. C. B. Standard coupler to provide the necessary end-ladder clearance on existing freight-equipment cars to comply with the United States safety appliance standards. The committee has considered this question in its different phases and calls attention to the fact that the association is confronted with a serious problem in the resultant effects, both to the railway companies and the manufacturers, unless a proper solution of the matter is made at this convention. It is believed that the most satisfactory way of meeting the conditions imposed is to adopt one, or not more than two, temporary standard automatic couplers, so as to provide for the necessary end clearance as affecting present freight-equipment cars.

This proposed new coupler could be designed by lengthening the shank or by increasing the length of the head between the coupler horn and pulling face of knuckle; either of which would probably introduce conditions contributory to bending of shanks and breaking or buckling of center and end sills, due to the increased length of lever arm. The idea of gaining the required space by lengthening the shank should be discouraged, as it involves changes in the end construction of the car and a greater liability of bent coupler shanks, and the committee believes that the clearance required should be gained by changing the present standard distance between inside face of knuckle and striking horn of coupler.

It is desired that in thus providing for what may be termed an emergency condition that the coupler and draft committee by no means intends to deviate from any fruitful results obtained by the association in the past years, but rather to permit the introduction of this proposed coupler to meet what it nothing more than a temporary need. It should be kept clearly in mind that this emergency coupler is not to be placed in any new equipment, but is merely an expedient to meet a required condition. This change in coupler head would increase the number of M. C. B. standard couplers. In order that the number of standards may be kept to a minimum, the members should advise the committee promptly the amount of increase in length of coupler necessary and the number of cars requiring this increase. When these replies are received it will enable the committee to decide whether it will be necessary to care for more than one additional temporary coupler. It should be borne in mind that it will be necessary to carry these emergency couplers in stock at all repair points, so as to maintain the proper end clearance when making repairs.

By referring to Sheet 23, M. C. B. proceedings of 1910, it will be seen that the dimension for the thickness of the reinforcement of the key slot on the 5-in. by 7-in. coupler is 1¾ in., and on the 5-in. by 5-in. it is 1½ in. Various manufacturers have brought this question to the attention of the committee, also the fact that there is a tendency for shrinkage cracks, which weaken the wall of the coupler shank at the point of the present V-shaped reinforcement. This has been investigated, and the committee recommends that the thickness of the reinforcement on the 5-in. by 5-in. coupler shank be made 1¾ in., and that the reinforcement on both the 5-in. by 5-in. and 5-in. by 7-in. couplers be changed in design to conform with these recommendations. Attention has been directed to the comparatively short life of the contained parts within the coupler head, because of early failure under service conditions. The M. C. B. specifications for automatic couplers state: "The couplers furnished under this specification must be made of steel, etc." The breakage failure above mentioned were found to be due, apparently, to material other than steel having been used for the parts with the head.

The evident intent at the time of formulating the above specifications was clearly to consider the contained parts within the head as included in the word "Coupler." Results from present practice leads the committee to think that the use of any other material than steel for these parts is undesirable, and it is suggested that the first paragraph under specifications for M. C. B. automatic couplers, as given on page 728, 1910 proceedings, have this sentence added, viz.: "The word 'Couplers,' as here used, includes the bar itself and the contained parts within the head, such as locks, knuckle throws, etc."

Drop-test Machine.

Difficulty has been experienced when making face tests of couplers, due to the bending and breaking of the set-screws used for holding the coupler in place. The set-screws also become so tightly wedged in the base block that it becomes necessary to drill them out. In view of the above conditions, it is suggested that the use of set-screws be abolished and the filter blocks and wedges to be used for holding the coupler in place when making such tests. This will necessitate recessing the base block. The committee has tried out this arrangement and finds it to be an improvement over the set-screws.

Purchase of Couplers.

At various times the attention of the committee has been called to the fact that the M. C. B. specifications have only been complied with in varying degrees on the part of the manufacturer, and likewise there has been considerable latitude allowed by some of the railways in the matter of their insistence that couplers purchased should meet the prescribed M. C. B. specifications. Accordingly a circular letter was sent to the members of the association, embodying the questions given below:

1. Do you purchase couplers in accordance with the M. C. B. specifications?
2. Do you have your own specifications, and if so, what are they?
3. Do you purchase couplers without specifications?
4. If you are not using the M. C. B. specifications, will you kindly give your reasons?
5. Have you any changes to suggest in the M. C. B. specifications for automatic couplers?

Replies to the above questions were received from 43 railways, and of this number 36 replied affirmatively to question No. 1. From the replies of the other seven railways it was noted that some purchasers do not require the face test, others rely entirely upon the manufacturer's integrity and some purchase in such small quantities that apparently the M. C. B. specifications are not insisted upon.

In replying to question No. 2, 32 railways advised that they adhere to the M. C. B. requirements, while 8 railways stated that they purchased couplers according to their own specifications, which ,in most cases, were practically the same as the M. C. B. requirements.

Question No. 3. Forty railways answered negatively, and three stated that they purchased couplers without specifications.

Question No. 4 was replied to by five railways, stating that they did not use the M. C. B. specifications, claiming that their own were better.

Question No. 5 brought out the following suggestions:

1. That all manufacturers provide themselves with proper testing apparatus.

The committee would advise that this is covered by the present coupler specifications.

2. That the key slot be made 1⅜ in. wide, so as to permit the use of a 1¼-in. key.

The committee does not approve this suggestion.

3. That an 8½-in. butt end be made standard.

That an 8¾-in. butt end be made standard.

This was rejected by letter ballot in 1910, and in the opinion of the committee it is undesirable to increase the number of standards.

4. That the face test either be properly enforced or that it be replaced by the guard-arm test previously used.

The committee is satisfied that the introduction of the face test has largely reduced the face breakage which was experienced in the past. Some criticism has been made relative to the severity of the present face test, and it is the intention to conduct another series of tests during the coming year to ascertain whether any modifications are necessary. The committee does not approve of the replacement of the face test by the guard-arm test.

5. That paragraph 7 be changed so as not to require serial numbers of manufacturer on draw bar.

The committee does not approve this suggestion.

6. That knuckle pins must bear a manufacturer's mark.

The committee approves this suggestion, and recommends that its identifications mark be placed on head of pins.

7. That dimension at bottom of coupler shank (Sheet 23) reading "12-in. no projection here," be increased ½ in. forward toward head of coupler so as to increase shank clearance at carrier iron.

The committee approves this suggestion.

8. That a paragraph covering the bottom operating coupler be incorporated into the specifications.

The committee does not approve this suggestion, as it is inadvisable to increase the number of standards.

9. That the knuckle pin be increased from 1⅝ in. to 1¾ in. in diameter.

The committee does not approve this suggestion, as this cannot be done without weakening the knuckle lugs of the head.

10. That the 8¾-in. dimension from inside face of knuckle to striking horn of coupler, as shown on Sheet 23, be changed to 9¼ in. as indicated by note.

The committee does not approve of this suggestion, as the 9¼-in. dimension is for new types of couplers introduced after January 1, 1909.

11. That the severity of the pulling test be increased.

The committee believes that this test can be safely increased, and will conduct tests to determine to what extent the present requirements should be increased.

12. That it is desirable to purchase knuckle pins according to chemical specifications.

The committee does not approve this suggestion. The present physical test largely determines the chemical composition of the knuckle pins.

13. That a lug as coupler-yoke gib be made standard.

The committee does not approve this suggestion.

14. That a minimum weight be established for couplers.

The committee does not approve this suggestion, as they are not in a position to set any definite figures.

15. That a distance be given from center line of coupler to center of knuckle-pivot pin.

The committee will take this recommendation under advisement. At present this is taken care of, to a certain extent, by the contour lines of the coupler.

16. That the line shown for the minimum distance knuckle should open should be properly located.

The committee would refer the member to Sheet M. C. B. 23, which now takes care of the point raised.

As outlined in the report of the previous year, it was the intention of the committee to conduct the draft-gear tests and make report to the 1911 convention. It is regretted, however, that the building of a test machine, as proposed, was prohibited by the large expense involved, and the committee can, at this time, do no more than reiterate its previous position in the matter, with the idea of carrying on the proposed tests as soon as the proper testing apparatus can be procured.

Summary.

A summary of the recommendations which the committee offers to be submitted to letter ballot, to be adopted either as standards or recommended practice, is as follows:

Standard.

1. That the key-slot reinforcement for the 5-in. by 5-in. coupler be made 1¾ in. in thickness, as shown on Sheet A, and that the V-shaped reinforcement on both the 5-in. by 5-in. and 5-in. by 7-in. coupler be changed in design, as shown on Sheet A.

2. That the specification for M. C. B. automatic couplers, as given on page 728, 1910 proceedings, have the following sentence added after the words "Must not be painted," in the fourth sentence from top of page, "The word couplers as here used includes the bar itself and the contained parts within the head, such as locks, knuckle throws, etc."

3. That knuckle pins must bear a manufacturer's mark on head of pin.

4. That dimension at bottom of coupler shank, Sheet 23, reading "12 in., no projection here," be increased ½ in. forward toward head of coupler.

Recommended Practice.

That the use of set-screws, shown on Sheet J. 1909 Coupler Report, for holding the coupler in place when making drop test, be abolished; that filler blocks and wedges, shown on Sheets B

and E, be used instead of the set-screws, and that the base block, shown on Sheet I, 1909 coupler report, be changed to conform to that shown on Sheet C.

The report is signed by:—R. N. Durborow (Penn.), chairman; G. W. Wildin (N. Y. N. H. & H.), F. W. Brazier (N. Y. N. H. & H.), F. F. Gaines (C. of Ga.), F. H. Stark (Pitts. Coal Co.), H. La Rue (C. R. I. & P.) and H. L. Trimyer (S. A. L.).

Car Wheels.

The attitude of the committee during the past year has been of a receptive nature, that is to say, awaiting developments and criticisms in regard to existing standards and recommendations made heretofore. Several modifications have been suggested in connection with the standard reference gages for mounting, inspecting and checking wheels, the circumference gage ;and also, some changes in the design and use of the standard cast-iron wheels, which are herewith presented for your consideration. The committee, as heretofore, has worked jointly with the committee representing the Association of Manufacturers of Chilled Car Wheels, on subjects relating to or affecting the efficiency of the cast-iron wheels, and has added, as an appendix to this report, a communication received from the Manufacturers' Association, which, however, is not published herewith. The point brought out by this association is, that under present conditions with high-braking pressures the limiting factor for each weight of wheel is the temperature stresses set up on account of the rapidity with which heat is generated on the surface of tread of the wheel under heavy and continuous braking.

As the present tendency is toward increased braking pressure, it is thought possible that the present weights should be raised, particularly for wheels used under cars of high tare weight, such as refrigerator cars of 60,000 lbs. marked capacity, for which at present the standard 625-lb. wheel is used. As this question was found to be quite far-reaching in its effect upon the present standards, and sufficient time was not available to give it the thorough investigation that it demands, the committee does not feel justified in making a recommendation at this time. It is considered of such importance, however, that your attention is called to same here in order that a study be made of the subject.

The following is a copy of a circular of questions sent out by the secretary to the members of this association bearing on the diameters of steel and steel-tired wheels in connection with coupler heights, efficiency of brakes, etc.:

"1. What is the maximum diameter, steel or steel-tired wheels, that can be applied to freight cars of the class to which you might consider the application of such wheels and still keep the draw-bar height not to exceed 34½ in.?

"2. What is the maximum diameter of steel or steel-tired wheel that can be applied to cars as above, and in connection with existing brake beams and heads?

"3. What is the minimum diameter of steel or steel-tired wheels that can be used in cars as above and keep the drawbar height at all times not less than 31½ in. above the rail, and also keep all parts of the truck at least 2½ in. above the top of the rail, as specified in the M. C. B. rules of interchange, bearing in mind the compression of springs, wear of brasses, journals, etc.?

"4. What is the minimum diameter of steel and steel-tired wheel that can be used in connection with your existing brakes and not reduce their efficiency on account of the angularity of brake hangers and levers?

"(a) With the brakes applied, what will be the angle of the brake-beam hanger with a line drawn from the center of the wheel to the center of the brake shoe, with wheel worn to minimum diameter and brake shoe worn to limit?

"(b) What will this angle be with maximum diameter of wheel and new brake shoe?

"5. With the maximum and minimum diameter of wheels as quoted by you, how do you propose to keep within the prescribed draw-bar height and maintain proper clearance of not less than 2½ in. for all parts of truck above the rail? Please explain in detail for each of the various types of truck."

To the above circular twenty-nine replies were received. After a careful analysis of them, it was found that the maximum diameter of steel or steel-tired wheels that can be used by most of the railroads and keep a draw-bar height not to exceed 34½ in. and be used in connection with the existing brake beams and head was 33 in., several of the roads reported that they could use 33½ in., and in a few instances 34 in. and 34½ in. In deciding upon the minimum diameter to which all-steel or steel-tired wheels should be worn, the question of maintaining a draw-bar height of not less than 31½ in.—making allowances for compression of springs, wear of journal and brasses, and also to compensate for the wear of the wheels—was duly considered. Three methods were suggested that can be used, depending upon the construction of the trucks, as follows:

1. Lining under center plate and side bearings.
2. Blocking under spring seat.
3. Lining on top of journal box.

The first-mentioned method can only be used to a limited extent where detachable center plates and side bearings are used. The second method can be adopted in cases where the clearance between the top of the bolster and truck frame is sufficient to allow for wear of journals and bearings and for necessary reduction in the diameter of the wheels. On trucks with steel side frames, this can not be done in many instances, and attention is called to this in order that greater clearance between the top of bolster and the truck frame be allowed in new construction. The third method can be used on most trucks except such as have the boxes cast solid with the frames, and consists in using two or three thicknesses of metal liners applied between the tie bars and the bottom of the journal box, when using maximum diameter of wheel. These liners to be transferred one by one to the top of the box as the diameter of the wheel decreases. With either of these methods it is possible in many cases to use a minimum wheel diameter of 30 in. The majority of the roads, however, advise that the minimum diameter that can be used under present equipment is 32 in.

From the replies that were received to the circular of inquiry, the following table was compiled, showing the number of railroads, the number of 40 and 50 ton cars operated by same, and the minimum diameter to which all-steel or steel-tired wheels could be worn on these roads:

9 roads representing 115,611, 40 & 50 ton cars, recommend 32 -in. wheels.
3 roads representing 42,582, 40 & 50 ton cars, recommended 31½-in. wheels.
1 road representing 12,186, 40 & 50 ton cars, recommends 31¼-in. wheels.
2 roads representing 49,117, 40 & 50 ton cars, recommend 31 -in. wheels.
1 road representing 101, 40 & 50 ton cars, recommends 30½-in. wheels.
2 roads representing 120,619, 45 and 50 ton cars, recommend 30-in. wheels.
1 road representing 1,492, 40 & 50 ton cars, recommends 29¾-in. wheels.
1 road representing 25,531, 40 & 50 ton cars, recommends 29½-in. wheels.

From these results the committee does not feel disposed to recommend a specific dimension as a minimum diameter at which all-steel or steel-tired wheels should be worn before replacement.

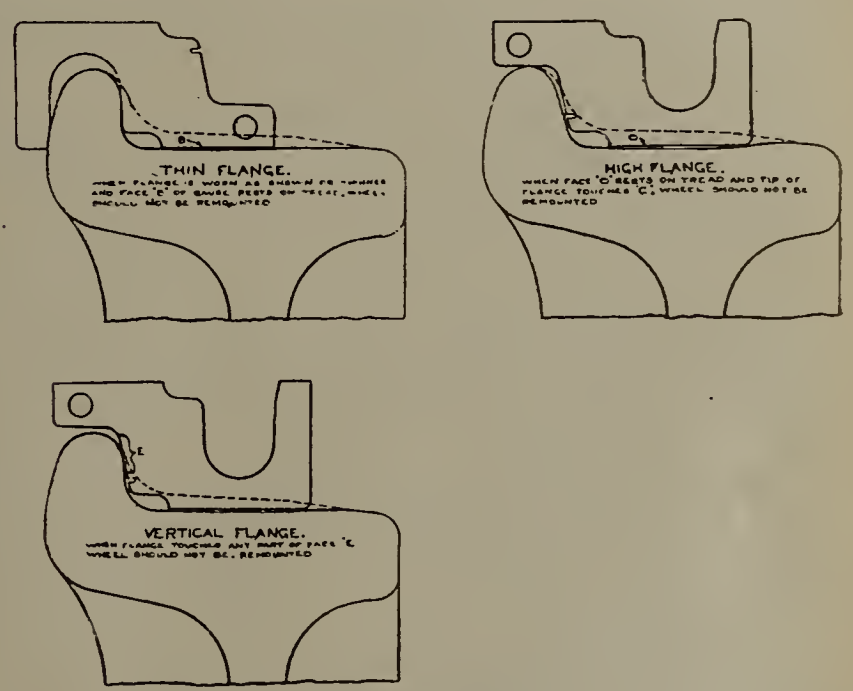

Instructions for Using Wheel Limit Gauges.

On account of the great variation in diameters due to wear that might be possible with the use of all-steel and steel-tired wheels, and the effect that this wear will have on the efficiency of the brakes due to the increased angularity of the brake hangers and levers, the committee has forwarded to the committee on train brakes all data bearing on this subject for its consideration.

Recommendations.

1. At present, three standard gages are shown on Sheet 16, standard practice, M. C. B. Proceedings, 1910, one for mounting, one for inspecting and one for checking wheels. As these gages are all slightly different, they are confusing to the shopmen, and it has been proposed that one gage be used in place of the three gages now shown. This method has been found to be entirely practical, and is, in fact, followed by many roads. The present wheel-check gage, shown on Sheet 16, M. C. B. standard, fulfills the requirements of such a gage, and it is recommended that an illustration of same be substituted for the three gages now shown on Sheet 16, of the M. C. B. standard practice. In order to better protect the gage from wear, the gaging point at the throat of the wheel has been increased from ⅛ in. to ¼ in. This has the further advantage of more nearly approximating the original location in remounting secondhand wheels.

It is also recommended that the first sentence, paragraph 3, under Mounting Wheels in Recommended Practice, be changed as follows:

"Third.—That in mounting wheels, new or secondhand, the 'standard wheel-mounting and check gage' be used in the following manner:"

2. In 1909 the Railway Club of Pittsburgh made the following suggestion:

"The dimension 4 ft. 5 3-32 in. on Fig. 6-A be changed to 4 ft. 5 5-32 in., due to not mounting more than one wheel with maximum flange thickness on the same axle. In accordance with rule 66."

This was approved by the arbitration committee in 1909 and changes made in the code of rules. The gages shown on sheet 16, however, were not changed. The dimension referred to is the distance between backs of flanges at the base line. After careful consideration, the committee does not feel that this dimension should have been increased to 4 ft. 5 5-32 in., as it will not accomplish the purpose for which this change was intended, or to prohibit the mounting of two maximum flanges on the same axle. It is, therefore, recommended that this dimension should be 4 ft. 5 3-32 in., as recommended in 1907 report. This will necessitate changing the dimension 4 ft. 5 5-32 in. on Fig 9, page 37, code of rules, and Fig. 9, page 599 of the Proceedings of 1910, back to 4t ft. 5 3-32 in.

3. The second paragraph of rule 24 in code of rules reads:

"In no case may two new wheels having maximum thick flanges be mounted on the same axle."

It is recommended that the wording of this rule be changed to the following:

"In no case should two new wheels be mounted on the same axle when the thickness of the two flanges together will exceed the thickness of one normal and one maximum flange, or 2 17-32 in.

4. The committee recommends that the standard wheel circumference gage be changed as shown in the Master Mechanics committee report on contour of tires.

5. The present method of graduating the circumference measure does not provide a definite boundary for each tape size as the tape sizes are indicated with lines. It is, therefore, recommended that instead of defining a tape size with a line, it be defined by the spaces.

6. The committee recommends that the limit gage for remounting secondhand cast-iron wheels, which is shown on Sheet 16-A of the proceedings of 1910, of the M. C. B. Association, be shown in the different positions in which it is to be used with explanatory notes as shown in Fig. 1 herewith.

7. It is recommended that the minimum flange thickness gage for new wheels, shown on Sheet 16, of the 1910 Proceedings of the M. C. B. Association, have the figure 1 5-32 in. changed to 1 11-64 in., in order that the minimum thickness of flange be as much below, as the maximum thickness of flange is above, a normal flange.

8. The Association of Manufacturers of Chilled Car Wheels suggested a few unimportant changes be made in the design of the present standard wheels, in order to improve foundry practice and reduce losses, which are recommended by the committee.

9. Manufacturers' Association also suggests some additional changes in the 675-lb. wheel, consisting in the reduction of the thickness of bracket and thickness of tread and making the contour of the plate same as 725-lb. pattern. The committee feels that it can not approve this suggestion until a more thorough investigation has been made.

10. It is also recommended that the part of the paragraph No. 8, page 763, of the Proceedings of 1910, which reads as follows:

"And the day, month and year when made, plainly formed on the inside plate in casting."

Be changed to read:

And the month, day and year when made, plainly formed on the inside plate in casting.

11. It is recommended that the diameter for all new steel and steel-tired wheels for freight cars be made 33 in.

12. For high-capacity freight cars built in the future and likely to be equipped with steel wheels, it is recommended that provisions be made in the construction of car and trucks to permit the use of wheels varying in diameter from 33 in. to 30 in.

This report is signed by:—Wm. Garstang, (C. C. C. & St. L.), chairman; A. E. Manchester (C. M. & St. P.), O. C. Cromwell (B. & O.), W. C. A. Henry (Penn.), R. W. Burnett C. P.), J. A. Pilcher (N. & W.) and R. L. Ettenger (Southern).

Discussion on Car Wheels.

F. H. Stark (Pitts. Coal Co.): I move that the report be accepted and submitted to letter ballot.

E. W. Pratt (C. & N. W.): I would like Mr. Garstang to give us a little information relative to the eleventh recommendation. It occurs to me that many roads have been using a wheel somewhat larger when they buy a steel or steel-tired wheel, feeling that they will compromise between the new and old life of the wheel by having dimensions above and below 33 in. I would like to know why the committee have set 33 in. as the maximum instead of splitting the difference.

Mr. Garstang: One of the principal reasons for the 33 in. diameter was due to the fact that all wheels under freight cars at the present time are 33 in. in diameter and that the 33 in. wheel fits into the trucks and the brakes and the connections better than any other dimension.

M. K. Barnum (Ill. Cent.): As a matter of fact, quite a number of manufacturers of all steel wheels are making a standard wheel 33½ in., and the company with which I am connected has been ordering that sized wheel for locomotive tenders and also for some of its passenger cars. So long as that only raises the center of the wheel ¼ in., it seems to me that a maximum of 33 in. should be very carefully considered.

C. A. Schroyer (C. N. & W.): While we recommend that on a steel tired wheel, I think it would be a mistake to have a steel tired wheel that had to receive several turnings before it was worn out with 33 in. as its original diameter. We calculate on turning at least 1½ in. out of that metal, and then we have got 30 in. as the outside diameter of the wheel when worn out, which, as this report indicates, affects the truck leverages and the angularity of the hanger, and the speed at which the wheel revolves. I think it would be a mistake to limit the wheel to 33 in., 33½ in or 34 in., it should be for us, because we would take them as large as we could get them, so long as the wheel did not interfere with the construction of the truck and the angularity of the brake hanger.

C. E. Chambers (C. of N. J.): I think an allowance in many different sizes of wheels should be made. In a few years it will be like it is with the coupler proposition now, and then what are you going to do if you have a 33½-in. wheel and another road's car comes along that won't take anything over a 33-in. wheel. I have heard more complaints about getting clearances down at 33½ in. and 34 in. for new cars than anything else, and I think if you use a larger wheel you are going to run up against trouble.

Mr. Garstang: I was just talking to our mechanical engineer who worked up the details of this report, and he tells me that 90 per cent of the wheel reports received recommend a 33-in. wheel. I am heartily in accord with the gentleman who has just spoken that we do not want to get two or three sizes of wheels, and if 33 in. is not right let us make it 34 in., but get some dimension and stick to it.

Mr. Barnum: I fully agree with that, but the steel tired wheel is a different proposition than a cast steel wheel and a steel wheel with a hardened surface. As a matter of fact, I do not think there are any wheels made now that would turn down to 30 in., and my idea would be to make 33 in. the nominal diameter; start with 33½ in. and turn it down to 33 in. I believe also that the rolled steel wheels are only expected to stand about two turnings. So you will never get 30 in.

W. E. Dunham (C. & N. W.): I believe that what Mr. Pratt and Mr. Barnum have stated are right in line with our best locomotive practice. I do not think anybody has had any trouble in maintaining the proper height of the draw bar on the tender with a steel tired wheel.

Mr. Pratt: Inasmuch as we have steel-tired wheels that are worn, if there should be a car that was too high we could probably make arrangements to put in a wheel that had been turned down.

Mr. Garstang: The first question that was raised in the circular sent to our committee concerned the maximum temperature of steel-tired wheels that could be applied to freight locomotives and still keep the drawbar head not to exceed 34½ in. The answer to that question was that 90 per cent of the replies received by the committee were in favor of the 33 in. wheel, and it was largely upon those replies that the committee made its report.

The President: The question before the house is on the adoption of the report of the committee and referring to letter ballot the recommendation made in it.

The motion was carried.

Mr. Fuller: I move that a committee be appointed, or else that the wheel committee be instructed to consider the fastenings for built-up wheels. We all know that we have wheels running the fastenings of which are not suitable for mountain service, and I think we ought to adopt a standard fastening for built-up wheels.

The President: This is a matter that must be taken up by the executive committee, and I will suggest that when they make up their programme for next year's convention they allot space to it.

Mr. Garstang: In connection with Mr. Fuller's suggestion, I think the committee ought to get up a drawing showing the principal dimensions of steel and steel-tired freight wheels.

The President: That suggestion will also be referred to the executive committee, Mr. Garstang.

Safety Appliances.

The committee on safety appliances has carefully considered this important subject in the limited amount of time that it has had since the issuance of the order of the Interstate Commerce Commission in the matter of United States Safety Appliance Standards, dated March 13, 1911, which is a modification of the original order issued October 13, 1910. The United States Safety Appliance Standards prescribed in the Interstate Commerce Commission's order of March 13, 1911, must be applied to all equipment built on or after July 1, 1911. As to applying the United States Safety Appliance Standards prescribed in the Interstate Commerce Commission's order of March 13, 1911, to equipment built prior to July 1, 1911, the order of the Commission prescribed the following:

"(a) Carriers are not required to change the brakes from right to left side of steel or steel-underframe cars with platform end sills, or to change the end ladders on such cars except when such appliances are renewed, at which time they must be made to comply with the standards prescribed in said order of March 13, 1911.

"(b) Carriers are granted an extension of five years from July 1, 1911, to change the location of brakes on all cars other than those designated in paragraph (a) to comply with the standards prescribed in said order.

"(c) Carriers are granted an extension of five years from July 1, 1911, to comply with the standards prescribed in said order in

respect of all brake specifications contained therein, other than those designated in paragraphs (a) and (b), on cars of all classes.

"(d) Carriers are not required to make changes to secure additional end-ladder clearance on cars that have 10 or more inches end-ladder clearance, within 30 in. of side of car, until car is shopped for work amounting to practically rebuilding body of car, at which time they must be made to comply with the standards prescribed in said order.

"(e) Carriers are granted an extension of five years from July 1, 1911, to change cars having less than 10 in. end-ladder clearance, within 30 in. of side of car, to comply with the standards prescribed in said order.

"(f) Carriers are granted an extension of five years from July 1, 1911, to change and apply all other appliances on freight-train cars to comply with the standards prescribed in said order, except that when a car is shopped for work amounting to practically rebuilding body of car it must then be equipped according to the standards prescribed in said order in respect to handholds, running boards, ladders, sill steps and brake staffs: Provided. That the extension of time herein granted is not to be construed as relieving carriers from complying with the provisions of Section 4 of the Act of March 2, 1893, as amended April 1, 1896 and March 2, 1903.

"(g) Carriers are not required to change the location of handholds (except end handholds under end sills), ladders, sill steps, brake wheels and brake staffs on freight-train cars where the appliances are within 3 in. of the location, except that when cars undergo regular repairs they must be made to comply with the standards prescribed in said order.

"(h) Carriers are granted an extension of three years from July 1, 1911, to change passenger-train cars to comply with the standards prescribed in said order."

The committee appended the standards prescribed by the commission.

The matter of appending to this report, drawings or cuts showing the manner of application of the United States Safety Appliance Standards to passenger-train cars was considered by the committee, but owing to the various local conditions and practices to be met by the various roads of the country in applying these standards and also to the limited amount of time in which to gather the requisite information since the issuance of the final order of the Interstate Commerce Commission the committee has not prepared drawings or cuts.

The committee recommends that the Association's standards for safety appliances, Plates 19 to 19-P, be withdrawn and that the United States Safety Appliance Standards be substituted. Plates 19-A to 19-P contain cuts showing the matter of application of safety appliances to the various type of cars and these plates also contain texts pertaining specifically to the car illustrated by the respective plate. These texts were a great help to car inspectors and other desiring to gain information quickly, and it is recommended by the committee that plates with texts of the United States Safety Appliance Standards to cover the various types of cars be submitted at the next convention.

The committee recommends that designating marks for cars equipped with the United States Safety Appliance Standards be adopted. The Interstate Commerce Commission's order prescribes that all cars built on or after July 1, 1911, shall be equipped with the United States Safety Appliance Standards, whereas there are various exceptions in the case of equipment built prior to July 1, 1911, it will be necessary to have two designating marks that a car may readily show whether it comes under the rules for equipment built on or after July 1, 1911, or under the rules for equipment built prior to July 1, 1911.

The committee recommends the following designating mark for cars built on or after July 1, 1911:

United States
Safety-Appliances
Standard.

and for cars built prior to July 1, 1911—

United States
Safety-Appliances

These markings to be used on each side of the car; letters if stenciled to be not less than 1 in. in height and as per the M. C. B. Recommended Practice for lettering for freight cars, sheet M; letters if on a metal badge plate to be not less than ½ in. in height and raised not less than 1-16 in .and have not less than ⅛ in. bar or staff. The arrangement of the words should be as near as possible as shown above.

A metal badge plate 4 in. x 12 in., with the proper marking, is preferred; one plate to be secured on each side of the car by four bolts or rivets if on metal cars, and by four bolts or screws if on wooden cars; the bolts, rivets or screws to be not less than ¼ in. diameter. The badge plate to be made of malleable iron.

The marking for cars built after July 1, 1911, shows the word "standard," and this word "standard" designates that the safety appliances on the car comply with the law in every respect, and furthermore, this same marking should be applied to any car that is equipped with safety appliances that complies with the law in every detail, regardless of the date the car was built.

The word "standard" is omitted in the marking of the cars built prior to July 1, 1911, and having safety appliances which are permissible (not standard) for service by complying with the order of the Interstate Commerce Commission, which permits a variation on cars built prior to July 1, 1911, that is not permitted on cars built after that date.

The report is signed by:—Theo. H. Curtis (L. & N.), chairman; C. B. Young (C. B. & Q.), Henry Bartlett (B. & M.), T. M. Ramsdell (C. & O.), M. K. Barnum (I. C.), W. O. Thompson (N. Y. C. & H. R.) and A. LaMar (Penna.).

Discussion on Safety Appliances.

E. W. Pratt (C. & N. W.): I do not quite understand this lettering. It seems to me that the only difference in stenciling is in relation to the word "standard." We are very likely to have our painters stencil that word on the cars which should not have it on, as well as those which should, I do not see what the idea is of putting any such stenciling as that at all on cars not standard. Perhaps the committee had some reason in mind.

C. A. Seley (C. R. I. & P.): The stenciling on the vast majority of present cars changed over will have the stenciling as indicated by the committee, without the word "standard." That word "standard" will only be applied to new cars, which you will buy in the near future, and I should doubt the advisability of giving the painter a stencil with the word "standard" on it until the road had arranged to have complete standard cars. It is going to be some little time, I think, before that can be arranged by any road. Of course, any new car which is to be repaired will have the stencil in accordance with the new standard. It will require a little effort and care, as Mr. Pratt suggests, but I do not think we will have quite the amount of trouble which he has in mind.

J. F. De Voy (C. M. & St. P.): I did not get your meaning with relation to the metal badge plate. Do you mean that will do away with the stenciling of the date on the side of the car? We do not understand why it should be that way. Is that a ruling?

Mr. Curtis: Yes.

Mr. De Voy: Would it be optional to do it as we are doing it now?

Mr. Curtis: It will be optional; you may use whichever method you choose. You will find it hard to find room enough on some of the flat cars to put the stenciling on the cars, and the badge plate can be used with much greater ease and comfort to the man putting it on.

Mr. De Voy: And, of course, with a great deal more comfort from the commercial end of it. Some one will do some business we might do in our own shops.

C. A. Schroyer (C. & N. W.): What is the object of putting this badge plate on, or even stenciling it? Does not the condition of the car imply whether it is standard or not?

Mr. Seley: I might answer Mr. Schroyer, while I am on my feet, and say that it was understood with the inspectors who attended the conference committee that we would mark our cars so that they could be designated as United States standard. It is not required by law, but we had that practical understanding that we would do it. I did not know the malleable plate had been so named until hearing the remarks of Mr. Curtis in presenting the report of the committee. I think that should be changed to cast plate, and you could use either a gray-iron casting or a malleable iron casting as you saw fit.

F. H. Clark (B. & O.): Inasmuch as the committee recognize the fact that on a good many of our cars we have not much room for additional lettering or stenciling, and as the committee has already abbreviated United States to U. S., why not abbreviate Safety Appliances also in the same way, making it read U. S. S. A.?

Mr. Curtis: I was a member of the conference committee, and as a matter of good faith with the inspectors I feel that they expect we should use the words "Safety Appliances."

Mr. Schroyer: If there is a badge plate that goes on that car with the initials indicating what it means, it is just as good as spelling out the whole word. We are doing that on many of our cars, putting the initials of the road on the car, instead of spelling out the whole word, and I am in favor of using the initials.

C. D. Young (C., B. & Q.): I believe there will be a good deal of confusion between the two types of stencils for the cars which have been built prior to and those which were built after the passage of the law, and it has occurred to me that it might be desirable for future cars, those coming up to the requirements of the law, to have a seal of some form in a small stencil or casting, and leave the other abbreviations or spelling out of the words, for the old cars brought up to the requirements so far as it is necessary. I think it is very desirable to reduce the amount of lettering all we possibly can. As everybody knows, it costs us more now to letter our cars than it does to paint them, and we are putting more lettering on, and it simply increases the expense every time you put more letters on your car, but if a seal could be worked out for the future cars that would designate the thing that we require, that this car has been built in accordance with the standard prescribed by law, it would soon become known to anyone whenever that seal appeared on the car that the car was in accordance with the requirements, and it would also give you the difference between the old cars which had been brought up to the standard and the new cars which had been built in accordance with the requirements.

G. W. Wildin (N. Y., N. H. & H.): I do not like this designation—the old car that is brought up to the standard is just as standard as a new car built to standard.

Mr. Crawford: If it is brought up to standard, yes.

Mr. Wildin: You have two standards, one for old cars and one for new cars, which fill the laws as a new one does. If you get the 10-in. clearance, you have the standard for old equipment. It looks to me as if there should be a plainer designation.

Mr. Schroyer: I think Mr. Wildin is correct in that respect. The old car, when equipped in compliance with the law as modified, has everything that is required under the law, and there should not be anything on the car to indicate a difference between an old car and a new one.

C. E. Fuller (U. P.): I ask Mr. Schroyer how his inspector is going to determine between a car built after July first and the car that has left your shop with these modifications. In one case he is justified in accepting the car without a penalty, while in the other case he is not justified in accepting it, and he cannot take the time to measure the cars to see if they conform to the requirements. He has to know something definite about it. He has five years to bring these cars up. It is the inspector I am looking out for.

Mr. Schroyer: I regret to have the inspector brought in it at all. If we are to expect to educate the inspectors to know all about the safety appliances, starting from the sides and ends of the cars, we must get a different class of inspectors. If we instruct our inspectors that on and after a certain date cars must not be accepted unless they comply with the law, there will be a good deal of confusion. This should not be done for our own inspectors, but for the accommodation of the inspectors of the Interstate Commerce Commission. I think that is the object that we ought to keep in mind.

Mr. Wildin: I think our own inspectors will have to know something about it until all cars are completed. It seems to me the committee did wrong in leaving out the date. It seems to me that the date when the car was built should be applied on all cars. If you say "U. S. Safety Appliances" and put the date on the car, the car people will know in each case which car complies with the law, and nobody can go would have all the information. He would not have all the information desired.

D. F. Crawford (Penn.): Mr. Wildin stated the inspector would have all the information. He would not have all the information unless he made measurements. He would not know whether the car must maintain to the standard or the standard as modified by the order of the commission. There are many cars running their lives out with grab irons and appliances not fully in accordance with the standards, but they will be accepted under the order. They will vary as much as 3 in. from the standard, which is perfectly permissible. It was the intention of the committee, as I understand it, to mark these cars which will run for many years with variations from the standard U. S. Safety Appliances. Those which conform strictly to the standards, and which we expect other roads to maintain for us and which we expect to maintain for other roads at the standard, will be marked "U. S. Safety Appliances, Standard." There is a clear line of demarkation between the two, which I think can be supported legally.

J. F. Deems (N. Y. C. & H. R.): I confess I don't grasp the necessity for these two markings. The instructions which have gone out on the New York Central lines are to the effect that no car shall be marked "U. S. Safety Appliances" unless it is absolutely standard in every way. I think that is the correct interpretation. As to these cars that are changed, the 3-in., to which Mr. Crawford referred, we know that car will be allowed to be passed in interchange, and will not be penalized, but it is not marked, and if one of the inspectors of the government singles that car out and objects to it, we can defend ourselves under the law, and I do not believe the car should be marked. I believe it is misleading. I do not think any car should be marked except a car that conforms absolutely to the rules laid down for a new car. Many of our old cars that are made to conform to the modifications will pass in interchange without difficulty. If we take advantage of the latitude given us under the modifications that are secured, that car is not marked, but goes through all right. I think it is a mistake to mark it and it will result in a great deal of confusion. Perhaps I am wrong about it, but we discussed it fully and decided, while many of the cars would run and pass and we would not be penalized for them, they would not be marked because they did not conform absolutely to the standards. If a car is made to conform absolutely, it does not make any difference whether it is old or new.

M. K. Barnum (Ill. Cent.): Our road had a conference of everyone interested in the safety appliance question, and we took exactly the position Mr. Deems has outlined, and have only marked cars, whether new or old, that are standard in every detail.

R. L. Kleine (Penn.): The marking of the cars, not strictly in accordance with the United States Standard Safety Appliance Laws, which do not conform to the requirements of the government, is for the purpose of helping on the car repairmen and inspectors. When that car goes to the shop and the safety appliances, after the five-year period are within 3 in. of certain dimensions, that car can go out of the shop, otherwise the car would have to be changed to the U. S. Safety Appliances. For that reason the markings should prevail on the cars.

Mr. Seley: I think the position of the committee is entirely consistent for the very reason Mr. Kleine states, that the expiration of the five year period, what are you going to do, how are you going to know—are you going over each car and measure it to find if you can safely accept it? If the car is stenciled by some method or other, then when the inspector sees the car after the expiration of a five-year period he will know whether the car complies with the law or not, without going into the measurement of these safety appliances as to whether it is acceptable or not. It is the easiest way out of the trouble, I believe, in order to comply with the legal requirements, that we should follow the recommendation of the committee, and that all cars fully and completely equipped in accordance with the standard shall show the word "standard," and those which comply with the modifications shall show "United States Safety Appliances." I think I can say safely that it will be a breach of faith with the inspectors unless we do this very thing.

Mr. Schroyer: I want to make a motion, that instead of using the words "United States," that the initials "U. S." be used.

Mr. Curtis: That is optional in the report. As chairman of the committee I will take it upon myself to change the words "malleable iron" to "metal"—the badge plate shall be made of metal, so that you can make it of brass, malleable iron or cast iron.

Mr. Clark: I move the words "Safety Appliances" be abbreviated to "S. A."

Mr. Crawford: I would like to ask if the wording of this is an agreement with the U. S. Safety Appliance inspectors or merely the result of our own conference committee?

Mr. Schroyer: I believe there would be no objection whatever on the part of the safety appliance men to having that abbreviation.

Mr. Curtis: These words "United States Safety Appliance, Standard," are taken from the law. It is not required by the law. It was in a nice way requested by the inspectors of the Interstate Commerce Commission that we would use this designation. In good faith the conference committee took the matter under consideration, and I feel it safe in saying it was implied by us and understood by the inspectors that a marking of this order would be placed on the cars.

Mr. Clark: If it is understood that "U. S. S. A." means United States Safety Appliances, is not that a practical compliance with the request of the inspectors, and could not we go even further while we are at it, and put the letter "S" on the cars, and have it understood that the letter "S" means these things? Why should we put a lot of white paint on our cars where it is not necessary?

Mr. Curtis: We have the privilege of doing what we please in this matter.

C. D. Young (C. B. & Q.): I would like to amend the motion to have the committee submit a drawing showing the metal plate, or a stencil plate, which would give the marking for the cars built strictly in accordance with the standard, and preferably to have some designating character such as the combining of the four letters, or one single letter in a circle of some character, so that anyone looking at that seal or stamp will understand exactly what is meant by it.

Mr. Schroyer: I second the amendment.

The President: Do you accept the amendment, Mr. Clark?

Mr. Clark: I do not understand the purpose of the amendment.

Mr. Schroyer: It means the adoption of a uniform branding.

Mr. Clark: I am in favor of that, want to see it simple. We want to cut out a lot of the lettering. We have too much now. We can make some abbreviations so that it will help out in that respect. My suggestion was simply to make it U. S. S. A.—that means just as much as to spell it out. We can go even further than that, as Mr. Young suggested, and put the letter "S" in a circle, or something of that sort. That, I think, will cover the ideas of the inspectors, although I have not talked with them about it. This is simply an agreement, and the agreement is to have some sort of marking added on the cars, to show that the car complies with the standards. We do not need a lot of lettering in order to make that clear.

T. L. Trimyer (S. A. L.): I would say that we have received a drawing from the association showing this stencil, and are actually receiving cars now with the stencil on them. I notice a good many roads are repairing cars, making them conform to the requirements, and a good many of them are in service and are stenciled. It occurs to me it is quite late now to make a change. It has been specified on a large lot of new equipment, and is actually being applied in service.

M. K. Barnum (Ill. Cent.): At the meeting of the committee yesterday, I believe the question of making a drawing, as suggested by Mr. Young, was brought up.

Mr. Curtis: The time was not sufficient. Mr. Lamar tried to make a drawing, but he had no tools.

Mr. Barnum: It seems to me very important that this association should officially take up the work done by the conference committee and support any agreement or understanding that that committee had with the Interstate Commerce inspectors, and I think it would be very inconsistent for the association to adopt anything that did not follow these lines; but, of course, it would be left to the roads to adopt them if they saw fit. It seems to me that we ought to carry out the letter and the spirit of the agreement in that conference as far as possible, and then, if it is thought best to reduce the lettering, have another conference with that object in view.

Mr. Crawford: I move that the report of the committee be adopted.

The President: There are two pending motions before the house—a motion made by Mr. Clark and an amendment by Mr. Young. The amendment by Mr. Young will be put first, and that was the committee submit a drawing showing the metal plate or a stencil plate which would give the markings for the cars, and that it was preferable to have some designating character, such as the combining of the four letters or one single letter in a circle. (The amendment was defeated.)

The President: We will now put to vote the motion made by Mr. Clark, that the words "U. S. Safety Appliances" be abbervi-ated to "U. S. S. A."

(This motion was defeated.)

Mr. Crawford's motion was put to vote and adopted.

Revision of Code of Tests.

The committee appointed to revise the M. C. B. specifications for testing apparatus and code of test for freight triple valves in

connection with 100-car trains begs to submit the following proposed revision and respectfully requests its discharge:

Condition of Tests.

Triple valves will be tested on a rack representing the piping of a one-hundred (100) car train. All cocks, angles and connections will be as nearly as possible identical with those in train service. The rack shall conform to blue-print C-11379 (Rev. 3-9-09) in the hands of the committee, which gives the proper fittings, piping, cylinders, auxiliary reservoirs, main reservoirs, automatic brake valves, etc.

The main reservoir capacity shall be approximately 57,000 cu. in. The capacity of each auxiliary reservoir shall be such as will, with a pressure of 70 lbs., produce 50 lbs. pressure in its brake cylinder when fully equalized in service application with 8 in. piston travel.

The air supply for the test rack shall be obtained from a locomotive type of air compressor having a capacity of from 80 to 120 c. ft. of free air per minute. The compressor to be controlled by a single top-pump governor adjusted to maintain 110 lbs. main reservoir pressure.

Tests will be made with a brake-pipe pressure of 70 lbs., except when otherwise specified.

With brake-pipe and auxiliary reservoirs charged to 70 lbs., the section of branch pipe between the cut-out cocks and triple valves, also the triple valves; should be tested with soap suds and leakage eliminated. Branch pipe cut-out cocks should then be closed and brake valve placed in lap position; break-pipe leakage should then not exceed 2 lbs. per minute.

Brake-cylinder packing leathers must be maintained in good condition and free from leakage.

All tests shall be made with 8 in. piston travel, except when otherwise specified.

Triples must be so constructed that they can be secured and operated on apparatus conforming to Diagram D-15611(which shows triple valve end of auxiliary reservoir, branch-pipe union and location of bosses for retaining valve pipe, with detail dimen-

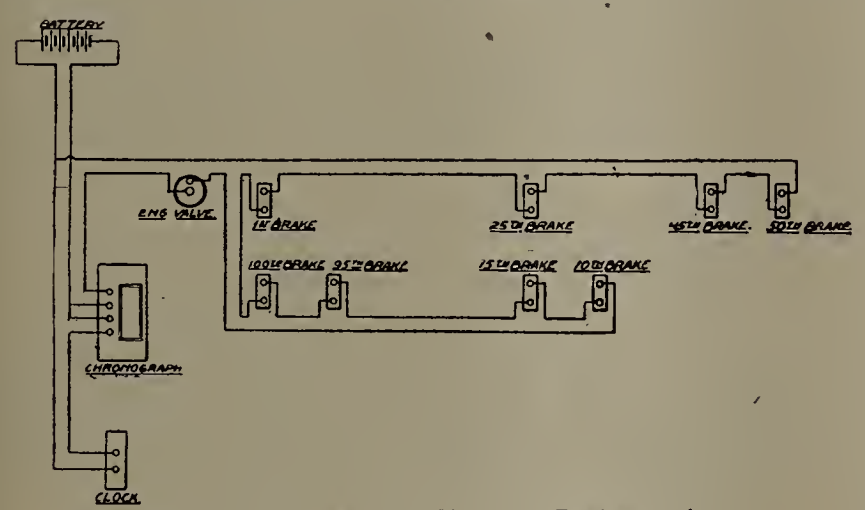

Fig. 1.—Wiring Plan, M. C. B. Brake Rack.

sions of each as well as detail dimensions between these parts when in the relative position they would occupy if triple valve were in place).

The auxiliary reservoirs, brake pipe and brake cylinder of the first, twenty-fifth, fiftieth, seventy-fifth and one hundredth brakes shall be fitted with test gages. All gages must be calibrated and maintained in good condition. Brake No. 1 shall be fitted with two recording pressure gages, one to be connected to the brake-pipe branch-pipe, the other to the brake cylinder and brake No. 100 shall be fitted with a test gage connected to the brake cylinder. The attachment of electric circuit closers, also the general arrangement of the electric circuit wiring, shall be as shown in Fig. 1.

Tests shall be repeated three times under the same general condition, a record being taken of each test, also the average result of each three tests. The room temperature at the time of the tests shall be recorded, also humidity.

The essentials of a quick-action triple valve are, charging, service application, graduation, release and quick action.

Individual Triple-Valve Tests.

Charging Tests.

Not less than three triples, selected at random, shall be tested, as follows:

With the triple valve cut out at the branch pipe cut-out cock; the auxiliary reservoir empty; and 90-lb. brake-pipe pressure maintained, the triple valve should be cut in.

A. Under these conditions the auxiliary reservoir should be charged from zero to 70 lbs. in not more than 90 seconds nor less than 70 seconds.

B. When triple is in normal release position, the auxiliary reservoir should be charged from zero to 70 lbs. in not more than 60 seconds and not less than 40 seconds.

Service Application Tests.

A.—(To determine sensitiveness to service application.)

1. Three valves, selected at random, shall be taken for this test and each tried separately. They will be tested on the first brake of the rack using the brake pipe only of the first car and locomotive, having the engine and tender brakes cut out.

2. These triple valves should apply in service when the brake-pipe pressure is reduced by direct discharge to the atmosphere through an orifice which will reduce brake-pipe pressure from 70 to 60 lbs., in 16 to 18 seconds, with brake valve and triple valves on locomotive and first brake cut out.

3. In preparing for this test, insert the required disk in union shown in Fig. 2 with all cocks closed, after which open cock C and start test by opening cock B.

B.—(Graduating Test.)

1. Three valves, selected at random, shall be taken for this test and each tried separately. They will be tested on the first brake of the rack, using the brake pipe only of the first car and locomotive having the engine and tender brakes cut out.

2. The first admission to the cylinder should be made with a reduction of brake-pipe pressure not exceeding 5 lbs.; each succeeding reduction should reduce the pressure in the auxiliary reservoir not to exceed 3 lbs., until equalization takes place. The pressure in the brake pipe should not be more than 3 lbs. lower than the equalized pressure in the brake cylinder and reservoir at equalization.

C.—(Holding Test.)

Three valves selected at random will be taken for this test and each tried separately on the first brake on the rack, using the brake pipe only of the locomotive and the first car, having the triple valves cut out on engine and tender. The one brake will be applied, admitting as nearly as may be 15 lbs. into the brake cylinder following a service application. Record of pressures in the auxiliary reservoir cylinder and brake pipe will be taken as follows:

First. At completion of application.
Second. In five minutes.
Third. In ten minutes.
Fourth. In fifteen minutes.

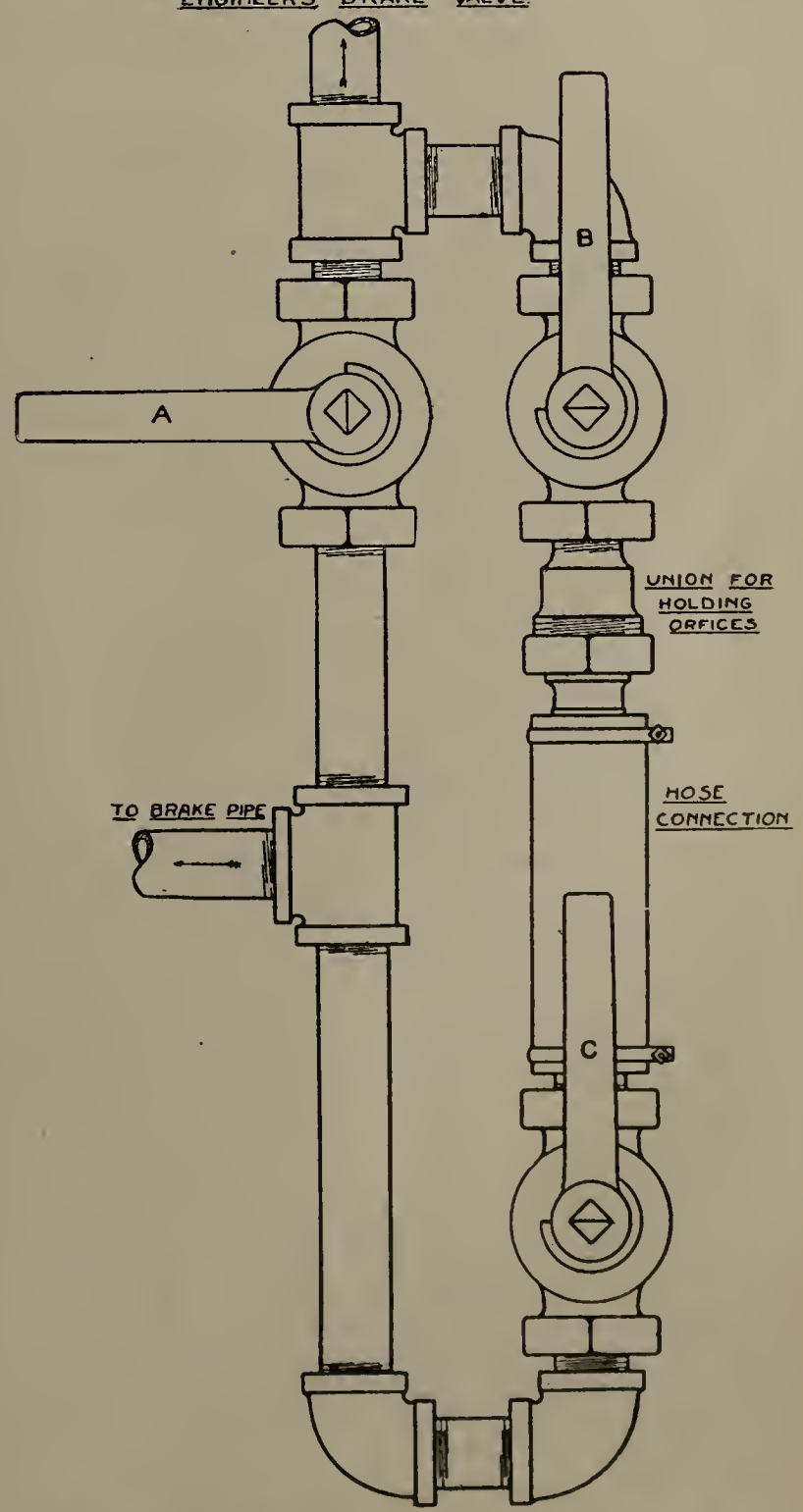

Fig. 2.—Code Tests—Piping Arrangement for Brake Test.

In this test, when a constant brake-pipe pressure is maintained, the brake-cylinder pressure must not be increased more than 5 lbs. in 5 minutes.

D.—(Release Test.)

Three triple valves, selected at random, shall be taken for this test and each tried separately. They will be tried on the first brake of the rack, using the brake pipe only of the first car and locomotive having the engine and tender brakes cut out. When the triple goes to normal release position it must exhaust the air from the brake cylinder from 50 to zero pounds in not more than 15 seconds.

When the triple goes to retarded release position it must exhaust the air from the brake cylinder from 50 to zero pounds in not more than 40 seconds.

Emergency Application Tests.
(To determine sensitiveness to quick action.)

Three triple valves, selected at random, shall be taken for this test and tried separately on the first brake of the rack. During this test the locomotive and tender triples are to be cut out.

A.—These triple valves must give a quick-action application when the brake-pipe pressure is reduced by direct discharge to the atmosphere through disk with a 14-64 in. orifice.

B.—These triple valves must not give a quick-action application when the brake-pipe pressure is reduced by direct discharge to the atmosphere through a disk with 10-64 in. orifice.

C.—(Holding test.) Three triple valves, selected at random, shall be taken for this test and tried separately on the first brake on the rack. The brake will be applied in quick action by moving the brake-valve handle to emergency position, where it must remain until completion of test for the purpose of insuring the discharge of all brake-pipe pressure. Record of pressure in auxiliary reservoir and brake cylinder will be taken as follows:

First. At completion of application.
Second. In five minutes.
Third. In ten minutes.
Fourth. In fifteen minutes.

In this test the auxiliary reservoir and brake-cylinder pressure must not show a reduction of more than 5 lbs. in 5 minutes.

Rack Tests.
Service Application Tests.

A.—(Service Equalization.)

With a service reduction of 25 lbs. from brake-pipe pressure, a brake-cylinder pressure of not less than 48 lbs., nor more than 52 lbs., must be obtained.

B.—(Graduating Test.)

1. A reduction of 5 lbs. in brake-pipe pressure should apply lightly the 100 brakes. However, the brake-cylinder pressure may not be sufficient to show on all test gages.

2. A further reduction of 4 lbs. to 6 lbs. should increase the cylinder pressure of all brakes.

3. A further reduction, making a total of 25 lbs., should equalize the pressure between the auxiliary reservoirs and brake cylinders.

C.—(Service application time.)

Brakes will be applied by reducing brake-pipe pressure 10 lbs. There shall not be more than 25 seconds difference in the time of obtaining 10 lbs. pressure in the cylinders of the first and one hundredth brakes.

Emergency Application Tests.

A.—(Quick action, time and pressure.)

The one hundredth brake must be applied with at least 45 lbs. pressure in 6¼ seconds from the movement of the brake-valve handle to emergency position and at least 55 lbs. in 7 seconds. The final maximum pressure in this test must not be less than 15 per cent nor more than 20 per cent above the pressure given by the same brake in full service application. This test will also be made to determine that quick action is obtained with:

First—Four inches piston travel.
Second—Twelve inches piston travel.

(Note.—The object of this test is to secure, as nearly as possible, uniformity of pressures in brake cylinders in an emergency application and uniformity of time required to obtain the pressures; to secure a minimum length of stop and a minimum of shock, and of trains parting.)

B.—(To determine whether quick action will follow a service application.)

Using the 100 brakes, make a service reduction such as will give 20 lbs. cylinder pressure on the first brake. Then place the brake-valve handle in emergency position, which should cause quick action operation of all triple valves. The pressure in the first cylinder will be increased or decreased by steps of about 5 lbs. until the point at which quick action commences or ceases is determined.

C.—(Quick-action jumping test.)

With brakes Nos. 1, 2 and 3 cut out, quick action should be obtained with the remainder of the brakes by an emergency reduction, and the time, from the movement of the brake-valve handle to emergency position to obtain 45 and 55 lbs. cylinder pressure on the one hundredth brake, should not be increased more than one second over that required to obtain the same pressures with all brakes cut in. This test should be repeated with groups of three brakes cut out, consisting of Nos. 2-3-4, 4-5-6 and 5-6-7, and the time from the movement of the brake-valve handle to emergency position to obtain 45 and 55 lbs. cylinder pressure in the one hundredth brake should be the same as with all brakes cut in. These tests will also be made with piston travel of 4 in.

Holding Tests.

A.—(Following a service application.)

The one hundred brakes will be applied, admitting, as nearly as may be, 15 lbs. into the cylinder of the first brake. Record of pressures in the auxiliary reservoirs and cylinders will be taken at all record points as follows:

First. At completion of application.
Second. In five minutes.
Third. In ten minutes.
Fourth. In fifteen minutes.

In this test any increase of brake-cylinder pressure should be in proportion to the reduction in brake-pipe pressure due to leakage.

B.—(Following a quick-action application.)

The 100 brakes will be applied in quick action by placing the brake-valve handle in emergency position, where it will be left until completion of test, for the purpose of insuring the discharge of all brake-pipe pressure. Record of pressures in auxiliary reservoirs and cylinders will be taken at all record points as follows:

First. At completion of application.
Second. In five minutes.
Third. In ten minutes.
Fourth. In fifteen minutes.

The results of this test must not indicate an excessive amount of back leakage into brake pipe.

Release Tests.

A.—(Release Time.)

The 100 brakes shall be applied with an 18 lb. service reduction of brake-pipe pressure and brake valve then placed in release position. Time will be taken from the movement of the brake valve into release position until pressure is reduced to 5 lbs. in the cylinder of the first brake. The pressure in the cylinder of the first brake should not reduce to 5 lbs. in less than 18 seconds nor more than 25 seconds.

(Note.—Main reservoir pressure must be 110 lbs. at time of release.)

The report is signed by:—A. J. Cota (C. B. & Q.), chairman; J. R. Alexander (Penn.), and F. H. Scheffer (N. C. & St. L.).

The report was presented by J. R. Alexander in the absence of A. J. Cota, Chairman.

C. E. Fuller (U. P.): Before going on to the discussion of this subject, I would like to go back to the report on safety appliances. We have a standard safety appliance code in the M. C. B. Association, and, to be consistent with the work that we have done this morning, I would move that the report of the committee on safety appliances be referred to letter ballot, including the requirements of the U. S. Safety Appliances which are to be adopted as the standard of this association, the same to be referred to letter ballot.

R. L. Kleine (Penn.): That brings up the other question that was left over to the committee on standards with regard to the safety appliances. That would eliminate questions Nos. 11, 24, 25, 53 and 55, and still leaves open the following to be acted on: 12, hand brake for freight cars to work with air. The suggestion on that was to refer the matter to the committee on hand brake and signal equipment. Nos. 48 and 49, hand brakes on passenger cars to be worked with air, and that also was to be referred to the committee on train brake and signal equipment. And 60, to advance the 7-16 in. brake chain to be standard, to be referred to letter ballot.

D. F. Crawford (Penn.): I move that the two points referred to by Mr. Kleine which should be referred to the committee on train brake and signal equipment be so referred, and that the third question be referred to the Association for letter ballot.

The motion was carried.

Discussion of Code Tests.

E. W. Pratt (C. & N. W.): I know the amount of work that was required of this committee in getting up this report as I was fortunately a member of the committee for several years; hence, I wish to criticise the report very reluctantly. But I notice under Service Application Tests, section A, numeral 2, the reduction in the brake pipe travel is shown by the number of pounds reduced in a given time. This, to my mind, is a very great improvement over what has been the practice heretofore, namely, giving the size of orifice through which the air must escape. But in other parts of this report, under Emergency Application Tests, it gives the size of the orifice that we should use in order to produce quick action. It seems to me it would be well for the committee to make that a given reduction in a given time, the same as the one I have just referred to. To be sure, it states here that there is nothing but the locomotive pipe and the car pipe cut in. However, the size of locomotives have been changed within the past year or two from 50 ft. to 150 ft., and it does make a great deal of difference as to the length of the engine whether the size of the orifice will give the same time reduction in one case as in another. There is another thing that the committee should explain to us, and that is the style of brake valve, if a brake valve is to be used in making these tests, that is, to be standard for this testing apparatus; and also it would be more than interesting for us to know what triple valves are best employed for the purposes of this test.

J. W. Alexander (Penn.): In reply to Mr. Pratt, I wish to say that the opening is given for the emergency test. It would be extremely difficult to determine that by time limit, for the reason that the movement of air is almost instantaneous through an opening of that character, and it is a question of getting the orifice down to a size in which a quick, sudden movement of the air will affect the triple valve at a certain distance from it, and these tests were made on. In regard to the type of brake valve, the Figs. 1 and 2 show the attachment, but you can put any type of brake valve—Westinghouse or New York or any other type—

on the test, and this also shows the kind of triple valves that have been subjected to these tests and possibly these tests may be said to be practically all of those in general use on the different roads of the country.

The report was accepted and recommendations submitted to letter ballot.

Refrigerator Cars.

The committee was instructed to investigate and report on three separate questions, as follows:

The uniform height of refrigerator cars from the rail to the floor.

Adoption of standard drip cup for refrigerators.

Relatively small ice tanks.

Uniform Height of Refrigerator Cars from Rail to Floor.

The investigation of this subject shows that a large majority of the refrigerators built within the last ten years or more have the height of floor varying between 48 in. and 50 in. above the rail, but the Santa Fe Refrigerator Dispatch has some 6,000 cars with floors approximately 46½ in. above the rail. We have not been able to learn of any cars which have the floor at 42 in. above the rail, as stated in the Railroad Refrigerator Service Association Circular 84, dated June 26, 1909.

It is also found that all freight-house platforms of the largest roads and packing-houses vary in height from 42 in. to 46 in. above the rail, and understand that the American Railway Engineering Association has not yet adopted any standard height for freight-house platforms; we therefore suggest that the Master Car Builders' Association adopt a minimum of 48 in. as the recommended practice for refrigerator-car floors, and that the matter be taken up with the American Railway Engineering Association with the view of having them adopt 46 in. as the maximum height of freight-house platforms, as we believe that this will make ample allowance between the bottom of refrigerator doors and top of platforms, so as to avoid trouble about opening the doors at freight houses.

Standard Drip Cup for Refrigerators.

In Circular 73 the Railroad Refrigerator Service Association specifies the following requirements for an ideal drip cup:

It must keep the lower end of drain pipe submerged in water when tanks contain ice during summer or winter.

It must prevent water in drip cup from freezing in winter when cars are iced without salt.

It must prevent cold air from entering car in winter when cars are not iced.

The committee has not yet been able to find any drip cup which will meet all of these requirements, which now seem impossible to meet in full, but the committee will continue to investigate the subject and make supplementary report.

Relatively Small Ice Tanks.

Refrigerator cars may be divided into two general classes:—Fresh-meat cars; and fruit and dairy cars.

The best and most modern refrigerators are used for shipping fresh meats, and these are provided with ice tanks which experience has proven to be amply large. Fresh-meat cars use crushed ice and salt, and a total capacity of 5,000 lbs. per car has been found ample for all ordinary service conditions; the committee, therefore, recommends that tanks of 5,000 lbs. ice capacity be adopted as the minimum for such cars.

For fruit and dairy refrigerators a minimum of 3,000 lbs. per tank, or 6,000 lbs. per car, is recommended. Our investigation leads us to believe that the complaints mentioned by the Railroad Refrigerator Service Association have been caused by old cars that had ice tanks much smaller than the present practice, which are rapidly disappearing from service, and we believe tanks of the size above recommended are amply large to protect shipments under all ordinary conditions.

The traffic department will be the first to object to encroaching any further than necessary on the loading space of the car, and there seems to be no present necessity for increasing the outside length of the car beyond about 40 ft., the present size of the largest refrigerator.

The report is signed by:—M. K. Barnum (I. C.), chairman; J. S. Chambers (A. C. L.) G. W. Lillie (St. L. & S. F.), W. E. Sharp (Armour Car Lines), E. Posson (A. T. & S. F.), W. C. Arp (Vandalia) and R S. Miller N. Y. C. & St. L.).

Discussion on Refrigerator Cars.

Mr. Barnum (chairman of committee): In regard to the freight house platforms, it is stated that the committee intended to take up with the American Railway and Maintenance of Way Association the matter of having them adopt 46 in. as the maximum height of freight house platforms. Since the report was written we believe that should be made 44 in., and we wish to correct the report to read 44 in.

I have the supplemental report here, reading as follows:

The committee has continued its investigation of a standard drip cup for refrigerator cars, and has obtained from a number of the roads which are the largest owners of refrigerators and also from the packing companies drawings of their standard drain cups, together with reports on their performance. All of these drain cups are alike in their essential features, consisting in:

1. A depression or cup below the level of the drip pan into which the water drains; and

2. A drain pipe, the top of which project above the bottom of the cup to a varying height, thereby retaining some water in the cup round about the pipe, which, with the inverted cap fitted over the top of the drain pipe, forms a water seal. This arrangement permits the melted ice to overflow into the drain pipe and at the same time prevents the admission of warm air in summer; but it will not obviate freezing in winter, and the drain pipe must be plugged to exclude cold air in freezing weather. All of the replies received to our inquiries indicate that there are no serious complaints about the last two features. Our investigation leads us to believe that the combination of requirements specified by the Railroad Refrigerator Service Association are mechanically impossible.

I might give a little further explanation of our reason for changing the maximum height of platform from 46 in. to 44 in. We found that the average refrigerator car door has a bevel of about 2 in., which would make the outside edge of the door about 2 in. below the floor of the car; and there are quite a good many refrigerator doors that have locks which project a little below the outside edge of the door, and we thought that it was advisable to increase the minimum distance between the car floor and the top of the platform to 4 in., which we believe will be ample for all practical purposes.

J. J. Hennessey (C. M. & St. P.): It does not seem to me that the report of the committee has covered the point that a great many roads are much interested in, and that is the matter of salt water drippings.

Mr. Barnum: We disposed of that last year.

Mr. Hennessey: The committee disposed of it in a certain sense last year, but at the same time I do not see that the private lines are making much of an effort to get any device that will carry the salt water drippings clear to the tracks. I think it is well understood that especially the Maintenance of Way people are very much exercised at so much salt water drippings on metal bridges, tie plates, etc., and I believe this is a question which should be gone into very thoroughly and a greater effort made than has already been made to ascertain if some device cannot be worked up which can be adopted as a standard to prevent salt water drippings from refrigerator cars.

Mr. Barnum: I will recall to the mind of Mr. Hennessey and that of the other members of the association the fact of last year the committee on refrigerator cars recommended that certain principles be followed for the purpose of retaining within the icing tanks the salt water drippings and discharging them at the icing stations. We considered that that covered the subject, and the committee was discharged as having completed its work in that particular. It then remained to take up with the companies owning refrigerator cars and using salted ice the matter of carrying out the instructions. I have made some inquiries as to how the work is progressing and I find that the packing houses, particularly the owners of refrigerator cars using salted ice, have tried several devices in the form of valves for the purpose of retaining the salted water and discharging it at icing stations, and I find that they have been successful in retaining the water, but have had some trouble with the valves freezing, thus making it difficult to open them at the icing stations. I was informed by the representatives of several packing houses in Chicago that they were fitting up all cars as they passed through their shops with such valves, and I think so far as the committee of this association is concerned we have done all that we can in that direction, and if anything further is to be done it will have to be taken up by the American Railway Association with the private car owners who handle the refrigerator cars. Perhaps Mr. Sharp can give some additional information on this matter which will be of interest.

W. E. Sharp (Armour Car Lines): The supplemental report of Mr. Barnum covers that point. We have tested several valves, and much to our surprise we have had difficulty in operating them; not in holding the brine, but the valve must be placed at the lowest point on the tank in order to drain the entire tank, and, as that is the coldest place in the tank, the valve freezes. A remark was made that not much effort was apparently being made by the owners of refrigerator cars to overcome the annoyance from the dripping of salt water. We have not said anything about it, but we have been busy and there is no intention on our part to go to sleep on the subject. We have a number of cars equipped with valves of different types. We are not operating them, because it would be a serious matter to undertake to operate a valve until you know it is reliable and that you can draw the water off at the icing stations.

We invite the committee and the individual members of the association to co-operate with us on this matter and come to our shops and see what we are doing. I feel free to say that the other packers, as well as the company that I represent, are going to continue their efforts and accomplish just what you want us to accomplish, and that by another year there will be a decided improvement in that direction.

A. Stewart (Southern): I move that the recommendations of the committee be referred to letter ballot.

The motion was carried.

WEDNESDAY, JUNE 21, 1911.

Consolidation.

F. H. Clark (chairman of committee):—At the meeting last year the committee on consolidation presented rather a long report, and about the only thing that they did not cover in that report was the question of the legality of the proposed consolidation. The committee was continued at that time and instructed by the executive committee to look into the question of the legality of the proposal and to report at this meeting. We have not prepared a written report, but we simply report that we are advised that there is no legal objection to the consolidation of the two associations.

C. A. Seley (C. R. I. & P.):—I move that the report of the committee be received and the committee continued.

(The motion was seconded.)

G. W. Wildin N. Y. N. H. & H.):—I think it is about time that we got down to something definite in this matter. I think every member here ought to express himself one way or the other on this question. Now, as the representative of the New Haven road I want to cast the vote of that road for consolidation, and I would like to hear from other members of the association here along that same line. I think we have dilly dallied on this matter long enough. Now, so long as there is no legal objection to the consolidation, let us vote on it one way or the other. If we do not want consolidation, let us say so. If we do want consolidation, why then let us say that we do.

(The question was called for and the motion carried.)

Mr. Wildin:—I rise for information, Mr. President. Now that this committee has been continued I would like to ask what it is going to do?

C. A. Schroyer (C. & N. W.):—As a member of the committee I would advise the gentleman that we are not going to do anything (laughter).

Mr. Wildin:—I move that the committee be instructed to present a plan for consolidation at the next convention.

(The motion was lost.)

Revision of Rules of Interchange.

The railway clubs and members have submitted their proposed changes in the rules and these have been considered, and the recommendations of your committee are submitted herewith:

Rule 2.—The committee suggests the following modification of the first paragraph of this rule: "No car having defects constituting a violation of the law should be offered in interchange. Cars, if defective, under M. C. B. Rules, must be properly carded when offered in interchange. Empty cars offered in interchange must be accepted if in safe and serviceable conditions, the receiving road to be the judge in cases not provided for in Rules 32 to 38, inclusive.

"Loaded cars offered in interchange must be accepted, except that receiving line may reject cars not loaded in accordance with the Rules for Loading Materials, A. R. A. Car Service Rule 15 to apply (see page —) when transfer or rearrangement of load is necessary.

"When it becomes necessary to transfer a load, such car, when empty, may be returned to the delivering line, in which case all defects objected to must be designated on a return card of form shown on page 77, filled in with ink or black indelible pencil and placed on car adjacent to the destination card.

"Balance of rule to remain as at present."

Rule 3.—The committee recommends that the rule be changed to read:

"If a car has defects for which the owners are not responsible, the receiving line shall require that a defect card be securely attached to the car, as per Rule 14."

Rule 4.—The Vandalia R. R. Co., the St. Louis Railway Club, and the Railway Club of Pittsburgh suggest in Rule 4, add new paragraph, viz.:

"Defect cards shall not be required for any damage that is so slight that no repairs are necessary."

The suggestion is approved, but the committee would recommend that it be made a new paragraph under Rule 3.

Rule 5.—It is suggested that the word "cardboard" be added after the word "be" in the first line.

The above suggestion meets with the approval of the committee.

Rule 9.—The committee approves the following revision of this rule to show necessary information in tabulated form:

"M. C. B. couplers or parts thereof applied and removed.
- New or secondhand.
- Make or name of coupler.
- Steel or malleable.
- Size of shank.
- Size of butt.
- Complete, or name of part or parts.
- Open or closed knuckle.
- Yoke or stem attachment.
- Part or parts scrapped.

"Wheels and axles R. & R.
- Cast or solid steel.
- New or secondhand.
- Box numbers (see Rule 14).
- Cause of removal and reference to M. C. B. rule under which all defective wheels are removed.

"Journal bearings R. & R.
- Solid, filled or other kind.
- Length of bearings.
- Box number (see Rule 14).

"Metal brake beams or parts thereof R. & R.
- Make, or name and beam.
- New or secondhand.
- Complete, or part or parts.
- Cause of removal.
- Parts or parts scrapped.

"Brake shoes R. & R.
- Cast or reinforced.

"Kind of tripule valve removed and applied."

Last paragraph of Rule 9 relative to removal of load in order to make repairs, to remain as at present.

The committee approves the following suggestions: Fourth paragraph, change word "open" to "slotted" and word "closed" to "solid." Add the following: "When triple valve or cylinder is cleaned, the initial of road and date of last cleaning must be shown."

Rule 12.—The committee would recommend that the rule be changed to read:

"The evidence of a joint inspector or the joint evidence of two inspectors, one representing the owner of the car and the other representing a railroad company, that the repairs are not proper, shall be final: the evidence to be signed only after an actual inspection has been made." Remainder of rule to remain as at present.

Rule 17.—The committee approves the suggestion to add to end of last paragraph: "Fir or oak may be substituted for pine when splicing longitudinal sills."

Rule 18.—The committee suggests eliminating "Except on cars offered in interchange" from third paragraph and refers the suggestion regarding the standardization of coupler with 8½-in. butt end to the committee on couplers and draft attachments.

Rule 20.—The committee approves the suggestion of adding the words "measuring 31½ in. or less" after "loaded car" in the tenth line. Also the suggestion that a period be placed after the word "thereof" in the ninth line, beginning therefrom a new sentence reading: "A loaded car measuring 31½ in. or less should be adjusted to 33½ in. or within a ¼ in. thereof . . ." following with the balance of the rule after eliminating the phrase "and when it is necessary to alter a loaded car it should be adjusted to 33½ in., or within a ¼ in thereof."

Rule 21.—The committee does not approve the suggestion that the following should be embodied in this rule: "Charging car owners for any temporary repairs made to get cars home when necessary on account of owner's responsibility."

Rule 22.—The committee recommends that the rule be changed as follows:

"Draft timbers must not be spliced. Longitudinal sills may be spliced at both ends, except that not more than two adjacent sills may be spliced at same end of car. The splicing of any sill between cross-tie timbers will not be allowed.

"The splice may be located either side of body bolster, but the nearest point of any splice must not be within 12 in. of same, excepting center sills, which must be spliced between body bolster and cross-tie timber, but not within 24 in. of body bolster.

"In splicing longitudinal sills other than center sills, if same are less than 12 in. in depth, the plan shown in either Fig. 8 or 9-B shall be followed. If the sills are 12 in. or more in depth, the plan shown in either Fig. 9 or 9-B shall be followed. In splicing center sills the plan shown in Fig. 9-B shall be followed.

"Sills of foreign cars shall be spliced as above provided. "Cars delivered in interchange with center sills spliced in accordance with Fig. 9-A will be accepted.

"(Last paragraph to remain as at present.)

"(Figs. 8, 9 9-A and 9-B should be relocated and shown together. Figs. A, B and C to remain as at present.)"

Rule 24.—The committee recommends that the second paragraph of this rule be changed to read:

"In no case should two new wheels be mounted on the same axle when the thickness of the two flanges together will exceed the thickness of one normal and one maximum flange, or 2 17/32 in."

Rule 30.—The committee proposes the following:

That the first paragraph of this rule, covering the weighing and restenciling of cars, be eliminated, and that Rule 11, of the code of car-service rules adopted by the American Railway Association, be substituted therefor, as follows:

(a) The date (month and year), also weight and capacity, should be stenciled on each new car as it comes from the car works, under the supervision of the owner's inspector. The scales used for this purpose should be tested by the railroad company's inspector, provision to this effect to be incorporated in the contract covering purchase of the equipment.

(b) Wooden cars one year old should be reweighed and restenciled, the weight to be followed by one star; cars two years old should be again weighed and stenciled, the weight to be followed by two stars; cars three or more years old should be again weighed and stenciled, the weight to be followed by three stars, which will indicate final weight.

(c) Steel cars should be reweighed and restenciled after they have been in service twelve months, the weight to be followed by three stars, indicating final weight.

(d) If cars are materially changed by reason of new appliances or otherwise, they should be reweighed and restenciled without change in the number of stars.

(e) Unless the owners instructs otherwise, any car without stenciling, or with a variation of 500 lbs., should be immediately reweighed and restenciled and car owner notified of old and new weights. The Official Railway Equipment Register will designate the proper officer to whom these special reports should be made.

(f) The date (month and year) of each reweighing should be stenciled the same as provided for new cars in paragraph (a).

Cars must be cleaned before reweighing.

Rule 32.—The committee approves adding new paragraph as follows:

"Defect cards shall not be required for any damage so slight that no repairs are necessary, the receiving line to be the judge."

Rule 33.—The committee would recommend that the rule be changed to read:

"Material missing from bodies of cars offered in interchange, except grain doors, water troughs and attachments, nuts, body truss-rod saddles on bolsters, roof boards, ventilated side and end doors unless car is so stenciled, wooden door caps, side and end fascia and all inside or concealed parts of cars."

Rule 37.—The committee approves of the suggestion regarding

the change in the heading of the rule which should read:

"Combination of damages to cars with wood underframe or composite wood and metal underframes which denote unfair usage, if existing at same end of car." Also the change of word 'or' in the third line to 'and.'

Rule 40.—The committee would recommend a new rule as follows:

"Damaged end sill, accompanied by damage to draft timber (or its substitute) or longitudinal sill, and damage to either coupler body or pocket."

Rule 43.—The committee approves the suggestion that the rule be changed to read: "Damaged corner and end posts, if necessitating the renewal of more than two posts."

Also suggests a new paragraph, reading: "This will include damage to upper structure of cars with metal underframes."

A new heading to cover steel cars should be added as follows:

"All Steel or all Steel Underframe Cars."

A new rule relating to steel cars is recommended as follows: "Damage to bodies of all steel cars, or damage to underframe of all-steel underframe cars, when necessary to repair, if caused by unfair usage (delivering company responsible). When repairs exceed the combinations as covered by Rules 37 to 43, inclusive, owners' authority must be obtained before repairs are made. Longitudinal sills, end sills and other steel parts of cars which become defective due to corrosion and which were not damaged in accident or by unfair usage (owners responsible)."

Rule 44.—The committee would recommend the following addition:

"The transfer or readjustment of lading as prescribed in A. R. A. Rule 15, see page — (delivering company responsible)."

Rule 53.—The addition of two new paragraphs is suggested as follows: "After September 1, 1912, all freight cars offered in interchange not equipped with pressure-retaining valve (delivering company responsible)."

"After September 1, 1912, no cars will be accepted in interchange unless equipped with M. C. B. quick, action triple."

The committee approves of the suggestion regarding pressure-retaining valves and would approve the suggestion relating to quick-action triple valves with the modification that the words 'standard 1¼-in. train line, angle cocks and' be omitted.

Rule 57.—The committee approves adding after the words "triple valves" the words, "brake pipe air strainer or dirt collector."

Rule 58.—The committee suggests that the cut illustrating the label be changed so as to show the name of the road or purchaser.

Rule 59.—The committee would approve of the suggestion that the words "rust or" be added after the words "account of" in second line.

Rule 60.—The committee approves the suggestions that the word "marked" in the fourth line be changed to read "stenciled." The additions after the word "the" in third line. "Initial of road together with:" and at end of rule. "Triple valves cleaned should be tested on an M. C. B. test rack."

Rule 64.—The committee would suggest that rule be changed to read:

"Material missing from trucks of cars offered in interchange except journal-box lids and nuts.

Rule 66.—The committee approves the addition to this rule reading:

"After September 1, 1915, cars equipped with wooden or trussed wooden brake beams will not be accepted in interchange."

Wheels.

Rule 70.—The committee approves change of rule to read:

"Cars equipped with forged steel or steel-tired wheels and so stenciled, if found with cast-iron or cast-steel wheels."

"Forged steel or steel-tired wheels may be substituted for cast-steel wheels."

And the following addition: "Cars equipped with cast-steel wheels and so stenciled, if found with cast-iron wheels."

Rule 75.—The committee approves the omission of the following words:

"Flange over $1\frac{7}{16}$ in. thick for cast-iron wheels, standards of 1903, 1904, 1905 and 1906 (see Fig. 6), or."

Rule 76.—The Central Railway Club recommends that the matter of devising a gauge and determining the depth that a wheel tread can be worn before necessary to remove be referred to th Wheel Committee for the adoption of a gage and limit.

The committee suggests that this matter be referred to the car wheel committee.

Rule 83.—Mr. W. A. Nettleton suggests an M. C. B. standard gage or method for measuring the thickness of service metal of rolled-steel or steel-tired wheels.

The committee approves the suggestion changing the rule, omitting Fig. 6 and changing Fig. 9 from 4 ft. $5\frac{5}{32}$ in. to 4 ft. $5\frac{5}{32}$ in. The suggestion of Mr. Nettleton is referred to the wheel committee.

Rule 85.—Add after the words "worn out" in second line, "the length of journal increased ½ in. over standard length."

This suggestion meets with the approval of your committee.

Rule 86.—The wheel-seat 5-inch journal, Table I, given as 6¼ in., should be 6¾ inches. This is a typographical error and should be corrected.

Improper Repairs.

Rule 91.—The suggestion of elimination of this rule meets with the approval of the committee.

Rule 92.—The suggestion of the elimination of this rule is approved by the committee.

Rule 96.—The committee approves that this rule be eliminated.

Rule 101.—The committee would recommend to the executive committee the appointment of a committee on uniform secondhand and scrap pieces for wheels or the reference to the car wheel committee of such suggested changes in this rule as relate to prices for wheels. The price for new 33-in. cast-iron wheel, new, $9.50, is wrong; it should be $9.00. This is a typographical error and will be corrected.

Rule 103.—The second paragraph of this rule should be omitted, as it is covered by Rule 10.

Rule 104.—It is suggested for this rule—Air-brake Material: Prices for release valve handle for 8-in. equipment should be changed to 10 cents, instead of 8 cents, or the same as for 10-in. equipment, as they are identical.

Second item, page 51, reading ¾ in., should read pipe, ⅜ in., per foot.

Add the following items:

	8-inch	10-inch
Release valve rubber seat	$$0.02	$0.02
Release valve vent valve complete	.10	.10
Air-hose coupling-guard pin	.10	.10

Omit item:

Triple cylinder bushing renewed	$1.12	$1.12

This item was recommended to the arbitration committee last year as "Triple cylinder bushing reground or refitted" and should be properly placed under Rule No. 115, as Rule 104 covers only material charges.

Change price of 'triple check-valve case" to 1.00 1.00

Material: Prices for coupler parts should be adjusted so that the same compare more closely with the cost, also that the details will correspond with the prices for complete couplers which will simplify the billing transactions. At the present time the detail credits for secondhand parts of couplers removed exceed the total value of complete secondhand coupler applied. Proposed change as follows:

Coupler body, one, new steel, 5 by 5 in. shank	$5.75 instead of	$6.50
Coupler body, one, new steel, 5 by 7 in shank	6.50 instead of	7.75
Coupler knuckle, one, new, solid	2.25 instead of	2.00
Coupler lock, one, new	.50 instead of	.40

No changes in scrap credits.

The committee approves of the suggestions covering prices for air-brake materials and coupler parts.

The recommendation increasing the price of mineral paint, is approved, but your committee would suggest 6 cents per pound instead of 8 cents. The second item, page 51, viz.; pipe, should read ⅜-inch per foot instead of ¾-inch. This is a typographical error and should be corrected.

The committee would recommend that the price for applying handhold, one, applied, net, be increased from 25 cents to 40 cents.

Rule 108.—The committee recommends that a new paragraph be added as follows:

"In the case of defective couplers, when another make is applied, credits shall be confined to the body, lock, knuckle and knuckle pin."

Rule 111.—The committee would suggest that the charges for weighing and restenciling cars be increased as follows:

Stock cars, net	$1.00
Other cars, net	.75

On page 57, the thirteenth line from the bottom, should read $14.64, instead of $16.64. This is a typographical error and should be corrected.

Rule 113.—The committee suggests changing length of carrier iron from four to six inches is approved by your committee.

Rule 114.—It is suggested adding paragraph as follows: "Applying brake hangers when brake beam is applied," and to second paragraph: "Also side siding when side sill or side plate is removed or replaced," and new paragraph to be added:

"Applying side sheathing where side sill or side plate under sheathing is renewed or replaced."

Your committee approves the above suggestions.

Rule 115.—The committee approves the following changes:

Cut-out cock, grinding in., R. & R.	$0.30
Triple cylinder bushing reground or refitted	1.12
Triple-piston packing ring, fitted	.22
Dirt collectors in branch pipe, cleaned, drained and stenciled	.05

The item reading "Retaining valve repaired, 35 cents, is wrong; it should be:

Retaining valve repaired	$0.25

Details.

Retaining-valve handle, R. & R.	$0.02
Retaining-valve case, R. & R.	.01
Retaining-valve, ground in	.05
Retaining-valve cock key, ground in	.15
Retaining-valve cock key and spring, R. & R.	.02
	$0.25

Rule 119.—Exceptions have been offered as follows: "Except in case of trucks of 50,000-pound capacity or less, when railroad destroying the car may elect to retain trucks and settle for them (with the exception of the wheels) at scrap or secondhand value, in accordance with M. C. B. Rules, except those belonging to cars of individual ownership."

This suggestion is approved by the committee.

Rule 120.—The committee approves of the following changes and additions:

Trucks.

First Item:

50,000 lbs. capacity and less, with metal transoms and wooden bolsters, per pair.....$215.00

Second Item:

70,000 lbs. capacity, but under 80,000 lbs., with wooden bolster, per pair..... 215.00

New Item:

50,000 lbs. capacity, all metal trucks, per pair..... 225.00

Bodies.

New Item:

Gondola, all-metal, twin-drop bottom, 40 tons capacity, but less than 50 tons capacity, 36 feet but under 40 feet.. 790.00

First item under steel cars (bodies) third line, add the word "over" between the words "over" and "end sills." Add the word "body" before the words "metal bolsters" in eighth line top of page 70.

The committee suggests changing the recommendation of the Western Ry. Club from $60 to $40.

Rule 124.—The adoption of some plan or provision is recommended to compel furnishing of shortest route home for movement of cars under this rule, that such cars may be delivered at the nearest home point on owning line, rather than furnish the original routing of the car and allow it to be billed accordingly.

The committee can not at this time approve these suggestions, but would suggest that the executive committee communicate with the American Railway Association to ascertain whether such a provision in the rules of interchange is desirable.

Furnishing Material.

Rule 126.—Regarding the question of furnishing materials on requisition for repairs to cars while on foreign lines, the committee would suggest that the matter be referred to the Executive Committee with the view of obtaining an opinion from the Interstate Commerce Commission as to the responsibility for freight charges on such shipments.

Appendix.

Rule 1.—In the third line omit the word "and" and after the word "inspection" and add "and adjusting brakes."

Rule 3 (a), 3 (b), 3 (c).—Rule to read:

"Line expenses shall consist of the expense of terminal cleaning, icing, lubrication (oil, waste, tallow and labor).

"Oil lighting (oil, chimneys, wicks, burners, shades).

"Gas lighting (gas, mantles, tips, domes, globes, bulbs, bowls).

"Electric lighting (fuses, incandescent bulbs, charging currents).

"Heating (terminal heating and coal furnished for individual car heaters en route) candles and broken glass." These suggestions meet with the approval of the committee.

Rule 12 (a), 12 (b).—The following changes are suggested and approved. "On electrically lighted cars, furnished to foreign roads, where no agreement is made, the following charge shall be made per day for use of batteries:

	Depreciation	Current	Total
32 cells	46 cents	29 cents	75 cents
16 cells	23 cents	14 cents	37 cents"

Change last paragraph to read:

"On electrically lighted cars a charge of $3 per 1,000 miles, with a maximum charge per car per month of $30 shall be made to cover rental of the electric lighting apparatus and depreciation of batteries."

Referred to the committee on train lighting.

Wheels—Cast-Iron.

Rule 14 (a), 14 (b), 14 (c), 14 (d), 14 (e), 14 (f).—This rule be changed to read:

"Worn flanges: flanges having flat vertical surfaces extending more than ⅞-in. from tread, or, flanges 1 in. thick or less, gauged at a point ⅜ in. above tread," and that Rule 14-c to read:

"On flange 1 in. thick or less, flange having flat vertical surface ⅞-in or more." Fig. 4-a—reference to this figure should be omitted.

These suggestions are approved by the committee.

Wheels—Steel-Tired.

Rule 15 (a), 15 (b), 15 (c).—Rule 15-b should be changed to read:

"Worn flange or tire; with flange 1⅛ in. thick or less, or having flat vertical spot extending more, than 1 in. from tread, or with tire thinner than shown in Figs. 1, 2, 3 and 4."

This is approved by the committee.

Rule 21.—The committee would suggest that rule be changed to read:

Air hose applied must be made in accordance with specifications for M. C. B. standard 1⅜-in. hose and so labeled.

Prices for Maintenance of Passenger Cars.

The committee recommends the following:

Item 14. Change to $1.75. Item 15. Change to $1.00. Item 16. Change to $0.70. Item 17. Omit reference to mail cars and add to Item No. 15.

New Items:

Bowls, gas, at cost. Globes, gas, at cost. Bulbs, gas, at cost.

Item 22. Change to read: Electric lighting material incandescent bulbs, fuses, etc., at cost.

Gas-lighting materials, mantles, tips, bulbs, globes, domes, bowls, etc., at cost. Electric current, illuminating oil and Pintsch gas to remain separate items. Rearrangement of price-list in alphabetical order and separate columns for new secondhand and scrap prices.

Item 19. Change note to read: (No additional charge for cleaning trucks.) Item 21. Change to read: Brake shoes, Diamond S or steel back, applied, each, no credit for scrap, $0.50.

New Item:

Hose, 1⅝-in., steam, new, complete with fittings.....$6.50

Item 58. Change to read: Wheels, solid steel or steel-tired, new or re-tired, cost.

Add footnote to list of prices as follows:

Cost price to be charged for material in list above.

Jos. W. Taylor,
Secretary.

The Arbitration Committee as a result of a meeting Tuesday afternoon modified one or two of its recommendations, as follows:

Rule 2. Change the second suggestion in the rule to read: "Cars having defects for which delivering company is responsible must be properly carded when offered in interchange."

Add paragraph as follows: "Owners must receive their own cars when offered home, subject to the provisions of these rules."

Change paragraph concerning loaded cars in interchange to read: "Loaded cars offered in interchange must be accepted except that the receiving line may reject leaking tank cars and cars not loaded in accordance with the rules for loading materials, A. R. A. Car Service Rule 15 to apply when transfer or rearrangement of load is necessary.

Change the last paragraph to read; "When it becomes necessary to transfer load, such car, when empty, may be returned to the delivering line. In case cars are rejected by the receiving road and returned to the delivering company, all of the defects objected to must be designated on a return card of the form shown on page 77, filled in with ink or black indelible pencil and placed on the car adjacent to the designation card." (Under M. C. B. couplers for parts thereof, etc.)

Rule 104. The committee would change the first paragraph of its decision to read as follows: The committee approves of the suggestion on covering prices for aid brake materials and coupler parts as outlined in the first recommendation, except the item for air hose coupling guard pin."

Rule 52. The committee would recommend the following additional paragraph: "Lag screws must not be used on cars stenciled United States Safety Appliances, Standard, or on cars stenciled United States Safety Appliances."

The report of the arbitration on committee, as amended, was accepted and adopted.

Prices for Labor and Material for Steel Cars.

The committee does not think it advisable to make any radical changes in prices for repairs to individual parts at this time, as it is impracticable to designate the extent of damage to the individual part on the various classes of cars, and establish a stiplated amount to make necessary repairs, for the reason that there are various parts of cars slightly damaged, which do not interfere with the safety for service or impair the strength of the car. Where it is found necessary to make extensive repairs, the rules as now recommended should be changed to the rivet basis; hourly labor charges and material prices will cover all requirements in making necessary repairs to this class of equipment for the present. In considering this subject, it was found that the parts of steel cars not included on the rivet basis are already covered by the present rules established for repairs to wooden-car equipment and which will govern.

The recommendations of the committee are as follows: Eliminate all present rules on page 58 of the 1910 Code of Rules, with reference to repairs to steel cars, and substitute the following: All rivets ½-in. diameter or over, 12 cents net per rivet which covers removal and replacing of rivets, including removing, fitting, punching or drilling holes when applying patches or splicing and replacing damaged parts, not to include straightening. All rivets ¼-in. diameter and less than ½-in. diameter, 7 cents net per rivet, which covers removal and replacing of rivets, including removing fitting, punching or drilling holes when applying patches or splices and replacing damaged parts, not to include straightening.

Straightening or repairing parts removed from damaged car, 60 cents per 100 lbs. Straightening or repairing parts in place on damaged car; also any part that requires straightening, repairing or renewing, not included on rivet basis, 24 cents per hour.

Paragraph showing steel-scrap credits to be eliminated from Rule 111, on page 58; also Rule 107, on page 51 to be eliminated, and charges and scrap credits shown in Rule 104, on page 51, change to read as follows:

	Charge.	Credit.
Steel, plate and structural, per pound....	.03	.00½
Steel, pressed and flanged, per pound....	.04½	.00½

In making repairs to cars on a rivet basis, the cost of removing and replacing fixtures not secured by rivets, but necessarily removed in order to repair or renew adjacent defective parts, should be in addition to the rivet basis; rules covering wood-car repairs to govern. Paint applied, one-quarter-hour labor to be allowed per pound of paint applied and on the basis of Rule 105.

The report is signed by F. H. Clark (C. B. & Q.), chairman; G. E. Carson (N. Y. C. & H. R.), C. F. Thiele (P. C. C. & St. L.), Ira Everett (L. V.), B. Julien (U. P.), S. T. Park (C. & E. I.) and T. M. Ramsdell (C. & O.)

The report was approved and the recommendations of the committee were referred to letter ballot

Train Lighting.

The committee sent out a circular of inquiry asking for recommendations as to any changes, additions or corrections in the recommended practice on train lighting and any other points which the members desired the committee to take action on. It received quite a number of replis to this inquiry and changd its suggestions as to recommended practices given in the report of 1910 to read as follows:

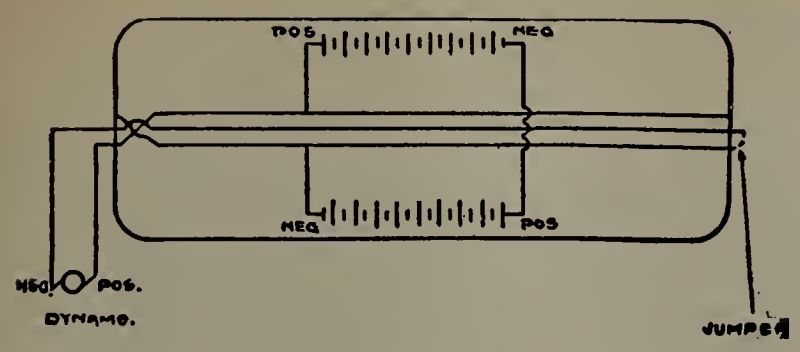

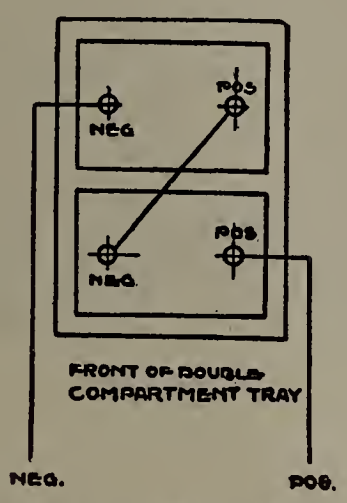

Fig. 1.—Connection of Battery to Train Line. Fig. 2.—Arrangement of Terminals.

1. That each electrically lighted car be provided with a notice giving the following information that this notice shall be posted in the electric locker.
Type of Generator.
Type of Regulator.
Type of Lamps.
Voltage of System.
Voltage of Lamps.
Number of cells of storage battery.
Normal charging rate (at charging receptacle).
Size of train wires, No. —— B. & S. Gauge.
Number of train wires (2 or 3).
Capacity in amperes of generator.
Setting of axle generator.
Current output—amp.
Automatic switch—volts.
Zero charge relay—volts.
Lamp regulator—volts.
Amperes—full light.
Diameter of axle pulley. (Outside.)
Diameter of axle bushing. (Outside.)
Diameter of axle bushing. (Inside.)
Diameter of generator pulley. (Outside.)
Diagram of connections showing location, type and ampere capacity of fuses.

2. That where main line connectors are used, Gibbs' No. 3-G train line connector be used, with connections to the battery, dynamo and jumper as shown on Fig. 1. If only two wires are used they shall be connected to the two outside terminals and the female connector on each end of car shall be stenciled "Not for use on head-end system."

3. That batteries shall be connected up with the positive to the right, facing the car, as shown on Fig. 1.

4. That where double compartment tanks are used, the connections and arrangement of battery terminals are to be shown on Fig. 2.

5. That each electrically lighted car shall be provided with two charging receptacles with swivel supports installed one on each side of the car, the outside angular ring to be the positive.

6. That each electrically lighted car be provided with two 150-ampere fuses, close-connected to each battery terminal; the fuses to be arranged and placed in a cast-iron box.

7. That each electrically lighted car shall be provided, on the switchboard in the car, with a switch, a fused switch, fuses or terminals. The switches, fuses or terminals to protect and completely disconnect the following parts: Train line (where train line is used), battery, axle dynamo (where axle dynamo is used. The axle dynamo switch or fuses to control the positive, negative and field of the dynamo). Each of the above switches, fuses or terminals is to be plainly stenciled, designating the part controlled, the positive terminal to be on the right side facing board.

8. Where a main lamp switch is used or where fuses controlling all lamps are used, they shall be so stenciled in plain letters.

9. That all fuses on cars shall be National Electric Code fuses.

10. That where axle dynamos are used, negative, positive and dynamo field shall be fused as close as possible to the dynamo and prior to the leads either entering the conduits or being secured to the bottom of the car. The above fuses to be used for emergency service only and are to be at least one hundred per cent. above the capacity of the fuses on the switchboards protecting the same leads.

11. The following voltages should be used:
60 volts (nominal) for straight storage, head end and axle dynamo systems.
30 volts (nominal) for straight storage and axle dynamo system.

12. That the batteries shall be perfectly installed in double compartment tanks.

13. That battery boxes shall have a vent provided in each door.

14. That when facing the end of the truck on which axle generator is mounted, the pulley or sprocket shall be on the right-hand side.

15. That the rules of fire underwriters shall cover all car wiring.

16. That all wiring under car to the switchboard shall be run in conduits.

17. That a straight pulley seat be provided for the axle pulley. That if a bushing or sleeve be used it must be secured to the axle independent of the pulley. Bushing to have an external diameter of 7½ in. and to be 8½ in. long, turned straight. That the pulley hub have a uniform internal diameter of 7½ in., the length of the hub to be 6½ in., the face of the pulley to be 9 in. or wider if flangeless, and 8 in. if flanged. That the generator pulley be flanged, crowned and perforated, and have an 8-in. face.

The following changes have been made in the 1910 exhibits to conform to the recommendations of 1911:

Exhibits E and F have been changed so that the fuse box will accommodate an N. E. C. fuse. On the floor plan in Exhibit E the fuse box has been changed to a location along the end of the battery box.

Exhibit H has been changed to show the Gold positive plate the same dimensions as the Willard positive plate.

Exhibit H has been changed in that the length of the negative bridge has been changed from 10 3/16 in. to 9¾ in., also added on Exhibit H recommended dimensions for the National battery.

On Exhibit I, the detail of chest handle, a lip has been added at the top and projects into the wood tank.

Exhibit H has been changed in that the crown of the lead line is specified as three to four per cent. antimony lead instead of pure lead.

On Exhibit G the method of applying lead lining has been changed to read as follows: "Size lead tank with one coat of chrysolite, then with pretrolite and then insert in wooden tank which has been filled to a depth of 2 in. with a mixture of paraffin and pretrolite, having the melting point 150 deg. F.

On Exhibit G the abbreviation S. B., indicating Single Braid wire for cross section, omitted; unbraided wire to be used.

Item 31 on Exhibit G covering No. 6 flexible rubber-covered wire changed to show solid wire.

Exhibit K has been changed to show recommended design of vent for battery door.

In connection with Master Car Builder's Rules covering interchange of equipment, your committee suggests that the paragraph at the bottom of page 103 reading:

"On electrically lighted cars a battery depreciation charge of 75 cents per day shall be made," changed to read as follows:

"On electrically lighted cars, furnished to foreign roads, where no agreement is made, the following charge shall be made per day for use of batteries:

	Depreciation.	Current.	Total.
32 cells	.....46 cents	29 cents	75 cents
16 cells	.....23 cents	14 cents	37 cents

The report is signed by:—T. R. Cook (Penn.), chairman; E. A. Benson (Pullman), Carl Brandt (L. S. & M. S.), Ward Barnum (L. & N.), and J. H. Davis (B. & O.).

Train Pipe and Connections for Steam Heat.

The committee recommended that the following Recommended Practice be adopted as Standards: Two-inch train pipe; end valves with not less than 1½-in. openings, and location of steam, air and signal pipe as shown in the accompanying illustration. The location of pipes is changed to show the dimensions taken from the center line of the car instead of the center line of the coupler shank. The committee finding but few railways using a hose larger than 1½ in., recommends that the present Recommended Practice of 1⅝ in. hose be changed to 1½ in. It also recommended for adoption as Recommended Practice the following: Hose nipples of dimensions shown in the accompanying illustration; steam hose to be 5-ply, 1½ in. inside diameter and 25 in. long; hose clamps to the dimensions as shown in the accompanying illustration; each end of hose to be fitted with a nipple, and the coupler to have not less than 1½-in. opening. The horizontal elevations of nipple to opening through this coupler to be minimum, 15 deg.; maximum, 20 deg. The coupler to be tapped with 1½-in. pipe thread.

It is further recommended that manufacturers of steam hose couplers be asked to appoint a committee to act jointly with a committee of this association and to report at the next convention on the contour lines of a coupler that will be interchangeable.

The report is signed by:—I. S. Downing (L. S. & M. S.), chairman; H. E. Passmore (T. & O. C.), T. H. Russum (B. & O.), J. J. Ewing (C. & O.) and C. A. Schroyer (C. & N. W.).

Mr. Downing presented the report and in connection therewith said:

The recommendations concerning the train line, end valves and pipe locations have been recommended practice since 1903, and we are inclined to feel that they should be advanced to standard. In connection with the steam hose couplers, there is but very little difference in the large couplings—about 3/16 in. on the locking arm—and we feel that the coupler manufacturers, if they work

with the committee—we would get a coupler that would be interchangeable.

Concluding Exercises.

The secretary stated that the auditing committee had examined the accounts of the secretary and treasurer of the association, including the vouchers, and had found them correct.

The committee wishes to acknowledge the appreciation of the association to the President, for his very able address and ability with which he presided; to the other officers for their good work in handling the details; to the committees that have considered and reported on the subjects assigned to them and for the thorough manner in which their work has been performed; to the committee on arrangements for effective service in attending to the comfort and pleasure of those attending; to the railways and the Pullman Company for courtesies extended. To the Railway Supply Manufacturers' Association for its magnificent exhibition of railway supplies that have become so important a feature of these conventions and the entertainment provided by that Association. To the press in general for their co-operation and interest.

On motion, the report of the committee was adopted.

D. F. Crawford (Penn.): We have tried the present method of elections for two years and it seems to me it is unnecessarily cumbersome. I therefore move that the executive committee be authorized to appoint a committee, with a view of simplifying them, and to transmit a circular report to the members by December 1, which covers the six months' period required, and report their recommendations at the next meeting. (The motion was seconded and carried.)

The President: I suppose some of you have noticed that you did not receive reports. I would say that the executive committee has been for years urging chairmen of various committees from time to time to be prompt in presenting their reports so that the matters might receive careful consideration by all concerned. It seems that this year the reports were more delayed than ever before. Indeed, some reports were not here until a day or so before the opening of the convention. I think this is a matter to be regretted.

D. F. Crawford (Penn.): Mr. President, I would suggest that you call the attention of the members to the provision of the By-Laws in respect to reports.

C. A. Seley (C. R. I. & P.): It occurs to me that it would be advisable for this association to invite railway officials to visit our conventions and see the magnificent exposition of railway appliances. There is no question but that we have on this pier a most complete exposition of railway appliances, and it is an exhibit that would be of very great value to every railway official from the president down. It is true that the exhibit is seen by quite a number of purchasing agents, but I do not think it is viewed generally by the executive officers. The value of this association to the railways is undoubted in many quarters, but there are some railways, I understand, that do not extend to their men the opportunity of attending these conventions. Now, I believe we should make an effort in this respect and therefore I make a motion that the executive committee of this association extend to the executive committee of the American Railway Association a cordial invitation for them to individually visit our next convention, wherever it may be held, and suggest the advisability of their appointing a committee to visit the convention and report back to their association.

(The motion was carried.)

O. C. Cromwell (B. & O.): Referring to the delay in getting out reports, I would say that the committees would be greatly assisted if the membership of the association would reply promptly to the circulars. I think a great deal of the delay in getting out the reports is due to that fact. I am sorry to say that a great many reports are meager that are sent in to the executive committee. Hence, it leaves the committee a great deal of work to do in comparativly short period of time. If the members will bear this in mind it will facilitate the getting out of reports very much.

J. J. Tatum (B. & O.): Mr. Cromwell criticizes the railways. Now I think I will take the other side and criticize the committees. If a committee waits until the eleventh hour to get out circulars seeking the information that it wants, why, naturally there is going to be delay. I happened to be on one of the committees that did not have a meeting this past year; I don't know why, but I know that a typewritten report from the committee was here. I don't know how it happened to be made. I think if committees would get busy right away after they leave the convention and decide on what they want and promptly send out circulars to the railways asking for the information that they need, it will greatly facilitate the getting out of these reports.

C. D. Young (Penn.): I would suggest that the executive committee can help the committees quite considerably. The executive committee usually does not meet until August or September, and then it appoints the committees for the next year, and by the time those committees have gotten together the information and printed the same it is December or perhaps January of the next year. The replies to the circular sent out are hard to get at best, and the members of the committee have hardly much over 30 days or 60 days at the outside, and a great many of the replies require investigation, and when you get the replies in they have to be boiled down and condensed, all of which takes time. I think it would materially assist the association if the committees could be appointed earlier, and then when they are appointed instructions issued to the chairman of the various committees to call the members together promptly.

E. W. Pratt (C. & N. W.): I would suggest that it would be helpful to all members if, in addition to notifying each committee independently, there was a list of all the committee, with their various chairmen, and this list sent out to the members as early as possible, stating the subjects to be considered, and also if there are any detailed instructions to be given to the committees as to getting up their reports, a brief outline of them should be given. The thought in my mind is that in that way many of us would look out for information early in the year, and it might be that somebody would offer information without waiting to be requested for it by a committee.

C. A. Seley (C. R. I. & P.): I move that the appointment of the committees be issued by the secretary in circular form to all members.

(The motion was carried.)

R. L. Kleine (Penn.): In connection with the work of the committee on standards, I desire to say that when a circular is sent out we get a great many replies upon the subject matter that refers directly to the work of other committees, and I would suggest that members bear in mind that we have other committees on those particular subjects. That, I think, will obviate some of the delay. If members would refer those subjects, where there is either a standing committee or a special committee on the particular subject, directly to those committees or empower the committee on standards to do so, it will expedite the work of the association a great deal.

The following officers were elected: President, A. Stewart, Southern; first vice-president, D. F. Crawford, Pennsylvania; second vice-president, C. E. Fuller, Union Pacific; third vice-president, M. K. Barnum, Illinois Central; treasurer, J. S. Lentz, Lehigh Valley. Executive Committee—F. W. Brazier (N. Y. C. & H. R.), C. A. Schroyer (C. & N. W.) and A. Kearney (N. & W.).

President Curtis was presented with the ex-president's badge and the meeting adjourned.

Among The Manufacturers

UNITED STATES LIGHT & HEATING CO.

The United States Light and Heating Co. of Maine is a prominent manufacturer of axle electric car lighting apparatus. This company is two and a half years old and is a consolidation of The United States Light & Heating Co., of New Jersey, which manufactured the Moskowitz system of axle electric car lighting equipment, the Bliss Electric Car Lighting Co., which made the Bliss system of axle equipment, and the National Battery Co., makers of the "National" storage battery.

An axle electric car lighting equipment operates in conjunction with a storage battery and the logical course, when the original manufacturing facilities became inadequate, was to build one comprehensive plant for the manufacture of the entire output of the company.

Inasmuch as the entire product of this company, including storage batteries for every purpose to which a storage battery may apply, is built from the raw materials, assembled and tested under one roof, it will be seen that the projected plant presented an opportunity for the application of advanced principles in the way of arrangement of departments and processes.

The design of the plant was turned over to plant engineering specialists with instructions to plan for high manufacturing efficiency. The principle is perfectly patent that efficient and economical manufacture operates to the mutual advantage of producer and consumer. The present day theory is to use the best appropriate materials that money can buy and to accomplish the manufacture of the product with the minimum of handling and useless conveyance, the expense of which contributes nothing to the quality of the product.

Niagara Falls was selected as the site for the new plant as offering the advantages of electric power and splendid shipping facilities. A plot of twenty-one acres of land was purchased so that no limitations could be placed upon the design of the plant because of cramped space.

The arrangement of the plant is quadrangular. The first floor of building A is reserved for stores, the north end being devoted to battery stores, while the south end is used for axle equipment stores. The receiving track is adjacent

U. S. Light and Heating Co.'s Niagara Falls Plant.

to the south end of building A, so that all the raw materials, such as rough castings and the like, can be removed directly from the railroad cars to the stores department. Stores are classified as "rough" and "finished" and include not only rough castings and the like, but also the individual parts upon which all the operations have been completed. It will be understood in this connection that the assembling is done entirely from stores.

Routeing of Axle Equipment Manufacture.

The progress of axle equipment manufacture is from the stores department, eastward to the shipping department, the floor of which is on the same level as that of the car deck so that the shipments of equipment may be handled with the utmost ease.

The last department that the equipments pass through before they reach the shipping department is the testing department. Here the complete equipments are set up for a thorough try out under conditions which are made fully as exacting as could ever obtain in an actual railroad installation. The regulating panels are mounted on racks equipped with all the necessary meters for studying the behavior of the apparatus. Lamp banks are arranged to secure variable loads and motor speed controllers are conveniently placed in the rack so that the stationary motors may be run at any speed whatever and thus be made to drive the axle generators at varying speeds. The test includes a four hour heating run. A serial number is given to each regulating panel and to each generator. Complete records of the performance of each apparatus are kept on file. Should any machine fail to meet the specifications, it is returned to the assembling department where it is overhauled and the defects corrected.

Routeing of Battery Manufacture.

The "National" storage battery is made in various types for every purpose to which a storage battery is applicable. There are two general processes of plate manufacture, the "Plante" and the "Pasted." Since the Plante process alone is used for car lighting batteries, we shall confine ourselves to the routeing of this process.

At the west end of building F, the lead pigs are rolled into lead sheets. These sheets then pass through punching machines which punch out the blanks, which latter have the general contour of the finished plates. The blanks then pass through automatic machines which raise the leaves in relief from the surface of the blank by means of a pressure which is at all times normal to the surface.

The plates have now reached the end of the mechanical stage of the process. They travel on the industrial railway to Building H where the electro-chemical formation of "active material" is accomplished. The plates then pass to building J where what might be called the refinement of the "forming process" is carried out. The next stage is in building D where the plates are "lead burned" into groups of positives and negatives.

The plate groups are now assembled in a preliminary manner as batteries in tanks with electrolyte and are carried on the industrial railway into building E where the "developing charge" is applied.

The batteries now return to building D and the "Finished Assembling" is completed, that is, all the fittings necessary to make the batteries ready for service are placed in position. The batteries now move directly to the shipping department.

A large quantity of electric current is used in the forming and developing departments and to control the various circuits a completely appointed switchboard is provided on the second floor of building D. Here also is the chemical laboratory excellently appointed to carry on the comprehensive analysis of materials which is absolutely necessary in battery manufacture.

Power House.

This is a transformer station housing six 275 kilowatt 11,000 to 220 volt transformers. Two duplicate rotary converters are installed, each capable of supplying 3,000 amperes at 250

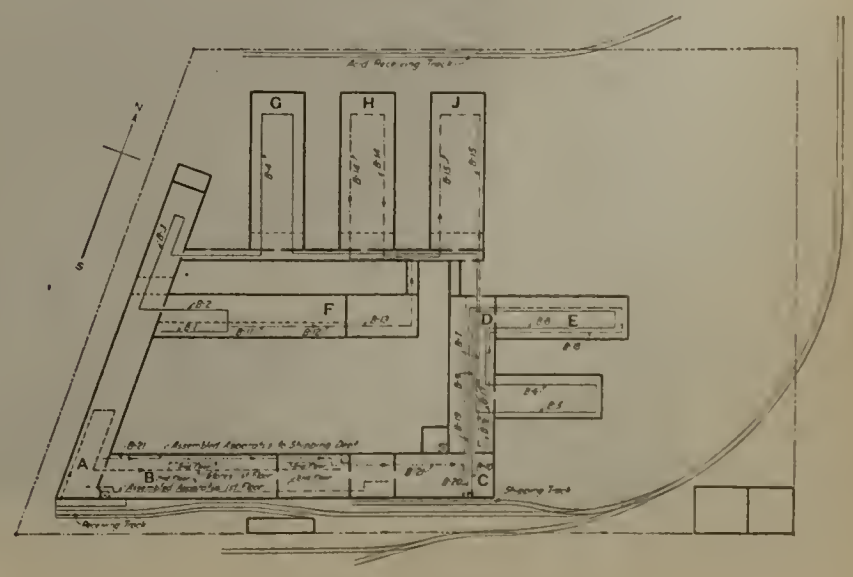

Layout of Plant.

volts direct current which is carried to the plant proper over a three wire circuit. This permits using two distinct voltages in the plant. Since the preponderating proportion of the power is used in the forming departments and must be direct current, it was decided to convert the entire supply rather than to attempt to have part of the current alternating for the sake of the motors. Motor drive is used throughout the plant.

Heating System.

To supplement the cleanliness incident ot the use of electrical power, an oil burning heating system was installed. Thus smoke and ashes are avoided.

Trackage.

So much acid is used at this plant that a separate acid receiving track was installed on the north side of the plant. The shipping and receiving tracks merge into one track near the power house at the south east corner of the property. A continuous narrow gauge industrial railway runs throughout the plant, through all departments and between departments. This is supplemented at convenient points by chain hoists depending from overhead trolleys. The weight of no piece in the entire manufacturing process is sufficient to warrant the use of power cranes. The devices mentioned are arranged to accomplish conveyance with the utmost ease and dispatch.

Machinery.

While the machine shop extends over considerable area and houses a large complement of machines, it has been the policy of this company to adapt standard machine tools. A comprehensive system of jigs and gauges is built and maintained in the excellent tool room and used in conjunction with standard machines gives every result that could possibly be desired or obtained by means of special machines and at the same time effects a considerable economy. The jigs and gauges mentioned are utilized to the highest degree to secure an absolute interchangeability of parts.

TATE FLEXIBLE STAYBOLT.

The Tate flexible staybolt has made sufficient progress in the last six years to demonstrate the possibilities of a flexible or adjustable staybolt for locomotive firebox use. It is difficult to realize the amount of energy expended and vigilant work exercised by the organization of the Flannery Bolt Company for the purpose of demonstrating conclusively that flexible staybolts were necessary to the more economic maintenance of the locomotive firebox than the rigid stay, inasmuch the measure as a whole was revolutionary and directly opposed to the methods in vogue, when first the Tate flexible staybolt was exploited.

The method of rigidly staying the firebox was deeply established in the mechanical minds as the right way, notwithstanding constant and ever-recurring trouble due to continual renewals of broken staybolts, cracked fire sheets and shopping of engines, etc. Progress with the Tate bolt in the introductory period was accordingly limited, but the use of it gradually advanced in proportion to the amount of service rendered compared to the rigid staybolt.

The Tate flexible staybolt has had to prove its value step by step in firebox practice under all conditions of service operation, from the basis of six bolts to an engine applied in rigid localities, to a complete installation when such could be made. In almost all cases the results were so satisfactory that it led to a far greater use, and at the present time it is said that over two hundred railways have the Tate bolt in service, a large number of which recognize that it is a necessary and most vital factor in solving the staybolt and firebox problems of the past.

Much has been accomplished by the use of the Tate flexible staybolt during this period in demonstrating beyond doubt that flexible connections to the firebox assemblage are essential to the economic working and maintenance of the locomotive boiler as a whole, and that the flexible staybolt properly adjusted and applied in regions of firebox construction where expansion is the greatest, to compensate for the difference of expansion between outer plate and firebox sheets, renders a condition more satisfactory as to safety and economy in the methods of construction than with the rigid stay. The outer shell of boiler and firebox sheets in their relative course of expansion assume the natural position under working conditions with less liability of distortion, bending and buckling, as when rigidly stayed, and in consequence, flue and seam leakage has largely been overcome, staybolt breakage largely, if not entirely eliminated, and fire sheets remain in good condition free from crack, subject only to the disintegrating influences of bad water, and the effects of overheating, resulting therefrom.

Rigidity of firebox construction is unquestionably the main source of injury to the material make-up of the locomotive boiler. The difference in the amount of expansion between the outer shell and firebox plates has heretofore been largely if not entirely ignored, and all connecting parts such as staybolts, braces, etc., holding the complete assemblage rigid, are subjected to the added stress incidental to the difference of sheet expansion when all parts are heated in the per-

Installation of Tate Flexible Staybolts.

formance of the boiler under operation. Fatigue, fracture, rupture and breakage among the rigid connections is the inevitable outcome, rendering the whole proposition unmechanical, insecure and costly to maintain.

The Tate flexible staybolt is made of three parts and is easy to install and inspect; it affords a clear water space; it can be longitudinally adjusted to meet the difference of outer shell expansion over firebox sheets; and in its general construction of parts is first class in every particular as regards quality of material and workmanship.

The Flannery Bolt Company, Pittsburgh, Pa., manufacturers of the Tate flexible staybolt, has added to its shop facilities in view of the increasing demand for the Tate staybolt, and feels assured that the general tendency is to provide flexible connection to locomotive firebox construction, owing to the past service showing of the Tate bolt, which has proven so advantageous over the rigid stay. The question of complete flexible staybolt installations is one that is being largely considered in order to render ideal conditions in the method of firebox staying, and render the locomotive more serviceable as an earning power with less cost for maintenance.

The general offices of the Flannery Bolt Company are in the Frick building, Pittsburgh, Pa., with factory at Bridgeville, Pa. James J. Flannery is president; Jas. C. Gray, vice-president; Joseph M. Flannery, secretary; H. A. Neeb, treasurer; B. E. D. Stafford, general manager; F. K. Landgraf, shop superintendent and mechanical engineer. J. Rogers Flannery & Company have the exclusive sales agency for Tate flexible staybolts, with offices in the Frick building, Pittsburgh, Pa., represented by J. Rogers Flannery, president; B. E. D. Stafford, vice-president; Geo. E. Howard, eastern territory; Wm. M. Wilson, western territory; Thos. J. Leahey and Barton H. Grundy (Commonwealth Supply Company of Richmond), southeastern territory, and Tom R. Davis, mechanical expert.

NEW CAR SILL DRESSER.

The J. A. Fay & Egan Co., at its plant in Cincinnati, has recently produced a new car sill dresser which is illustrated and described herewith. This machine is series No. 290 and is built somewhat along the lines of the Fay & Egan No. 1, which has for many years been the standard car sill dresser.

The new machine will dress four sides of timbers as thick as 17 inches by 14 inches at one operation. It will also handle material as small as ¾ inches thick and 3 inches wide. It is one of those machines which are practically indispensable in the railway car shop. It is built for and will stand rough kinds of use day after day without going to pieces.

To make this machine measure up to the modern efficiency standards it is equipped with a feed that is very fast for the heavy work done. The control levers and adjustments have all been arranged to be within easy reach of the operator at the feed-in end of the machine. All adjustments can be made from the outside of the machine, saving much valuable time to the operator.

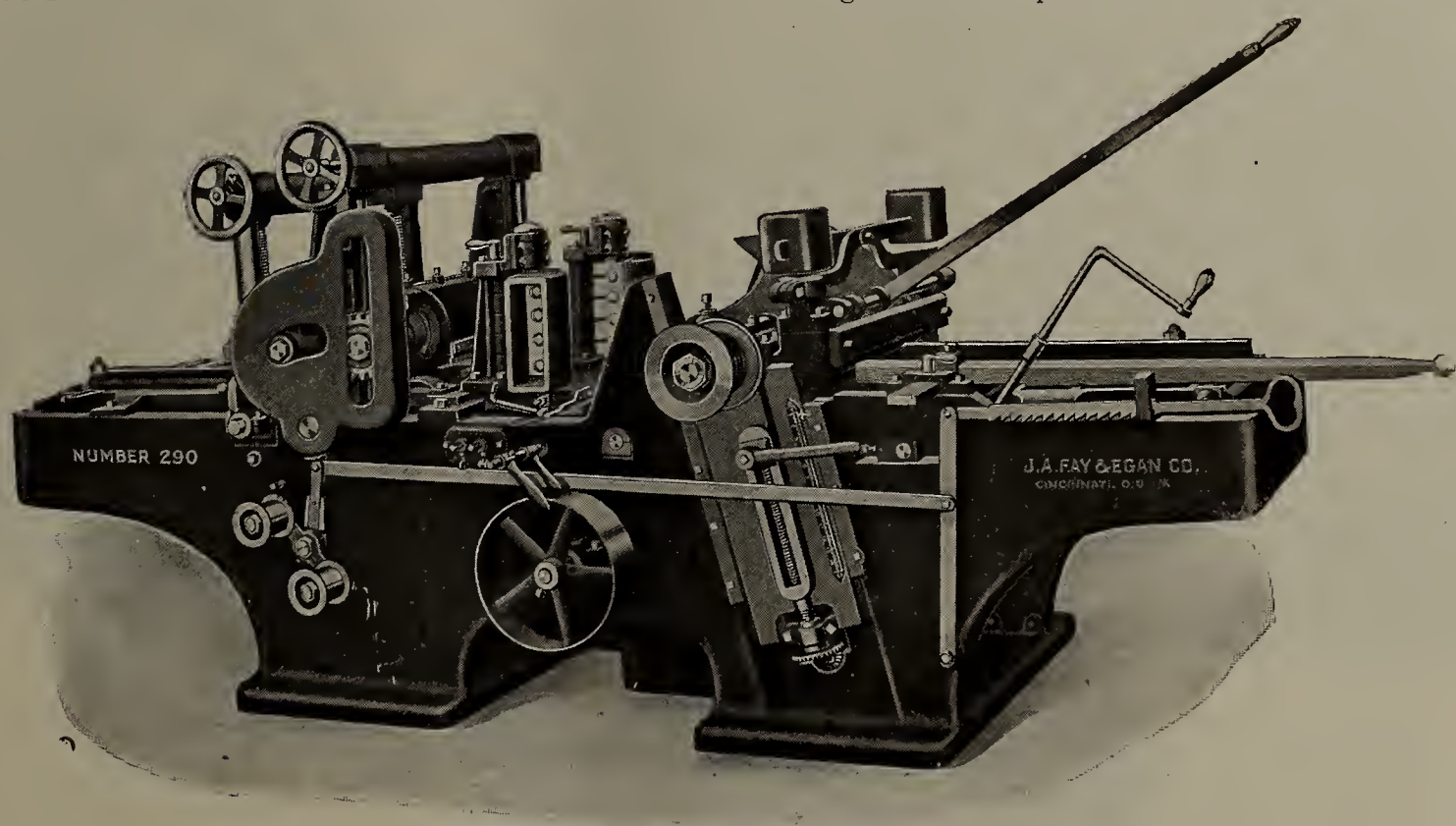

Fay & Egan Car Sill Sizer.

NEW LOCK NUT.

A new lock nut has been given the trade name "Boss Nut" and placed on the market by the Boss Nut Company. This nut is a natural thread lock nut for use on cars, track, frogs, crossing or anywhere that a simple, positive, vibration proof, locking device is required.

The nut is made of special mild steel and is double concave in shape; goes on either way and may be run on a bolt with the fingers like any ordinary nut. This feature means a great saving in time. When brought square with the home nut, the boss nut bears on the two outer edges only and as the nut is wrenched tight, the inner arch of the boss nut is flattened, causing the outer surface to draw downward and inward until the threads of the nut are sunk so deeply and tightly into the valley of the threads of the bolt that no amount of jar or vibration will cause it to loosen its grip.

One feature should commend the use of the Boss nut to railways and that is, owing to the principle on which the Boss nut is constructed, it automatically takes up variation in bolts due to defective manufacture, wear, etc. The Boss nut should also appeal to railways on the grounds of economy, as it may be used repeatedly, does not destroy threads of bolts, is labor saving and does not require the service of an expert mechanic to apply it, for the tighter you wrench the Boss nut, the tighter you lock it.

EXHIBIT OF THE INDEPENDENT PNEUMATIC TOOL COMPANY.

Independent Pneumatic Tool Company, Chicago, manufacturers of the Thor air tools, exhibited at the mechanical conventions a complete line of piston air drills, reversible flue rolling, reaming, tapping and wood-boring machines, pneumatic

grinding machines, close-corner drills, staybolt drivers, one-piece pneumatic long stroke riveting hammers, chipping, calking and flue beading hammers. Mr. James B. Brady, president, and Mr. W. O. Jacquette, first vice-president, were in daily attendance at the convention. Mr. John D. Hurley, second vice-president, was in direct charge of the Thor exhibit and was assisted by Messrs. R. T. Scott, R. S. Cooper, J. P. Bourke, Geo. A. Gallinger, W. R. Gummere, T. J. Carroll, H. F. Finney, G. C. Wilson, V. W. Robinson, R. Maplesdon, F. H. Charbono and Walter A. Johnson.

The No. 20 Thor drill, which is a recent addition to the Thor line, having been designed especially for staybolt work, attracted considerable attention. This machine has compound gears, and has become exceedingly popular among railroad users for the class of work mentioned.

The Thor exhibit was undoubtedly the largest and most successful of any of the previous exhibitions of this company.

AMERICAN RADIAL DRILL AND PLANER.

The machines herewith described are built by the American Tool Works Co., Cincinnati, Ohio, builders of lathes, planers, shapers and radial drills, and are designed along the most modern lines.

The "American" multi-speed planer has been designed to supply the constantly increasing demand for a metal planing machine providing two or more cutting speeds. This type of planer is nothing more or less than the regular "American" planer supplied with a patented four step cone speed variator. This variator is mounted on a substantial platform on top of the housings and provides four cutting speeds and a constant return.

This mechanism is extremely simple, having but two cones and an endless belt involved in its actual operation. The belt is shifted from one step to another one, changing speed while the countershaft is running at a higher rate of speed. In fact, all four changes may be made in less than one minute, and the faster the belt is running the easier it will shift. The shifting of the belt is accomplished by means of a hand wheel and belt tension lever. When changing speed it is simply necessary to slacken the belt by loosening the tension lever and by one revolution of the hand wheel the belt is shifted from one step to the next, requiring but a few seconds' time to make the change.

The range of speed provided is in a ratio of 2 to 1, that is, for speeds from 25 to 50 ft. or in the same ratio for speeds from 30 to 60, or at whatever speed that is suitable for the work to be done.

The cone speed variator furnished on "American" planers eliminates all troublesome devices, such as gears, frictions, jaw clutches, etc., and insures much longer life and higher efficiency under all conditions. It is also noiseless and free from vibration. There is nothing to require unusual attention, as the bearings are bronze bushed and of the dynamo ring oiling type, consequently require only an occasional oiling.

The accompanying illustration gives a clear idea as to the construction of the variator and its method of application to the planer.

The "American" full universal radial drill represents a radical departure in the design of full universal radials. Space does not permit of a thorough description of the entire machine and, therefore, in the following will be described only the principal features of this design.

In the past the one great fault of full universal radials was the spring of the arm, which was entirely too weakly constructed, to withstand the strains placed upon it, and consequently only a comparatively light class of work could be handled. The arm of the "American" radial is made in the form of an upper and lower tube section, firmly joined together in the back their entire length by a double wall of metal and further reinforced by heavy transverse ribbing. The saddle has large bearings on the ways and means have been provided for firmly clamping the same at any point along the arm within the range of the

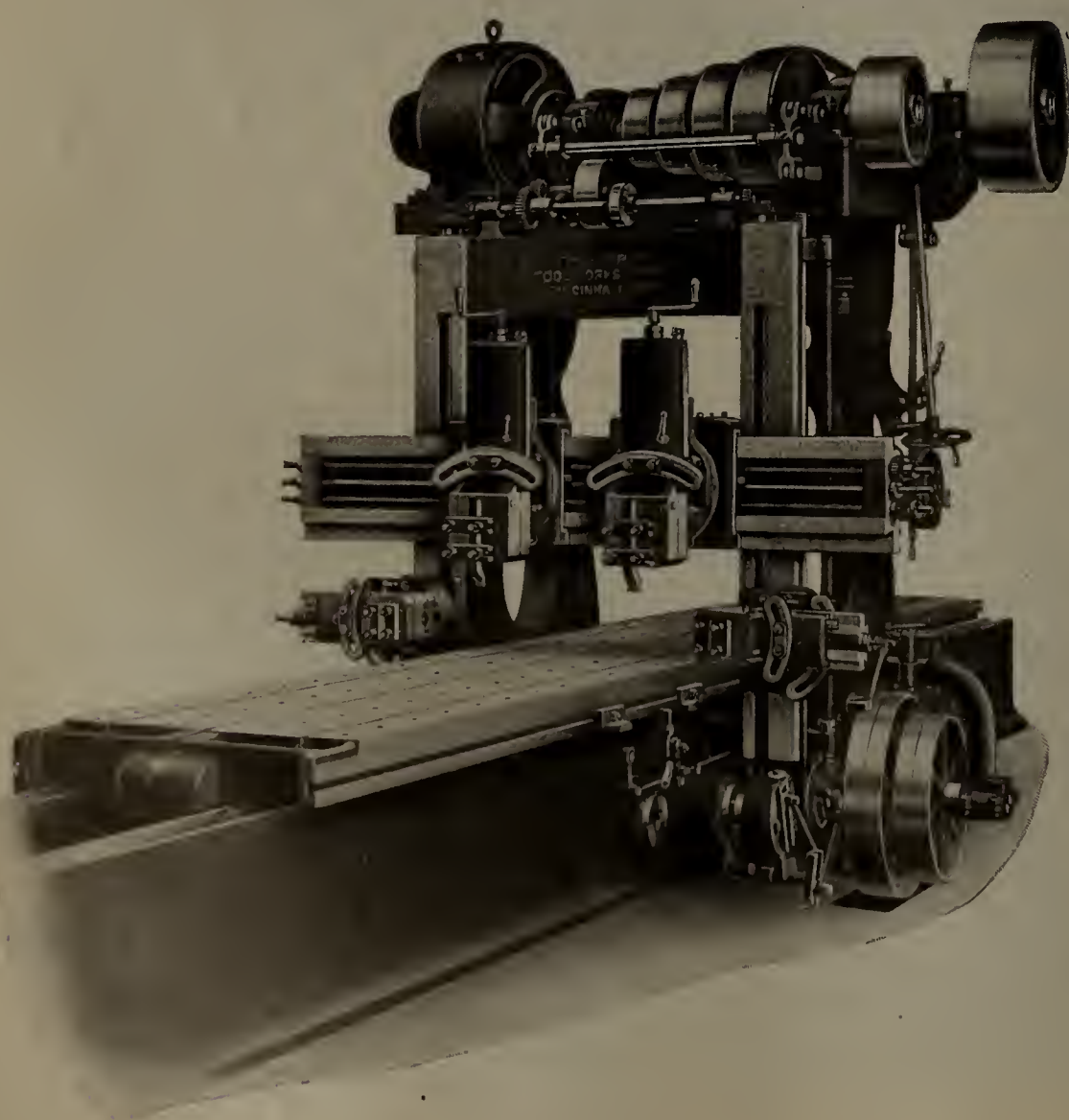

American Multi-Speed Planer.

H. W. Schatz, Mech. Engr., Amer. Tool Works Co.

J. B. Doan, V. P. & G. M., Amer. Tool Works Co., of Cincinnati.

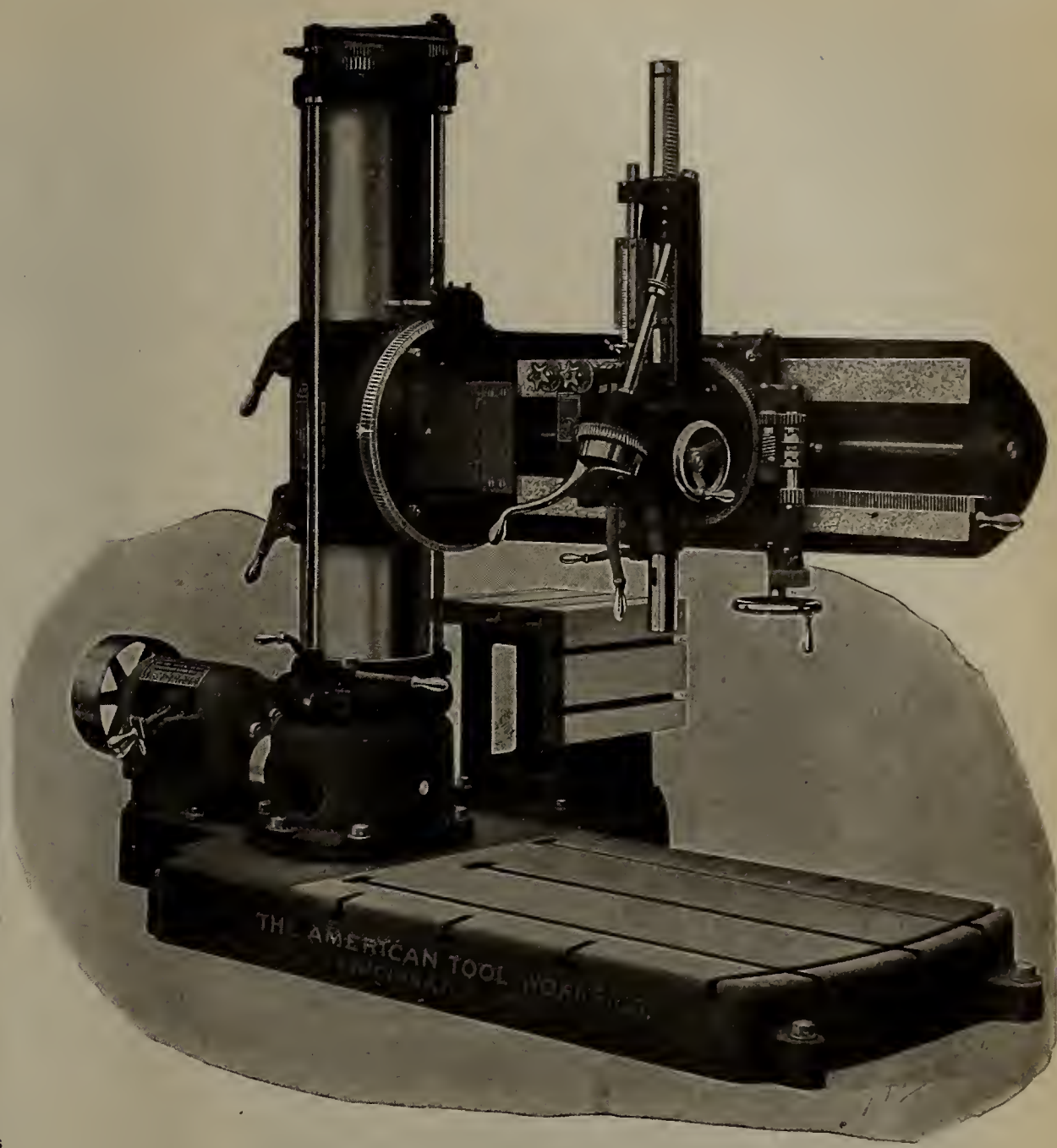

"American" Full Universal Radial Drill.

drill, thus firmly binding the saddle and the upper and lower tube sections unto a compact unit, with which construction all strains are distributed equally to all points of the arm.

Another interesting feature of this machine is the triple geared head which contains all steel gears, with the exception of the spindle gear which is made from a high grade phosphor bronze. The triple gear mechanism affords when driving, one reduced and one double reduced speed, which in connection with the eight speeds obtained through the eight change speed boxes, provides 24 spindle speeds, covering a carefully chosen range.

Another point of design which can be found only in the "American" universal is that the tapping attachment mechanism is located at the arm girdle instead of being incorporated in the saddle mechanism as on practically all other designs. This not only permits the use of more liberal proportions in the head and saddle, but also permits an increase in the proportions of the tapping attachment members and at the same time provides easy access to the same should adjustment of any kind be required.

An auxiliary drive has been provided for the purpose of rotating the cone gears while speed changes are being made. This drive operates through a friction which is automatically engaged and disengaged by the raising and lowering of the tumbler lever. A notched plate located in the back of the box prevents the gears from being improperly meshed, and also makes impossible the shifting of the tumbler lever without first engaging the auxiliary drive.

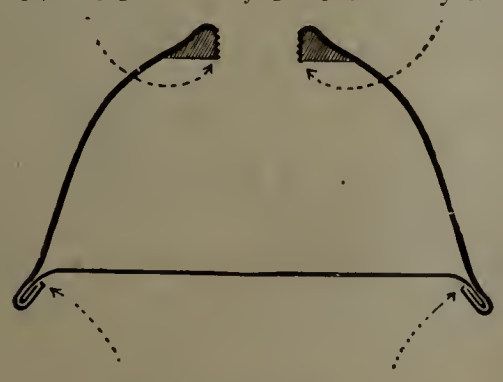

Patent applied for.
Detail of Eagle Oiler.

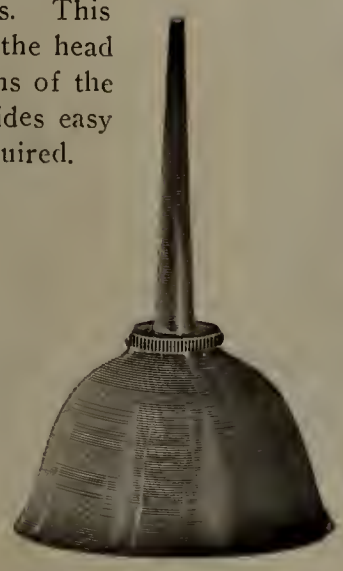

Eagle Solid Steel Oiler.

J. L. Fusner, Gen'l Sales Mgr., Eagle Glass & Mfg. Co., Wellsburg, W. Va.

SOLID STEEL OILERS.

The illustrations show an oiler made especially for railway service by the Eagle Glass & Mfg. Co., Wellsburg, W. Va. It is somewhat unique in design in that it is a one piece oiler.

Referring to the drawing, the arrows at the top point to the neck of the oiler which is formed by turning the top of the body down into it and threading. This is then backed up or reinforced by a composition metal, thereby dispensing with soldering or brazing a separate collar to the body. This is a distinctive feature of this oiler. The bottom arrows indicate the point at which the bottom is welded to the body, thus making it an entirely one piece article, without seams or joints.

VICTOR NUT FACING MACHINES.

The Victor Tool Company, of Waynesboro, Pa., is a specialist in the manufacture of nut facing and bolt shaving machines.

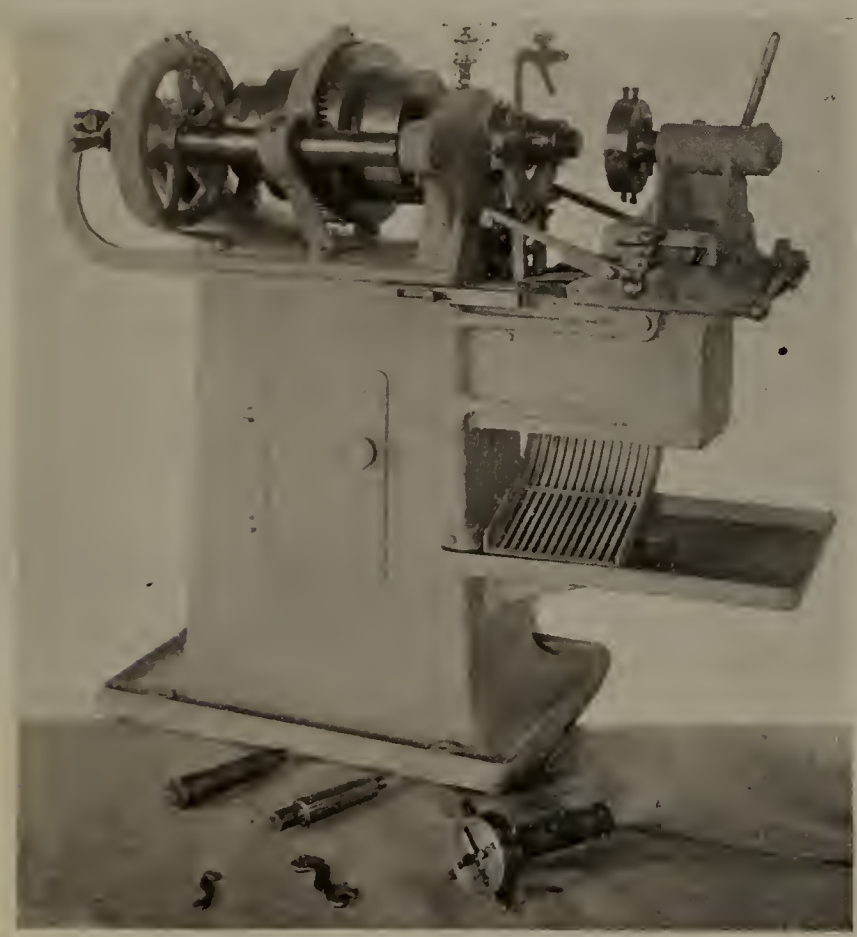

Victor Nut Facing Machine.

Nut facing machines Nos. 1, 2 and 3 though similar in general design vary in the size and variety of work which they turn out. No. 1 is equipped with countershaft and mandrel and facer nuts varying from ¼ to 1½ ins.

The nut is placed on the mandrel by hand and the facer head moved forward by means of the handle. When the nut is faced the motion of the machine is reversed and the nut released by the backward movement of the handle. This reverse movement of the spindle by the forward and backward movement of the handle is not found in any other machine.

The capacity of the machine is from 10 to 15 nuts per minute, and they are correct and true to the thread.

This machine can be adapted to a variety of uses other than nut facings and quite a number of them are used in factories or plants manufacturing plumbing goods and similar lines.

The No. 2 Victor nut facing machine shown in the illustration has considerable more power than the No. 1 by reason of its back gear and has a wider range, facing nuts up from ¼ in. to 3 ins. It, of course, does not face large nuts as rapidly as the smaller ones. The machine is equipped with countershaft both shaving and pointing attachment and one mandrel.

The No. 3 machine will do all that No. 2 machine will do, and much more. It will not only face nuts from ¼ in. to 3 ins. but by means of the turret attachment will do a great amount

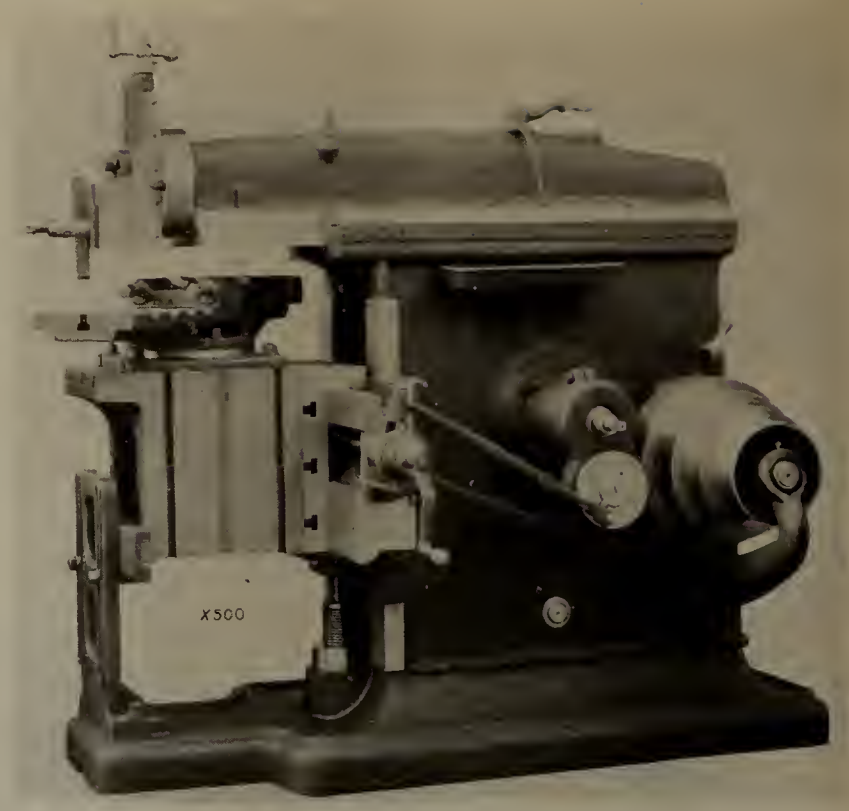

Queen City Crank Shaper.

of boring, turning, facing and tapping, thus avoiding the necessity of allowing the machine to stand idle when a sufficient amount of one kind of work is done. Its work in this respect enables it to take the place of a much larger and more expensive piece of machinery. The reverse movement in this No. 3 machine is managed by means of a treadle.

Extra mandrels are furnished as desired for the various sizes of nuts and for the different machines. It is to be noted that the feed of the No. 3 machine is managed by a wheel in front of the machine, instead of by a handle, as shown in No. 2.

The machines can be run either by belt or electric motor.

"QUEEN CITY" CRANK SHAPER.

Just eight years ago, soon after the introduction of high speed tool steels, the Queen City Machine Tool Co., Cincinnati, Ohio, was organized to manufacture back-geared crank shapers. The accompanying illustration represents the 16-in. back-geared shaper of today and the improvements in same will be incorporated in the three larger sizes during the present year. It is with these changes that this description has most to do; part of these changes have been an evolution of the past eight years, but the most important, the improvement in the radial bearings, is just being used on this machine.

Most of the trouble in any machine is due to poor lubrication and inadequate bearings. In the crank shaper, the bearings that have to do with delivering the driving power to ram, in the order of their importance, are: crank pin, bull wheel, driving and driven shaft, the lower rocker arm shaft and those that

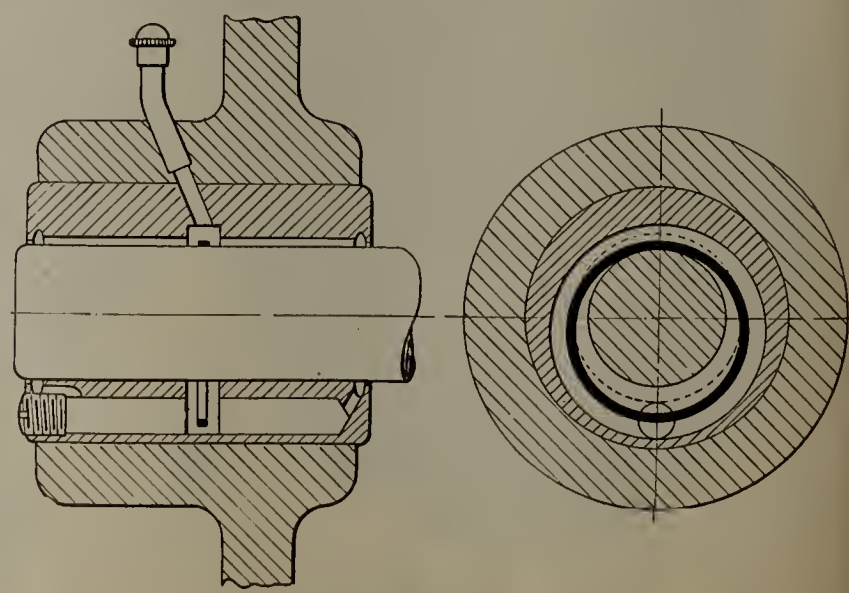

Lubrication of Bearings, Queen City Shaper.

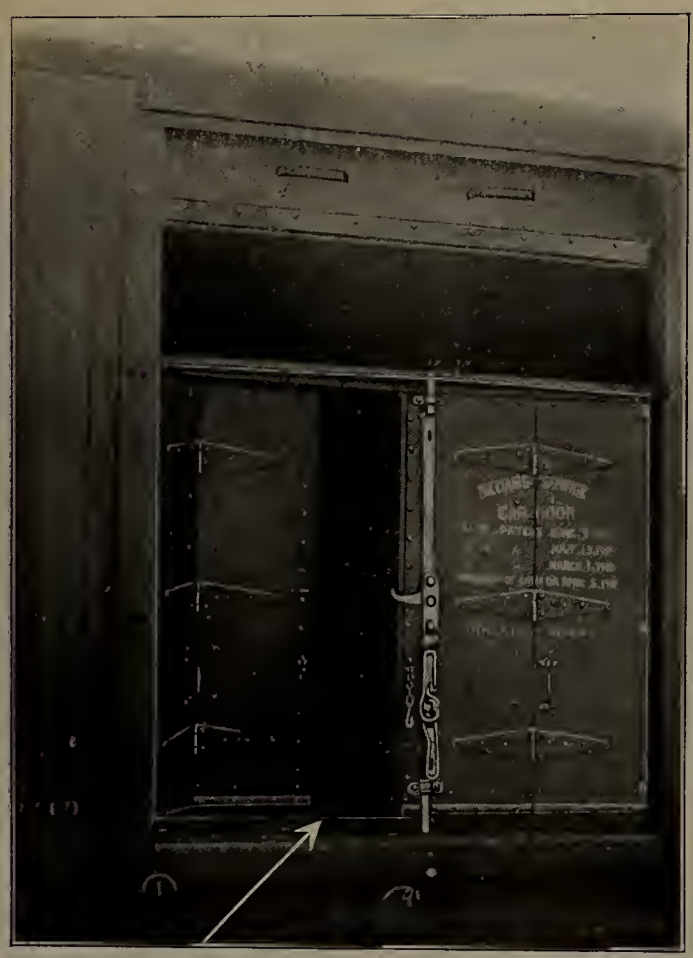

Williams Car Door. Top Section Pushed Up Under Roof, Lower Section Resting on First Supports, Movable Bar in Normal Position. Right Hand Door Closed and Fastened, Left Hand Door Partly Opened Inside Car.

connect link with rocker arm and ram. These all have heat treated and ground journals running in cast iron. The crank pin has the heaviest duty to perform in proportion to the size; the body of this is a crucible steel casting, has a heat treated sleeve pressed over the pin, and is ground to a running fit in the cast iron crank block; this block has an oil reservoir with channels cut to insure thorough distribution of the oil, which is lifted from the reservoir onto the crank pin by a chain, the oil always flowing back to the reservoir; thus a continual flow of oil is sure to result if proper attention is paid to providing a supply of good oil, as means have been provided for drawing off the oil when used up and replacing it with a fresh supply.

The bull wheel hub also has a hardened sleeve pressed over it, and is afterwards ground to size; the same oiling device is used here as on crank pin just described. The cone pulley shaft has a 3-point bearing eliminating the overhang at drive. The five journals of the driving and driven shafts are heat treated and ground, run in removable cast iron bushings, and are kept flooded with oil by means of ring oilers. The chain is used on crank pin and bull wheel hub, and other bearings in the feed that revolve, because a ring will not lift sufficient oil when shaper is running at slow speed. The line drawing shows the general construction of these bearings. The rocker arm and link shafts are provided with good lubricating facilities, although neither ring nor chain can be used, because the motion is not fully rotary, only about one-fourth of a circle being described.

The best test of a shaper is to note the proportion of the power delivered by belt that is available at the cutting tool. The best pull of this shaper is below the average, yet it will take very heavy cuts; the countershaft should run at 270 r. p. m. The four cone steps are 6 in., 7 9-16 in., 9⅛ in. and 10 11-16 in. for a 2-in. belt. Single gear ratio 4 to 1; back gear ratio 19 to 1. This combination will figure to the following cutting strokes to ram: 7.98, 11.78, 17.15, 25.31, 37.9, 55.95, 81.45 and 120.24 per minute, which it will be noted are in geometrical progression. There are twelve changes of feed instantly obtainable without danger to the operator's fingers. These eight speeds and twelve feeds can be so combined as to cover every requirement for the turning out of work rapidly. Roughing can be done much faster with a moderate speed and wide feed, and with less shock to the machine than when running at excessive high speeds.

The makers agree to produce work within .0005 inch for the full 16-inch stroke, and vise is square to this limit. The arch ram is a big factor in securing the rigidity of the cutting tool necessary to produce this accuracy, while the design and position of the table support and rigid construction of the column, rail, etc., enables the work to be solidly held while being machined; the least movement of the work has a tendency to cause the tool to gauge when taking heavy cuts; this table support is closely gibbed to table, eliminating the up and down movement of the work. The base has an extra solid footing as it is made very long to bring table support out to extreme end of table.

This shaper is also very low making it handy for operator whose convenience is considered at each point. This long and low design also provides for a long ram bearing in column and it will be noted that ram is very long in proportion; also, it requires less metal to produce a rigid, substantial machine.

WILLIAMS ALL-SERVICE CAR DOOR.

The door shown in the illustration herewith has been in service three years on the Illinois Central R. R.

It is a steel-hinged folding door, each side having two parts, and the attachment to the wooden door posts is partially recessed and arranged so that the door can swing in either direction.

The swing doors are fastened by a latch somewhat similar to that used on refrigerator cars, and the door sill is arranged with a flanged portion so as to make it waterproof. The main hinged doors are about 5 ft. high and are made of sheet steel ⅛ in. thick. Above these there is a metal

Inside View of Williams Door Closed and Fastened. No Possible Chance for Grain to Escape, or Injury to any other Class of Freight.

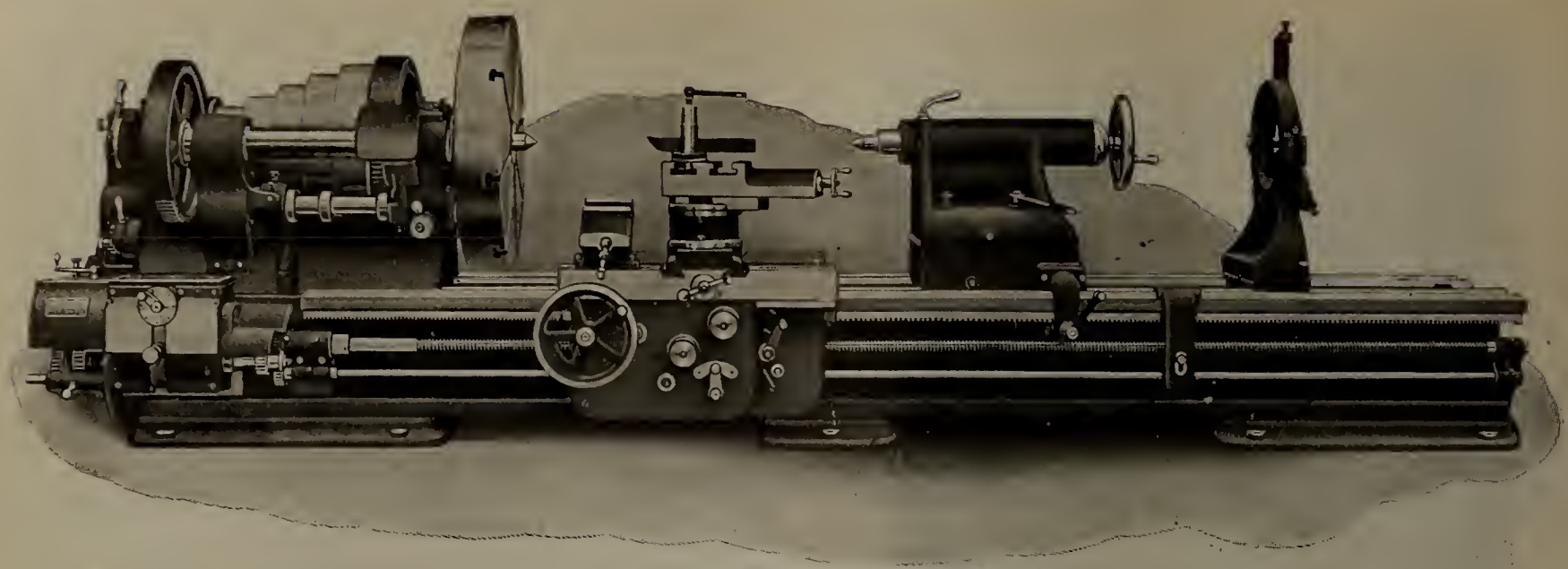

Schumacher & Boye 36-inch Triple Geared Lathe.

T-bar, which serves to stiffen the attachment of the upper part of the hinged doors and to make a bass support for the rolling shutters, which are folded up into the roof. These upper folding doors are made of wood and bound with iron straps.

There are several advantages claimed for this door, some of them are that it can be released in five seconds; a car of grain can be completely unloaded in 25 to 30 minutes, and the door replaced and closed in five seconds. The ordinary car door when closed to the elevator requires 15 to 20 minutes to be released so that the grain will run out. It is also claimed that this door has made several thousand miles under load pressure and has cost absolutely nothing for repairs. The various loadings include all kinds of grain, coal, baled hay, merchandise, flour, ship stuff, and other commodities found in the Mississippi Valley territory, and it always shows full at destination, never short. The Williams' All-Service Car Door not only supplies protection to grain in transit to all other commodities; eliminating the use of temporary grain doors and outside doors as well, both of which, to shippers and railroad companies alike, have been a source of annoyance due to loss, damage and waste.

An important advantage connected with the use of this door is the saving in the cost of wooden doors. The steel portion of the door weighs 600 to 700 lbs., or about 1,300 lbs. per car. The Williams All-Service Car Door Company, Clinton, Ill., is prepared to put on these doors for trial for any road desiring them.

SCHUMACHER & BOYE LATHE.

An interesting lathe of the most improved design is shown in the accompanying illustration. The machine is a 36-in., triple-geared, instantaneous change gear engine lathe upon which any pitch or feed is instantly obtainable.

A few of the advantageous points which make this lathe of special interest are mentioned below:

This lathe has been designed to meet the most exacting requirements of modern railway machine shop practice. The apron is of double plate of the most rigid construction possible, preventing overhang and straining of pinions and studs. The studs are made of tool steel, and run in bronze lined bearings. The feeds lock out automatically when cutting screws. The spindle is of 75 point carbon crucible steel and runs in phosphor bronze boxes. The carriage has a bearing the entire length of the Vs. on the bed, gibbed both front and back. The compound rest has power angular feed of 12 ins. travel. The apron and compound rest have steel gears throughout. The tail stock is provided with pawl to engage rack cast in bed.

The machine is manufactured by Schumacher & Boye, of Cincinnati, who have used, in its construction, the experience of many years in railway shop machine design.

"DAYTON" CAR TRIMMINGS.

The Dayton Manufacturing Company, of Dayton, Ohio, has recently issued a circular covering several of its latest designs of "Dayton" car basket racks. This company has developed the "Rex" patented coupling for car basket racks, which feature allows the easy removal as a unit of each bottom section, without disturbing the end brackets. Hexagon coupling sleeves, swiveled to the corners of the bottom sections, engage threaded studs on the cast brackets and firmly clamp the rack together.

"Rex" construction permits the installation of continuous racks by sections, enabling one workman to easily and quickly put up the longest continuous rack. When refinishing is necessary any section may be removed and refinished, without disturbing the balance of the rack.

"Dayton" car basket racks are of ample strength for the hard service required of railway equipment. They embody every improvement which has been developed in the long experience of this company, are of exceptionally graceful appearance, and are offered in a selection of finishes to harmonize with any interior decoration. The supporting brackets can in most cases be arranged to suit spacing of panels and contour of woodwork, and a majority of the racks can be furnished either single or continuous.

"Dayton" car basket racks are made in over two hundred different designs, illustrated in the general catalog of the Dayton Manufacturing Company, which covers fine bronze and brass car trimmings; porcelain and enameled iron sanitary fixtures for car toilet rooms; headlights and signal lamps; oil, electric and gas car lighting fixtures.

H. Emmons, Jr., Asst. Gen'l Mgr., Dayton Mfg. Co., Dayton, O.

Ryan-Johnson Hopper Raised as in Operation.

RYAN-JOHNSON COAL PASSER.

Firemen, while they realize the great value of the instructions and possessing the required knowledge of scientific firing, however, are aware of the fact that they cannot take advantage of such knowledge, nor be guided by any economical methods while they are compelled to work under the existing conditions.

It is a well known fact that on tenders as ordinarily designed and in general use at present, firemen are frequently unable to practice scientific or economical methods of firing on account of the following reasons: The lump-coal and slack is not properly mixed or prepared, nor is it placed where the fireman can conveniently reach it. Through the vibration of the tender the lump-coal is separated from the slack, a portion of these lumps are sliding forward by gravity until they become embedded in the slack, and then the whole mass has to be moved forward by physical force, to a place where the fireman can reach it so that he can distribute the fuel properly in the firebox. The slack has a tendency to settle in the rear-portion of the coal-pit, where it accumulates, and will remain there until it is removed by the fireman. Such fuel is but air-slacked, water-soaked residue from previous coalings, and tenders often carry from three to six tons of the aforementioned accumulations in the back end of the coal-pit, which the fireman is not called upon to use until sometime when he has an exceptionally hard trip. Just when he should have the best of coal and within easy reach to get his train over the road, then his labor is increased by being compelled not only to handle this inferior fuel twice, but he is also forced to burn a great deal more coal than would have been necessary had not the fire been spoiled.

It is a conceded fact, that a large per cent of the so-called engine failures on account of steam, are in reality "man-failures" and are due to the fact that the engines are improperly fired. The fireman may be efficient but he lacks the physical endurance necessary to retain that efficiency over the entire division. The records show, that when engines left the roundhouse in first-class condition and made failures on the road on account of lack of steam, the failures nearly always occurred at the end of the trip, and after the fireman had lost his efficiency.

It can thus be readily understood that the designing of tenders is a very important point in locomotive construction, as not only the fuel-consumption, but the fireman's labor is largely dependent upon it. A tender so designed that it will enable the fireman to practice scientific and economical methods of fireing at all times with a great deal less fuel and labor, and one on which the entire fuel supply is mixed or properly prepared before it is used, one on which all of the coal is forced to a place within convenient reach of the fireman at all times without any extra labor, one on which a sufficient amount of coal can be carried that it will enable the engine to pull its train from one terminal to the other without stopping at intermediate coaling stations, one on which there is no incentive to overload whereby a part

Ryan-Joh

of the fu
motion
deter
It
th
1

Tender Before Hopper Is Applied.

better service as engineers, which means a betterment of the service to the company in general, and a greater mileage between the shopping of the engines.

The illustrations show the device clearly. For tenders now in use the makers recommend the construction of a supplementary hopper that can be made to fit the inside walls of the coal pit without the necessity of cutting away any part of the tank.

By referring to the diagrams it can readily be seen that the mechanical coal-passer is of a very simple construction. It consists of a supplementtary hopper as shown and indicated by letter D, which is connected to the bottom of the coal-pit by means of strong cast steel hinges as indicated at E, a Tee piston-rod C is connected to the back end of the hopper by the connection indicated at F and to the piston head B which is provided with a buffing spring as shown in the cylinder A which is placed in the water space through the tender-tank, the cylinder being provided with suitable release and drainage ports A and G.

By admitting pressure into the cylinder beneath the piston head, the Tee piston is actuated to its full stroke, as shown in view B, the upper port being wide open to the atmosphere allows the pressure to escape before the spring comes in contact with the buffing plate, the buffing spring provided for on the piston head acts as a cushion and absorbs the balance of the shock. The hopper being raised in this manner, moves the fuel forwardly in the coal-pit. By closing off the pressure, the weight of the hopper forces it to return to its original position, the piston head on its downward stroke after passing the upper release port forces the entrapped pressure which now acts as a cushion, out through the lower exhaust and drainage port G, which is only 3/16ths of an inch in diameter. This movement allows the hopper to settle gradually to its normal position, as shown in view A. This drainage port G is a very essential factor, as it not only provides a drain for condensed water in the cylinder, but it also acts as a vent for circulating steam which prevents freezing in cold weather.

The device is manufactured by the Ryan-Johnson Co., Railway

'XIBLE METALLIC ROOF.

in railway equipment is fast being
of the box car roof, this change
-apid depreciation of the wood
and decaying. Besides,
ossible to provide for
r receives while in
nails or bolts
failing to
boards,
these
ploy-

ment of steel throughout practically eliminates the fire hazard and provides a more substantial and permanent construction.

The Franklin Flexible Metallic Roof was designed to meet these conditions. It is constructed of metal throughout, ample flexibility between the sheets being provided, and the various members of the roof frame are made so as to lock themselves together, thus dispensing with all bolts or rivets for this purpose. The parts are few in number, and are so interlocked as to prevent them from shifting. The supporting frame is not only sufficient to carry the roof, but of ample strength to thoroughly tie the sides and ends of the car together.

Each roofing sheet is entirely surrounded by troughs or gutters formed by the "U" section ridge pole and car lines. Caps cover the gaps between the sheets, and any water which may enter under the caps, falls into the troughs and is carried to the sides or ends of the car by gravity, the car lines extending through the side, and the ridge pole through the end plates for this purpose.

As all of the parts which are exposed to the atmosphere are thoroughly galvanized, and as the air can freely circulate through the ridge pole and car lines, excessive corrosion will not take place; further holes are placed at intervals along the top edges of the ridge pole in order to provide for the escape of hot, foul or moisture-laden air from the inside of the car to the outside atmosphere, thus preventing the accumulation of moisture on the underside of the roofing sheets and the members of the roof frame.

Although new in its general application, the various parts entering into the construction of the Franklin Flexible Metallic Roof, such as pressed steel car lines, heavy steel roofing sheets, etc., have been extensively used in the best type of car construction for some years.

The roof can be applied by the usual labor generally employed on this class of work. On account of the small number of parts and the locking together of the frame members, the amount of labor to apply the roof is greatly reduced.

In the event of the ridge pole, purlins or car lines (all of which are steel) being distorted through wreck or fire, they usually can be straightened out and used again, and if they should be distorted beyond reclaiming, the salvage would amount to considerable, whereas if they were of wood they would either be shattered or burned.

As there are no roofing boards to be replaced or refastened, and since the running board saddles are of metal instead of wood, the running board and extensions being securely attached with bolts instead of nails or screws, the extent of repairs to the Franklin Flexible Metallic Roof is reduced to the minimum. This is very important, in that the jurisdiction of the Interstate Commerce Commission has recently been extended to include running boards and roof handholds. The roof, therefore, fully meets the commission's requirements.

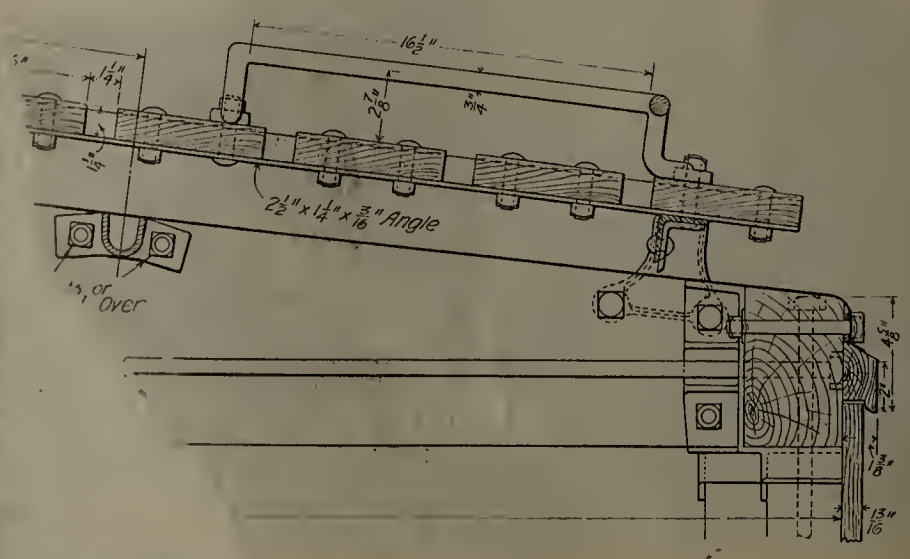

Comfort to Passengers

Imperial Car Window Screens

NOTHING can be worse than a hot, disagreeable trip with closed windows and poor ventilation, or where windows are opened without screen protection, letting in the dust and cinders.

Imperial Screens **allow car windows to be raised to their full height,** giving clear vision, good ventilation, and greatly adding to the comfort of the passengers in warm weather.

The screen frame is made of bronze metal covered with copper wire cloth of fine mesh. It is a permanent fixture and need not be removed during the winter, or when necessary to clean the windows, as it can be pushed to top of slides, where it is held by thumb bolts.

Furnished in suitable sizes for all windows and end doors, and can be applied to old or new cars.

Imperial Screens have been adopted by a large number of railways.

Safety to Passengers

and also ***Low Maintenance Cost***

ars two very important objects
that have been attained in the

National Steel Trap Door and Lifting Device

Safety to Passengers.

If for any cause the lock which h door closed should be released, t rises to an angle of 45 degr cut, thus preventing pas through. The vesti opened until the tical position

Natio steel com str

GENERAL RAILW

General Offices: 531-532-533

New York Office: Transportatio

WE ALSO MANUFACTURE
Metallic (Steel) Sheathing
Perfection Sash Balance.
Resisto Insulation.

EXHIBIT OF McCONWAY & TORLEY CO.

The McConway & Torley Co., of Pittsburgh, Pa., had in its exhibit a new design of freight couplers called the "Penn." This coupler is a combination of the features of the Pitt and Janney "X" couplers, providing for an increased bearing surface between the locking pin and knuckle, this surface being increased to five square inches, as shown by the line drawing herewith.

This coupler is of the Janney type with a vertical locking pin which does not extend through the bottom of the coupler. An important feature is the easy accessibility of parts, the locking pin and knuckle opener can be removed and replaced without removing the knuckle. The coupler also has a heavy section of metal in its contour face. It has the features of a "Lock-to-the-

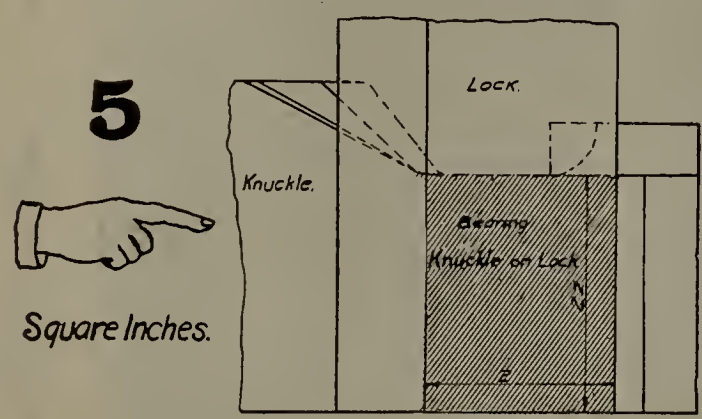

"Penn" Freight Coupler, McConway & Torley Co.

Lock," which positively prevents the locking pin from climbing or creeping by the oscillation of the cars in bumping over rough frogs or switches, a "Lock-Set" which retains the locking pin in the open position without the necessity of locking up the uncoupling lever on the side of the car, and a positive "Knuckle-Opener" which pushes the knuckle open to its fullest range of movement by the operation of the uncoupling lever at the side of the car, thus preparing for automatic coupling without any further adjustment or attention from the trainmen.

The coupler [illegible] ibit has a long head designed to meet the latest [illegible] e Interstate Commerce Commission, in [illegible] en certain cars when coupled up

[illegible] ted by the McConway [illegible] count of its novel [illegible] irable features [illegible] for the [illegible] e, and [illegible] truck [illegible] h a [illegible] oil [illegible]

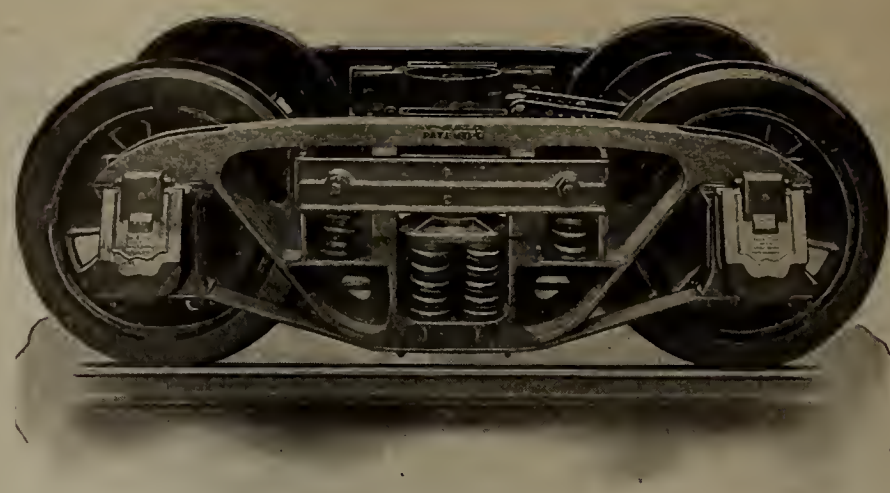

Buhoup Flexible Truck.

desirable features. The side frame and bolster and other parts of the truck are made from acid open heartth steel, thoroughly annealed, and conforming to standard cast steel specifications.

EXHIBIT OF BUFFALO BRAKE BEAM CO. AT ATLANTIC CITY CONVENTIONS.

The Buffalo Brake Beam Co. New York, had a very interesting exhibit at the mechanical conventions. It consisted of a full line "Buffalo" I-beam and special section brake beams for inside and outside hanging, also a line of narrow gauge, mine and logging car brake beams, Buffalo standard truss beams to meet every requirement of freight and passenger service. "Buffalo" brake beam forgings, consisting of one and two-piece fulcrums, safety chain clips and wheel guards.

The accompanying illustration shows a new adjustable brake head, which is used on high speed passenger beams and was shown for the first time at this convention.

The head is designed for great strength at points of greatest strain. It is made of high grade malleable iron, reinforced with steel inserts. Tests show the head to be of extraordinary strength. The adjustment feature is entirely new, simple and effective, with the minimum number of parts. Adjustments can be easily and speedily made without disturbing the brake beam proper.

The Buffalo Brake Beam Co. is one of the largest exclusive brake beam manufacturers, and maintains general offices at 30 Pine street, New York, with western sales office, Syndicate Bldg., St. Louis, and factories at Buffalo, N. Y., and Brantford, Ont.

Buffalo Brake Head.

SOLID FORGED TRUCK LEVER CONNECTION.

The Union Equipment Co., with office in the Oliver building, Pittsburg, Pa., has placed on the market a truck-lever connection which embodies remarkable strength with both simplicity and novelty of design. It consists of an inverted U shape bar, closed in at the bottom, and made from open-hearth bar steel of one-half inch thickness for the standard bar.

In the process of manufacture the bars are cold sheared into correct lengths, the jaws are reinforced by drop forging, some of the material displaced by the holes being pushed out around the hole to give the added bearing surface for an M. C. B. pin after which the bar is hot pressed into the shape as shown in the illustration.

When considering the truck lever connection in its relation to the other details forming the brake rigging, it should be borne in mind that, with the exception of the push rod, this connection or bottom rod is the only member which is subjected to a compression load, and when, in addition to this fact the load across this bar may be more or less eccentric due to offset or even poor alignment, the importance of ample strength in this detail is second only to ample strength in the brake beam itself.

The material in the Union solid forging connection is placed to effectively resist the compression load. A maximum of material in the outer fiber of the bar with a corresponding increase of depth and width presents an ideal column section.

A number of comparative tests were made during the development work and some interesting data obtained on the strength of the various styles of connections in use. Below is reproduced a copy of one of these tests, which were made by the Pittsburg Testing Laboratory on an Olsen testing machine of 200,000 lbs. capacity. In supporting these bars in this machine service conditions were as nearly as possible imitated and the tests may be depended upon to show very nearly what would happen in actual service. The bars were supported, one end in the inner and the other end in the outer truck lever hole, being hld in place by means of 1-in. bars. It should be noted that while the solid-forged connection developed a strength of 39,000 lbs., the welded bar failed at 13,000, and took a serious set at 12,500 lbs.

1¾-Inch Round (Solid) Welded Type Connection.

	Load. Lbs.	Deflection. Inches.
	1,000	0
	5,000	5/64
	6,000	3/32
	7,000	1/8
	8,000	9/64
	9,000	5/32
	10,000	3/16
Off to	1,000	0
Again to	10,000	13/64
	11,000	15/64
	12,000	5/16
	12,500	7/16
Off to	2,000	5/16
	13,000 Failed.	Permanent set

Union Solid Forged Connection.

Load. Lbs.	Deflection. Inches.
10,000	0
11,000	1/64
12,000	1/64
13,000	1/64
14,000	1/64
15,000	1/64
18,000	1/64
20,000	1/64
25,000	1/32
30,000	1/32
35,000	3/64
39,000	Failed to resist

It is of interest to note that a bar, in every way similar to the open in the above test, but made of 0.45 carbon steel instead of commercial open-hearth, resisted a compression load of 57,000 pounds. The solid forged connection is made to suit every specification. In passenger service where the brake loads are exceptionally severe, a bar of this type may be made lighter and yet have a strength far above requirements.

Union Solid Forged Truck Lever.

NEW SIDE BEARING TRUCK.

There has lately been placed on the market a new car truck which embodies in design a number of new and novel features. In the past a number of attempts have been made to design a side bearing truck that would successfully eliminate the center-bearing principle, but it seems to have been left to the Summers Steel Car Co., of Pittsburg, to introduce the feature that makes this entire scheme feasible, the balanced element in the side-bearing truck.

Side bearings, when placed in line with or outside of the line of the wheels when engaging directly with the load lack the element of flexibility that is necessary between truck and load in order to successfully keep to the rail, when traversing uneven track. It is this difficulty that is overcome in a simple and very practical manner in the Summers truck, offering a practical solution to the difficulties resulting from the present center-plate and side bearing arrangement when applied under equipment of very rigid construction or under car bodies that should be relieved of the effects of stresses resulting from the alternate contacting of side bearings on opposite corners of car body, as tank cars, refrigerator cars, locomotive tenders, etc.

Briefly, the truck consists of side bearing rocker seg-

ments placed in the spring saddle, in line with side frames, upon which rests a cradle which pivots about the king pin and is free to move up and down on same with the variations in load. On the outer end of this cradle or evener are placed the inclined hangers, in pairs, T heads engaging suitable double bearing slots in the cradle, the cross-bar at their bottom and tying them together and engaging with suitable hangers on the car body. The segmental rockers are nearly 20 inches radius in the truck as exhibited, which means, in effect, that the entire load is carried, at all times, upon four roller-wheels of nearly forty inches diameter, always resting on all four corners.

With one truck on the level and the other on twisted or super-elevated track, as when going from straight track onto curve or vice versa (the severest service condition encountered), the end out of level will adjust itself, the car body moving downward and inward with relation to the curve. The other truck will in a similar manner effect the equalization of its share of the load. When considering the mechanical features of this inclined hanger arrangement, it should be borne in mind that the lower ends of the hangers on each truck are virtually connected together, through the car body, and these hangers will move or swing one way or the other in unison, responding to whatever gravity or centrifugal forces there may be until the horizontal components for each opposite pair of hangers are equal and thus balanced.

When rounding curves the segmental rollers come into play in conjunction with the balanced feature and the car body will assume an inclination commensurate with the speed and super-elevation, if any, on the curve, and, similarly, for a stop or a lower than "correct" speed about a given curve, the top of a car body will swing outward and the bottom inward relative to the curve, thus equalizing whatever centrifugal or gravity forces that exist. This effect is due to the fact that the center of gravity is always a considerable distance below the virtual center of motion formed by the junction of the radial components through the inclined hangers.

A pair of these trucks equalize in unison, each taking its proper share of the abnormal conditions of rail or load. When designed to take care of 4 inches of vertical motion, a pair of these trucks will absorb 8 inches of twist in a car length of track without transmitting such stresses into the car body. In a like manner, for any car body of very rigid construction such as all steel passenger, box, gondolas, etc., this truck will effect an equalization of the axles and wheels without throwing such stresses into the car body.

For any car body the tresses that result from the rigid center-bearing truck going over uneven track are here eliminated. Thus for refrigerator or tank cars, where air or water-tight construction is imperative, this feature is invaluable in that car body is relieved of twists and distortions imposed by the alternate contacting of side bearings on the opposite corners of car.

The Summers all steel box car, as exhibited at Atlantic City, is equipped with a pair of the side bearing trucks. It has been in continuous service for nearly a year, having in that time traversed the continent, going to San Francisco in 23 days under a load of 105,353 lbs. of tin plate and returning in the short time of 16 days under a load of wine.

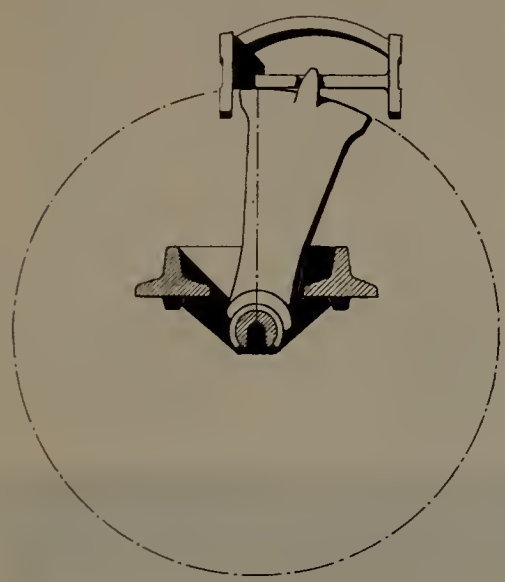

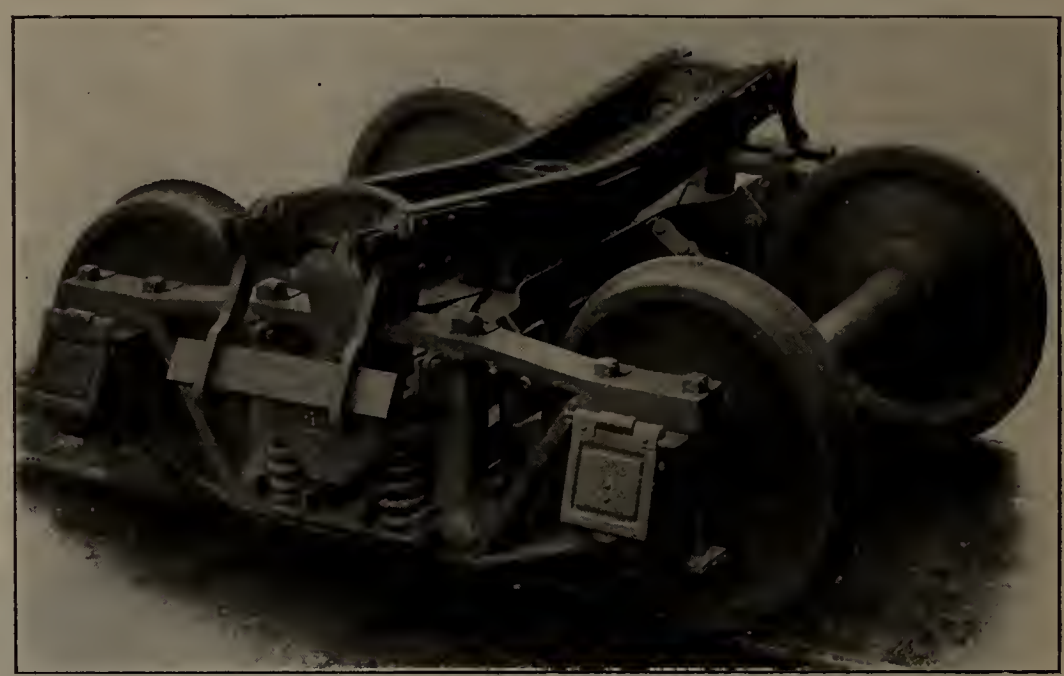

Summers Side Bearing Truck.

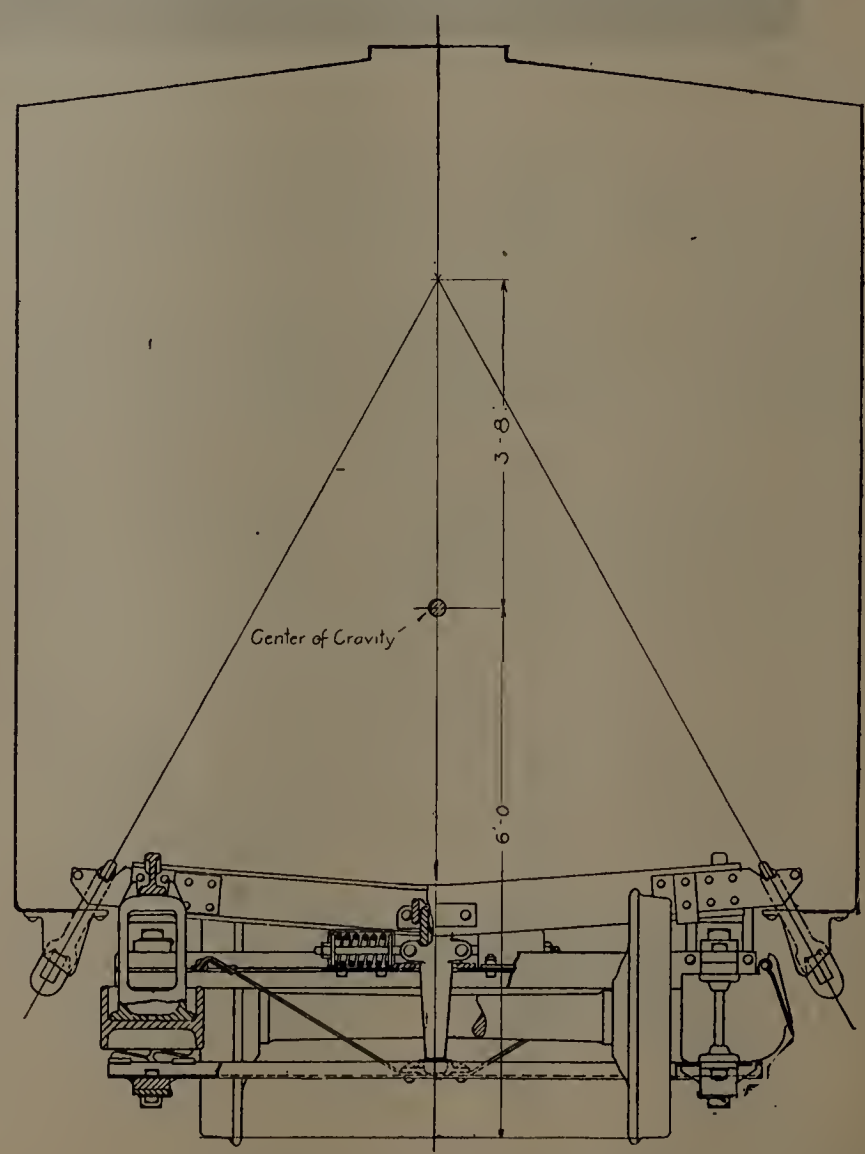

End View of Arrangement of Inclined Hangers, Etc., Showing that Car Body Maintains a Level Position.

RAILWAY MASTER MECHANIC

Established 1878

Published by THE RAILWAY LIST COMPANY

WILLIAM E. MAGRAW, Pres. and Treas.
CHAS. S. MYERS, Vice-Pres.
C. C. ZIMMERMAN, Bus. Mgr.
J. M. CROWE, Mgr. Cent. Dist.
LYNDON F. WILSON, Managing Editor
OWEN W. MIDDLETON, Assoc. Editor
KENNETH L. VAN AUKEN, Assoc. Editor

Office of Publication: Manhattan Building, Chicago
Telephone, Harrison 4948
Eastern Office: 50 Church Street, New York
Telephone Cortlandt 5765
Central Office: House Bldg., Pittsburg, Pa.

A Monthly Railway Journal

Devoted to the interests of railway power, car equipment, shops, machinery and supplies.
Communications on any topic suitable to our columns are solicited.
Subscription price, $2.00 a year; to foreign countries, $2.50, free of postage. Single copies, 20 cents. Advertising rates given on application to the office, by mail or in person.
In remitting, make all checks payable to the Railway List Company.
Papers should reach subscribers by the 16th of the month at the latest. Kindly notify us at once of any delay or failure to receive any issue and another copy will be very gladly sent.

Entered as Second-Class Matter June 18, 1895, at the Post Office at Chicago, Illinois, Under Act of March 3, 1879.

Vol. XXXV. Chicago, August, 1911 No. 8

CONTENTS.

Editorial—
Bentley to General Foremen....365
H. J. Slifer Sends Circular to Employes....365
Specifications for Fuel Oil....365
Traveling Engineers' Association....366
International Railway General Foremen's Association....366
Steel Buffet Baggage Cars, Western Pacific....367
Electrical Equipment in Railway Shops....368
Consolidation Locomotives, N., C. & St. L. Ry.....z....372
Prevention of Accidents....373
An Interesting Locomotive Model....374
Development of Locomotive Tubes....375
Reminiscences of a Master Car Builder....377
Corrosion Tests of Brass and Bronze....377
Discussions—Master Car Builders' Convention....378
Train Lighting....378
Revision of Standards....379
Coupler and Draft Equipment....380
Train Pipe Connections....384
Discussions—American Railway Master Mechanics' Convention....385
Locomotive Stokers....385
Construction of Locomotive Frames....388
New Books....390
Personals....391
Among the Manufacturers....392
New Literature....392
Twentieth Century Automatic Oil Cup....393
Fountain Pens in Dynamometer Car....393
Morton Draw Cut Shaper....395
Folding Steel Horse....395
Brake Ream Deflection....396
Industrial Notes....396
Moon Headlight Outfit....397
Interesting High-Duty Drill....397
Electrically Operated Drills....399
Mason Safety Treads....400
Allen Car Ventilator....400
Recent Railway Mechanical Patents....402

BENTLEY TO THE GENERAL FOREMEN.

H. T. Bentley, assistant superintendent of motive power of the Chicago & North Western, was one of the non-member speakers at the convention of the International Railway General Foremen's convention in Chicago, July 26. Mr. Bentley is a very popular man with those employees whose work relates to detail problems in railway shop operation. His own thorough shop training gives him somewhat unusual qualifications as an advisor of the general foremen, and the latter appreciate this fact.

Mr. Bentley's remarks included a few salient points in the line of advice. He said that foremen must keep up with the times and that there are two methods of doing so—reading and visiting. He insists that his foremen read the leading mechanical publications regularly and that they get out of their home shops in personal search for information at least once a month. In closing he said: "Work hard and consistently and get results. Lots of men work hard and do nothing. Results alone are worth while."

Perhaps this advice will be considered somewhat difficult to follow because of the fact that results are sometimes hard to foresee, but had he explained in detail, Mr. Bentley would have said that there is too much blind effort; that no work should be started without some definite, concrete end in view; and that once the work is started there should be no stone left unturned until the anticipated result is fully obtained. Work started and given up unfinished is in most cases work without result.

H. J. Slifer, general manager of the Chicago Great Western R. R. has recently issued a circular to all employes asking their co-operation in cutting down expenses. Among other things he says "A penny saved is a penny earned, applies to individuals and corporations alike. The opportunity of a personal inspection of our railroad house-keeping during the past few weeks has convinced me that we must begin, and being at once, to earn by saving." A list of the new, second-hand, and scrap values of everything from axes to washers is given and it is hoped that it will call the attention of those handling them to the fact that the company really does pay money for them.

SPECIFICATIONS FOR FUEL.

In consequence of the success that has attended the use of heating-value specifications in buying and selling coal there has arisen a demand for similar specifications, based on careful tests, to govern the purchase of fuel oils and the refined products of petroleum. The Bureau of Mines has therefore issued Technical Paper No. 3, by Irving C. Allen, on "Specifications for the purchase of fuel oil for the Government," with directions for sampling oil and natural gas. These specifications should be of considerable assistance to railways which are large purchasers of fuel oil.

"These specifications, to be satisfactory," says the author, "should establish not only the heating value of the oil, and thus show, like the specifications for coal, the number of heat units the purchaser obtains for a given price per unit quantity of fuel, but also the physical character of the

oil, its flash point and burning point, and the quantity of extraneous matter it contains.

"It is evident that an essential feature of any such plan of purchasing oil in bulk is an equitable method of sampling deliveries—that is, a method that insures the taking of representative samples.

"The Bureau of Mines has received many inquiries from Government bureaus and from private concerns regarding fuel-oil specifications and the sampling of purchases. In reply to these inquiries the bureau issues this paper, which, although intended primarily for the guidance of Government officials, may be of service, the bureau trusts, to all persons who buy or sell fuel oil."

General specifications for the purchase of fuel oil are given as follows:

In determining the award of a contract, consideration will be given to the quality of the fuel offered by the bidders, as well as the price, and should it appear to be to the best interest of the Government to award a contract at a higher price than that named in the lowest bid or bids received, the contract will be so awarded.

Fuel oil should be either a natural homogeneous oil or a homogeneous residue from a natural oil; if the latter, all constituents having a low flash point should have been removed by distillation; it should not be composed of a light oil and a heavy residue mixed in such proportions as to give the density desired. It should not have been distilled at a temperature high enough to burn it, nor at a temperature so high that flecks of carbonaceous matter began to separate. It should not flash below 60°C. (140°F.) in a closed Abel-Pensky or Pensky-Martens tester. Its specific gravity should range from 0.85 to 0.96 at 15°C. (59°F.); the oil should be rejected if its specific gravity is above 0.97 at that temperature. It should be mobile, free from solid or semisolid bodies, and should flow readily, at ordinary atmospheric temperatures and under a head of 1 foot of oil, through a 4-inch pipe 10 feet in length. It should not congeal nor become too sluggish to flow at 0°C. (32°F.). It should have a calorific value of not less than 10,000 calories per gram (18,000 British themal units per pound); 10,250 calories to be the standard. A bonus is to be paid or a penalty deducted according to the method stated under section 21, as the fuel oil delivered is above or below this standard. It should be rejected if it contains more than 2 per cent water. It should be rejected if it contains more than one per cent sulphur. It should not contain more than a trace of sand, clay, or dirt.

Each bidder must submit an accurate statement regarding the fuel oil he proposes to furnish. This statement should show: The commercial name of the oil; the name or designation of the field from which the oil is obtained; whether the oil is a crude oil, a refinery residue, or a distillate; the name and location of the refinery, if the oil has been refined at all. The fuel oil is to be delivered f. o. b. cars or vessel, according to the manner of shipment, at such places, at such times, and in such quantities as may be required, during the fiscal year. Should the contractor, for any reason, fail to comply with a written order to make delivery, the Government is to be at liberty to buy oil in the open market and charge against the contractor any excess of price, above the contract price, of the fuel oil so purchased.

TRAVELING ENGINEERS' ASSOCIATION.

The nineteenth annual convention of the Traveling Engineer's Association will be held at the Hotel Sherman, Chicago, Ill., commencing at 10 A. M., Tuesday, Aug. 29, 1911, and continuing four days.

The secretary has succeeded in securing very reasonable rates, at the new Hotel Sherman, for members, their families and friends, which are as follows:

Sixty single rooms with bath, $2.00 per day, single; $3.00 double.

One hundred single rooms with bath $2.50 per day, single; $4.00 double.

Two hundred single rooms with bath $3.00 per day, single; $4.00 double.

One hundred and fifty single rooms with bath $3.50 per day, single; $5.00 double.

One hundred single rooms with bath $4.00 per day, single; $6.00 double.

The Pullman Company has granted one-half rates for members of the association and the dependent members of their families to and from the convention. In order to avail themselves of these rates, it will be necessary for members to make application to the secretary, stating how many persons, relationship, names and ages, also stating the route over which they intend to travel, stop-over, etc.

INTERNATIONAL RAILWAY GENERAL FOREMEN'S ASSOCIATION.

The Seventh Annual International Railway General Foremen's Convention opened Tuesday at the new Sherman Hotel, Chicago, with C. H. Voges presiding. An address of welcome was made by E. F. Wade, assistant corporation counsel of Chicago. F. C. Pickard's report on "How Can Shop Foremen Best Promote Efficiency," was discussed during the greater part of three days.

A paper was read Thursday afternoon by D. E. Barton on Methods of Shop Organization. There were addresses by J. F. Devoy Tuesday afternoon, by H. T. Bentley Wednesday afternoon and Angus Sinclair Thursday afternoon.

F. C. Pickard, master mechanic C. H. & D., at Indianapolis, was elected president; J. A. Boyden, of the Hornell shops of the Erie, was elected first vice-president; T. F. Griffin, of the C. C. C. & St. L. at Indianapolis, was elected second vice-president; W. Smith, of the Chicago & North Western at Fremont, Neb., was elected third vice-president; L. A. North, of the Illinois Central at Chicago, was elected fourth vice-president, and L. H. Bryan, Duluth & Iron Range at Two Harbors, Mich., was elected secretary and treasurer. The executive committee was as follows: W. W. Scott, C. H. and D., Indianapolis, and W. C. Reyer, N. Y. C. & St. L., at Nashville, Tenn.

The annual meeting of the Railway Supplymen's Association in connection with the convention of the International Railway General Foremen's Association, was held at the Hotel Sherman, Chicago, July 26. The following officers were elected: Chairman, J. C. Younglove, H. W. Johns-Manville Co., Chicago; secretary and treasurer, B. J. Nelley, Jenkins Bros., Chicago, and two directors to serve three years, George R. Carr, Dearborn Drug & Chemical Works, Chicago; and Henry S. Mann, Goldschmidt Thermit Company, New York.

The following were exhibitors: Joseph T. Ryerson & Son, Chicago, machine tools; Fairbanks Morse Co., Chicago, ratchet and hydraulic jacks; The Okadee Co., Chicago, Okadee

blow-off valve and Clark locomotive blow-off system; Chicago Pneumatic Tool Co., Chicago, pneumatic hammers and drills; U. S. Metallic Packing Co., Philadelphia, piston rod packing; Armstrong Tool Co., Chicago; lathe dogs and tool holders; Carpenter Steel Co., Reading, Pa., high speed steel; O'Malley-Beare Valve Co., blow-off valves and gage cocks; Celfor Tool Co., Buchanan, Mich., flat twist drills; Goldschmidt Thermit Co., New York, welding processes; Hunt-Spiller Mfg. Co., Boston, Mass., locomotive parts; American Steel Foundries, Chicago, truck frames and Davis steel wheels; Chicago Railway Equipment Co., Chicago, Creco brake beams; Adreon Mfg. Co., St. Louis, railway specialties; Franklin Railway Supply Co., driving journal lubricator and the Franklin fire door; Ashton Valve Co., Boston, safety valves and steam gages, McMaster-Carr Supply Co., Chicago, railway specialties; Nathan Mfg. Co., New York, injectors and boiler fittings; Safety Car Heating & Lighting Co., New York, steam heat apparatus; Templeton-Kenley Co., Chicago, simplex jacks; S. F. Bowser Co., Ft. Wayne, Ind., oil storage and supply systems; Marshall Ventilated Mattress Co., Chicago, ventilated cushions; Jenkins Bros., New York, valves; National Boiler Washing Co., boiler wash and blow out systems; Detroit Lubricator Co., Detroit, Mich., lubricators; Cincinnati-Bickford Tool Co., Cincinnati, O., machine tools; U. S. Metal and Mfg. Co., railway specialties; Barret Mfg. Co., coal tar products; Emery Pneumatic Lubricator Co., St. Louis, air brake lubricators; McCroskey Reamer Co., Meadville, Pa., expanding reamers and drill chucks; Hoskins Mfg. Co., Chicago, electric furnaces; Geometric Tool Co., New Haven, Conn., die heads and die grinders; Dearborn Drug & Chemical Co., Chicago, feed water treatment; Grip Nut Co., Chicago, grip nuts; Manning, Maxwell & Moore, Inc., New York, Hancock inspirators, Aschroft gages, and Consolidated safety valves; Pratt & Letchworth Co.; Buffalo, N. Y., steel and malleable castings; Locomotive Improvement Co., Clinton, Iowa, the Markel driver journal box; National Machinery Co., Tiffin, O., machine tools. Independent Pneumatic Tool Co., Aurora, Ill., pneumatic hammer and drills; Firth-Sterling Steel Co., E. S. Jackman Co., Chicago, agents Bluechip steel; Garlock Packing Co., Palmyra, N. Y., air pump and piston rod packing; Matthews-Davis Tool Co., St. Louis, Davis expansion coring bar; Railway Age Gazette, Chicago and New York; Crane Co., Chicago, valves and fittings; Otley Mfg. Co., Chicago, graphite products; W. S. Metallic Packing Co., Philadelphia, throttle and piston rod packing; McCord & Co., Chicago, journal boxes and locomotive lubricators; American Arch Co., New York, brick arches; Locomotive Super-heater Co., New York, superheaters; Carborundum Co., Niagara Falls, N. Y., abrasions; Greene, Tweed & Co., New York, palmetto packings; Crucible Steel Co., Pittsburgh, Pa., high speed steel; Storrs Mica Co., Owego, N. Y., mica chimneys; Angus Sinclair Co., New York; and the Joseph Dixon Crucible Co., Jersey City, N. J., graphite products.

Steel Baggage-Buffet Cars, Western Pacific Ry.

The accompanying photographs and drawing illustrate a lot of 10 all-steel buffet baggage cars which have been built by the Barney & Smith Car Co., of Dayton, Ohio, for the new passenger service recently inaugurated on the line of the Western Pacific Railway. These cars are 70 ft. 2 ins. over end sills; and have a self-supporting steel underframe with deep center girder of the fish belly type. The center sills being built up of plates with top and bottom angles; the bolsters and cross ties are made up of pressed shapes and plates riveted to center construction and side sills, the platform underframing consisting of a continuation of the main center sills with two additional channel supports, the nose piece or platform end sill being of cast steel.

The superstructure framing is composed of pressed steel channel side posts with "Z" bar posts at side door opening in baggage room, channel side plates—deck made up of pressed steel shapes—Barney & Smith steel anti-telescoping end framing of "Z" bar construction, with pressed steel end plates, and "I" beam door posts at baggage end.

The flooring consists of No. 14 steel plate underflooring riveted to steel underframe—"I" pressed "Z" bar on top of this floor and 1½-in. hair felt compressed to 1-in. steel corrugated flooring known as Flexolith on top, ⅝ in. thick at thinnest part. In the baggage room there is applied over the Flexolith a course of maple flooring with cross strips at door openings.

As will be seen by the plan, these cars have a baggage room, and smoking compartment with fully equipped buffet between —the smoking room having section seats at one end with book case and writing desk at opposite end.

All interior finish partitions and lockers, etc., are of steel, making these cars all steel with the exception of the window sash, chair frames and top course of flooring in baggage room —these items being of wood—and the ceiling in the upper and lower deck being a composition known as Agasote. These cars have wide vestibule at passenger end and new type stub end vestibule at baggage end—are equipped with axle lighting device, with storage batteries, direct steam heat, and have all the latest and most serviceable devices and specialties.

In addition to the cars covered by this brief description, the Barney & Smith people have built and delivered to the same road a lot of eight very handsome steel underframe dining cars. From the character of this equipment it is quite apparent that the Western Pacific Railway intends having for its passenger traffic the very best accommodations obtainable.

New Steel Library-Buffet-Baggage Car for Western Pacific.

Superstructure Framing, Western Pacific Steel Cars.

ELECTRICAL EQUIPMENT IN RAILWAY SHOPS.

In no other class of industrial plants is the economy and universal adaptability of electric motor drive more clearly exemplified than in the numerous applications in and around the modern railway shop. The character of work in such shops requires the use of practically every type of power driven machine designed for wood or metal working, and beside, a great number of miscellaneous applications such as motor driven air compressors, pumps, transfer and turn tables, cranes, ash conveyors, vacuum cleaners etc. A large proportion of the work involved consists in repairs on damaged or wornout rolling stock, so that in many instances the financial loss due to the temporary withdrawal of this equipment from service, is far greater than the actual cost of repairs; morover owing to inevitable delays resulting from conflicting demands for tools, labor, or material, the period during which an engine or car is out of commission is considerably greater than that required by the actual labor involved. It is, consequently, of the utmost importance that full advantage be taken of every possible means, consistent with good workmanship, whereby the interruption to traffic may be reduced. In fact rapidity of operation is second only to economy and reliability.

The constantly increasing demand from many of the largest and most progressive railroads, for electrical shop equipment, is indisputable evidence that the experience of the last twenty years has proven the superiority of motor drive for such service. The enormous expansion of railroad systems and the remarkable growth of industrial enterprise, as a natural sequence, has been accompanied by a corresponding increase in the capacity and weight of rolling stock. This in turn has necessitated a continuous increase in extent of Railway repair shops and the size of machine tools. The factors of prime importance in this development have been the introduction of high speed steel and the adjustable speed electric motor.

Successful Operation.

The success of any motor applications depends entirely upon a thorough appreciation of the service conditions and the intelligent selection of a motor of suitable design. The motor must meet the requirements of the machine to be driven, indiscriminate recommendations of "a motor," are almost invariably responsible for any dissatisfaction arising from the adoption of electric drive. The numberless combinations of mechanical forms, H. P. capacities, and speed characteristics, permit an efficient design for any specific set of conditions, and in this fact, is found both the strength and weakness of motor drive. The careless application of a motor under conditions not anticipated in its design, may lead to continual annoyance and expense, whereas a little study of the probable demands would have resulted in the selection of the right motor and thoroughly satisfactory operation. Motors ranging from 1/20 H. P. up to the largest size required to meet any possible demand in railway shops, are in standard production, while new designs, to meet new conditions, are constantly being developed.

Flexibility of Service.

With electric drive the location of the power house is no longer a factor of vital importance in laying out the plant. It may be located at any convenient point without reference to direction or distance from the applied power. Railroad repair shops usually include a number of widely scattered buildings each of which contains power driven machines, which with mechanical transmission often makes the problem of power distribution very complex. The layout of the plant must be such that repairs on rolling stock can be effected with greatest economy and least delay, and at the same time, power must be efficiently supplied wherever needed, even though the extreme points of application are thousands of feet apart. If engines are used as prime movers, separate boilers must be used, or steam from a central boiler plant must in many cases be transmitted to them through long pipe lines, with consequent condensation and loss of pressure. Either method is expensive and requires a considerable number of skilled attendants. The flexibility of electric drive is one of its greatest advantages, not only for the freedom it allows in location of power house, but also, because of effective arrangement of individual machines which it permits, and the ease with which alterations or extensions can be made. The increasing size of engines and cars, and the introduction of new machine tools sometimes make it necessary, or at least very desirable, to rearrange a part of the machines. Motor drive permits such

Interior Smoking Room, Western Pacific Steel Cars.

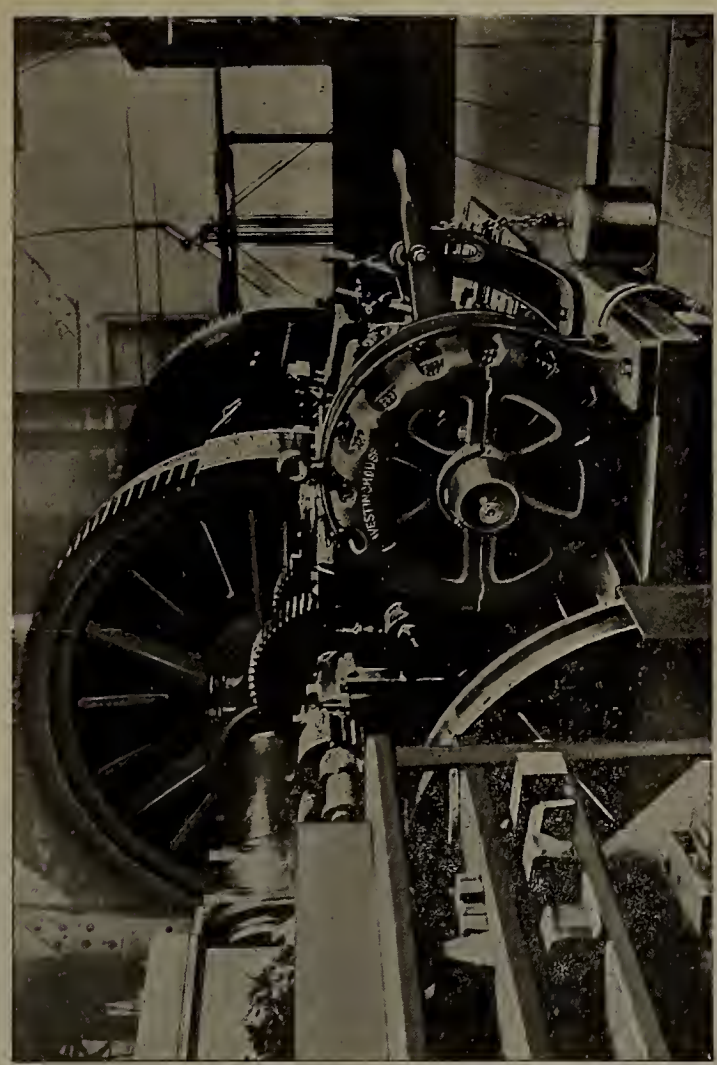

Westinghouse 40-H.P. Induction Motor Geared to Driving Wheel Lathe.—Lehigh Valley Shops, South Easton, Pa.

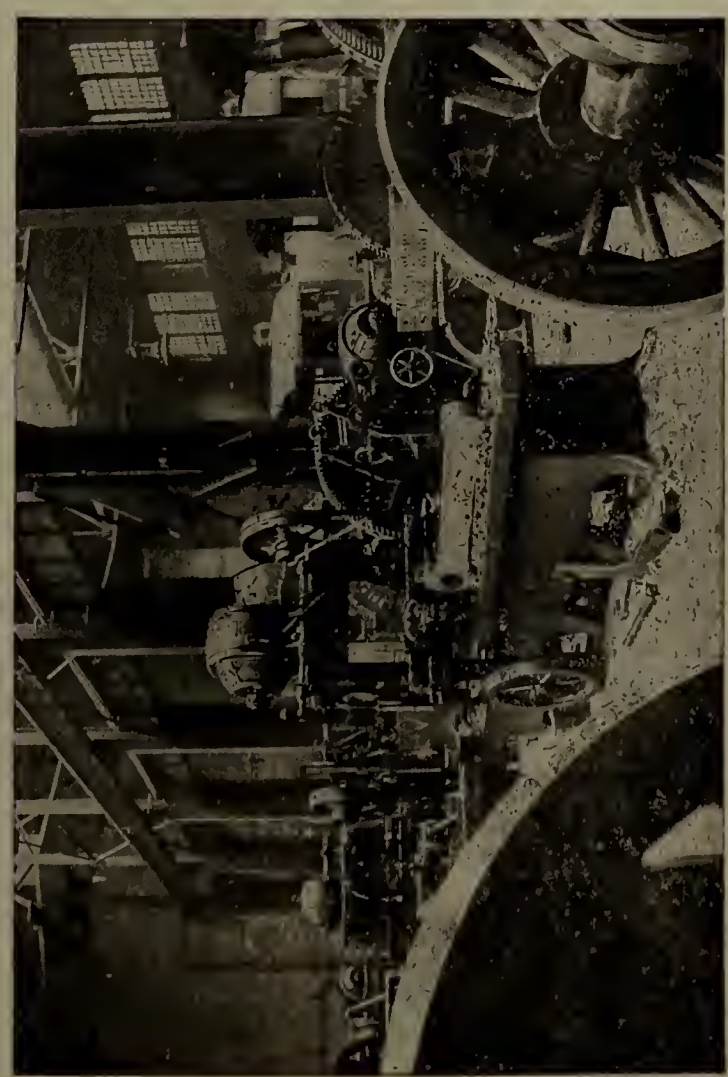

Oregon Short Line Shop at Pocatello—Planer and Driving Wheel Lathes Equipped with Direct-Current Motors.

changes with the minimum expense and interruption of service. When electric power can be purchased the change from line shaft to motor drive can best be effected by superseding the more wasteful drives first. Additions to the existing equipment can be always made at small cost, since the necessary conductors may readily be installed without loss of time or erection of costly supporting structures.

Overtime.

In shops where a large percentage of the work consists of repairs, a very considerable amount of overtime must be expected. Such work is always expensive because of the extra labor charge, and doubly so, when long line shafts and numerous belts must be kept running in order to transmit power for one or two machines only.

Portable Tools.

The extreme of flexibility is found in the self contained portable machine tool ranging in size from the small electric hand drill to the largest power driven shapers, drills, boring mills etc. The economy of time and labor as well as of power, resulting from the use of such tools is very great, particularly when the castings machined are large enough to permit the use of several tools simultaneously. The transmission losses with motor drive are practically negligible when the machines are in productive operation and entirely eliminated when the machines are idle. Furthermore, with the transmission losses reduced to a negligible quantity, power is used only in proportion to the useful work done.

Flexibility of Control.

Motor driven machines can not only be started and stopped from remote points, but also by means of automatic devices as well. Air compressors and pumps, discharging into storage tanks, can be arranged to stop or start when predetermined pressures or levels are reached, with practically no attention other than occasional inspection.

Speed Control.

Of all the many advantages of motor drive, the remarkable possibilities of speed control offered by standard types of motors makes the strongest appeal to users of machine tools. Motors may be designed for operation either at nearly constant speed over a wide range of loads, or at any one of several constant speeds, adjusted at will by the operator. In general, machines employed in the wood working shop are driven by constant speed motors while many of the power tools in machine shops require adjustable speed motors. Perfect speed control and the positiveness with which the most exacting demands are met, have contritbuted very largely to the success of the electric drive.

In the operation of those machines which require absolutely constant speed, the uniform rotative torque of the motor may be applied directly to the driven shaft, insuring a constancy of speed and accuracy of machine work impossible to maintain with belts which under heavy loads invariably slip and stretch. With other machines requiring a frequent adjustment of speed as the operations progress, a simple movement of the controller mounted on the tool carriage or elsewhere within easy reach of the machinist, is all that is necessary to vary the speed within the predetermined limits. No perceptible time intervenes between the movement of the controller and the corresponding variation in speed. The speed changes depend only upon the amount of resistance inserted or cut out of the shunt field circuit at each step of the controller, consequently they may be made as small as the best operating conditions for any particular class of work requires. Furthermore since the variation is readily accomplished without stopping the machine, the operation at the most efficient speed is the natural and preferable course. Experience has shown that with belt drive and mechanical speed changing devices the incon-

venience of shifting belts often results in loss of time due to continued operation at inefficient cutting speeds.

Three methods of obtaining adjustable speed control with motor drive have been employed. (1) multi-voltage armature control. (2) double commutator motors with series-parallel control, (3) shunt field control in conjunction with 2-wire single voltage, or 3-wire balanced voltage distribution.

The multivoltage system with armature control admits of a wide total variation in speed, but with a relatively narrow range of speed at constant h. p. output; the numerous conductors and complicated generating plant required are vital objections to the extended use of this system, and it is not being used to any extent at the present time.

The double commutator motor gives two speeds with high efficiency of operation, (1) low speed with the armature windings in series and (2) high speed with armature windings in parallel. Other speeds are obtained by varying the amount of external resistance in series with the armature windings. This system also is open to the objection that the output is proportional to the speed.

The third method of control by varying the shunt field possesses two very desirable characteristics: 1st low cost and extreme simplicity of the controlling device due to the small current handled and 2nd the possibility of obtaining increased speed with diminished torque, at practically constant efficiency. The regulation is excellent; the change in speed from no load to full load with constant field, being very slight. These features are of special importance in the operation of machine tools, or in similar service where the torque and speed must be constant for any single adjustment; the h. p. remaining practically constant throughout the entire range of operation, while the torque varies inversely as the speed for any readjustment. In general for such service a shunt or compound motor with 3-1 field control operated from a 3-wire system thus giving a total variation of 6:1 with the controller arranged for 12 per cent. to 14 per cent. increments in speed for each step, is most satisfactory.

The following results were obtained from tests on a 16" engine lathe, (1) belt driven, (2) motor driven. The open belt speeds were 523, 293, 178 & 107 r. p. m.; the back gear speeds were 57, 32, 19 & 12, while the motor drive was arranged for approximately 6 to 1 speed variation with increments of 14 per cent. on each step of the controller. Tables No. 1 and No. 2 give respectively for both mechanical and electrical drive, the spindle speeds corresponding to a maximum safe cutting speed of 40 ft. per min. for different radii, and also the radii and cutting speeds which obtain just before each increase in speed can be safely made.

Table I—Mechanical Drive.

R. P. M.	In Radii	Max. Cut. Spd. ft. per min.	Cutting Speed Minimum.	Mini. for cut 10" long.
12	6.37	40	....	....
..	4.02	..	25.2	41.6
19	4.02	40	....	....
..	2.39	..	23.8	20.3
32	2.39	40	....	....
..	1.34	..	22.4	15.6
57	1.34	40	....	....
..	....	..	....	8.77

Table II—Electrical Drive.

12.0	6.37	40	....	....
....	5.58	..	35.2	41.6
13.7	5.58	40	....	....
....	4.90	..	35.2	36.2
15.6	4.90	40	....	....
....	4.32	..	35.2	32.0
17.7	4.32	40	....	....
....	3.78	..	35.1	28.2
20.2	3.78	40	....	....
....	3.32	..	35.1	24.7
23.0	3.32	40	....	....
....	2.92	..	35.2	21.7
26.2	2.92	40	....	....
....	2.55	..	35.0	19.1
30.0	2.55	40	....	....
....	2.23	..	35.0	16.6
34.2	2.23	40	....	....
....	1.96	..	35.1	14.6
39.0	1.96	40	....	....
....	1.72	..	35.1	12.8
44.5	1.72	40	....	....
....	1.50	..	34.9	11.2
50.7	1.50	40	....	....
....	1.32	..	35.2	9.87
57.7	1.32	40	....	....
....	1.16	..	35.1	8.66
65.7	1.16	40	....	....
....	1.02	..	35.1	7.62
75.2	1.02	40	....	....
....	....	..	....	6.65

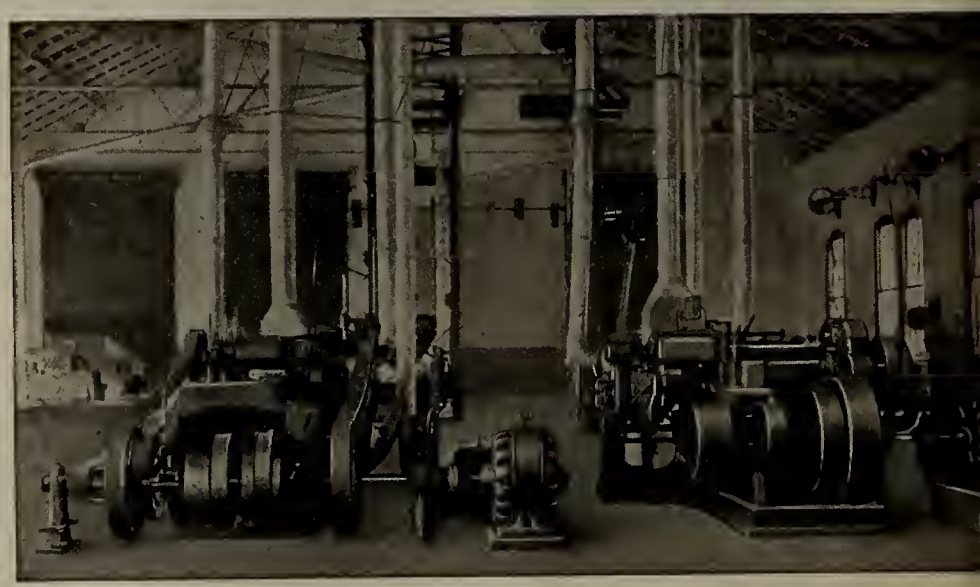

Westinghouse 30-H.P. Induction Motors Coupled to 10-in. Planer and 12-in. Moulder, Atlantic Coast Line, Waycross, Ga.

Curve No. 1 shows graphically the saving effected by motor drive due to the smaller speed increments. With belt drive and cone pulleys this speed must be allowed to drop to 22½ ft. per min. as the diameter of the work diminishes, before shifting to the next higher step, in order not to exceed the safe cutting speed of 40 ft. per min. With motor drive the speed need fall only to 35 ft. per min. before "notching up" again to maximum rate. In other words, for radii 1.3, 2.4 and 4.0 in. the deviation from maximum safe cutting speed when using cone pulleys is from 37½ to 40 per cent, while with motor drive it is but 12½ per cent, and, if desired, might be made even less.

Curve No. 2 which is obtained from the preceding curve shows the relative time required, by both belt and motor drive, to complete a longitudinal cut of given length on cylinders of different radii. Assuming a cylinder 10 ins. long with feed of .02 in. per rev. it is evident that 500 r. p. m. will be required to machine the entire length. With mechanical drive, assuming 40 ft. per min. as safe cutting speed, the maximum allowable speed of rotction with 6.37 in radii will be 12 r. p. m.; this speed cannot safely be increased until the radii has been reduced to 4.02 in., so that the time required for a complete cut 10 in. in length, on any radius between 6.37 in. and 4.02 in., will be 41.6 min. Similar calculations for other cone pulley steps show that the maximum saving resulting from electric drive in this particular case occurs when the cylinder radius is 2.39 in. The time required by mechanical drive is then 26.3 min., and by motor drive 16.6 min. per cut or a saving of 36.9 per cent in time due to

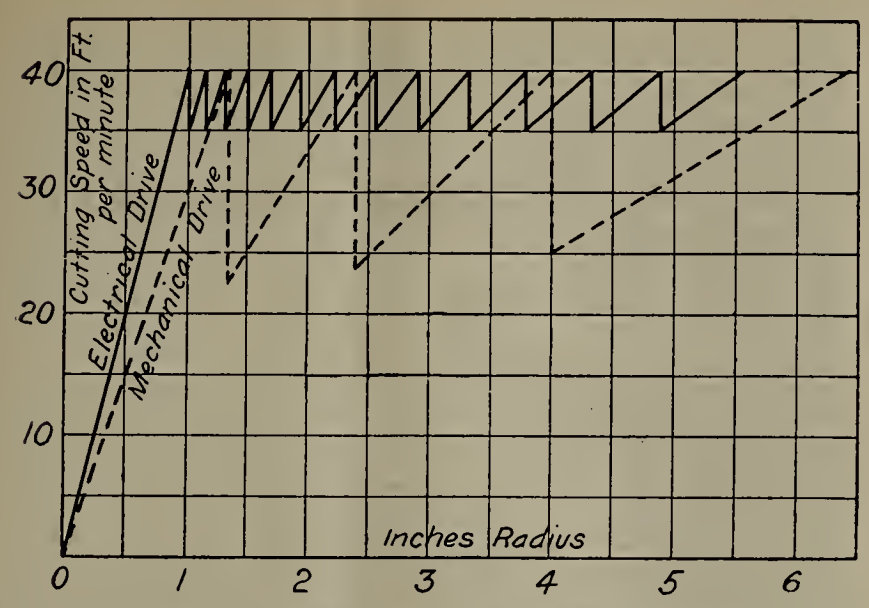

Curve No. 1.—Electrical Drive in Railway Shops.

the smaller increments of speed obtainable with motive drive.

Lower Operating Charges.

Motor drive reduces the productive costs, both directly and indirectly. In many shops, particularly in large cities, the rental value of floor area is very high and space economy is most important. Motor-driven machines require less space than when belt driven, in other words a greater number of machines can be installed in a given area, thus increasing the output and reducing the overhead charges per square foot proportionately. The charge against any power-driven machine is far greater than the corresponding labor charge for any piece of work.

For example, assuming the cost of a 24-in. engine lathe @ $1,000—

Interest @ 5 per cent	$ 50.00
Depreciation @ 10 per cent	100.00
Floor space actual, sq. ft. 180	
Floor space, contingent, sq. ft..... 36	
Floor space, total, sq. ft.....216	
Total floor space @ $1.00 rental value	216.00
Oil, waste, repairs, tools, crane service, etc	34.00
The total yearly charge is	$400.00
The daily charge based on 300 working days becomes	$1.25

As the average actual operating time for any machine tool rarely exceeds 33 1/3 per cent of the working day, the hourly charge based on a nine-hour day becomes 42 cents, to which must be added 15 cents labor charge, making a total of 57 cents. Referring again to Curve No. 1 it is evident that motor drive increased the late capacity by approximately one-third so that the cost of operation is reduced by 25 per cent of the machinist's wages. Owing, however, to the reduction of the hourly overhead charges, the equivalent of practically the entire labor charge may often be saved by motor drive. If by careful supervision and greater facility of operation due to motor drive, the tool can be kept in actual service 4½ hours per day, the hourly overhead charge becomes 28 cents, which with the labor charge of 15 cents, makes a total charge of 43 cents instead of 57 cents formerly incurred.

Load Factor.

The plant load factor may be defined as the ratio of the average power consumed to the total power required for operating all connected machines simultaneously at their rated load. Assuming that every machine when fully loaded is performing useful work at its highest efficiency, it is evident that a high load factor indicates a high output per unit cost and at the same time a low overhead charge and power loss. Wherever this assumption holds true, motor drive affords the best possible means of securing a high productive efficiency, since, as noted above, power is required only when the machines are in productive operation, and then only in proportion to the useful work performed. Tests extending over a long period show that the average load on a machine tool is rarely more than 70 per cent. to 80 per cent. of its normal capacity, so that if it is in operation one-third of the working day the load factor will be about 25 per cent. to 30 per cent., that is, the maximum available power may at times be required, yet an average of more than 25 per cent. to 30 per cent. of the normal connected load can not be used. A thorough appreciation of the probable load factor is essential in determining the most efficient arrangement of machines and type of drive.

Friction.—Motor drive practically eliminates the losses in transmission due to friction of line shafts and heavy belts. In many mechanical transmissions these losses amount to from 25 per cent. to 40 per cent. of the total power required for operating the plant, and in some instances as much as 80 per cent. is wasted in this manner.

Individual and Group Drive.—Two methods of applying electric motors are in general use, namely group and individual drive. In the group drive a motor of half the aggregate h. p. required by the entire group, will usually suffice owing to the fact that rarely or never are all the machines fully loaded at one time. As a rule, the direct application of a motor to each tool is the most economical, flexible and wholly satisfactory method. The choice should, however, always be determined by local consideration.

Improved Operating Conditions.—The general operating conditions in the shops are greatly improved by motor drive. The absence of belts and overhead shafts results in less dirt and noise, and better illumination, whether natural or artificial. The likelihood of injury to the operator, or machine, or of interruption to service due to breaking belts, is eliminated. These advantages may be considered of doubtful value, but conditions inevitably affect the quality of workmanship. A cheerful workman in a reasonably clean, well-lighted and well ventilated shop will accomplish more and better work in a given time than under adverse conditions. It is certainly sound economy to provide conditions which will produce best results.

Maintenance.—The charge for attendance and general maintenance is less for motor drive than for any other system. Service wires properly installed require no attention, nor do they depreciate in value. The bearings, brushes, and commutator of direct current motors, and the bearings alone of induction motors are the only wearing parts. The bearings are self oiling and commutators last for years.

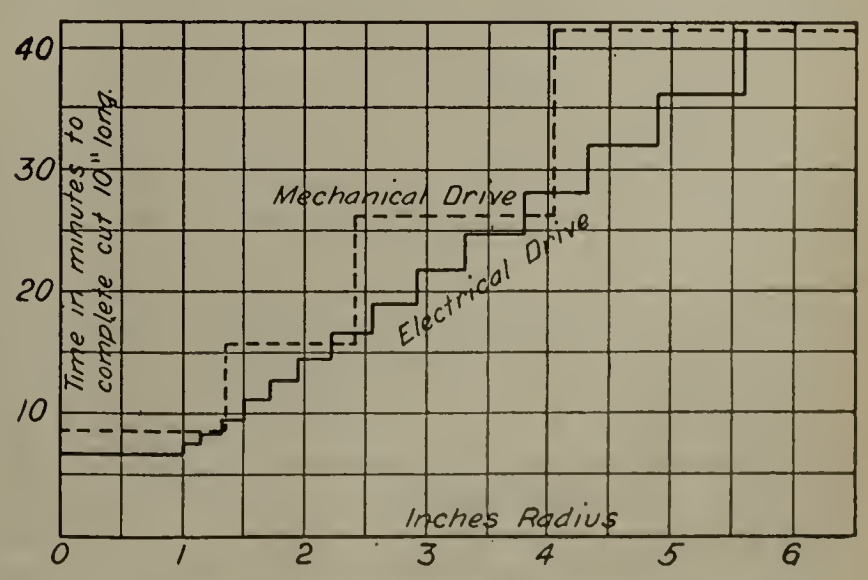

Curve No. 2.—Electrical Drive In Railway Shops.

Performance.

It is self evident that the best machines and the most complete equipment, installed under the most approved conditions, will be of little value unless it is kept running and its tools cutting, yet in many instances, owing to lack of suitable means of determining actual hourly service conditions, machine tools are operated far below their highest efficiency. Electric motors have a high overhead capacity and a higher efficiency over a wider range of loads than any other form of prime mover. The efficiency of electric transmission does not change with time, consequently motor drive in conjunction with a Westinghouse Graphic Recording Meter, affords an easy means of determining the mechanical efficiency and operative conditions of any motor driven tool. The movement of the pen and consequently the record traced on the moving paper bears a fixed relation to the power consumed. With the same conditions prevailing, the curves for identical pieces of work should be treated practically coincident. If they are not, any departure from standard performance may be readily detected, whether due to difference in material, sharpness of tool, unsteady power supply or variation in sequence or manner of conducting the several operations involved. A low-power period of undue length, may reveal an unsuspected loss of time for both machine and operator, due, perhaps, to delay in obtaining service of the traveling crane for some new adjustment of the work in hand. The obvious remedy in such cases is improved crane service. An unusually high curve may indicate excessive friction losses due to heated bearigs or broken parts, or again it may if carefully investigated, prevent serious injury to polyphase motors from abnormal current resulting from an accidental open phase. The source of trouble may be so far removed from the point where it becomes evident that except for the graphic meter it might not have been detected.

For determining productive costs such records are invaluable. They show at a glance for any machine, the period of productive operation, the percentage of its rated normal load, the time required for grinding tools, changing or readjusting work and finally, to what extent the workman is taking advantage of the possibilities of the costly device entrusted to his care. These records are also of great service when extensions are contemplated in determining the capacity of motors required to operate any particular class of machines.

Special Applications.

Aside from the foregoing advantages of electric motors in the machine shop proper, there are many other practical applications in the wood working shop, blacksmith shop, boiler shop, tank shop, pipe shops, etc., and also for transfer, drop and turn tables, motor driven pumps, charging sets for train lighting storage batteries, both inside and outside jib and traveling cranes, etc. One of the most useful and economic labor saving devices in railway shops for which the electric motor is peculiarly suitable is the locomotive drop-table. In a drop-table used by the Pennsylvania, a high torque Westinghouse induction motor is located on the floor, at the extreme end of the pit. The table moves approximately two feet per minute when the motor is at full speed. The nature of the service is such that the starting torque must be very high as compared with the normal running torque, a difficult requirement for any except electric motor drive. A locomotive is run on to the table over the pit, blocked in position, the drivers disconnected and together with the table lowered sufficiently to clear the pony trucks. The drivers are then rolled forward beyond the locomotive and again lifted to the floor level from which point they may be easily rolled into the machine shop. Such an arrangement may be employed where the expense of installing an overhead locomotive crane would be prohibitive. The great saving of time and labor is obvious to any one familiar with repair shop practice.

Following are lists of Westinghouse constant and variable speed types of motors:

Constant Speed Type Motors, Group Drive By 50 H. P.

16″ engine lathe.
24″ engine lathe.
24″ pillar shaper.
Friction drill.
36″ x36″ 10′ planer.
36″ x 36″ x 8′ planer.
32″ x 32″ x 8′ planer.
20″ engine lathe.
18″ engine lathe.
16″ engine lathe.
24″ engine lathe.
Cylinder boring machine.
No. 17 Landis grinding machine.
48″ vertical boring machine.
36″ upright drill.
28″ upright drill.
36″ engine lathe.
30″ engine lathe.
Two Fox turret lathes.
86″ vertical boring machine.
Duplex emery grinder.

Variable Speed Motor-Driven Machines.

One 7½-h.p. motor operating vertical miller for side rods.

One 70-h.p. and one 6-h.p. motor operating 90″ boring mill.

One 20-h.p. motor operating axle lathe.

One 7½-h.p. motor operating crank pin lathe.

One 40-h.p. motor operating 90″ driving wheel lathe.

One 25-h.p. motor driving truck tire lathe.

CONSOLIDATION TYPE LOCOMOTIVES, NASHVILLE, CHATTANOOGA & ST. LOUIS RY.

The Nashville, Chattanooga & St. Louis Ry. has recently placed in service ten freight locomotives of the consolidation type. These engines are built by the Baldwin Locomotive Works and are the heaviest thus far completed for this road by the builders. With 22 in. x 30 in. cylinders, 56-in. drivers and a steam pressure of 200 lbs., they exert a tractive force of 44,100 lbs. As the weight on drivers is 187,750 lbs. the ratio of adhesion is 4.25. The boiler provides 259 sq. ft. of heating surface per cu. ft. of cylinder volume, and the ratio of grate area to heating surface is as 1 to 62. The weight on the driving wheels is utilized to excellent advantage, and the boiler capacity is ample for comparatively slow speed service. In its general proportions, the design represents the best practice for heavy consolidation locomotives.

The steam distribution is controlled by balanced slide valves, driven by Walschaerts motion. The valves have an outside lap of ⅞ in. and are line and line on their exhaust edges; they are set with a maximum travel of 5½ in. and a constant lead of ¼ in. The gear is designed with all moving parts in the same vertical plane and is simple in construction throughout. The link blocks are down when running ahead.

These engines have cast steel driving and truck wheel centers, and forged steel main and side rods. The pistons are of the built-up type, with cast steel heads and followers, and cast iron snap rings carried on a bull ring. The driving boxes are of steeled cast iron.

The boiler is straight topped with its center line 9 ft. 9 in. above the rail. The dome is 15⅞ in. high, and is flanged from a single piece of ¾-in. plate. The mud ring is

sloped toward the front, and the throat has a depth of 22 in. measured from the under side of the boiler barrel. This provides ample room between the grates and bottom row of tubes. The smoke box contains a low single nozzle, and the stack, which is 19 in. in diameter at the choke, has an internal extension. In accordance with the railway company's practice, the deflecting plate is perforated with narrow horizontal openings. No adjustable diaphragm is used with this arrangement.

The tender is carried on "Standard" solid rolled steel wheels. The trucks are of the arch bar type, with cast steel bolsters and triple elliptic springs. The tender frame center sills consist of 15-in. channels, and the side sills of 10-in. channels. Wood bumpers are used front and back.

This is a straight forward design of consolidation engine, which in its general arrangement and details, closely follows previous locomotives built for the Nashville, Chattanooga & St. Louis Ry. The table contains the principal dimensions of the new engines.

Following is a table of dimensions, etc.:

Gauge	4 ft. 8½ ins.
Cylinders	22x30 ins.
Valves	Balanced Slide

Boiler.

Type	Straight
Material	Steel
Diameter	80 ins
Thickness of sheets	13/16 in.
Working pressure	200 lbs.
Fuel	Soft Coal
Staying	Radial

Fire Box.

Material	Steel
Length	120 ins.
Width	66 ins.
Depth, front	78½ ins.
Depth, back	69¾ ins.
Thickness of sheets, sides	5/16 in.
Thickness of sheets, back	⅜ in.
Thickness of sheets, crown	7/16 in.
Thickness of sheets, tube	½ in.

Water Space.

Front	5 ins.
Sides	4 ins.
Back	4 ins.

Tubes.

Material	Iron
Thickness	No. 11 W. G.
Number	397
Diameter	2 ins.
Length	15 ft. 6 ins.

Heating Surface.

Firebox	214 sq. ft.
Tubes	3,204 sq. ft.
Total	3,418 sq. ft.
Grate area	55 sq. ft.

Driving Wheels.

Diameter, outside	56 ins.
Diameter, center	49⅝ ins.
Journals, main	10½x13 ins.
Journals, others	9x13 ins.

Engine Truck Wheels.

Diameter, front	33 ins.
Journals	5½x12 ins.

Wheel Base.

Driving	16 ft.
Rigid	16 ft.
Total engine	25 ft. 4 ins.
Total engine and tender	58 ft. 1 in.

Weight.

On driving wheels	187,750 lbs.
On truck, front	18,600 lbs.
Total engine	206,350 lbs.
Total engine and tender	340,000 lbs.

Baldwin Consolidation Locomotive, Nashville, Chattanooga & St. Louis Ry.

Tender.

Wheels, number	8
Wheels, diameter	36 ins.
Journals	5x9 ins.
Tank capacity	6,500 gals.
Fuel capacity	12 tons.
Service	Freight

PREVENTION OF ACCIDENTS.

The recent movement of the Chicago & North-Western Ry. in effort to decrease the number of preventable accidents has attracted attention in foreign lands. The following is taken from "Indian Engineering," published in Calcutta:

A movement inaugurated by the Chicago & North-Western Ry. a year ago will be watched with interest by railways all over the world, as it appeals to two instincts common to humanity in general, and by inference to the human side of all railway corporations. The admission that it is under the direction of the claim department of that railway unfortunately creates a suspicion that in this case the more sordid of the two instincts prompts the movement; but as the desire to save its money need not necessarily exclude the desire to save the lives of its staff, we shall give it credit for acting from both motives, looking to the end achieved,

and sincerely wishing that others may follow its good example. This railway then, finding it was losing the services of a large number of its employes through accident, and that in consequence it was not only being deprived of the services of valuable men but was also having to pay out large sums in compensation, took careful stock of its casualty list and discovered that an unconscionably large number were due not to "the act of God," as profane practice puts it, but really to carelessness, thoughtlessness and a sublime contempt of railway regulations. Five-sixths of the accidental deaths and fourteen-fifteenths of the injuries were so brought about, the painful feature being that the casual action of one man often brought about the death or damage of several others. And thus came into existence the company's so-called "Safety First" movement. First a lecturing campaign was undertaken through the entire system. Division officers were brought together, the position was explained to them and their co-operation in a general movement was secured. Next the men were lectured and made acquainted with the fact of the great frequency of accidents, their causes, the results to themselves, in how great a measure the responsibility for them rested with themselves, and how easily they themselves could put a stop to them. The primary education of the whole staff being thus completed, the organization itself was launched. On each division was formed a "Safety Committee" comprising an engineer, fireman, conductor, brakeman, trackman, station agent and switchman, whose duty it was to keep a vigilant eye on others, check carelessness when they saw it, give instructions as to the safe way to proceed with their duties, and above all things insist on a due observance of all safety regulations. Similar committees were formed also for controlling operations in the shops and round houses. Each committee meets once a month to discuss what it has noticed and effected, and to send up proposals to division officers which require their sanction before amendment can be effected. Furthermore, special trains are run over the various divisions, for the various committees who, accompanied by some of the general officers, make detailed inspections along the line, form themselves into sub-committees for reporting on special points, and at the end of the trip consider and dispose of such reports. Each member of a committee wears a distinguishing button and has his name posted up on a list hung in round houses, shops, etc., so that he may easily be found by an employe who has a suggestion to make, or who may need his invention in a case of threatened danger. The employes' committees report to the division committees, who, in matters beyond their powers, report to a central committee consisting of two general superintendents, an engineer of maintenance, an assistant superintendent of motive power and machinery, a supervisor of motive power and machinery, a trainmaster of the freight terminals, an assistant superintendent of the car department and the general claim agent, the last of whom is chairman of the committee. This committee meets and disposes of all pending business once a month. The scheme has been in working for four months only and has already effected a notable diminution of accidents, to the extent of 15 per cent in the case of fatal accidents and 10 per cent in the case of injuries. The movement is popular among the workmen and has been observed to establish better relations between officers and men than have prevailed hitherto.

AN INTERESTING LOCOMOTIVE MODEL.

The mechanical departments of American railroads have been told how to operate their shops more efficiently by a lawyer. It now appears that a physician can show motive power officials how to design better locomotives.

The accompanying illustration shows a model of a compound on the Mallet principle built after five years of work on the plan, by D. N. Jones, M. D., who is in charge of the Gaylord Hospital at Gaylord, Minn.

The engine is complete in detail and is run on gasoline as a fuel. The gasoline is burned in a Giant brazer. The trucks are pivoted and the engine will make the shortest curve allowable with the rigid wheel base of one set of drivers.

It appears that the doctor has bored his cylinders all of the same size, that is 1¼ ins., with a stroke of 3 ins., in which case, of course, his low pressure cylinders are of no benefit. It is stated that the locomotive rides with the ease of a coach and works very satisfactorily.

Following is a table of dimensions, etc.:

Gauge	5¾ ins.
Length of engine and tender	8 ft. 4 ins.
Length of boiler	5 ft. 6 ins.
Length of tender	3 ft. 1 in.
Width of cab and tender	1 ft.
Height to top of stack	1 ft. 8 ins.
Diameter of boiler	8 ins.
Diameter of single flue	4 ins.
Drive wheels	8 ins.
Axles	¾ in.
Truck wheels	2½ ins.
Tender wheels	4 ins.
Cylinders	1¼x3 ins.
Boiler capacity, water	8 gals.
Steam pressure	225 lbs.
Weight of engine and tender	400 lbs.

The International Ry., Buffalo, N. Y., has ordered 35 prepayment street cars from the J. G. Brill Co.

The Havana Central has ordered 360 box cars from the Standard Steel Car Company.

The Illinois Traction System ordered 12 trailer cars from the St. Louis Car Co.

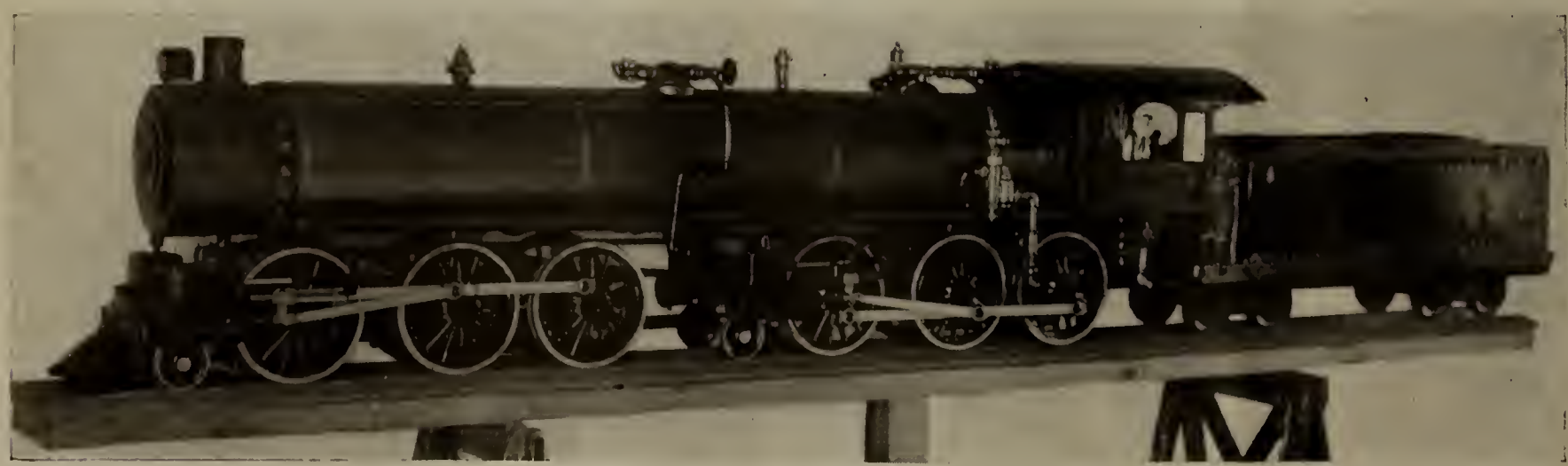

Working Model of Mallet Type Locomotive, Built by a Minnesota Physician.

Development of Locomotive Tubes and Their Treatment*

The tube industry owes much to the railroads for its development; in fact the invention of lap welding may be traced to the necessity which arose on the building of George Stevenson's first locomotive for a tube which would be safer and stronger than the butt welded tube, the only one made at that time. Since Stevenson's day the manufacture of locomotive tubes has increased in quantity and quality as the demands of railroad service became more exacting and the whole tubular industry was no doubt favorably affected thereby. Seamless steel tubes were introduced about 1886 and established a new standard of strength and ductility and endurance under many conditions of service. Later on a satisfactory grade of soft steel was produced which could be lap welded like charcoal iron and this also has been much improved, so that we now have practically three classes of tubes for locootive service—charcoal iron (lap welded), steel (lap welded), and seamless steel. Charcoal iron formerly was made from special grade of pigon iron made in a small blast furnace using charcoal fuel. The product of this furnace was charged into the refinery where about one-half of the impurities were oxidized and fluxed away, the metal being subsequently treated in lots of 300 pounds or so in a slightly modified type of the old catalan forge with charcoal as fuel. The use of so much charcoal has necessarily been stopped and in many other respects the manufacturer of charcoal iron for tubes has of late years been considerably modified. Of these changes we are not in a position to speak, for, as it was evidently impossible for obvious reasons to continue the manufacture of charcoal iron strictly along the old lines, we abandoned the making of charcoal iron tubes about two years ago in favor of lap welded and seamless steel, which had by that time been proved a fit substitute and in some respects decidedly superior to the older material.

You all understand, of course, that when we speak of steel in this paper it refers more to the method of manufacture than the finished product, as the steel used in the manufacture of tubes, as a matter of fact, is a purer form of iron than that made by the charcoal process, and like the older metal cannot be tempered.

A special grade of Bessemer steel was at first used in the manufacture of lap welded tubes, on account of its superior welding quality, but later on had to be abandoned as under some conditions it was found to develop brittleness in the beads after the tubes had been in service some time. The substitution of basic open hearth steel low in carbon and with less than .05% phosphorus and sulphur has been found after more than two years' trial to entirely do away with any tendency of this kind, and as now made there is little difficulty in securing a strong weld with this steel. Seamless and lap welded steel tubes are now made from practically the same grade of soft basic open hearth steel.

Resistance to Corrosion.

The manufacturer should furnish a tube in the best possible condition to withstand corrosion and pitting, that is, the metal should be as uniform in composition and density as it is possible to make it. Much can be done to lessen the tendency to pitting by proper attention to the making of steel and the way it is worked. We have been experimenting on this problem now for several years and have gone to considerable trouble in the matter of testing and inspection of material and in the process used for manipulating the steel, so as to produce a tube which will resist corrosion as well as iron can be made to do so, and judging from the reports of comparative service tests which have been received, steel so made is, in this respect, at least the equal of the best charcoal iron.

*From a paper read by F. N. Speller, metallurgical engineer, National Tube Co., before the Pittsburgh Railway Club, April 28, 1911.

Cooling Tables of Boiler Tube Furnaces in McKeesport Mills of National Tube Co.—This is the Largest Mill Building of Steel Construction in the World.

After all, however, the solution of this problem is largely in the hands of the user. Iron or steel will corrode in spite of anything that can be done if certain material is in solution in the water, particularly dissolved oxygen or carbonic acid. By the removal of these harmful agencies corrosion may be reduced to practically nothing. It is generally understood nowadays that water conditions have everything to do with corrosion, and the simplest solution of the problem is to treat the water with the object of making it as harmless as possible. The development of the modern tube to withstand corrosion and the treatment of water have together practically eleminated this trouble, so that it is rarely the case that tubes fail nowadays through pitting.

Leaking in the Flue Sheet.

The construction and handling of the engine has so much to do with the trouble experienced from leaky flues that it is diffiucult to determine how much, if any, of the responsibility for this should be placed on the tube material. If railroad engineers will tell us what qualities are required in the tube to make it hold tight in the flue sheet, we will be glad to follow their suggestions as closely as possible. At the present time the steel tube is made as stiff as possible consistent with the best welding quality and ability to stand up successfully under expansion and beading in the tube sheet.

Strength and Ductility of Material.

The tube should be of such quality as to stand repeated tightening in the flue sheet without cracking or showing undue evidence of fatigue, nor should these weaknesses develop during the life of the flue in service. The material found best adapted to give these properties is a special grade of soft open hearth steel carrying not over .05% phosphorus or sulphur.

Weldability.

The quality of the metal and method of handling are equally important in safe ending. Soft steel has been found somewhat harder to weld than charcoal iron, but it has been greatly improved in this respect. The necessity for a good welding quality steel is of first consideration in making locomotive tubes so that they may be easily safe ended, and this point has received a great deal of study, especially in the manufacture of lap welded tubes where it is, of course, one fo the first essentials to manufacture. Charcoal iron carries considerably more impurities than soft open hearth steel, and these impurities form a self-fluxing mixture which facilitates welding. Railroad specifications have been so tightly drawn on comoposition in some cases as to work against the production of a good quality of steel for locomotive boiler tubes by calling for unnecessarily low phosphorus and sulphur. There is now very good reason to think that a mistake has been made in this direction and that the general welding quality of the steel would be much improved, and the steel at the same time would lose nothing in other respects, if the maximum phosphorus and sulphur limits were both raised to .05%. With producer gas, now generally used of necessity, it is a very difficult matter to keep the average sulphur in the heat below .035% and in order to remove this sulphur in the open hearth furnace the steel has to be held and worked in such a way as to frequently leave it dry and difficult to weld.

Before the steel can be welded in practice a fluid cinder must be formed on the surfaces which are to be united. If the metal is heated too far above the point at which this cinder should flow, it will be burned and destroyed. We endeavor to have the range of temperature between the cinder-forming and burning points in the steel as wide as possible so as to assist in lap welding and give the largest margin of safety in safe ending. Considering the variety of the requirements it seems to us that the composition of the metal should be left largely to the discretion of the manufacturer so far as is consistent with a certain specified standard of physical quality in the finished tube. We frequently go to the trouble of rephosphorizing for the purpose of improving the fluxing and welding quality of our steel.

The method of safe ending we have said has as much to do with obtaining satisfactory results as the material, but we will not attempt to lay down specific rules as to construction of the furnace and heating, for many of the practical shop men present who are welding flues every day are much more able to discuss this side of the problem. However, there are a few broad principles on the heat treatment of tube steel which should be taken into consideration. The preliminary heating of the body tube preparatory to flaring out the end should be carried to a bright orange color judging by good shop light, 1,750 degrees F. In the case of steel on steel, if the body tube is allowed to cool black after heating to this temperature and inserting the safe end the grain structure will be refined and the metal put in much better condition for the welding operation which follows. Moreover, if the preheated body tube is returned to the furnace without cooling the metal may be crystallized or burned before the safe end has been heated hot enough to weld. Should there be any considerable difference in thickness between the safe end and body tube, it is evident that there is again a risk of overheating the one before the other is sufficiently heated to weld. If the body tube is returned to the

Tests of Lap Welded Boiler Tubes.

furnace while red hot and the safe end is at the same time a gauge or two heavier, there is, of course, all the more chance of crystallizing or burning the body tube at or near the weld. Taking unnecessary risks of this kind often explains subsequent failures which should not be charged up to the flue maker.

It is not unusual for a flue welder who has never handled steel to have trouble for a few days. Remembering the above points and using his experience to the best advantage as to the condition of his furnace, the character of the flame, temperature, etc., the average man will soon be able to do equally reliable work with steel as with charcoal iron, as the experience of welders all over the country will show.

Uniformity of Material.

This is a quality which the tubes should have in a high degree, both as to physical and chemical properties. There is no difficulty as to the average steel tube nowadays stand-

ing the master mechanics' tests made on one sample out of each hundred tubes. We have, however, recently designed a machine to make the flange, crushing down, and flattening test on each end of every tube in the manner shown in one of the illustrations. This gives assurance both as to the character of the metal in each individual tube and also, in the case of lap welded tubes, as to the welding quality being satisfactory. Steel tubes are now made in one grade of material suitable for either body tube or safe-ending.

This illustration represents the National Tube Co. standard test of lap-welded steel boiler tubes. The crop end cut from each end of the tube (shown as the first tube in the picture) is placed in a specially designed testing machine.

The next piece shows this same tube compressed laterally after the first operation. The third piece in the picture shows the same tube compressed vertically with a flange turned on the top.

Particular attention is called to the fact that every lap-welded steel boiler tube receives this test on one piece cut from each end. In other words, every single boiler tube is doubly tested. This test is entirely separate from the hydraulic test, inspection test and other tests made.

Reminiscences of a Car Builder—II.

By H. M. Perry.

On a visit to Chicago to attend the first convention which the Master Car Builders' Association held there, the members were invited to visit the car shops of the Illinois Central R. R., which at that time was one of the largest car shops in the country, and as they were building a lot of box cars it was a matter of much curiosity to the car builders of the smaller roads to see their method of doing the work. These cars were the first ones that the eastern builders had seen having the sills running the whole length of the car, and it was the general opinion that this form of construction was a decided improvement.

The method of erecting these cars was something original; the bolsters were first placed on the trucks, the center and intermediate sills laid in place and bolted to the bolsters, the end sills were driven on to the tenons on the ends of the sills and tie rods running back through the bolsters were put in and tightened up.

The side sills and plates were laid on horses along side the car, the posts and braces driven into place and the tie rods tightened up, when the whole side of the car was raised up by tackle attached to the roof of the shop, and held in place while the end plates were set in position and the two sides of the car were drawn into place with cross tie rods running through sills and plates, the rafters were nailed in place and the car was ready for siding and roofing.

As this was the first time I had ever seen cars built with anything like system, and particularly cars of this design, I decided I would copy it at the first opportunity, so on my return home I immediately made a drawing of the general design of one of these cars and after awhile persuaded the master car builder to allow me to build a flat car of a similar design.

We had succeeded in getting some machinery in the shop, consisting of a surface planer, two saws, a boring machine and a jig saw, and thought we were then prepared to build almost anything in the line of car building.

About this time we had quite a serious wreck on the road, a freight car became derailed on the approach to a high deck bridge, with the result that several cars went over the abutment of the bridge, falling about forty feet down on to the bank of the river, where they were completely demolished.

One of these cars was just out of the shops of the Wason Car Manufacturing Co., and was of the new design of construction, but was so badly damaged that it was decided to burn it with the rest of the wreck, so we removed the draft gear and used the castings as patterns for our new car.

This car had two center and two intermediate sills, 5x7 ins., side sills, 5x12 ins., end sills, 5x8 ins., cross ties, 4x9 ins., bolsters, 4x12 ins., and draft timbers, 4x7 ins.

The center and intermediate sills were gained out about one and one-half inches over the bolster, the bolster being gained on the sides to take the bottom of the sills. The side sills were mortised to receive tenons on the ends of the bolster, the end sills were mortised to receive the tenons on the sills and extended from out to outside of the side sills and being one inch wider than the center sills formed a shoulder for the draft timbers.

The bolsters were trussed with two ⅞-in. truss rods, which run from the outside of the side sills up at an angle through the ends of the bolster and the intermediates and over the top of the center sills and as they were in one piece it was quite a job to get them in place. An improvement was afterwards made by using two flat straps over the top of the center sills having a loop welded in each end and bent down at an angle to hold the nut of the truss rod which runs straight from this point down to the outside of the side sills.

The truss rods on this car, of which there were two, run through the end sills up over a block on the bolsters and down under the cross ties and were in one piece from end to end, turnbuckles not being used for some few years after this time.

It is a remarkable fact that this design of car was used for over twenty years with very little change, until the introduction of the iron and steel bolsters, and the wooden cars of today are almost identical with these first cars, except in the size of the material used. The present wooden car is the outgrowth of fifty years' experience in their operation, the increase in loads, weight and speed of trains developing weak points in their construction, which were strengthened by the addition of larger and stronger material until a limit has been reached, beyond which it seems impossible to go without making a radical departure from the old design of car frame, which every car builder will concede was a mechanical failure from the beginning when they placed the draw gear below the line of the sills, although they tried to overcome the buffing strains by the use of deadwoods placed on the face of the sills, and there is no question now but what it would improve conditions in our present equipment if we would return to the old principle by taking up a large part of the buffing strains in heavy spring buffers in the center line of the sills instead of from eight to twelve inches below that point, the tendency of which is to break down the ends of the cars or tear the draft rigging away from the frame.

The builders of the modern steel cars still follow the same general design by simply replacing the wooden sills with steel shapes and it will be several years before the question is settled whether the present design is best for steel car construction or not, and if one was to decide this question, based on the enormous increase in cost of car repairs in the past ten years, he would naturally decide that some other form of construction was required.

CORROSION TESTS OF BRASS AND BRONZE.

That laboratory tests of the corrosion of brass and bronze alloys will give results closely approximating those of actual use, is stated in a paper read before the American Brass Founders' Association by William Vaughan, of Arthur D. Little, Inc., chemists and engineers of Boston. Comparative tests under

the exact conditions of service, of course, afford the most valuable and exact information, but in most instances, the expense and time involved by service tests are prohibitive. The laboratory therefore steps in with a more rapid test, and one that is nearly as conclusive.

Corrosion may be defined as the effect produced upon a metal by the combined action of air and water, with or without the stimulus provided by the various impurities in the water or in the atmosphere. These corrosive effects are explained on the basis of: (1) Chemical action alone; (2) electro-chemical action, which may be caused by stray electrical currents from an outside source or by galvanic action due either to included impurities or to the varying proportion of the different elements constituting the alloy.

The main difference between two actions is in intensity; the corrosive action itself is practically the same in both cases, unless abnormal results are produced by high current densities. Effects that take months under the first can be accomplished in six or eight hours by the second. By accelerating the chemical action by an electric current, we have therefore a comparatively simple method of determining the relative resistance to corrosion of the various metals.

This intensifying of the ordinary types of corrosive action over the pitch they reach in service conditions, has proved by comparison with results obtained under service conditions to throw a good deal of light upon the problem of what composition or alloy will offer the strongest resistance to corrosive forced under given conditions. By combining with such corrosion tests a study of the crystalline character of the alloys tested, the question of what composition will be most durable is put on a scientific and exact basis.

Discussion—Master Car Builders' Assn. Atlantic City Convention

TRAIN LIGHTING.

G. W. Wildin (N. Y., N. H. & H.): There are a number of recommendations made in that report as to certain special devices, and I would like to inquire if they are patented.

D. F. Crawford (Penna.): It is my understanding that none of the patents are still in existence on those devices.

C. A. Schrover (C. & N. W.): We have with us this morning J. D. Cartwright, of the Lehigh Valley. He is an electrical engineer and he is also the chairman of the committee on standards of the Association of Electrical Engineers, and I move that he be extended the privileges of the floor for five minutes.

(Mr. Cartwright was given the floor).

Mr. Cartwright: Before making any remarks on the subject under consideration I wish to state the interests I represent and the reason for my appearing before you today. As an individual I represent the Lehigh Valley; I also represent the Association of Railway Electrical Engineers. At a recent meeting of our Association the present report of your committee was thoroughly discussed and I am here to present for your consideration the wishes of the Association of Railway Electrical Engineers, primarily formed for the purpose of standardizing as far as possible the electrical equipment on cars. Fully realizing the importance of the subject, I hope you will bear with me for a few moments in the presentation of the subject which will be submitted to you for your consideration. I take this opportunity to thank your committee on train lighting for their hearty co-operation in embodying in their report several recommendations which have been made by our Association. We do, however, take certain exceptions to a few of these recommendations, as follows:

Sec. 1. Should be changed to include additional information not shown.

Sec. 2. The first line, after the word "used" it was suggested that there should be inserted the words "they shall be interchangeable with."

Sec. 5. After the word "car" in the first line insert the words "equip with battery boxes."

There is no necessity of putting a charging plug on an electrically lighted car that has no battery boxes in it.

Sec. 6. Should read: That each electrically lighted car be provided with two 150-ampere fuses close connected to positive and negative terminals of batteries, at battery box, before wires enter conduit leading to distributing board in car. The fuses to be arranged and placed in a strong metal box, substantially as shown on Exhibit F, and installed on car as shown on Exhibit E.

Sec. 7. Omit the word "completely" in the fourth line. Also omit the second item. We have found several instances where porters on the cars have pulled the battery switch instead of the lights witcn. The result is that all the lamps in the car have been burned out, due to the excessive voltage generated.

The sixth line should read as follows: The axle dynamo switch or fuses to control the positive armature and positive field of the dynamo.

We had considerable discussion on Sec. 10. We wish to eliminate all fuses that we can from a car, consistent with safety. It might be practicable to put a few in your armature, but do not put any in your field or both sides of your armature circle.

Sec. 11 should read as follows: The following voltages should be used:

For head end or straight storage, 64 volts (nominal).
For axle dynamo systems, 32 volts (nominal).

You will notice that we have omitted the recommendation for 30 volts for the straight storage system. On the second part we have omitted straight storage. It was not considered practicable to operate straight storage on 30 volts.

There is one typographical error which has crept into Sec. 17. In the seventh line the figure "7" should be inserted instead of the figure "8," as the dimensions for the face of the generator pulley.

At a meeting of the members of the Association of Railway Electrical Engineers, held in Washington on June 16, 1911, it was voted that the recommendations of your committee regarding interchange of electric lighted cars should read as follows: On electrically lighted cars, furnished to foreign roads, where no agreement is made, a charge of 75 cents per car per day shall be made for the use of the electric lighting equipment.

If any of the suggestions or recommendations that I have made are out of order, I would ask you to excuse my presumption, but accept the recommendations of the Association of Railway Electrical Engineers just the same.

Mr. Wildin: I would like to know whether the committee in formulating this report took into consideration the fact that some roads are being electrified, and that the charging of the batteries on the car will be taken care of while the cars are on the electric zone? I notice that the gentleman who has just spoken, Mr. Cartwright, recommends a 30 volt system where axle light is used. I would say that you must use axle light for the time being, but it is presumed that in the future the dynamo will be removed and the batteries will be charged while the cars are on the electric zone, and in that case 30 volts is very low.

Mr. Cartwright: If the axle light equipment is removed from the car, then you are not confined to 30 volts.

Mr. Wildin: But I understand you to assume that you were going to have 30 volts.

Mr. Cartwright: Not necessarily.

Mr. Wildin: Then you will have to put in something else.

Mr. Cartwright: We will go to 60 volts.

Mr. Wildin: Then what is the use of throwing a battery away?

Mr. Cartwright: When you go to 60 volts you add a battery.

Mr. Wildin: We are going to put a motor generator set in the electric locomotive and charge the cars while on the electric zone. We are going to have 60 volts, and I do not like the recommendation of a 30 volt system where axle light is used.

(The report was accepted and referred to letter ballot.)

M. K. Barnum (I. C.): It seems to me that in referring this report to letter ballot the members would have to vote on it as a whole and not in detail.

The Secretary: That will be arranged.

C. A. Seley (C., R. I. & P.): In referring the report to the members for letter ballot I would suggest that the recommendations of the Association of Railway Electrical Engineers, which have been voiced here by Mr. Cartwright, be put in form so that our members may consider them in casting their ballots.

Mr. Schroyer: If. that is a motion, I second it.

(The motion was carried.)

REVISION OF STANDARDS AND RECOMMENDED PRACTICE.

F. W. Brazier (N. Y. C.): Under the head of "Proceedings," I think we will make a great mistake if we leave out of our proceedings the code of interchange rules. Those are our laws and they should go in along with the proceedings. Otherwise I am agreeable to having the result of the meetings of the arbitration committee published separately.

C. A. Seley (C. R. I. & P.): On the basis of Mr. Brazier's remarks, I would recommend the inclusion in the proceedings of all matters which are standard. When we go to our bookcase and get down the proceedings of the last year or the proceedings of five years ago or ten years ago we do not want to find that it is short of the standard that existed at that time, whether they are rules of loading material or interchange rules, or drawing; and I think if this association cannot afford to put them all up in one volume that we ought to increase the dues.

The Secretary: The rules for loading material have been kept out of the proceedings for quite a number of years. They are now a part of the interchange rules and are referred to separately in a preface.

E. W. Pratt (C. & N. W.): I would like to ask Mr. Kleine, in regard to paragraph 72, if the manufacturers' point is well taken it does not seem to me that the last paragraph covers any changes in limiting diameters on sizes below 1½ in. Was that the intention of the committee? To reduce both below and above the nominal size of the round iron 1½ in. and larger in diameter would not apparently cover the 1⅜ in. that the manufacturer in this instance suggests changing.

Mr. Kleine: The manufacturer objects to the limit of 1⅝ in. round iron—not the 1⅜ in.

H. LaRue (C. R. I. & P.): In paragraph 65, in regard to the location of door handles, I hope the recommendation of the committee will prevail there.

The President: This is a very important subject, gentlemen, and we have plenty of time, and I hope there will be full discussion.

C. A. Schroyer (C. & N. W.): In regard to the sealing point on side doors, we are doing on this precisely what we have done for years on our safety appliances. We have made it one place and then another, with the result that none of us has ever gotten it the same; we have never gotten together on it. Now, if there is any reason why it cannot be put at 5 ft., why, we ought to say so. If there is a certain construction of door that would permit of the 5 ft. location of the seal pin, cannot those doors be arranged when new cars are constructed so they will permit of 5 ft. or 5 ft. 6 in., whatever it may be?

Mr. Garstang (C. C. C. & St. L.): I understood Mr. Kleine to say that the American Railway Association had adopted a limit for the height of hasp on side doors. Now, if there is no objection to that limit by members of this association, why not adopt it as the standard of this association?

Mr. Kleine: I will read the communication from the American Railway Association, which is dated May 22, 1911:

"At a session of the association held on May 17, the following resolutions respecting a standard height for car door fastenings were adopted on the recommendation of the commtitee of maintenance:

"Resolved, That car door fastenings should be located normally 5 ft. above the top of the rail, but not less than 1 ft. above the floor of the car;

"Resolved, That these specifications for the location of car door fastenings shall apply for all new equipment and wherever it is necessary to replace fastenings on old equipment."

The latter part of that is rather serious, when it comes to repairing cars. You keep to the standard door and you have the hasp in one location and the staple in another location. That is, if you are making extensive repairs. For new cars I do not doubt that a height of 5 ft. would be conformed to, with the possible exception of some refrigerator cars. I think Mr. Fuller has some refrigerator cars where he has a sort of double door lock, and I think 5 ft. 8 in. is as close as he would come. Take the Wagner door rods. We operate them from the freight house platform, and if the seal is located 5 ft. above the rail it is rather close to the platform, although probably some arrangement could be made there in new cars to locate it 5 ft., but with the existing cars it would be a very serious matter to change some of them.

C. E. Fuller (U. P.): It is a fact that 5 ft. is not feasible for present equipment, especially on refrigerator cars, without you change your door-opening and door-locking device entirely. It seems to me that the committee has done all that they could very well do. With the ordinary box car 5 ft. will do all right. To confine it to exactly 5 ft. is an expense that I do not believe we want to incur, especially with our present equipment. The variation of 9 in. is not sufficient to be objectionable or to warrant the additional expense that would be necessary in order to bring the old equipment up to it. I think the committee's recommendation of 5 ft. to 5 ft. 9 in. is about as close as we can ask.

J. J. Hennessey (C. M. & St. P.): It seems to me that the recommendation of the committee is about correct. We should have a variation there. With old cars it would be very expensive to attempt to get them all 5 ft. In fact, if you did that you would have no fastening for your door hasp. Really, what is the object of having this to an inch? It is simply a sealing proposition, and the seal can be seen as readily at 5 ft. 6 in. as at 5 ft. Consequently I do not think that we ought to tie the railways up to a proposition that will cost them a great deal of money in changing their old cars.

J. J. Tatum (B. & O.): I would like to ask the committee if they have made any test as to the effect in changing the lock on a door in respect to the condition of the door. That is, as to what effect of the changing of the lock is on the condition of the door.

Mr. Kleine: A test was made by the representative of one of the Texas roads and submitted to the American Railway Association. That test showed that it did not materially affect the pull on the hasp by locating it 5 ft. above the rail. He compared it with 7 ft. above the rail, I think, and he made tests and took measurements with a spring balance. Of course, that depended largely upon the type of door that was under consideration.

W. E. Sharp (Armour Car Lines): It seems to me that the variation allowed by the committee in its report would only be sufficient to compensate for the various heights of doors from the rail, and it will develop in another report that there is a variation. Consequently, I think if we assume a location of 5 ft. you will find that you will have quite a variation.

F. H. Clark (B. & O.): If I recall correctly the action of the American Railway Association, it was to the effect that a variation of not less than 12 in. above the floor of the car should be allowed. That would cover some variation. Have a minimum of 5 ft. and a maximum of 5 ft. 5 in. The floor of many of these cars is 50 to 53 in. So if the recommendation of the American Railway Association was followed absolutely we would have a variation there. Perhaps, however, it is not enough.

Mr. Garstang: This was brought before the American Railway Association for the convenience of conductors and trainmen. A great many of these seals are located at such a height that it was almost impossible to see them, especially at night-time, and it was the desire of the association to get the seal as near the bottom of the door as would be practicable.

C. A. Seley (C. R. I. & P.): Inasmuch as we have a practical instruction from the American Railway Association, it seems to me that we could cover both sides of the question by a slight change in the verbiage of the committee's recommendation, namely, making the height preferably 5 ft. from the rail, with allowance variation, instead of making it 5 ft. to 5 ft. 9 in.

Mr. Kleine: The committee would accept that. I think it would be better to indicate to car builders the preferable location, and I believe it would overcome the objection that has been made. You can get all sorts of variables depending on just how the roadbed is located. While 5 ft. 9 in. is a little high, it is still within the range of vision in ordinary railway yards.

The President: Would it be agreeable to the committee to incorporate in its report Mr. Seley's suggestion?

Mr. Kleine: Yes, sir.

Mr. Schroyer: I move that the report of the committee as presented, with the modification just mentioned, be accepted and referred to letter ballot in so far as the recommendations are concerned, excepting those pertaining to safety appliances.

Mr. Kleine: That is agreeable to the committee. The recommendations referring to safety appliances are to be left open for further consideration. Also the questions that were submitted to the committee on steel train lines.

The President: Does the mover of the motion accept that amendment?

C. A. Schroyer: Yes, sir.

The motion was carried.

Mr. Seley: I would like to have an explanation as to the three items referred to the convention for disposition. They are items 7, 78 and 80.

Mr. Fuller, referring to item 7: This question is raised for the purpose of obtaining the full benefit of the load. In other words, if we have a 100,000 lbs. capacity car the weight of the car is based on the carrying capacity of the axle. We have as an illustration a 100,000 lbs. capacity car which weighs 47,000 lbs. With 10 per cent overload that brings the load up to 157,000 lbs. Now we have another class of car of 100,000 lbs. capacity that weighs 37,000 lbs. These figures you understand I am simply giving as illustrative. This car really weighs 37,800 lbs., an all-steel box car. Now, with 100,000 lbs. capacity and the 10 per cent overload that makes it 147,000 lbs. Under the present markings, the cars carry their capacity plus 10 per cent, and the result is that we are hauling a 100,000 lbs. capacity car with 110,000 lbs. in it and are not obtaining the full benefit of the work of light design. It is a question of marking the car so that it will not interfere with the accounting system to bring it up to the full load. There is no reason why if we can save an approximate amount of money on hauling light weights and increasing our tonnage by hauling these light weight cars that we should not receive the same benefit in hauling. In place of having 110,000 lbs. we ought to be entitled to 120,000 or 125,000 lbs. Raised the capacity of the car from 100,000 to 110,000 or 115,000 lbs., or whatever will bring it up to the carrying capacity of the axle. I think that is emphasized quite plainly by those of us who have worked on the light weights, cutting off all unnecessary weight of cars in order to avoid hauling dead weight. We want to increase the revenue if we can by hauling more tons in that car. I think this association should take some action that will be clearly understood, and not force us to go to a larger axle. The gross weight of the load and the weight of the car should govern, in place of the capacity.

The President: I would suggest that Mr. Kleine read this paragraph again and let us have it discussed more fully. We have plenty of time and we can do it now.

[Mr. Kleine read item 7 of the report.]

Geo. Gibbs (Penn.): I would ask the committee whether it gave any attention to other factors which have limiting conditions or dimensions, affecting the capacity of the cars; for in-

stance, the kind of wheel that is used certainly has a very important bearing. We know this from our experience with coal cars. As I understand the report, the committee justify the use of the maximum weight, based on the capacity of axles alone; whereas the fact is that the wheels, especially the cast iron wheels, have proved to be a very active factor in limiting the total weight capacity of the car, to say nothing of the column bolts and springs and other parts. I suggest that it be not stated, as the sentiment of the convention, that it be good practice to mark the carrying capacity of the cars, dependent on the axles, regardless of other parts of the cars.

Mr. Fuller: In answer to Mr. Gibbs I would like to say, as an illustration, taking our 100,000 lbs. capacity cars, we are not increasing the load at all. What we want to do is to bring the capacity of the cars up to where they ought to be. We were running 100,000 lbs. capacity cars weighing 47,000 lbs., and we built a car of similar capacity weighing 37,000 lbs., with the same truck, wheels, axles and springs as under the other car, and what we would like to do is to haul 10,000 lbs. more of freight in that car. We are not putting any more labor on the trucks or wheels, and not subjecting the car to any harder service. We simply want to reap the benefit of cutting down the dead weight and in place of the dead weight to haul that much more freight in that car.

Mr. Gibbs: That is, the committee, if I understand them correctly, say that you mark the car 161,000 lbs. maximum weight, and apparently they have not given any attention to the other limiting factors. In my remarks I had no special reference to Union Pacific cars, but my comments were addressed to the committee in regard to the principle involved, in stamping a car 161,000 lbs., capacity, without taking into consideration other factors which should be considered in equipping cars for that additional weight. The time was when we could change the capacity of cars from 40,000 to 60,000 lbs. with a paint pressure load, simply changing the marking, but that time has now passed.

M. K. Barnum (Ill. Cent.): It seems to me this matter is of a good deal of importance in view of the criticism the railways have been under during the past year as to their uneconomical methods; and this is a matter which has been found to be considerably complicated, but I believe it is worthy of the careful consideration of the special committee, and if I am in order I move that it be referred to a special committee for reporting to the next meeting.

J. J. Hennessey (C. M. & St. P.): I would like to have the report cover everything about the car, from the rail to the top of the roof in a box car as stock car. The committee should check the car throughout to see that everything which they may recommend will be consistent and would overcome the objections presented by Mr. Gibbs.

Mr. Kleine: In explanation, Mr. President, of the committee's recommendation, we referred this to the convention for the very reason that Mr. Gibbs gives. It is all right as far as the axle goes, but it does not take in the other truck details. Of course, the present interchange rules do not do that on the maximum weight, which allows now 161,000 lbs. I think it is very well to refer that to a special committee.

Mr. Hennessey: In seconding Mr. Barnum's motion I want to say that I would like to see everything connected with the car, the trucks and column bolts, the whole construction, as well as the car body considered—the whole construction must be taken into consideration if you increase the capacity of the cars above their present marked capacity.

Mr. Barnum's motion was carried.

Mr. Seley: In regard to paragraph 78, I move that the proceedings include the code of interchange rules, rules for loading long material, and also the standards and recommended practice, leaving out the decisions of the arbitration committee.

Mr. Fuller: I have no objections to having all of these matters included in the book—personally I think it is a very nice thing to have all of these subjects included in the book—but I want to say to you gentlemen the book is getting so large that I do not believe you will be able to use it with convenience if you keep on increasing its size. We must reduce the size of our volume. It is too large, and personally I do not see why the rules for loading long material and a few other rules, should not be incorporated in a separate volume. The book is going to be very unhandy, if we keep on including these various items in it. I have no objection to it personally, but I think the matter should be very carefully considered before Mr. Seley's motion is adopted.

O. C. Cromwell (B. & O.): The book is becoming very unwieldy and very bulky to handle. We now omit certain portions of the proceedings of the convention from the Annual Report, and publish them in a separate volume. Why cannot we take more out of it? Split it up into two volumes. It is unwieldy and it takes considerable time to locate the information you desire. I think the subject ought to be pretty thoroughly discussed before you take action on it.

J. J. Tatum (B. & O.): I think our book of proceedings is becoming too unwieldy. The more we add to it the more difficult it becomes to handle the book. The car inspectors must refer to the book continually. It is too unwieldy in its present form. It takes some time to train the car inspectors to get acquainted with the book, so that they will understand how to locate the information they desire. When adding in these rules for loading long material and some of the other things which we put in the book, they will not know where they are at, and you must remember that the class of employees that we get to do this work are not the best men in the country, with the best brains, and for that reason we must use judgment as to what is put into the book.

Mr. Seley: I did not know that the Baltimore & Ohio furnished the car inspectors with our proceedings. I will admit that the last volume is rather large, but the discussions might have been condensed considerably without affecting its value. Then the report of the committee on air brakes, which is a very valuable contribution to the literature on the subject, increased the size of the report last year, but it is not paralleled in our reports of this year so far as I know, and I do not believe our volume for this year with what is included in my motion will be as large a book as the one for 1910.

T. H. Goodnow (L. S. & M. S.): I think that it would reduce the size of the book is the part relating to the standards and recommended practice be published separately, simply retaining in the proceedings the standards which are required the most, not the standards which are required by the inspectors, but by the officers; the inspectors would not have to carry a book of that size, but still the cuts would be in it, and for further information reference could be made to a separate volume.

COUPLER AND DRAFT EQUIPMENT.

Mr. Stark: I presume the question of the emergency coupler will be of more interest than any other feature of the committee's report. The question as to whether the necessary increase is to be accomplished by increasing the length of head or by an increase in the length of shank is a question which should provoke a free discussion. The overhang will be practically the same no matter whether it is accomplished in one way or another, and also the effect on the center sills and longitudinal sills. The tendency to shank failures would not be increased by increasing the length of coupler shank except where cars are equipped with very substantial buffer blocks, in which case the car frame, of course, would absorb more or less of the shocks and relieve the shank, but the buffer block is a rather indefinite quantity. In the near future it will be necessary to consider the whole proposition of coupler design and capacity. It is a question whether we ought not at this time to take into consideration the length of the coupler shank, as it is now the coupler yoke in some cases comes in contact with the end sill construction. To increase the shank and reinforce it in proportion would give you more longitudinal travel. This would enable the friction draft gear to dissipate the shocks to a great degree in proportion to the increased travel. To make a radical increase would, of course, increase the overhang which would be detrimental.

There is one feature about increasing the shank, which is important, and that is to make it possible to increase the connection between the coupler yoke and the shank—whether that is necessary or not, is a question for this body to determine. As it is now the coupler shank is short and oftentimes you have to cut away the end construction of the car to provide for the longitudinal travel, and I believe that the question of length of coupler should be considered not only in connection with the emergency coupler, but in connection with the coupler of the future. This is a matter of vast importance, and I believe the coupler committee would court suggestions and the only way in which to work this out will be by making tests of couplers of various designs, so far as reinforcing the head or the shank is concerned.

F. F. Gaines (Cent. of Ga.): As a member of the coupler committee, I have affixed my signature to the report, but there are one or two items in the report concerning which I am not altogether in harmony with. In the first place, the committee turns down the recommendation that the 8½ in. butt be made standard. Last year that failed to carry by only 12 votes, and it looks to me as if it was too close a vote on which to turn down such a recommendation, and that it should be again submitted to letter ballot. The 8½ in. butt is used all over the country. Everybody must have them in order to make repairs, and it should be made standard. In regard to the temporary coupler, I have been looking at a coupler recently on exhibition here having 11¼ in. between the face ofthe knuckle and the striking point, and it is not a bad looking coupler. The overhang does not look anywhere near what you might think it is. It gives more room for the lock, for increasing the strength of the walls, and backs up the guard arm in better shape than the 9½-in. head. I would like to suggest, for the earnest consideration of this association, not making a temporary coupler with say a 2-in. increase of the head, but making a permanent coupler, so that there will be only one coupler. I do not believe that we are going to make any mistake in increasing that head.

F. W. Brazier (N. Y. C. & H. R.): As a member of the coupler committee I signed the report in order to bring it before the association. But referring back to this report I would say: It is to be regretted that conditions have arisen so that there is any question relative to the necessity of having a different length coupler. For one I would be opposed to having more than two lengths of couplers. In the report you will note is to be called a temporary standard coupler, and is not to be used in any new equipment. In other words, new equipment will be built so as to conform to the United States Safety Appliance Standards, using our present standard coupler. I feel that unless this association takes a decided stand the different roads will write the coupler committee and there will be a large number of recommendations as to different lengths of couplers. We mgiht as well decide at once that there should not be but one additional length of temporary coupling.

In the convention of 1904 I suggested that a committee be formed

to report the desirability of having a coupler designed standard so that the knuckle locks and other parts of the coupler would all be interchangeable. The coupler committee of 1905 recommended that a special committee be appointed to work in connection with the coupler committee. In the convention of 1906, the committee on the composite design of coupler, of which I was a member, made its report and great stress was then laid on the fact that none of the manufacturers were willing to give up their patent rights and surrender them to the association; also it was the opinion of the railway representatives of the committee that it was not in accordance with business ethics to ask the manufacturers to surrender their rights without compensation, and the Master Car Builders' Association is not a body which can properly acquire rights of this character and sell them or give them to manufacturers, without rendering itself liable to charges of unfair discrimination.

It was also agreed by the committee that if we only had three or four kinds of couplers there would be less cause for complaint than at the present time. This committee concluded its report by commending that no couplers be purchased by railway companies unless they meet with the requirements of the M. C. B. Association and recommendations of the standard committee on tests of M. C. B. couplers and in this way the elimination of all couplers which do not fulfill the requirements would soon be affected. I am quoting the above to show the feeling at that time. I feel the time is come, and the experience that we have had with couplers is sufficient, so that we should get down to one standard design of couplers. My reasons are as follows:

We have to carry so many different parts of couplers in stock to maintain the different kinds that it is great expense to the companies, a serious delay to freight and on a loaded car marked out for broken knuckle or knuckle lock of a coupler not standard to the line on which the failure occurs it is necessary, in order to make repairs, to remove the entire coupler and apply a new one complete. This means the application of a coupler not standard to the car. I find that the road I represent has in the past few months been compelled to order a little over 10,000 knuckles of 39 different makes; about 7,000 knuckle locks of 21 different makes; 246 knuckle lifters of different makes, and so on with other minor parts of couplers.

In these days of economy when we are trying to keep our stock low, you can readily see what is means to have so many different kinds of couplers to maintain. Recently we had a statement made showing the number of second-hand freight couplers on hand that we were holding for repair to be a total of 2,015; 1,547 we were holding for knuckles; 1,435 of the 2,015 for locks, and the balance for other minor parts. This represented 26 different makes of couplers. From my viewpoint this is all uncalled for—the railway companies represented in the association could have a special committee, or the coupler committee meet with the coupler manufacturers, and, without doubt, a design of coupler could be agreed upon that would meet all the requirements. I feel positive about this point, as I have taken it up with several of the prominent coupler manufacturers, and I am assured that they would be willing to get together and settle this point.

The second plan would be to have the coupler committee given power to design a coupler that meets the requirements, and that the association pay the necessary expense; then we would have a coupler with a knuckle that would be interchangeable for all couplers, and reduce the cost of our stock many thousand dollars a year, and also would save the delay of trains. A coupler arrangement should be provided at the same time, that would be operative either at the side or bottom and stop the trouble we are having with the top uncoupling arrangement. After 15 years of experience we know that either bottom or side uncoupling arrangement can be made absolutely satisfactory.

At the present time, when one of these numerous couplers, which are not standard to our own lines breaks, we either have to set the car off, or possibly in some cases use an emergency knuckle, and under the Safety Appliance Law no two cars could be coupled together with them; neither could we interchange this car with a foreign line with an emergency knuckle in, simply because we have not a knuckle that would fit the coupler. Now, what is the result? This car goes to the repair track. The coupler is taken out. A coupler is put in that we have in stock. Then, rather than to throw away the foreign coupler, which was removed, we order a knuckle and hold the coupler body until we get the knuckle, which may be any time from 1 to 4 months. These are facts and occurrences of this kind are happening every day on our roads. It is time that this association should wake up and take some action. I could give a great deal more data on this subject. I have the facts and figures with me showing the expense this means to the railways throughout the country as well as those I am representing.

I wish to repeat what I have said before, that there is no reason why this one design of coupler cannot be brought about and be interchangeable the same as journal bearings, oil boxes and other parts of cars. I am told that it will stop competition. It may be very interesting to the members of this association to know that to-day there is no competition in couplers. The coupler manufacturers have apparently devised means whereby the couplers are all one price, so the argument of competition is the same in either event. I believe that we should give this subject more attention and more discussion than ever before in view of the alleged inefficiency of railway methods to which so much publicity has been given. I believe that a duty rests directly on this association now, and I certainly believe that this can be brought about at the present time better than at any time in the past.

Views of Greek Temple Doorway During Various Intermissions of Convention Sessions, Atlantic City, N. J.

J. F. Deems (N. Y. C. & H. R.): I want to say just a few words on this subject. First I desire to emphasize what Mr. Gaines has said in regard to making this coupler with new dimensions standard instead of making it merely a temporary coupler. I cannot see any reason why we should be jealous of retaining the old standard dimension for the coupler. I fear the association has gotten into the habit of considering a dimension once established a sort of fetish and that it is well night sacrilege to depart from it. We seemed to have thought that for a great many years in regard to safety appliances, but we have departed from it now. Of course we know that it would add something to the weight of the head, making it a little more difficult to carry on the carry-iron, but as I understand it, the gain that we will obtain in regard to strengthening the walls and giving a better opportunity for the locking device will much more than compensate for that, and I do not see why we are starting out now with the coupler and calling it a temporary coupler, and thus introducing two kinds of couplers and perpetuating them for years and years. It does seem to me, as Mr. Gaines has stated, that we should go to work at this coupler with the utmost care and then it should be made the standard coupler.

I also want to emphasize what Mr. Brazier has said. It does seem to me that the time has come when we should have a Master Car Builders' coupler, not a Master Car Builders' type of coupler. I have talked that at conventions and otherwise for the last five or six years and I firmly believe that if we do not do that, if we do not make a standard coupler, we will be invited and compelled to make it. I know there is a great deal of discussion going on now in regard to insisting upon roads using one kind of coupler; and, as Mr. Brazier has said, in the face of the severe criticism that the roads have been subjected to on account

of their lack of proper management and so forth we cannot very easily defend such a ridiculous situation as he cited if we admit that the Master Car Builders' Association is unable to design a coupler. If we can do that, why, let us do it, and if we do it, let us use it.

I believe that this subject of couplers is one that should be taken in hand at once, and I cannot see any reason why it should be doled along through three or four years before we come to any lasting conclusion about it. We have all used the M. C. B. coupler in its various forms long enough to know pretty nearly what is required, and I firmly believe we should take some action to-day looking to an early solution of the question. It may be that there are some members here who can advance some good reason why this coupler should be made temporary; I think Mr. Seley is one of those who thinks it should be made temporary, but I cannot see it that way; I cannot agree with him. Then instead of a standard contour line, I think if this association does not take some action about that at an early date it will probably be required to do so.

J. J. Hennessey (C. M. & St. P.): I fully agree with the gentleman who has last spoken on this subject. I believe we have arrived at the time when we should have a standard coupler. At the same time I believe we ought to raise a committee to meet with the coupler manufacturers, and say to the coupler manufacturers that regardless of their so-called patents—and there are very few of their patents to-day that are valid on couplers—and say that one coupler must be designed, and the different manufacturers should waive all questions of patents and get down to a fair manufacturing profit. That is practically where it is to-day.

J. F. Walsh (C. & O.): It seems to me this discussion this morning, with respect to couplers, is strongly opportune. As I remember the matter, the present M. C. B. type of coupler, the contour, the knuckle, the general design of that coupler was adopted a number of years ago when the bulk of our cars were very much lighter in capacity than they are to-day. About the time that type of coupler was adopted it became fashionable to take off the buffer block, and we have been buffing with that unfortunately weak coupler, until I know of one case where one car had 8 couplers in a year. In connection with this matter of couplers, would it not be well to arrange to adopt some form of coupler that would constitute not only a coupler, but a substantial buffing device in connection with the coupler. I think it would be a good plan, as Mr. Deems said a moment ago, if we do not go into this matter some one will go into it for us. The M. C. B. Association ought to endeavor to bring out something in the way of an M. C. B. type of draft rigging. The draft rigging we have to-day provides the same strenth for pulling as it does for buffing and we know that is wrong.

C. E. Fuller (U. P.): If I understand the committee's report correctly they disapprove of cutting out the 8¾-in. coupler, and I would ask the chairman of the committee or some other member of the committee what their objection is to cutting out the 8¾-in. and going to the 9¼-in. coupler?

C. A. Schroyer (C. & N. W.): There are 39 couplers to-day, and by putting in these different standards, you make 39 times 39 couplers.

Mr. Fuller: We are getting away from the 8¾-in. coupler, and yet the committee objects to cutting out that coupler and going to the 9¼-in. coupler, if I understand the report correctly. I think we ought to get away from the 8¾-in. and go to the 9¼-in. and thus reduce the number of standards.

S. M. Hindman (Penn.): The reason the 8¾-in. coupler was left there, is, that the 9¼-in. dimension simply take care of the couplers designed after January 1, 1909. You have these two standard couplers in existence, and the 8¾-in. coupler will be in existence until it is worn out and scrapped. You must take care of them until that time.

Mr. Fuller: You do not have to manufacture any more of them?

Mr. Hindman: No; that specification says that all couplers manufactured after January 1, 1909, must have 9¼-in. dimension.

Mr. Fuller: In reference to this discussion, it seems to me that the question with this association taking action on matters pertaining to standards is not only a question of getting down to a standard, but it is important from a commercial point of view. I am afraid we have all been disposed to try to keep too many things in existence. We have had the M. C. B. coupler for a great many years, and it is now further from a standard coupler than it ever was before, and five years from now it will be still further from being a standard coupler. I think Mr. Brazier's remarks are to the point, and this is a question that this association should take very careful note of. We cannot longer continue to defend our position in regard to the M. C. B. coupler. If we are worthy of being called the mechanical representatives of the railways, we certainly should have sufficient ability to get down to a standard. There does not seem to be any more reason for having to carry 8, 10 or 20 different kinds of knuckles for our couplers than there is for carrying 8, 10 or 20 different kinds of brasses. We have a standard brass which will interchange and go into any car, and we should have the same thing for the coupler; and the sooner we take action the stronger will our association be, and I for one feel that this association has got to get down to rock bottom, and the members must forget a lot of their personal opinions and adopt a standard M. C. B. coupler after giving the matter full consideration—to consider the matter fully and know we are right and then adopt something that will be a credit to the association. I think we should use whatever is the standard, 9¼-in. coupler on all new cars, but the old cars are going to be in operation for a good many years to come, and we will probably have to use the 8¾-in. coupler on those cars. You must remember that even if we take action on this coupler question at this time it will be five or six years before we reap the benefits of it, and the sooner we begin on the matter the better.

Mr. Schroyer: The thought that comes to my mind in connection with this coupler question is this—that it is very much more important to this association and to the railways of this country that we should have a coupler in which the same knuckle would be operative. Now, the difference between couplers is in the difference in the shape of the knuckle and the knuckle arm, and the difference in the locking and unlocking apparatus in the side of the head. All the patents which exist to-day on couplers are in connection with these details. If we could require that a coupler be constructed in which the same knuckle could be used, regardless of what the uncoupling attachments may be, or the uncoupling or locking apparatus may be, we could under our rules, as they exist to-day, buy one style of coupler for our own use, and under our rules we could put that style of coupler into any car that came into or possession in which we had a broken coupler. Our greatest difficulty to-day in the maintenance of couplers is in the knuckle, not in the coupler heads themselves, because we can soon work out a coupler head, but the knuckle question is the difficult one, and we are required to carry in stock all the different kinds of knuckles that Mr. Brazier referred to. We do not want to stand in the way of progress in the way of a coupler, but I think we should say to the inventor —you must invent a coupling in which a certain kind of knuckle will be operative, and your locking attachments in the head must be operative from an upper or lower connecting rod, and if we could secure these things I think the difficulty would be reduced to a minimum, and we would not be standing in the way of progress in the development of coupler construction.

H. L. Trimyer (S. A. L.): As a member of the coupler committee I wish to say that I telegraphed authority for my signature to be appended to the report, but as Mr. Gaines has said in regard to himself, I will say for myself, there are many things in the report which do not exactly meet my views. In the first place, I am in favor of one standard coupler. While I cannot agree with Mr. Schroyer that all the troubles are in the knuckles, I will say that the troubles we have developed are in the knuckle pins, coupler locks, faces and guard arms. We have some conditions existing in our territory that have led me to believe that the coupler should be entirely redesigned. The coupler, as stated by Mr. Walsh, was designed years ago for comparatively light capacity cars, and tests I have actually made lead me to believe that the present contour lines are not just right. We have a large number of failures of knuckles, locks, and knuckle pins are also falling in a great many of our cars, and we have a few failures of the guard arms. We have some conditions existing on two of our connections, practically new roads, running up into mountaineous territory, operating 75 to 100 car trains, and experience with the couplers on those trains has led me to believe that the present coupler is wholly inadequate for the service.

I have discussed this matter with a great many coupler manufacturerers and they have agreed that the present coupler is not of sufficient capacity for that service. As Mr. Gaines stated, I believe that we require additional space in the head of the coupler to enable us to strengthen up those parts that are failing, and I am in favor of increasing that distance so as to give us an opportunity to strengthen the locks, knuckles and knuckle pin, and there is no reason why we should not design a coupler that shall meet all of the requirements both in regard to the large hump yards; the difficulties experienced around the coal tipples and bad track conditions which are responsible for a great many coupler failures at the present time, and I for one am in favor of the committee making some effort to adopt a standard coupler.

G. W. Wildin (N. Y. N. H. & H.): I move that the committee be instructed to design an M. C. B. coupler and present it to the next convention.

Wm. Garstang (C. C. C. & St. L.): I offer this amendment to Mr. Wildin's motion: That the committee on coupler and draft equipment be authorized to take up with the coupler manufacturing companies the matter of redesigning the coupler, and invite them to join the M. C. B. committee in the designing and adopting of one standard freight car coupler.

Geo. Gibbs (Penn.): In fairness to the coupler committee I think they should be given some sort of guide as to what is required. I think in the case referred to by Mr. Trimyer, they are hauling trains with two or more Mallet engines ahead, which stretch the couplers out of shape. If two Mallets will not do it, three or four will, and if they keep putting on these Mallet engines on their trains in these numbers, they will pull all their couplers out of shape and have no end of coupler failures. I think the committee should have instructions as to whether they should design couplers to be used in trains hauled by 2 Mallets or 10 Mallets—unless they have instructions of this sort it will be difficult for them to perform the work assigned to them.

The President: Mr. Wildin, will you accept Mr. Garstang's amendment?

C. A. Seley (C. R. I. & P.): Do I understand this authority conferred on the coupler committee will permit them to depart in all respects from the present standards of the association if in their judgment it is desirable to do so? I think the committee should be authorized to proceed regardless of present standards.

Mr. Garstang: My motion will allow the committee to use their own judgment in that matter.

Mr. Seley: I do not mean the present standard—of course, retain the contour line until that has been changed.

H. L. Trimyer: In answer to what Mr. Gibbs has said, I would like to say that actual tests made with one Mallet engine

and fifty 50-ton steel cars, clearly demonstrated that the present coupler will not meet the service required.

I want to say this was not an investigation made by the coupler committee; it was an investigation made by us on account of some conditions we experienced up there. In gaging 596 cars with a 5⅛-in. gage between the guard arm and the knuckle there were only 132 cars that would pass, and I believe every one of us here will be greatly surprised if we take a gage and start through our yards, if we follow the rules, to see how many cars we will have to send to the tracks or take the coupler knuckles and locks out to make them come to a 5⅛-in. gage as required.

I. S. Downing (Ill. Cent.): It would be interesting to know from Mr. Trimyer's remarks whether these couplers were old, worn couplers that had been in service that did not meet the test, or new couplers that were pulled out of shape.

Mr. Trimyer: The test was made on cars which had been on the road from four months to four years. We have actual figures —while I have not them with me, they can be shown to the coupler committee—which show that couplers which had been in service 41 days were out of gage according to the M. C. B. requirements.

W. F. Bentley (B. & O.): I would inquire whether the couplers referred to were all gaged to know whether or not they conformed to the M. C. B. requirements or came up to the gage before the test was made.

Mr. Trimyer: The cars were assembled together and gone over and gaged before test was made.

Mr. Schroyer: Regarding this getting out of gage, let me say that I am very sorry that anything of that kind should have gotten into our record. It is a condition which, if it does exist, is certainly very alarming, and we sometimes get wrong ideas as to why certain things are being done by this association. At the time a gage was established to be used for knuckles and draw bars and we used the short guard arm, and much trouble was occasioned in cars becoming uncoupled because of the gage passing the guard arms, but it was due to the bending of the light 1½-in. knuckle pin and the wearing of the wearing face of the knuckle. Those were the causes that prompted the use of a gage. The extension of the guard arm 1¼ in. has been almost entirely done away with that difficulty of cars becoming uncoupled on the road. On our road we are used that gage all the time, and I believe the majority of the principal roads of the country are using it. Where we find cars that are out of gage we have them corrected. If the bars in such cases fail to the extent that is mentioned, it is questionable in my mind as to how we can get bars that will stand. We certainly cannot do it with the present contour lines.

Mr. Trimyer: I very carefully considered this before saying anything about couplers getting out of gage, and I came to the conclusion that possibly we have gone a little too far in keeping these things quiet. I was greatly surprised to find how many couplers would not pass gage requirements.

Mr. Bentley: I would say that the most of the difficulty that we find is with the knuckle pin. We have established a rule on the B. & O., where we gage all couplers, and the most of our trouble seems to be with the knuckle pin being bent, or possibly sometimes the knuckle pin hole is worn, thus permitting the coupling to get out of gage. As Mr. Trimyer says, I think there is quite a number of them that we find out of gage, and frequently we are able to bring them up to the standard by applying a new knuckle pin.

Mr. Walsh: I think we have simply outgrown the conditions that the present type of coupler seems to have been gotten up for. Nine years ago we had one thousand 50,000 lbs. capacity cars, and to-day we have twenty-five thousand such cars. Nine years ago the tractive power of our freight locomotives was about 30,000 lbs. To-day it is 90,000 lbs. We have taken off our buffers and we are doing our buffing now with the couplers, and the knuckle pins of course have got to stand it. So you see we have outgrown the conditions that those couplers were made for, and I think it is high time for us to design something that will meet the conditions that we have got to deal with now.

The President: Mr. Wildin's motion is before the house. Are you ready to vote upon it?

Mr. Garstang: Before the vote is taken, Mr. President, I desire to say a word. On account of having been connected with car building for many years I think I appreciate the work that this committee has got laid out before it. Now, I think if we can get a committee of this association and a committee of the manufacturers to meet and let them get up one standard coupler it will solve the problem, and I think they should have assistance—indeed, it may be necessary to employ a mechanical engineer to work out the problem for them—and I would, therefore, suggest that this association appropriate to the committee a sufficient amount of money to carry on that work.

Mr. Deems: I heartily endorse that suggestion. I think we are approaching a very critical period in this coupler matter. What Mr. Trimyer has mentioned is going on all over the country, and this committee with the many duties that its members have to perform cannot, as individuals, take this work up and handle it as it should be handled, and it seems to me that they ought to have the money, and arrangements ought to be made so that they can employ a mechanical engineer to assist them in the detail of the work.

Mr. Stark: I desire to say on behalf of the committee that we have no objection whatever to working at a standard coupler. The demand has arisen from the membership of the association for a temporary coupler, and we are by no means wedded to the present standard; but there is a large expense involved and the committee has no appropriation or authority to spend a large amount of money in the working out of a satisfactory coupler and I think this association ought to provide for the committee in that respect. It has been expressed here to-day that these couplers are failing. I think possibly one reason of that may be that so many of them are purchased without specifications. To bring about a standard-coupler is going to be a pretty hard proposition. It is a question, too, whether we want just one single standard. You will have no means of comparing one design with another. It is a large subject. As Mr. Schroyer has said, if it can be worked out so that one knuckle will apply to all couplers that will be, a great step in advance; but we will have to provide also for a top lift and a bottom lift no doubt, because there are certain conditions that require it.

Mr. Wilden's motion was then carried.

M. K. Barnum (Ill. Cent.): I would like to offer a motion—perhaps it could have been put as an amendment of the other motion—that the committee be authorized to incur such expense for the employment of a mechanical engineer or other assistance as seems to them justifiable and that the Master Car Builders' Association stand the expense.

The motion was carried.

Mr. Gaines: Whie we have talked generally, there has not been anything definite about one point. If we get an increased head of the coupler that will give us 2 in. additional end clearance, it will save a lot of money, and I think it will be satisfactory to the majority of the roads. Therefore, I move that couplers with 11¼-in. dimensions be submitted to letter ballot.

The motion was seconded.

Mr. Seley: I think it is highly important that we decide now as to the amount of that extension. It was the argument on the safety appliance hearings that any extension would add to the overhang and produce a weakening of the structure, and I doubt very much the possibility of going any further in regard to extensions than is absolutely necessary. I am of the opinion that it will take more than 2 in. to save the troubles of some people in short clearances. It would be very handy to them, no doubt, to have a coupler 5 in. or 6 in. longer than the present coupler, but at the same time I am persuaded that we would have no argument at all on the safety question, from an engineering standpoint, by this increase. I believe that what Mr. Gaines has suggested is moderate and consistent, and that further than that we should hesitate to go.

C. P. Cleaver (Rutland): I would like to say that I am opposed to that motion. We have expressed our confidence in this committee and in its ability to design a satisfactory coupler. Now, this is commencing to tie their hands at once, and I say that we should not do it. There might be had a dozen motions of this kind and the committee would find themselves in a position where they couldn't do anything.

Mr. Brazier: I do not think the member understands Mr. Gaines' suggestion. We are talking now about a temporary appliance, not a standard one.

Mr. Wildin: Why are we so anxious about this temporary coupler? If we can get a standard coupler inside of a year, why not that?

Mr. Gaines: There is just this one point to be considered. In the first place, I think the coupler committee ought to have some designating dimensions, and my motion was to submit this proposition to letter ballot as a new standard, and thus give the coupler committee an increased space within which to work out the strength of the coupler and the various details. Another thing. We can gradually have all our cars come under the law without any extra expense and get our equipment standard where the 2-in. dimensions will do it without any additional expense. I think probably it will be necessary to have special couplers, probably on some few roads with a larger end clearance, but not as a standard.

T. H. Goodnow (L. S. & M. S.): In seconding Mr. Gaines' motion it was with the understanding that it was not to tie up the coupler committee at all to the 11¼-in. standard head. In answer to Mr. Wildin, I would say that I think it is necessary to get a temporary coupler with that length of head at the present time so that we can stencil our cars as they come off the tracks. The United States Safety Appliance standard is required, and it will be necessary before four or five years roll around to have a great many of these couplers. I do not think the action taken by the association this morning will provide within the next two years, anyway, a standard coupler. I think the 11¼-in. dimension should be be considered as a temporary expedient, and as not tying up the coupler committee at all.

Mr. Deems: I very much hope that Mr. Gaines' motion will not prevail as it applies to the work of this committee in designing a coupler. I can realize that it might be very well to have it prevail for the period intervening between now and the time we get the standard coupler. Indeed, it is quite probable that the committee will use that dimension, but I do not think we should tie their hands. If this is offered as an instruction to the committee in their designing of a new coupler I certainly hope it will not prevail.

Mr. Wildin: I want to emphasize what Mr. Deems has said. I do not understand where they got their dimension or why it is said to be satisfactory. If this committee is going to design a coupler we ought to keep our hands off and let them alone. When they put in their report, why, then is the time to jump on them if you think it necessary; but do not tell them in advance what they must not do or what they should do.

Mr. Gaines: It was not my idea to tie up the hands of the committee at all. I think Mr. Deems brought out the essential point when he stated that it is going to be some time before the

committee will be ready to submit a standard. Meanwhile the 11¼-in. length I think ought to go to letter ballot and be used if carried. Besides, it will be an indication to the committee, if it should be adopted as the present temporary standard, without tying up the committee to it at all.

Mr. Wildin: I have no objection to the motion, as Mr. Gaines now explains it.

C. E. Chambers (C. of N. J.): I do not understand why the figure 11¼ in. is arbitrarily taken. We have draw bars and rigging ranging up to 5 in. in length, and I fail to see the necessity of making any standard coupler which might apply to some individual road to help it out of a difficulty and put it on us.

Mr. Fuller: I agree with Mr. Chambers that it is going to get a lot of couplers on our hands unnecessarily, and half of the roads won't have an interchange. If you have got to move your draft rigging out you might as well move it out 5 in. or 6 in., and I, for one, dislike to see a change of couplers all the time. While it may be necessary for old cars to have an emergency or temporary coupler, I think it ought to be temporary and not standard in any particular. I might say that there is probably more earnest work on the part of the committee on the expense incidental to bringing this clearance to meet the requirements than any other one subject. The subject was very carefully considered relative to the effect of the overhang. It looks nice, and I want to say to you that if you put 85 or 100 cars on, the longer you bring out the head of your coupler the weaker your structure is. I think this addition ought to be very carefully considered.

Mr. Chambers: As to a new standard coupler, I think anybody who has walked through the repair yard will realize that the present coupler has outlived its usefulness. We do want a new coupler, but let us have it a permanent one.

Mr. Trimyer: I want to second what Mr. Chambers has said. I have made a lot of measurements of what the average distance required is to meet the new Safety Appliances Law. The figures show that we require 4¼ in. on wooden cars and 2⅜ in. on steel cars. Therefore, the 11¼ in. proposed by Mr. Gaines would do very little good on either class of cars.

Mr. Gaines: I would like to ask Mr. Seley whether the summing up of the figures that he tabulated last year would not show that a very substantial majority of the cars that have to be changed for end clearance would be covered by an increase of 2 in.

Mr. Seley: As I recall the figures, the tabulations of all the cars reported to the committee shows that 2 in. would cover over 50 per cent of the cars.

D. F. Crawford (Penna.): I am quite in accord with the idea of designing a standard coupler by this association, and also a number of other standard parts that are not perhaps quite as annoying, but I would like to ask just one question. Several times this morning the present coupler has been referred to as inadequate, and Mr. Chambers just spoke of walking through yards and looking at the discarded couplers. What do you know about the present coupler We have got to use it for some time in many cars. Is the coupler complained of the coupler that is required to pull a 150,000-lbs. car? That is our present coupler. Or is it the coupler that we purchased five or six years ago with no specification? Or the one that is purchased now without specification? We will have to use this present coupler for a year or perhaps two years.

Mr. Stark: I agree with Mr. Wildin that we ought to go slow on this matter of a temporary coupler. The wooden cars that are now short of end clearance could be changed within the next five years by moving the draft attachments out, and they will fail many times before that time comes, when repairs and the corrections can me made at the time of the making of repairs. Steel cars will be with us for years to come, and it is possible for the new proposed standard coupler to be applicable to our lighter design cars. It is possible that we may avoid substituting three or four temporary couplers and that the standard coupler will apply to the cars that we intend to perpetuate.

Mr. Gaines' motion was put, and lost.

Mr. Seley: As I understand it the coupler committee is charged with the duty of getting up a new standard coupler. I do not understand that anybody or any committee has been charged with doing anything in regard to a temporary coupler. Am I right or wrong about that?

The President: You are right about it.

H. E. Passmore (T. & O. C.): Has not the Interstate Commerce Commission got that matter in hand now? Haven't they made some order about it?

The President: I have not heard of any order that has been issued in that respect. I would ask Mr. Seley if he has anything to propose in this regard.

Mr. Seley: I believe the coupler committee should undertake that work, possibly by a sub-committee; but I would presume to dictate to them how they shall handle the matter. I believe the coupler committee ought to handle all coupler questions, whether those of a temporary coupler or of a permanent coupler. I would move, Mr. President, that the coupler committee be instructed to prepare a design regarding a temporary coupler and submit it to the executive committee; his report to be expedited as much as possible through circulation of information regarding the additional length, which information shall be gained by the most expeditious means. In other words, I mean that the report to the executive committee should be made as quickly as possible.

The motion was seconded.

E. W. Pratt (C. & N. W.): I would like to ask when this has reached the executive committee, what action can they take that will bring it to a close as soon as possible? Have they the authority to submit it to letter ballot before the next convention?

Mr. Seley: Indeed they have. They can do anything they like with it.

S. M. Hindman (Penn.): In order that the coupler committee may work intelligently to provide this temporary coupler as suggested by Mr. Fuller, there is certain information that they will have to get from the various roads. Now, they have asked in their report, in order that the number of standards may be kept to the minimum, that the members advise them of the number of cars requiring this increase. They will have to get that information before they can go ahead.

Mr. Seley's motion was put and carried.

TRAIN PIPE CONNECTIONS FOR STEAM HEAT.

Mr. Downing: I overlooked something I should have referred to. The committee on standards in their report yesterday referred to certain matters which in turn were referred to our committee. One was the size of the hose on passenger trains. Our committee did not feel they should take any action on this matter, as we were appointed to consider the matter of steam heat connections. In regard to showing the angle cock at 30 deg., we agree with the committee on standards. As to Mr. Fuller's remarks concerning the kinking of the hose, until you adopt a standard end valve, a standard coupling, you cannot get away from it. The angle at which the hose leaves the end valve and goes into the coupling governs. I have no objection to the committee being continued, but I do feel that what we have recommended as a standard for this association should be made standard and that the members of the association should adopt the standard in practice. It has been on the books since 1903, and should either be made standard or taken off the books.

Mr. Fuller: That is the reason why I made the motion to continue the committee. I do not believe that this association desires to adopt the present practice. I did not know until about one month ago that we could accomplish what I would like to ask this committee to present to us, and I wish to take exception to the remarks of the chairman of the committee that we have to use one angle valve for the end of the car or one coupling. Any pipe fitting can be brought to the required angle, whether it is a globe valve or angle valve or simply a T on the end of the pipe. The angularity of the coupler has more to do with it than the connection of the train pipe line.

I should like to see this committee charged with recommending the adoption of a standard size of hose. If you want it one ⅝-in. adopt that, not 1½-in. I also think the committee should be charged with something in the way of a nipple besides the old style nipple, with which we find it is almost impossible to hold the hose on, especially with head-on system, where we use anywhere up to 200 lbs. steam pressure. There is a nipple which I submitted to the committee which is not patented, at least the patent is not valid, and everybody is making it, and every steam heat hose company and a great many of the roads have their own patents and are using it. If there is any question about patents then I would suggest that question be considered. I do not want to recommend a patented device, but do want to recommend a positive nipple and clamp for a hose connection.

C. H. Osborn (C. & N. W.): In designing a standard coupler I think that consideration ought to be given to the question of designing some kind of a positive lock that will hold the couplers together. We have a number of different kinds of couplers today that can be coupled together, but cannot all be locked together, and that is the greatest objection I have to the different kinds of couplers. Another thing, I do not quite agree with the recommendation concerning Fig. 2; that the hose should be fitted up with a nipple on each end and screwed into the head. We found where that is done, that the heads are kept at outside points, unscrewed from the hose, and new hose are attached and screwed into the heads, and the heads kept in continual service without having to go into the shops and be looked over and fixed up, and that is the cause of a great deal of trouble with the joints on the head. I think the head that is clasped to the nipple, so that when the hose gives out the head has to go into the shop with the hose, where is an opportunity for testing it and grinding in the joint for the gasket, etc., it is a much better plan and it gives us an opportunity to shop them and fix them up.

Mr. Downing: In regard to Mr. Fuller's remark about the nipple, when Mr. Fuller submitted to us the print to which he has referred, we took the matter up and we were advised that it was a patented device, and I think the clamp referred to by Mr. Fuller is a good deal better than this clamp, but we understood it was patented and did not consider it. In regard to the two-piece coupling, we felt that it would be a long time before this committee would be able to get a coupling that would be adopted, so we thought if we could get a two-piece coupling, we would not have to change the hose and coupling at interchange points as we are doing now all over the country. The committee should be instructed to act with the manufacturers of hose couplings. The committee would not attempt to design a coupling in two pieces, if we are going to have a standard. We simply wanted to have that as a makeshift.

F. W. Brazier (N. Y. C. & H. R. R.): As long as we have plenty of time, we might make an experience meeting of this. Regarding the length of steam hose, we find on our long 70 and 75 ft. cars

with our short and sharp curves, we must have a hose at least 25 in., and if we did not have it that length we would have considerable trouble. After a hose is in service for a while it congeals so that it becomes sometimes 1½ in. shorter than it was when applied. On our system we have some pretty severe weather, and do not find any necessity of having any locked couplings. I think our records will show that during the severe weather we have trouble sometimes, in going over our water tanks, where a piece of ice will uncouple everything, but for steam hose to be uncoupled in ordinary service is something unknown to us. We have a heavy head and it practically locks itself. As to the end train pipe valves, as referred to by the chairman of the committee, I thoroughly agree with his statements. As to blowing off, I find the trouble which causes the blowing off is generally that the inside lining on the head end system, Mr. Fuller speaks of, it softens up and peels off. That happens on our lines occasionally, but hardly enough to notice it. Mr. Fuller: I ask Mr. Brazier if it is not usually kinking that makes the hose shorten—if they did not knk, do you think they would shorten up as much?

Mr. Brazier: That contributes to it, but take some of the hose put in yard service, and confined in service, where we have from 75 to 125 lbs. pressure, the hose congeals and contracts after it is in service and shortens up.

R. L. Kleine (Penn.): When the report of the committee of standards and recommended practice was considered there were several items left over until the presentation and discussion of the report of the committee on train pipe and connections to steam heat, and I would make a motion that paragraphs 50, 51 and 52 of the committee of standards be referred to letter ballot.

The motion was put and carried.

Mr. Downing: In case this committee is continued, I believe it should be instructed whether you want it to design the hose coupler complete, or give you the contour lines so the manufacturers can work to that, the same as we do in the case of the automatic coupler.

Mr. Fuller: It is not my thought to tie this committee down at all. I would like to turn them loose to cover the whole subject. If they can recommend a standard steam heat coupling and connection, hose and everything incidental to the system of steam heat, to this association, I think we should let them do it, and under my motion they are free to take up the whole subject without any strings to it.

T. H. Curtis (L. & N.): As Mr. Brazier says this is an experience meeting and I will say that the Louisville & Nashville R. R. equipped its passenger equipment with 26 in. hose, but it was so long we had to shorten it, and we now use 24 in. hose with good results. That is an inch shorter than Mr. Brazier is using and I feel safe in saying that a 26 in. hose is quite too long.

O. C. Cromwell (B. & O.): I think we should give consideration to some method of locking the couplings together. I have had considerable experience with the coupling opening after the hose has become set and hardened. In connection with the opening up of the steam-heat hose, it sometimes causes signals to be given to the enginer, through interfering with the hose. The whole subject is one which appears to need considerable revision at this time. I am not sure that the location of the train pipe at the end is correct, particularly as we are going into greater length of car. We have to have a greater lateral motion of the coupler, and to my mind that must spread the ends of the pipe, and I think the proper thing is to leave this matter wide open and leave it in the hands of the committee to make a thorough revision of the whole matter.

Mr. Fuller: I move that the committee be continued to take up the entire subject of steam-heat hose and connections, including a locking device, location of the train line pipe, angularity of the head and its connection, length of hose, and in fact the entire subject of steam-heat hose and connection for passenger car equipment.

(The motion was seconded and carried.)

Mr. Fuller: I move that the report be accepted and referred back to the committee. (The motion was seconded and carried.)

Discussion—American Railway Master Mechanics' Ass'n., Atlantic City Convention.

LOCOMOTIVE STOKERS.

C. B. Young (C. B. & Q.): For perhaps four months we have had the Barnum stoker in successful operation on switch engines in Chicago, and it produced no smoke, it has burned inferior coal and keeps up with other switch engines of the same class. The road engine has not been quite so successful as the switch engine, but has been doing pretty good work, and we are now developing for the road engine some modifications, embodying slight differences, which are necessary from the application of the stoker to the switch engine.

H. T. Bentley (C. & N. W.): I suppose the stoker has been put on the switch engine just to keep close observation of it, to enable you to watch its performance more closely, but it seems to me a switch engine is not a desirable engine upon which to put a stoker.

C. B. Young (C. B. & Q.): The stoker was put on the switch engine to avoid the smoke nuisance in Chicago and it is doing it.

George A. Hancock (St. L. & S. F.): I should like to relate an experience with the stoker on the St. Louis & San Francisco with a Mallet engine. It meets the requirements of the committee. The fuel economy is about in line with the report of the committee. The whole economy depends entirely on the fireman. The conveyor apparatus is entirely satisfactory. We have been troubled with the crusher, but that is on account of foreign substances, such as stone and slag on the stoker; outside of that, with the heavy engines, it is far superior to hand firing and the firemen after becoming experienced in the use of the stoker become expert in its use and bring about very satisfactory results. I think it will be easier on the flues. I think it is what we want for a heavy engine.

T. O. Sechrist (C. N. O. & T. P.): We have eight engines equipped with the Hanna stoker. One of these engines, a Mallet compound, has been equipped for 14 months, and during that time we have had two failures. These failures were due mostly to the carelessness of the crew assigned to the engine, but during all the rest of the trips that this engine has made, the performance of the stokers have been entirely successful and satisfactory, and we have had at least 24 representatives of foreign roads riding ou this engine. The same thing holds good in case of the Pacific type and consolidation engines equipped with the Hanna stoker. However, it does not meet with the full requirements set forth by the committee as it does not convey the coal from the tender to the fire box.

As far as the stoker being a distributer, I differ a little with the other members of the committee. I think that the stoker can be classed as a stoker only; the conveying and crushing part is only a small matter to apply in conjunction with the stoker. On the trip from Oakdale to Danville, Kentucky, which is a very extremely mountainous country, with grades 60 ft. to the mile, and curves of 6 per cent, at no time have we failed on account of steam on any of the engines equipped with stokers, and at the end of a 137-mile run the fire will be perfectly level. Any time there is trouble with the draft blast it can be overcome by adjusting the steam blast, which is equipped for a high and low pressure blast, and this applies to the back end of the fire box as well as the front. The Mallet engine consumes about 6,000 lbs. of coal per hour, while the consolidated engine will run along about 4,500 lbs., and the Pacific type engine will run about the same as the Mallet.

George L. Fowler (Railway Age Gazette): I rode one of the engines on the C. N. O. & T. P. the other day from Oakdale to Somerset We had the full tonnage with a consolidation engine, and about 920 tons was hauled up a 60-ft. grade. In one case, I think, we ran five miles up a 60-ft. grade from the start to the stop in 11 minutes. The engine was not only kept hot during the whole period of the run, but the steam never dropped below 125 lbs. The fireman on the engine had made only three round trips prior to that on a locomotive and these three had been on this stoker engine. The only information and instructions he had ever received concerning the stoker had been from his engineer in a desire to help him out. A run of 137 miles was made, winding up the last part of the run from Somerset to Danville with a tonnage of 1,200 behind the engine, the total coal consumed on the whole run, my estimate would be, was about 14.5 tons, certainly not more than 15 tons.

It seems to be a comparatively easy thing to make a stoker that will keep up steam. I have seen the Kincaid stoker and the Hayden stoker, and all others, keep up steam under ordinary conditions, but it has been by the use of an excessive quantity of coal. I think that a great deal of the excessive coal consumed by the present stokers on the market is due to the fact that it is such an easy thing to put coal in the fire box.

The stokers do not handle heavy, lumpy coal with the same facility that they do the crushed coal.

We noticed the very marked difference on that run, from Oakdale to Danville, in the case of the coal we took on at Somerset, the coal put on at Oakdale being a fine coal, and during the run to Somerset, 117 miles, the fire was just as smooth and as fine as could be desired. Two buckets of the fine coal and one bucket of rather lumpy was put on at Somerset and the moment the lumpy coal was put into the fire box, the blast was not strong enough; the coal backed up against the back sheet, and in the next few miles it was necessary to use the hook three times. The moment the lumpy coal was disposed of, the fire flattened out and there was no trouble whatever after that.

In adopting the use of the stoker the men should be given some idea of what they are going to use, what the stoker is for, how it works, and then have the roundhouse forces take care of the stokers. Give the stoker the proper kind of coal, and if you do that, with any of the three stokers now on the market, there is no reason why and engine should not be fired perfectly. I think that the firing can be done more economically with the stoker than it can be done by hand firing.

I believe the smoke runs between 2 and 3 on the Ringlemann chart, when the engine is working heavy and the fire is being con-

stantly fed by the stoker, but the moment there is any let up the smoke drops right down to practically between 1 and 2, if not down as low as 1; but there is smoke, and constant smoke, with both the Street and Hanna stoker when they are working heavily, but other engines not equipped with the stoker showed greater smoke. I should judge on the ordinary engine, with hand firing and working hard, that the smoke would run between 3 and 4, while with the stoker engine it was between 2 and 3, perhaps nearer 2 than 3.

C. E. Chambers (C. of N. J.): It was my privilege to make a trip on one of the Pennsylvania engines equipped with a Crawford stoker. We had a tonnage train of coal cars; there was no hand firing done at all and there was almost no smoke, except just when the stoker was placed in operation; at that time there would be a discoloration of the steam coming from the stack, but not anything that you would term smoke, such as would come from a soft coal engine. It was about the most gentlemanly job of firing I ever saw; a man could put on a white shirt, and the only evidence that anything was going on was the disappearance of the coal in the center of the tender.

As to steam pressure, you would have thought that they had fixed the pointer. I could not see that it varied one pound at any time. There was not one hitch during the entire time that we were on the engine—nothing occurred which could be considered as unfavorable to the operation of the stoker, except that possibly once or twice the coal blocked the shovel temporarily because of lumps. The tonnage was 1,700 or 1,800, but they said it would have been the same with 3,500 or 4,000 tons.

Geo. L. Fowler: Last year I gave some memoranda in regard to the operation of the Crawford stoker, and that was the reason I did not speak of it this morning. At that time I compared the smoke coming from the Crawford stoker to the average conditions of the Pittsburgh atmosphere. I rode the engine from Pittsburgh to Crestline, and there was no smoke whatever; when I returned I was asked how the steam pressure ran, and I said I did not know; that I thought they must have been monkeying with the gage, because the pointer did not move throughout all the trip.

D. F. Crawford (Penna.): We have made all told 2,000 trips with the stoker. Of these about 1,600, representing very roughly 160,000 miles, have been made with what might be called the improved stoker. There are at phesent about 20 locomotives equipped. There are 19 in regular service and we have 10 or 12 more under way. The stokers have all been applied, with the exception of three, to H-6 consolidation locomotives. Two of the stokers are placed on a larger consolidation locomotive and one on a switch locomotive.

The stokers up to three or four months ago were in the hands of regular crews; in some cases a man rode with them. He was called a stoker instructor, and was simply a fireman who had been taught what the different parts consisted of and what was expected to be done with them. It was his duty to teach the other firemen how to handle the stoker. About three or four months ago five or six of the locomotives were assigned to one division and were turned over to the pool. Out of 1,500 or 1,600 trips that the latest stokers have made, about 800 of them have been 100 per cent stoker fired; that is, no coal was put in by the shovel at all. One thousand trips have been about 90 per cent stoker fired or over, and the average of all trips is somewhere about 90 per cent.

The stoker has been on the testing plant at Altoona. We have made a number of tests with the Salinville coal, which we use regularly, and we have succeeded in firing 6,300 pounds of coal per hour. We have fired that successfully and maintained the steam pressure with it; the performance was in every way satisfactory. I agree fully with the conclusions of the committee as to the desirable points of the stoker. I disagree with Mr. Sechrist, who said that the conveyor should not be used. The stoker is not complete unless it does the whole job. The first stokers that we had were without the conveyor, and they did not appeal to me as meeting the situation.

Something has been said about coal economy. From the results obtained on our testing plant I think we will do as well, or even better, than the best hand firer. On some of the tests that we have made the stoker has shown conclusively that it will save coal as compared with the average hand firing. However, I do not look to coal saving in itself as being the important point of the stoker. To me the important point is to be able to rate your locomotive not on the size of the cylinders, but on the pounds of coal that it burns. Our consolidation locomotives are probably using from 3,000 to 4,000 lbs. of coal per hour in regular service of a continued run. We want to rate those engines at 5,000 lbs. of coal per hour, and make the train behind the engine a 5,000 lbs. of coal per hour train and do what such a train ought to do. We do not have to build any heavier or bigger engines. All we have to do is to burn more coal and use the engine that we have up to its adhesive ratio.

One of our consolidation locomotives was put in switching service in one of the large cities where they have a smoke inspection bureau in operation with well trained observers.

One of these trained observers took notes and made observations of this engine at different times for a period of 40 hours. He made a total of 9,754 smoke observations, of which 9,550 were No. 0; 570 were No. 1; 20 were No. 2; 10 were No. 3, and four were No. 4. In other words, 8½ per cent of the smoke was eliminated on this engine engaged in switching service. One difficulty is that west of Pittsburgh we use the Ohio coal, and east of Pittsburgh the coking coal, and we have had some little difficulty with the latter.

C. F. Street: I have put 10 of these machines in service. There are two or three matters on the general stoker situation that I would like to bring up. The first is this: The main object of putting a stoker on a locomotive is to increase its capacity. As Mr. Crawford has said, the capacity of firing is about 2½ to 3 tons per hour. With the stoker you can jump up to 5 tons of coal per hour, and with the increased capacity you at once increase your tonnage. The master mechanic of one road where my stoker is running said that if they equipped their locomotives with the machine he would be able to increase the hauling capacity of the locomotives from 15 to 20 per cent. That is the key to the whole proposition. You get a stoker that will do that and the question of fuel economy immediately becomes secondary. You can afford to burn considerable more coal per unit of work. Another point is the increased speed that the locomotive is able to attain. It will work on grades which the hand-fired locomotives cannot. I can put any kind of stoker on a locomotive and it will run at a speed of 20 to 30 miles an hour, with any kind of tonnage, and work like a watch. Load the locomotive down with all it can haul, bring it to a grade and slow down from 5 to 8 miles an hour, and you have a very different proposition. The stoker for passenger locomotives looks so easy that it seems to me a shame not to use it, as the conditions are ideal.

There is no question but what the scatter type of stoker will do. By applying it a great deal of the smoke will be eliminated. A great part of the trouble is that your firemen are not given full and definite instruction as to how to use a stoker. There is no piece of machinery that you put into the hands of a man and do not give him some sort of instruction as to its use. I have put stokers in where the fireman has never seen one before. Of course, you furnish the fireman a pamphlet descriptive of the stoker, but how many of the firemen read it. These men should be given full instructions. You would not think of putting a man on a train to handle an air brake without giving him instructions. Look at the schooling that you put your engineers through before they are allowed to run a locomotive. When it comes to the stoker it is going to be necessary to have some man, or have a department, or a set of men, who shall make it their business to instruct the firemen in the proper handling of the stoker.

The question of whether the crusher shall be on the tank or not is very material. I am building a machine now that will take the coal by a conveyor from the tank, and put it into the firebox without the use of a crusher.

I made up my mind that a stoker in order to be successful would have to handle any quality of coal that was given it, and take anything from poor slack to the best lump coal. Here is an excerpt from a report from a railway company that had a man on an engine watching the operation of the stocker: "We received 1,700 pounds of coal, only 5 per cent lumps; the slack was composed mostly of sand and mud, and we could easily make a mud ball of this coal, but still the engine done well on it." The keynote of this whole question is increased tonnage and increased speed.

M. H. Haig (A. T. & S. F.): I did not intend to say anything on this subject because my experience is not at all complimentary to the stoker, and I have found it quite difficult to believe my ears this morning. I might give you a history of its operation on the Santa Fe. Three types have been applied on locomotives operating through a territory where the ruling grade is about .6 of one per cent. Every opportunity has been given to the stoker representatives to instruct the firemen.

Mr. Fowler claims that the coal should be selected to suit the stoker. I do not think that is practicable. The stoker must be selected to suit the coal. The three stokers we have in operation are the Hanna, the Street and the Strouss. In hand firing these locomotives they used about 14 tons of coal per 100 miles. They hauled about 2,000 tons, largely in refrigerator cars, and it was found that the stokers—especially the street and the Hanna—required from 18 to 20 tons over the same distance. The stokers have made very few trips without having to run for coal. The Strouss stoker has been more successful in respect to economy. However, the firemen claim that they have to work as hard using these stokers as they did in firing by hand because of the labor required in lifting the coal up to the hopper. The Strouss stoker is a noisy appliance, and not a very pleasant device to have in the cab, but it has done the work. The trouble with the Hanna and Street stokers has been that they bank the coal near the back end of the firebox, and that has caused some trouble.

As to providing coal suitable to the stoker, at the request of the Hanna representatives different kinds of coal were provided; the firemen were given lump coal and slack coal. It was claimed that the lumps were too large, and they were given slack coal, and it was claimed that there was trouble with that—that it banked.

J. F. Devoy (C. M. & S. P.): I have just completed a year's experience with the Strouss stoker, and as I have nothing complimentary to say about it, I am not going to say anything at all about the stoker. I agree with Mr. Crawford that a conveyor is an absolute necessity for the reason that it will lessen the work of the fireman. The actual work involved in lifting the coal is 50 per cent more when firing with a stoker than when firing by hand. A conveyor on any sort of a stoker is thus an absolute necessity. My real object in rising to speak at this time, however, is to question the Ringlemann chart system. In Chicago it is almost an absolute impossibility to live up to the smoke law. The Ringlemann chart was never intended to be used for any such purpose; it was gotten up originally by an eminent engineer for the purpose of judging a smoke from a factory stack, in which there was no mixture of steam, and it should only be used for that purpose. The greatest amount of smoke emitted from a stack is usually at the starting of the engine. The greatest amount of steam is mixed with the smoke when the greatest amount of work is done, or when the greatest amount of coal is burning. Therefore, the Ringlemann chart is misleading in judging the smoke or the color of the smoke emitted from a stack, due to the fact that you are judging 75 per

cent steam and not smoke. The committee should define at what time the Ringlemann chart would be used, for it is misleading.

As to whether a stoker will save coal or not, the results of out one year's experience show that hand firing saved 9 per cent over firing by a stoker.

C. F. Street: You say that by hand firing you save 9 per cent in coal. Was the speed at which the machine was operating taken into consideration in arriving at that conclusion?

J. F. Devoy: My remarks are based on our experience of 12 months in which an exact record of the coal consumed was kept; that is, the average performance of the locomotive in both directions over a single division. The figures were 10.71 pounds per 100 ton miles for the stoker fired locomotive and 10.54 pounds for the locomotive not equipped with a stoker.

W. C. Hayes (Erie): My views have changed somewhat from those I expressed at the last convention. I said then that I did not think stoker firing could be compared in any way with hand firing, and that if we undertook to expend the same effort in educating the firemen that we did in developing the stoker we would get better results, which would more than overbalance anything that could be obtained from mechanical stoking. Since that time the development of the stoker on the Erie has brought about a change in my opinion, and I think now that perhaps we are on the right track to enable Mr. Rumney to say that he will be able to complete his report to this association in a satisfactory way by the time of the next convention and show a stoker that will deliver the goods.

E. W. Pratt (C. & N. W.): I would like to ask those who have had most experience with mechanical stokers what is the low limit per hour in the amount of coal to be supplied the fire box. What would they recommend in that respect? Dould it be 4,000 or 3,000 lbs. per hour? Below what point would they consider it inadvisable to apply mechanical stoking?

D. F. Crawford: I have not worked on the low limit. I have been working on the high limit, trying to raise it all the time. As I understand Mr. Pratt's question, be asks whether it would be economy to put a stoker on a locomotive using a comparatively small quantity of coal. We have not, because we do not expect to have locomotives in service, except perhaps small switching locomotives in service, except perhaps small switching locomotives, where we would apply the stoker from the smoke preventive viewpoint. In all the cities through which our lines run there are now smoke ordinances. I would not recommend putting a stoker on a light passenger engine.

J. F. Devoy: The daily record of our trains that I referred to shows a consumption of 3,500 lbs. of coal per hour. This is equivalent to 72 lbs. of coal per square foot of grate per hour.

Mr. Steele (American Locomotive Works): I think where the coal consumption runs above 5,000 lbs. of coal per hour a mechanical stoker would greatly relieve the labor of the fireman, and would permit an increase in the work of the locomotive.

C. E. Gosset (M. & St. L.): The Strouss stoker will do well when it is working. We have had numerous troubles due to its failing and found it necessary to discontinue our experiments because of the number of failures that we experienced. As long as we had the stoker in the hands of a regularly assigned crew who were thoroughly familiar with its different parts and how to take care of it we obtained very good results, but when the machine was turned over to a different crew our troubles began and finally they became so numerous that we discontinued our experiments.

M. H. Haig: I would like to ask some questions of those gentlemen who have operated stokers successfully. Have they ever had any trouble with the Hanna and Street stokers banking the coal under the door? Have they ever had any trouble with particles of the coal being carried through the flues and out of the stack? Did they have to provide a special quality of coal? In the case of the Street stoker I do not think it is necessary to provide a special coal.

T. O. Sechrist (Q. & C.): We use the regular nut and slack when we can get it. We take by preference about 90 per cent of slack. The crews prefer the slack coal, as they claim that makes them less trouble. As far as carrying the fine particles of coal through the flues is concerned, I believe that is all due to the handling of the blast. If you use high pressure blast, of course it occurs. We had that trouble at first, but we have overcome it, and I have not heard a word of complaint on any engines that we now have equipped with a stoker.

We have not experienced any trouble due to the banking of the coal around the fire door; I have made at least 100 trips with the stoker and have not observed any trouble of that kind.

J. Christopher (T. H. &B.): What is the experience of those using the stoker as to the front end filling up, as compared with hand firing? Is it necessary to clean out the front end more frequently?

The March to the Ball Grounds, Atlantic City, N. J., June 17, 1911.

T. O. Sechrist: We have been using the stoker for the past 14 months, and at first we did experience that trouble. We have had no trouble along that line lately. We have not had any occasion to inspect engines on account of the filling up or on account of coal being drawn through the tubes, and we have watched that matter pretty closely, thinking that perhaps the coal might bank up around superheated pipes.

G. A. Hancock (St. L. & S. F.): Regarding the Street stoker, I would say that we have had a great deal of trouble of the same nature that Mr. Haig spoke about. I think possibly 10 per cent of the trouble is caused by faulty firing, and the minute the fireman becomes accustomed to the stoker it works better. We have had some smoke trouble on heavy service, but on light service it has been comparatively small.

C. F. Street: In answer to Mr. Haig's query regarding coal going through the flues to the stack. On my first machine I had a great deal of trouble with the coal being carried through to the stack unconsumed. As I said before, the first machine I ever built is now here on the pier, and it has a screen for screening the fine coal out and depositing it across the back end of the grate, where it does not get into the fire-box. I have two of these engines working. On the question of banking, I have put in a division across, so that the rolling of the locomotive has no effect on the distribution of the coal in the fire-box, and I am arranging to rebuild the machines that I have out and put this device in them. The experience that I have had with these machines shows that the two points of difficulty pointed out will be entirely eliminated.

Agnus Sinclair: A very important point in locomotive operation is the condition of the flues. If the mechanical stoker has a tendency to cause more flue trouble than is experienced with

hand firing, or the reverse, why, it is very important. I suppose those who have had experience with stokers are able to tell whether there is less flue trouble, or more flue trouble using mechanical stokers than there is in hand firing.

T. O. Sechrist (Q. & C.): We have had no flue trouble with our stokers, but we have had with all our locomotives that are not equipped with mechanical stokers.

D. F. Crawford: My experience is favorable to the use of stokers. We find very little difference between hand stoking and mechanical stoking, but whatever difference there is between the two is in favor of the mechanical stoker. Our flue troubles are not the flue troubles that we used to have. There is nothing like so much flue trouble or flue leakage today as we had formerly. I am afraid to say whether it is due to the stoker or due to the difference in practice in our engine houses, but I am inclined to think it is due to the latter.

T. Rumney: Mr. Sechrist expressed the opinion that a conveyor is not necessary, and that it is a very small matter anyway. All I can say about that is that I wished we had found it to be so. We have been four years trying to get a conveyor, and we are only able now to say that we have a conveyor. I think Mr. Street has had some trouble, and I am sure Mr. Crawford has had from what he has told me in the past. Some of the tests that have been made show that we got within 1.2 per cent economy, taking time into consideration. That is, we considered the work, checked by the dynamometer horse power, and by fuel hours, per ton mile. The committee took into consideration the fuel burned and gave credit to the locomotive for the tonnage drawn in a given time or in a given distance.

The reference that Mr. Crawford made to the rating is precisely the line upon which the committee has been viewing the question; that is, making the modern locomotive better and more powerful, and not seeking to economize in fuel consumption in order to make a good showing on a fuel basis, but figuring on a ton mile basis; and, on a ton mile basis, it is almost equal to hand firing. Of course, in every case, the hand firing was fairly good, and the stoker was new.

All the experience that I have had with the mechanical stoker shows that there is very little smoke either with a scatter, Street, Hayden, or Dickinson type, and I know that the Crawford stoker is nearly smokeless.

In respect to the reference that has been made to the underfeed stoker and the scatter feed stoker. There might be some advantage in the scatter feed type in that the smoke would always be visible, more or less. But I do not know about this, as we have not made any experiments in that line.

BEST CONSTRUCTION OF LOCOMOTIVE FRAMES.

T. H. Curtis (L. & N.): I cannot give you any light on how to construct frames to keep them from breaking, but I will mention that the Louisville & Nashville have 150 consolidated locomotives with the Stephenson link motion. These locomotives were not troubled with frame breakage, but we built some fifty or more locomotives with the same frame, the locomotives are practically interchangeable, except that these last engines were equipped with the Walschaert valve gear. We have been troubled a great deal by the breaking of the left frame near the front pedestal in the case of these engines. I have looked the engines over and cannot see any reason for the breaking of the frame. It breaks in a very strong place, and everything seems to be in a good condition, and I know that the engines are well kept up. In fact, the engines equipped with the Walschaert valve gear receive the same care as those equipped with the Stephenson link. Therefore, I attribute the trouble to the Walschaert valve gear. As to why it should cause this breakage of frames I cannot give any reason.

I will also say that of the engines that have the Stephenson link, that there were about 25 of them that had a very large plate bolted on the back of the cylinder and extended backward about four or five feet. We had a great deal of trouble with these frames breaking until we removed the plates, until we removed what made the frames stiff we had trouble.

In designing locomotive frames we have always used at least 2.5 in. of a lip on the bottom of the inside to hold the binder up tight. I think this is important, to hold the binder and the frames solid together, and it is necessary to stop the breakage of frames. I have found someone believed in the binding question to such an extent as to have the binding extend the whole length of the frame. As long as we have locomotives we will have the breakage of frames, as they will wear out, but I believe with proper bracing and care, by keeping the engine up, by giving it proper attention in the roundhouse, we will save ourselves a great deal of frame breakage.

H. T. Bentley: We have had a number of engines on our road, not very heavy, ten-wheel freight engines, but have had a tremendous lot of trouble with the Stephenson Link engines breaking their frames, and we had a number of Walschaert valve gear engines, same general type and same size frame, but with the addition of cross bracing between the frames, and since that time we have not had a single case of frame breakage with that particular engine. It has been in service five or six years, and it would begin to show some difficulty, if difficulty was likely to be experienced.

We have an extract in our report from an engineer of the Italian State Railways. He is trying the plate frames, the bar frames, and he states conclusively that the bar frames has some advantages over the plate frames, namely, that it is easier to manufacture, more convenient to erect, very much easier for inspection, and generally speaking the American Standard bar frame is preferable from every standpoint. I think where the committee has gone on record to say that a good deal of the trouble of frame breakage is absolutely preventable should lead the steel manufacturers to get together and see if they cannot do something to help the situation out. The use of cast steel for frames is very satisfactory, if we can get good steel castings, and get them properly annealed.

R. L. Ettinger (So.): We have a great many cast steel frames which have been satsifactory. Probably as many as 250 of the heavy engines have cast steel frames, with an alloy in them, and with these frames we have not had any breakage at all. Some of the simple engines have had the frames broken. We have not had any epidemic of broken frames.

E. W. Pratt (C. & N. W.): How long have the 250 frames been in service?

Mr. Ettinger: About six years, the oldest of them. The first, I think, we got about six years ago.

Wm. Forsyth (Railway Age Gazette): Since the committee has come out definitely in favor of cast steel frames, it seems to me that there ought to be a good specification for the casting, just as Mr. Bentley said. This specification of 1904 is for a low-strength steel. It is a steel whose chemistry and strength correspond very closely with ordinary boiler steel. It is soft. The committee further recommends as preferable to this the specification of the American Society for Testing Materials, which has a strength 5,000 lbs. greater. Now that specification of the Amercian Society for Testing Materials is one which applies to steel castings generally. It is not specially for locomotive frames, and I believe it would be a good idea if the association was to request the American Society for Testing Materials to investigate this subject and have a committee frame a special specification for cast steel locomotive frames and present it to this association. If it is in order, I will make that as a motion.

The motion carried.

R. D. Smith (B. & A.): We have had considerable trouble with steel frame breakages on consolidation type engines with narrow fire-boxes, and we have lately come to the conclusion that the trouble has been not so much in the vertical stresses as the horizontal stresses, due perhaps to the long overhang and the fact that the breakages all occurred through the bolt holes. It is usual, when we have troubles of that sort, to think if we had a little more material in the frame it would be better, and we have added a little more material top and bottom, and we have gone to adding some on the side, to better bracing, and we have used the frame as recommended by the committee. Just what the results of this will be we do not know yet, because we have just changed our patterns and ordered our first set of frames which have been strengthened in this way, but it has been my thought that the failures were caused by the horizontal stresses due to the excessive overhang in some of these frames. I quite agreed with what Mr. Forsyth has said, that we should have some specifications for steel for frames, and we have also gone over the rules as recommended by the committee on page nine, and we quite agree with them.

J. Christopher (T. H. & B.): It would appear that the question of the quality of the steel is the chief point. It occurred to me it would be a good idea for them to determine the radius of the gillets at the pedestals and consider those points in making their recommendations, as well as the quality.

C. A. Seley (C. R. I. & P.): The most perplexing frame breakage which has occurred to us lately is in the forward pedestal on the Pacific type engine, new engines, massive frames, massive binders, everything put up in good shape, and we have had a number of breakages starting from the rods, extending upward, a perfectly straight break, through to the inside of the jaw, through six or eight inches of solid metal, apparently. It is a perfectly clean break. Why they should break, I cannot figure out.

R. D. Smith: I believe that a well designed steel frame will not break if the boxes, wedges and shoes are kept up. If more attention is given in the roundhouse to keeping up these features that go to hold our frames together, like the binders and bracing, we will not have so much trouble with them.

B. P. Flory (N. Y. O. & W.): We have a lot of fifteen simple engines, and in the case of every one of these engines we have had broken either one or both of the frames on the top rail underneath the rocker bars. We came to the conclusion that the cause of the frames breaking was the probability of their not being sufficiently braced. They did not have the frame bracings on the bottom rail at all, and we put one on there and since that time we have not had any of them back.

I was very glad to see the committee recommend the cast steel one-piece frame. I note, however, on page 7, that the committee says, "But on slide-valve engines it is usually necessary to resort to a two-piece frame, because of lack of strength at cylinders." That has not been my experience, as for probably four or five years I have used the one-piece cast steel frame in the slide valve cylinders and have had practically no difficulty with it.

E. W. Pratt (C. & N. W.): If there are any of the members who find it necessary to make a two-piece frame, a vertical splice would give very much less trouble from breakage than a horizontal splice. The splicing bolts at that point give us a great deal of trouble, and I have heard others say the same.

Mr. Chambers (C. of N. J.): We have not had any trouble at all, which you would term serious, in frame breakages for several years. We had a type of twelve-wheel locomotive, 105 tons, and it gave a great deal of trouble from frame breakages

right over one box, but we designed a cast steel section, cut off back and forward of the pedestal, and have had no trouble with the rest of the frame anywhere. Out of possibly fifty-one locomotives, we may have had 35 breakages on the right side, and may have had only one on the left, so it was not necessary to put a cast steel section on the left side.

We have ten heavy locomotives, equipped with the Walschaert gear, which have been in service, I think, for about four years. We have not had any frame breakages in any of these engines, and I was a little surprised to hear Mr. Curtis say that in his opinion the Walschaert gear had anything to do with the trouble. I think more than likely it is due to frame construction. These engines had better frame bracings than the link motion engines. That might have had something to do with it.

T. H. Curtis: I ask Mr. Chambers if the engines were both framed on the right hand side? I wish to call attention to my remarks to the engines with the Walschaert gear, in which the frames were broken, that it was only the right hand frame in these engines which were broken, and not the left.

Mr. Chambers: They were in all cases the right hand lead.

C. D. Young (Penn.): We had a great deal of trouble with the breaking of frames on consolidation locomotives, the same size as Mr. Chambers' engines to which he referred. They were equipped with the Stephenson gears. On the lines West I think there were about 400 engines, and the frame breakages ran up to over a thousand. We followed them in 1906 with the outside gear engine, identical in every respect, excepting the gear, frames the same section, but being cross braced, the idea being to carry the cross bracing from the cylinders just as stiff as you could to the ash pan, and outside of manufacturers' defects and poor castings, I believe we have not had a broken frame which could be attributed to poor construction. I believe that the Walschaert valve gear has solved half of the broken frame trouble, because you can cross brace frames, making a rigid structure back of the cylinders, and tie the two frames together, reducing the lateral vibration.

Mr. Pratt suggested the vertical splicing in preference to the horizontal splicing. We had so much trouble on the first consolidation engines that we made a number of experimental designs to increase the horizontal splice. That did not seem to do much good. The frames still broke, it simply carried the break a little further back. Most of the earlier breaks were right at the splice, ahead of the front driving box, and when we increased the weight of the splice it went over back in the frame and broke over the front driving box, or between the front driving box and the intermediate wheel. We built the splice ahead of the front drivers, a vertical splice, using about twenty-four short bolts. We have about twenty of these engines running, they have been running about three years, and none of the frames have broken.

J. F. Enright (D. & R. G.): We are not experiencing the trouble with broken frames which the other roads seem to be. It is possibly due to the fact that our engines come in for class repairs oftener than engines operated on level roads. Our three, four and five engine trains make the operation severe on the train engine, or the engine ahead of the train engine. Judging from our experience the one-piece frame for the piston valve engine is, in my opinion, the best design of frame that has been put on a locomotive. We have a number of that design in passenger service with the Walschaert gear, and, with one exception, I do not recall a broken frame on these engines. And that exception was the main pedestal, just about midway between the binder and the top of the frame, at the back end or the wedge side.

T. Rumney (Erie): We have tried to do everything that has been recommended by the Association from time to time, and we have conferred with the builders of locomotives in making various designs, to strengthen up and stiffen up the frames in every way that they could. We have put in large fillets, used single frame—that is, the one-piece frame—and endeavored to brace the frames as much as possible. We have some engines running that have not broken a frame in two years, and we have some types of engines running that have not broken over two or three frames in about thirty engines in about four years, but on the same type of frames, or other engines with cast steel frames have broken, so that it is pretty hard to determine where we do stand. We have some allow frames with vanadium that have run, one for four years and no trouble, and no trouble, either, with the engines built at the same time with cast steel frames—apparently we have not reached the point in the case of these engines where the breakage is likely to occur.

C. E. Chambers: I would like to add a word for the benefit of the members—on those engines in which we had the frames break, the front wheel type of engine, the frame broke just forward of the jaw. We had a splice just in front, before it touched the jaw. After a time we used a cast steel section, using the same kind of splice, and since then, about a year ago, we went further ahead, just back of the cylinder and cut-off where the frame is a single bar and made the section cover that point, and we have a one-piece frame, which has been very successful, doing away with the trouble of splicing the top.

A. E. Manchester (C. M. & St. P.): I do not see any difference between the servicability of the iron and steel frames. We have 175 consolidation engines with 56-in. wheels. The first few years that these engines were in service they were kept entirely in a moderately slow speed, but very heavy service, the engines hauling from 3,000 to 5,000 ton trains. Later on a condition developed due to the particular weight and length of these engines, and we had to transfer them to another district where the speeds were high. In the slower, heavy service we had practically no broken frames at all, but when we turned the engines over to the fast service we had a great many broken frames. We cannot entirely balance the engine according to rule, and I believe that that was one of the things that caused the trouble with these engines, the matter of gravity and high speeds.

The President: I wish to say that we have had a lot of trouble with broken frames. Most of our troubles have been with Pacific type engines. We have had consolidated engine frames break, but I do not think it makes very much difference whether they are running on a division of 200 miles, with tangent track, or on a division that has no tangent track; it seems to be about the same thing. The breakage occurred mostly in the top rail either under the guide yoke or at the pedestal or even up close to the cylinder—we have extended the top rail of the frame back from the rear of the front pedestal far enough to get it solid in back of the back leg. We have done away with the guide yoke bracket entirely, making the frame, the leg on it, as a guide yoke bracket. We have forty engines; it is true they are lighter engines and have smaller wheels, which have been in service twelve years, and we have not a record of a broken frame.

We commenced changing the Pacific type of engines to this design about two and a half years ago. We have not had a broken frame on the Pacific type of engine as equipped with this frame. We feel that the guide yoke bracket, about twenty inches high, to get the guide yoke up high enough with the cast iron bracket bolted, which was not always tight, but was frequently loose, was largely responsible for the trouble which we had.

R. W. Bell (Ill. Cent.): About ten years ago on the Illinois Central we had a great many frame breakages, and we started a systematic campaign to ascertain the way in which our engines were taken care of in the roundhouse. We found that our frames broke on the ends that were neglected, wedges that were down, wedges that were not kept in condition, brasses not taken care of, and we started a campaign of education of our roundhouse force, and after we introduced better methods of caring for the engines, our frame breakages were reduced to a minimum. I think the greatest causes of frame breakages are loose wedges. It is true that the design of the frame has something to do with it, but if the engine is kept up in a state of high efficiency, all the rods and boxes in proper order, you will find that the frame breakages will be greatly reduced. That is our experience. We have 1,449 engines, and since last July our frame breakage has been one per cent.

D. J. Redding (P. & L. E.): We had a lot of consolidation locomotives in which the frames broke at the head of the front jaw, and we came to the conclusion that the principal reason was that they had a light sheet, running from the guide yoke up to the boiler, and it was fastened against the boiler, and we would always find the bolts tieing this sheet to the guide yoke and the boiler loose on the frame of the yoke. By putting in double sheets and double anchors against the boilers and putting in a cast iron section between the top and bottom rail, ahead of the front jaw, to take up the vibrations set up by the piston thrust at the back end of the guides, we nearly eliminated the breakage of these frames, and it seemed to me if anything could be added to the report of the committee it would be some suggestion as to the proper bracing.

George W. Rink (C. of N. J.): I believe the bracing is an important part of the locomotive. I have an idea that sufficient metal is not applied vertically to the bolt holes in the braces. Where you find a bolt with anywhere from three-quarters of an inch to one inch of metal through the bracing the same should have at least an inch or an inch and a half of metal, and the frame bracing should extend from the top rail to the lower rail, so as to brace crosswise, in other words, use a brace in the shape of the letter X. I believe that would be far preferable to using a large flat brace lying on the top rail. We have found occasion to apply to engines originally built with such a brace an additional brace to the lower rail and extending a sheet from the top frame casting to the lower additional bracing. What I have just described applies principally to the front furnace supports.

I believe the use of a sheet connecting the mud ring into the supporting casting is a good idea. As far as the thickness of the sheet is concerned, I believe the thinner the sheet is the better as far as flexibility is concerned. My attention was called the other day to an eight-wheel engine that had the front jaws broken on both sides. This engine had a frame of about four by seven. It had no underhung springs. The wedge required lining up and it was neglected, and I can attribute the cause of that breakage to the fact that the wedges were not properly lined up.

We have a large number of cast steel frames in service, a number of frames made of .40 per cent. carbon steel, introduced on our latest switching engines, and as far as these switching engines go we have had no trouble. The particular engine Mr. Chambers referred to had a cross spring from one driver box to the other, and the frame was cut out a trifle on an angle, which weakened the frame at that point. When we got out the new cast steel section we added two inches to the depth of the frame at that point, and have had no trouble.

H. T. Bentley: I agree with Mr. Bell, of the Illinois Central, and Mr. Seabrook, of the St. Louis Southwestern, who report having had no trouble, due to getting a better grade of steel.

It has been stated to me that the committee has done an injustice to the vanadium steel frames, insofar that we did not state how many frames were in service when we stated how many were broken, and to try to straighten that out I will try to give the result of the information I got at the time this report was compiled: One set, none broken; five sets, none broken; one set, none broken; three sets, one broken; one Mallet, four frames, none broken; three sets, none broken; two hundred and thirty sets, none broken.

Mr. Chambers spoke of the one-piece frame eliminating the splice. I think that is the European practice. Everyone knows what troubles they have had with splices, and they have gone into the practice of making sections and welding the section in the center of the front jaw, and I think it is a good thing to do, that is the practice we are using.

New Books

PRACTICAL INSTRUCTION AND REFERENCE BOOK FOR LOCOMOTIVE FIREMEN AND ENGINEERS. By Chas. F. Lockhart; 362 pages; cloth, 5x6¾; published by the Norman W. Henley Publishing Co., 132 Nassau St., New York. Price $1.50.

This book treats in a thorough manner of the engineman's duties and how to properly perform them. It also contains practical information on: The construction and operation of locomotives; breakdowns, and their remedies; air brakes and valve gears. Rules and signals are handled in a thorough manner. As a book of reference it has merit. Through the courtesy and consideration extended by the officials of the different railways, the author has been enabled to make this a standard work, which will apply to all roads, not only in general practical and road usage, but in the knowledge required to pass a successful examination. Approximately 900 questions with answers are included in the 1911 edition.

* * *

TRAIN RULE EXAMINATIONS MADE EASY. By G. E. Collingwood; 234 pages, cloth, 4x6; published by the Norman W. Henley Publishing Co., 132 Nassau St., New York. Price $1.25.

This is a book for the instruction of all who have to do with the operation of trains. It treats of such rules and signals as are practically adopted as standard by American railways. The book explains by illustration the application of train orders, the meaning and necessity for certain rules. Recognizing the fact that nearly all railways require trainmen to pass examinations, the author has included a set of questions with answers. The signal department is illustrated in colors.

* * *

AIR BRAKE CATECHISM. By Robert H. Blackall; 252 pages, cloth, 4½x6½; published by the Norman W. Henley Publishing Co., 132 Nassau St., New York. Price $2.00.

This book is a standard publication on the air brake, written by a well known air brake man. It is a practical and complete study of the air brake, including the E-T locomotive brake equipment, the K (quick service) triple valve for freight service, the Type L high-speed triple valve, and the cross compound compressor. The operation of all parts of the apparatus is explained in detail and a practical way of locating their peculiarities and remedying their defects is given. The book is divided into chapters, and the author treats each subject in its simplest form; then by progressive steps covers the more intricate parts of the subject, thus making the book valuable to the student, as well as to the man already advanced in knowledge of the air brake. Trainmen and engine crews will find special and practical assistance in their work under the subject, train handling and train inspection. The 1911 edition contains approximately 2,000 questions with answers.

LOCOMOTIVE BREAKDOWNS. By Geo. L. Fowler, revised by Wm. W. Wood. 292 pages, flexible cloth, 4½x6½ ins. Published by the Norman W. Henley Publishing Co., 132 Nassau St., New York. Price $1.00.

This is a book for the engineer, fireman and shop man. Necessarily somewhat elementary, it is nevertheless very useful to the man well acquainted with locomotive maintenance and operation.

One of the best things in the book is the questions and answers on the air brake. This chapter has been entirely rewritten. Up-to-date in every detail, it tells how to avoid mistakes and ill-results in operating the brakes of freight and passenger trains, and how to guard against, as well as remedy, troubles of the improved E T engine and tender brake equipment.

THE PRINCIPLES OF SCIENTIFIC MANAGEMENT. By Frederick W. Taylor; 144 pages, cloth, 5½x9 ins. Published by Harper & Brothers, New York City. Price $1.50.

One of the most interesting features which the author has incorporated in this work is the frequency of most lucid illustrations by relation of incidents. Mr. Taylor, in the workshops of Philadelphia and elsewhere, has been working on his system for thirty years. In this book is, in reality, the birth of a new science—one which will go far toward revolutionizing present business and industrial methods. Wherever it has been adopted thus far, it has wholly changed the relationship of the employer and the employe, and it has produced greater profits to the owner and more wages to the worker. Mr. Taylor believes that the man is the main thing in industry. He believes that attention should be fixed upon the exact point of contact between man and nature—which is the point of life and of production and of artistry. With the vast expansion of industry which has been going on it is, of course, impossible to return to the old, intimate personal contact of employer and employe which resulted in highly skilled and efficient production. For that old rule-of-thumb, rough-and-ready relationship Mr. Taylor would substitute a science of management, based upon a thorough-going, scientific study of the man at his job. He would establish standard of human labor; he would record the rules and define in exact terms every industrial activity. He says in his introduction: "In the past the man has been first; in the future the system must be first. This in no sense, however, implies that great men are not needed. On the contrary, the first object of any good system must be that of developing first-class men; and under systematic management the best man rises to the top more certainly and more rapidly than ever before."

The object of the work is to point out, through a series of simple illustrations, the great loss which the whole country is suffering through inefficiency in almost all of our daily acts. To try to convince the reader that the remedy for this inefficiency lies in systematic management, rather than searching for scome unusual or extraordinary man, and to prove that the best management is a true science, resting upon clearly defined laws, rules, and principles as a foundation. And further to show that the fundamental principles of scientific management are applicable to all kinds of human activities, from our simplest individual acts to the work of our great corporations, which call for the most elaborate co-operation. And, briefly, through a series of illustrations, to convince the reader that whenever these principles are correctly applied, results must follow.

The Arms Horse Palace Car Company, Chicago has ordered 25 special cars from the Pullman Company.

The Louisiana Southern is reported in the market for passenger cars.

The Baltimore & Ohio is in the market for 4 dining cars and some baggage and postal cars.

The Chilean State Railways has ordered 288 freight cars from the Middletown Car Works.

Personals

P. E. Bock has been appointed general superintendent of the Gulf, Texas & Western Ry., with headquarters at Jermyn, Texas, succeeding F. J. Bechely.

W. E. Lee is purchasing agent of the Lake Charles Ry. & Navigation Co., succeeding W. D. Hoover. Office at Lake Charles, La.

J. T. Robinson, formerly master mechanic of the Seaboard Air Line at Jacksonville, Fla., has accepted a similar position with the Missouri Pacific.

H. A. Fennerty, purchasing agent of the St. Clair Terminal R. R., Pittsburg, died during the early part of July.

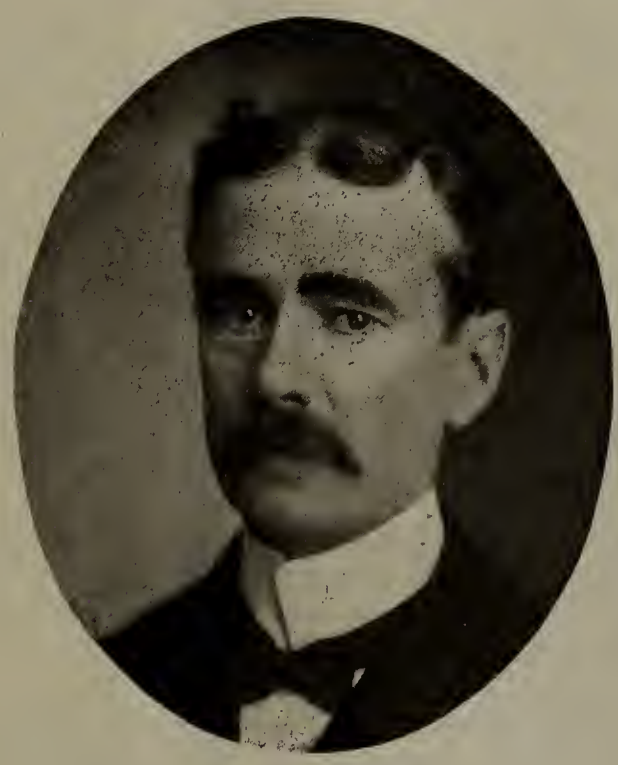

C. F. Giles.

Henry Marsh.

T. H. Williams succeeds W. J. McGee as master mechanic of the International & Great Northern at Mart, Texas.

F. R. Blunt has been appointed superintendent of the western division of the Chicago Great Western R. R., with office at Clarion, Iowa. He succeeds C. E. Carson, who is transferred to St. Paul to fill the vacancy caused by the resignation of G. W. Vanderslice.

F. A. Linderman has been appointed district superintendent of motive power of the New York Central & Hudson River R. R., with headquarters at Oswego, N. Y., succeeding J. O. Bradeen, resigned. Geo. Usherwood succeeds Mr. Linderman as supervisor of boilers at West Albany, N. Y.

S. H. Lewis has been appointed assistant superintendent of motive power of The Virginian Ry. with office at Princeton, W. Va. R. E. Jackson succeeds him as master mechanic at Victoria, Va.

D. M. Knox, formerly mechanical engineer of the Missouri Pacific, has been appointed mechanical engineer of the St. Louis & San Francisco with office at St. Louis.

F. M. Liston has resigned as purchasing agent of the Ocean Shore R. R. and purchasing will hereafter be done by L. H. Landis, general manager, San Francisco.

R. H. Lanham has been appointed master mechanic of the Missouri Pacific at Popular Bluff, Mo. G. W. French, formerly master mechanic at Ferriday, La., has been transferred to Paragould, Ark. Succeeding Mr. French, W. A. Curley has been appointed a master mechanic at Ferriday, La.

C. F. Giles succeeds Theodore Curtis as superintendent of machinery of the Louisville & Nashville R. R. at Louisville, Ky. E. S. Hedgcock has been appointed assistant to superintendent of machinery and C. H. Rae assistant superintendent of machinery, both with offices at Louisville, Ky. M. F. Cox succeeds Mr. Stearns as mechanical engineer at Louisville, and A. A. McGregor has been appointed master mechanic at Howell, Ind.

Chas. Gradt succeeds D. G. Grant as chief carpenter of the Chicago, Milwaukee & St. Paul at Savannah, Ill.

F. W. Brown has been appointed superintendent of the St. Louis-Louisville lines of the Southern Ry., succeeding C. C. Coffee. Headquarters at Louisville, Ky.

Incident to the retirement of Theodore N. Ely as chief of motive power of the Pennsyivania lines, the office has been discontinued and the following changes have taken place: A. W. Gibbs has been promoted to chief mechanical engineer with office at Philadelphia, Pa., R. N. Durborrow has been appointed general superintendent of motive power at Altoona, and R. K. Reading succeeds Mr. Durborrow superintendent of motive power at Altoona. W. B. Ott, assistant engineer of motive power, has been appointed master mechanic at the Trenton, N. J., shops succeeding H. H. Maxfield. M. J. Davis succeeds Mr. Ott at Altoona.

Henry Marsh, general car foreman of the Baltimore & Ohio Southwestern, has resigned that position to became general car foreman of the Iowa Central with office at Marshalltown. Mr. Marsh has been in the employ of the Baltimore & Ohio Southwestern for the past sixteen years, and for the last seven years has been general car foreman at Washington, Ind.

W. W. Calder has been promoted to general car foreman of the Baltimore & Ohio Southwestern with office at Washington, Ind., succeeding Henry Marsh.

CHIEF INTERCHANGE CAR INSPECTORS AND CAR FOREMEN'S ASSOCIATION.

The 12th annual convention of the Chief Interchange Car Inspectors' and Car Foremen's Association will be held at Toledo, Ohio, August 22-24 inclusive. The prospects are good for an unusually large attendance and it is expected that the discussions will be correspondingly interesting and valuable to those concerned.

Henry Boutet, who for years has performed the duties of president of this association, has stated his intention of retiring. His faithful service in the interests of his colleagues has made the subject of his retirement a very distasteful one, and it is hoped that he will once again yield to persuasion and accept office for another year.

A complete report of the convention will appear in a later issue of the *Railway Master Mechanic.*

Among The Manufacturers

NEW LITERATURE.

The American Abrasive Metal Co. of New York City has published a pamphlet which tells about "Feralun." This metal is a product used in the making of castings, giving them greater resistance to abrasion.

* * *

"Long green seems to be the popular color this season," says the Graphose Age. Incidentally it occasionally mentions the products of the Chicago Bearing Metal Co. of Chicago.

* * *

The Armstrong Bros. Tool Co. of Chicago has issued a catalogue of dogs and clamps, and another on ratchet drills. The Armstrong people make a specialty of these articles as well as of many other small shop tools.

* * *

The Ansonia Brass and Copper Co. of New York has published a booklet descriptive of Tobin bronze. It contains many testimonials.

* * *

Westinghouse Engine Driven Direct-current Interpole Generators—Type Q, Circular 1194, is the title of a new publication recently issued by the Westinghouse Electric and Manufacturing Co., East Pittsburg, Pa. The circular is well illustrated and contains valuable information on the advantages of interpole construction and this entirely new line of standard direct-current generators, which has just been put on the market.

* * *

"Safety as Applied to Grinding Wheels" is the timely title of an attractive booklet just published by the Norton Co. of Worcester, Mass. The subject of accident prevention is of interest to everyone connected with shop operation, and there is much of interest in this publication of the Norton Co.

* * *

The Pilliod Brothers Co. of Toledo, Ohio, in a recent pamphlet give a clear and concise description of the Pilliod valve gear, together with numerous diagrams and photographic reproductions.

* * *

Mesta Machine Co. of Pittsburg has made arrangements with Haniel & Lueg of Dusseldorf, Germany, for the exclusive right to build their steam-hydraulic forging presses for the United States and Canada. These presses are carefully described and illustrated in a recent booklet of the Mesta Co.

* * *

A foundry catalogue of melting furnaces has recently been distributed by the Monarch Engineering & Mfg. Co. of Baltimore, Md. It includes crucible tilting and non-tilting furnaces, stationary furnaces, melting furnaces, core ovens and positive pressure blowers.

* * *

"Metallic Flexible Pipe Joints" and "Franklin Automatic Driving Box Lubricator" are the titles of two booklets issued by the Franklin Railway Supply Co. of New York. The one on flexible pipe joints is of particular interest to those connected with the operation of Mallet engines. Both booklets are very well illustrated.

* * *

The Flannery Bolt Co. of Pittsburg has published a booklet on the Tate flexible staybolt, which, as the title suggests, gives more light on the breakage of staybolts. It contains, among other interesting matter, a paper by D. R. MacBain given before the New York Railway Club. The booklet is a decided credit to the company.

* * *

Schumacher & Boye of Cincinnati has issued a catalogue of engine lathes. A dozen or more different styles and sizes are shown, varying in size from 18-inch to 48-inch. Complete descriptions of each lathe are given.

* * *

"Planers" is the title of a recent booklet of the Niles-Bement-Pond Co. of New York. It contains some half dozen pages of subject matter in clear, readable type, and the remainder contains a number of large and remarkably clear photographic illustrations.

* * *

To the car builder especially, a booklet on car curtains and fixtures by the Curtain Supply Co. of Chicago should be of particular interest. It shows a complete line of curtains, rollers, diaphragms and fixtures and contains forty-five pages.

* * *

A pamphlet recently issued by the Ideal Automatic Mfg. Co. of New York describes very fully the packing and lubrication of air pump rods by means of "Ideal" packing.

* * *

"A minute saved means a mile of travel" is the title of a recent booklet of the Pneumatic Jack Co. of Louisville, Ky. It describes the Taylor pneumatic jack, a jack which is operated by air from the train line.

* * *

The T. H. Symington Co., Baltimore, Md., has recently published an attractive booklet illustrating and describing the Farlow draft rigging. It is entitled "Two Yokes in Transportation," and enumerates concisely thirty "Farlow Facts" which are of interest to motive power and transportation department railway officials.

* * *

"Furnace stoker proofs" being a list of "repeat" orders recently given the American Stoker Co. of New York, has just been published. As the booklet says "Repeat orders are the proof."

* * *

The Nickel-Chrome Chilled Car Wheel Co. of Pittsburg has issued a booklet giving a summary of chemical, mechanical and service tests of its nickel-chrome car wheel.

* * *

A very attractive piece of trade literature has been issued by the Mesta Machine Co. of Pittsburg, Pa. It takes up the Mesta double-acting, four-cycle gas engine and a number of interesting comparisons are made between gas and steam plants, the conclusion showing the net heat efficiency between engine and coal pile of the steam engine to be 8½% as compared to an efficiency of 18½% for the producer plant.

* * *

The Carnegie Steel Co. of Pittsburg has issued two booklets on the subject of mine timbers, one containing data and table for the use of mining engineers and the other containing a large number of photographs of mine work.

* * *

A catalogue has been issued by the Reno-Kaetker Electric Co. of Cincinnati giving information and illustration of the Reliance motor-driven swing saw.

* * *

The American Steel Foundries of Chicago has issued a very attractive booklet on the Davis cast steel wheel. It is deco-

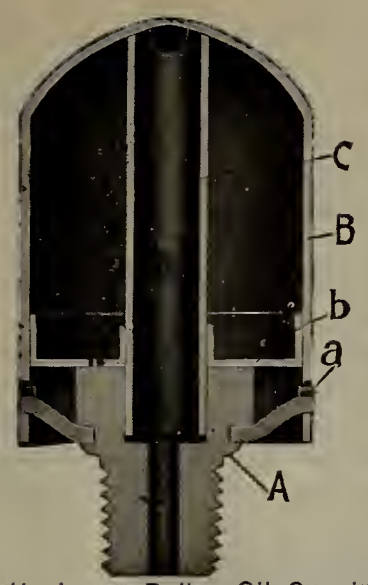

Fig. 1.—Automatic Loose Pulley Oil Cup in Cross Section.

rated with a number of suggestive sketches and with a number of photographs, some of which are in colors. The text gives the essential features of the process of making the wheels.

* * *

The General Railway Supply Co. of Chicago has issued a catalogue of railway specialties among which are metallic steel sheathing, "Resisto" insulation, "National" trap doors and "Imperial" window screens. The subject matter is very readable and devoid of extravagant claims.

* * *

Bulletin 2 issued by the Wm. Graver Tank Works of Chicago is devoted to the methods of operation and types of the Bartlett-Graver water softener. Bulletins 3 and 4 are bound under the same cover. They state the reasons why the Bartlett-Graver softener is constructed as it is and the effect of hard water upon boilers, including the losses resulting therefrom.

* * *

A very attractive booklet has been published by the Dake Engine Co. of Grand Haven, Mich., and it is an example of high art in catalogue work. The complete line of Dake engines for hoisting and derrick use is illustrated and described. The Dake engine is a square piston engine, having two movable pistons and is very simple and compact. It is operated either by air or steam.

* * *

Greenlee Bros. & Co., whose general offices are now at Rockford, has issued a very comprehensive catalogue of car shop and woodworking machinery. It is 9 x 12 inches in size and bound between heavy cloth-covered board. It is a valuable and interesting catalogue for the desks of men interested in woodworking operations. The illustrations and descriptions are very complete.

TWENTIETH CENTURY AUTOMATIC LOOSE PULLEY OIL CUP.

The accompanying figures illustrate the manner in which the principle of centrifugal force is used to automatically oil loose pulleys. The cup will run from one to three weeks per filling, according to the number of starts and stops, speed, etc. All oil put in to the cup goes to the bearing and the nuisance of having oil flung and spattered over floor, workman, machines and belt is entirely done away with and a decided saving in oil and time effected.

Figure 1 is a view of the inside showing the feeding tube. When the pulley is brought into operation the centrifugal force throws the oil to the top of the cup and fills the feeding tube. When the pulley starts next time a portion of the oil in the tube is fed to the bearing and the tube again fills itself.

Figure 2 shows the cup detached from the nipple for filling. This can be done easily with the hand, no wrenches being required. The cup can be removed, filled and replaced with the pulley in any position, thus doing away with the necessity of shifting belts and turning shafting to bring the oil hole on top.

The 20th Century automatic loose pulley oil cup is made of thin pressed steel and is so light that counterbalancing is not necessary. It is, however, amply strong as there are no moving or wearing parts. It is manufactured and sold by the American Specialty Company, Chicago.

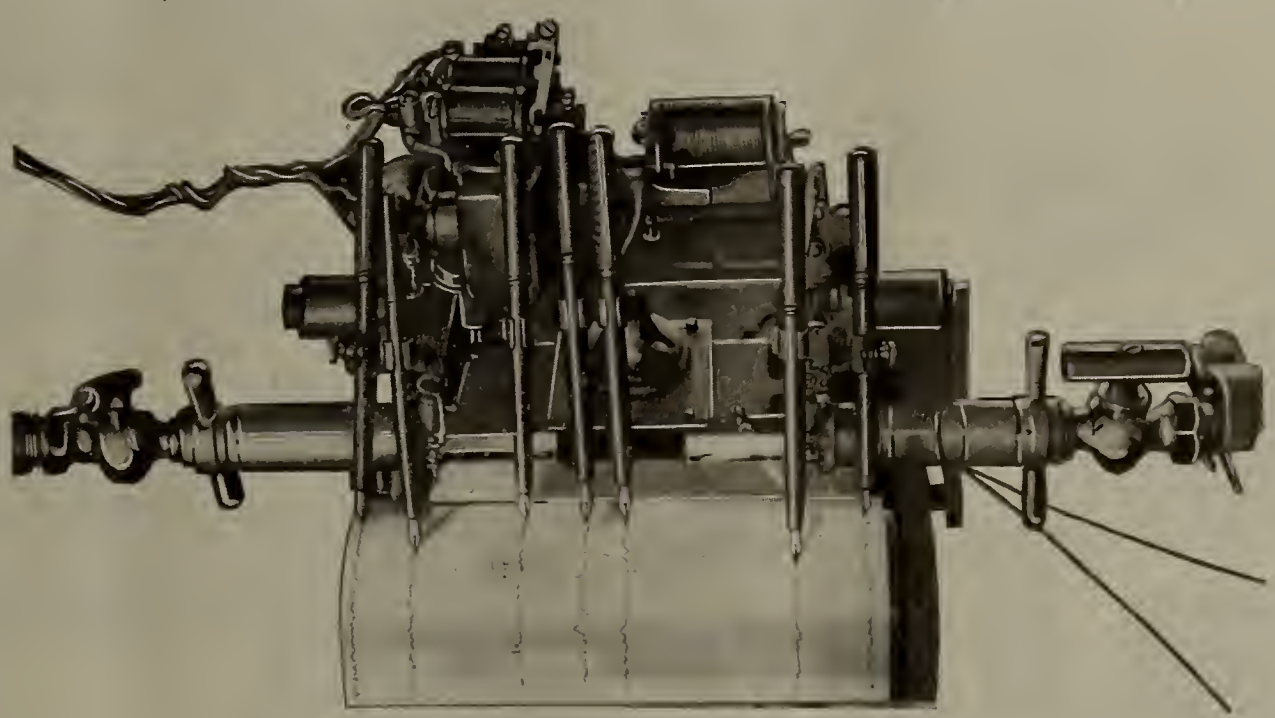

Chronograph Fitted with Fountain Pens.

Fig. 2.—Automatic Oil Cup Detached from Nipple for Filling.

FOUNTAIN PENS IN DYNAMOMETER CAR.

The following description is taken from a letter written by Isaac Simpson, of the Westinghouse Air Brake Co., to

the L. E. Waterman Co., New York, and refers to the use of Waterman's "Ideal" Pens in connection with the recording apparatus in a dynamometer car used for brake tests and in charge of Mr. Simpson:

"The chronograph, or recording apparatus, consists of an electric motor and a series of gearings through which is driven a roll of paper nine inches wide, upon which is automatically recorded the various performances of interest in locomotive and train operation and air brake control, such as the useful power of locomotive delivered at the drawbar of the tender, the speed in miles per hour, the revolution of wheels under dynamometer car, time moments at half-second intervals, position of reverse and throttle levers, train line air pressure, brake applications, and an offset pen for indicating mile posts and passing stations, in order that the performance at any point on the road may be definitely located.

The recording apparatus can be so adjusted as to record any or all of the events enumerated above to meet the requirements of the test desired.

"The records of the various events are registered through means of indicators and magnets and a permanent continuous record inscribed on the roll of paper by means of fountain pens.

"This car has now been under my care for slightly over eight years. At the beginning of that time, of the eight recording fountain pens on the apparatus, but two were of your manufacture.

"The two 'Ideal' pens which were on the car at the time I took charge, are still on and have given constant satisfaction and to all appearances are good for many years' service. In my opinion this performance is remarkable when the conditions of operation are fully considered.

"This car has, during the time these pens have been in service, run on tests from the Atlantic Coast to the Pacific Coast, in both freight and passenger service. You should also understand that the position of the car in all these tests is directly behind the tender of the locomotive, where, in view of the fact that no compensation is made in the construction of the car maximum vibration is experienced. To this, I believe, may be attributed the failure of other makes of pens tried, as this vibration resulted in a constant

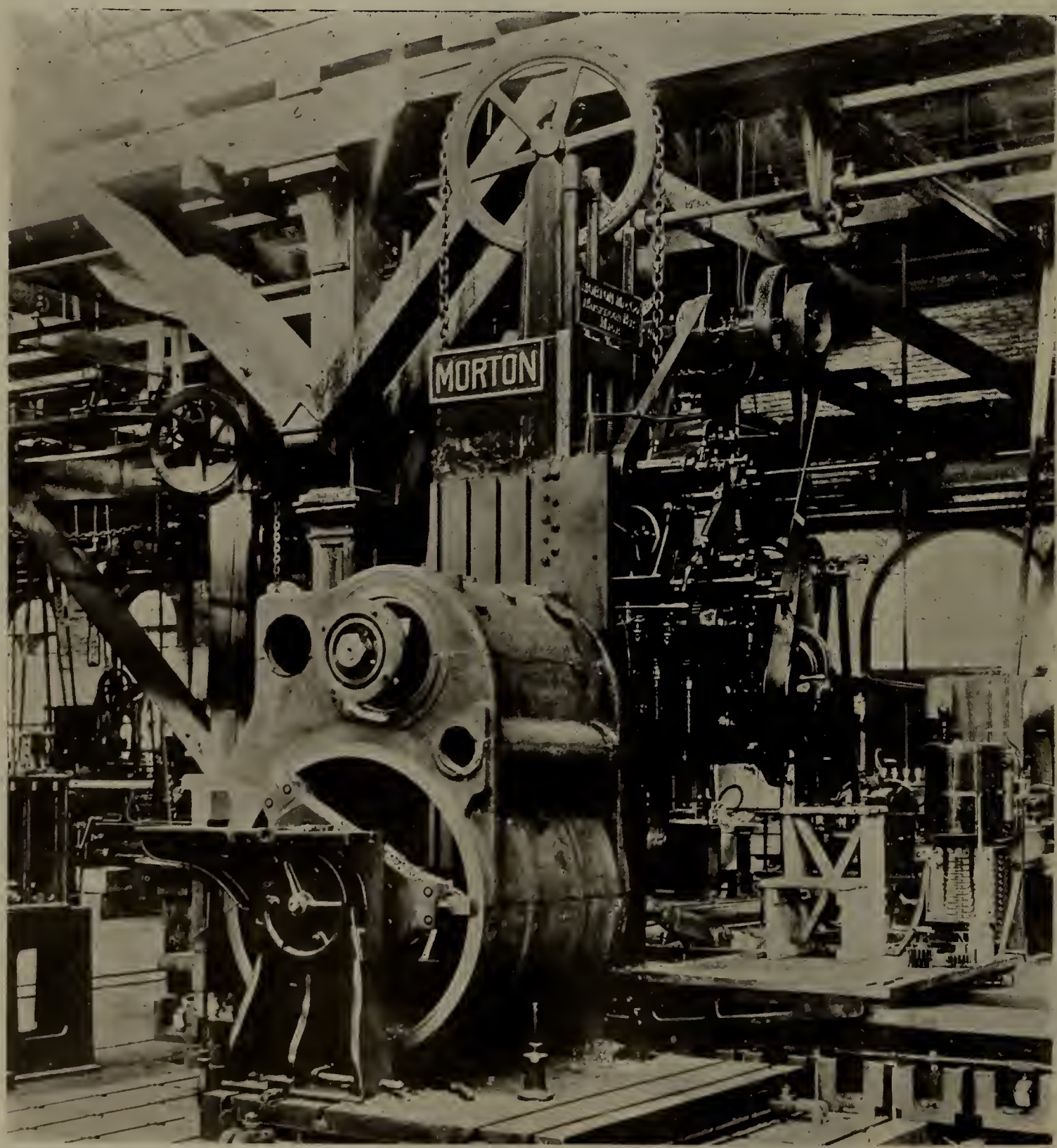

Boring a Piston Valve Chamber with a Morton Draw Cut Shaper.

disarrangement of pen points and feeds. The stable construction of the 'Ideal' pen, however, seems to be ample insurance against such disorders.

"As an instance of the severe service demands upon this recording apparatus, I might cite a test run made upon the Atchison, Topeka & Santa Fe Ry., last August (1910). A continuous test was made of a fourteen-car regularly scheduled passenger train from Chicago to Los Angeles and return, a distance of approximately 4,500 miles, during which only regularly scheduled stops for passengers, water and engine changes were made. The recording apparatus then was in practically constant service for seven days, during which time a continuous record was registered upon nine miles of paper passing through the chronograph. This record was recorded as well without a single failure of pens.

"It should be considered that this car is in similar service for practically every day of the year, and that a single pen failure may render the entire results of a test valueless, amounting at times to the loss of several hundreds of dollars.

"In the travels of this car, it is often accompanied by the various railroad officials of the road traversed. Many expressions of surprise have been made by them of the perfect record secured from these pens, and inquiries have been made as to what make of pen has been employed and whether or not pens have been specially constructed for that purpose. It has been a great pleasure to me to advise them that the pens were Waterman 'Ideal' of ordinary construction."

MORTON DRAW CUT SHAPER.

The accompanying illustration shown the manner of boring a piston valve chamber in a cylinder casting, by means of a draw cut shaper manufactured by the Morton Mfg. Co., Muskegon Heights, Michigan.

This shaper is a familiar machine in all large railway shops but it is probable that its adaptability to a large variety of work is not fully appreciated by all those interested. The machine is equipped with a very large number of attachments for performing special work, such as key seating for drivers and eccentrics, planing shoes, wedges, rod brasses, port milling, rotary boring and milling.

A special draw cut shaper is built by this company for frog and crossing work and this machine has become fully as popular as the standard.

The standard machines are built in two sizes:

48-in. stroke, 60-in. Vertical Feed, 9-ft. Horizontal Feed.

60-in. stroke, 60-in. Vertical Feed, 9-ft. Horizontal Feed.

A special set of chucks for holding cylinders castings, a port milling attachment, a rotary planing, boring and milling attachment, and a T slotted table for small work, are part of the equipment of the machine.

Some of the claims are as follows: It requires one-half the floor space of a housed planer. It will plane a cylinder and mill the ports at one setting in the chucks. It will bore piston valve chambers at same setting as planing. It will plane the smoke box fit after cylinders are bolted together. It can be operated profitably on smaller work, as it does not consume the power and saves the operating power on heavy work. The power varies proportionately to speed and depth of cut, regardless of weight of work.

Steel Horse Ready for Use.

FOLDING STEEL HORSE.

A patented folding steel horse or trestle has recently been placed on the market by Peter A. Frasse & Co., 417 Canal street, New York, which has a number of advantages over the old wooden horse, chief of which are compactness and strength. The legs are firmly locked when the horse is in use, and when not in use they can be unlocked and folded up so that they lie flat, thus making them both easy to handle and to store. They are designed of the proper size and thickness to carry any load they may have to sustain and are painted to preserve

Steel Horse Folded.

the metal. A wooden top can easily be put on if it is desired. Sizes 30 and 31 are especially adapted for railway use, their weight being between 16 and 18 pounds, although the horses may be obtained in a great number of different styles and sizes as well as in special sizes. Horses and trestles are in use in countless places, and to those who use them this new horse should be of interest, being in line with the growing tendency of making use of metal wherever possible.

BRAKE BEAM DEFLECTION AND PISTON TRAVEL.

In connection with the exhibit of the P C Creco beam at the Air Brake convention in Chicago, the Chicago Railway Equipment Co. showed the accompanying interesting diagram. This diagram graphically illustrates the difference in effect upon piston travel of the M. C. B. No. 2 Creco brake beam and the ordinary 5-in. by 9¾-lb. "I" section brake beam. It will be noticed that while the deflection of the "I" beam at 6,000 lbs. load results in a piston travel of over ½ in., the deflection of the No. 2 Creco causes but ¼ in. deflection. At 12,000 lbs. the "I" beam deflection represents piston travel of 1¼ in. on an 8 to 1 brake leverage, while with the Creco the same deflection shows a piston travel of about ½ in. The "I" beam collapses at 15,000 lbs. load and would allow the piston to bottom

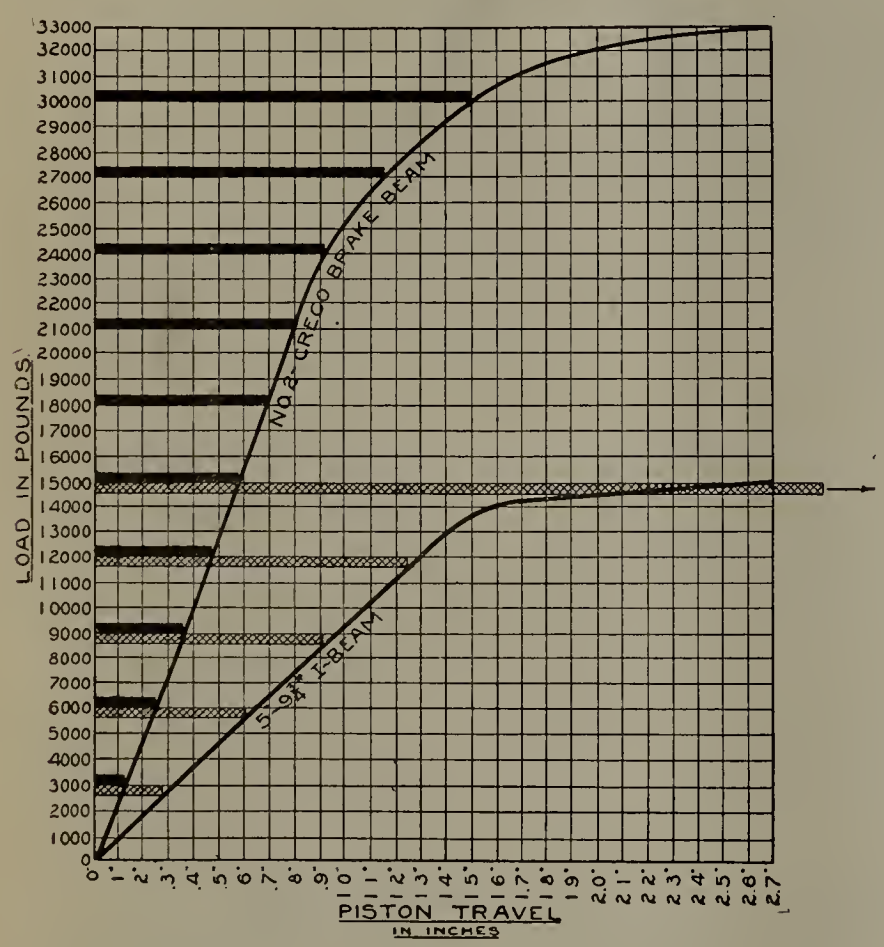

COMPARATIVE VALUES OF NO-2 "CRECO" AND 5"-9¾# I-SECTION BRAKE BEAMS.

itself against the brake cylinder head, while the No. 2 Creco beam would allow piston travel of but little more than ½ in. at the same load. The importance of controlling piston travel and of not allowing it to substantially exceed the normal movement is fully appreciated and the effect of brake beams on this matter is clearly shown by this diagram.

Industrial Notes

The Steel City Electric Co. has appointed the Aylesworth Agencies Co., 143 Second St., San Francisco, Cal., as its Pacific coast sales representatives. The Aylesworth Agencies Co. will carry a large and complete stock, enabling them to make prompt deliveries on all orders received.

The McKeen Motor Car Company, Omaha, Neb., has received an order from the Woodstock & Sycamore Traction Company, Sycamore, Ill., for a third 55-ft. motor car. There are now 114 of these cars in service in the United States.

Charles L. Cordes, for several years chief clerk in the traffic department of the American Steel & Wire Company, Chicago, has been promoted to division freight agent in charge of the Pittsburgh district, succeeding L. H. Korndorff, now in charge of the traffic on the Pacific coast with headquarters at San Francisco, Cal.

The Nova Scotia Car Works, Halifax, N. S., is making additions to the capacity of its plant. The company will begin to build steel cars on October 1.

Mr. F. R. Cooper, formerly superintendent of motive power of the Kansas City Southern, has been appointed western sales agent of the Pittsburg Forge & Iron Co., with headquarters in the McCormick building, Chicago.

Jason Paige, who recently resigned from the Inter Ocean Steel Company, Chicago, has been made contracting engineer for the Pittsburg Steel Products Company, Pittsburg, Pa., with office in Chicago.

The Homestead Valve Manufacturing Co. announces that the McMaster Carr Supply Co., 166-168 W. Lake St., Chicago, has been appointed agent for Illinois and parts of Wisconsin and Iowa, in place of the Jos. H. Whitehead Co. The new agents are in a position to supply customer's wants with greater dispatch than has been possible in the past, as they intend to carry a large stock of Homestead valves, which will enable them to give prompt attention to all orders.

The Strauss Bascule Bridge Co., Chicago, has received an order from the City of New Orleans to put up a 60-ft. clear-span bridge over the Old Basin canal at Hagan avenue, New Orleans, La.

The Hayes Track Appliance Co., of Richmond, Ind., recently received an order for 100 Model AP Derails from the Havana Central Railroad Co. for shipment to the United Railways of Havana at Havana, Cuba.

The Howard Axle Co. has received an order from Japan for 3,100 tons of car axles.

J. A. & W. Baird & Co., Boston, Mass., have transferred their interests in the manufacture and sale of Rex Flintkote roofing and other waterproofing and insulating specialties, to the Flintkote Manufacturing Company, Boston, Mass.

The Ironton Punch & Shear Co., Ironton, O., who took over the business of the Cincinnati Punch & Shear Co., has been granted a permit to erect a modern steel factory building, running from Hecla to Aetna Sts., contract for which has been awarded to the Riverside Bridge Co.

The Seattle Car Mfg. Co. has completed plans for a steel building for a forge and machine shop at Renton, Wash.

The Standard Tool Company, Cleveland, Ohio, has opened a western branch at 552 West Washington boulevard, Chicago, where a complete stock of all styles of twist drills, reamers, milling cutters, taps, drill chucks, taper pins, etc., made by the company will be carried for immediate delivery.

Geo. E. Mollison, 50 Church St., New York, has acquired an interest in the Cowles-MacDowell Engineering Co., of Chicago, and will act as eastern representative of the latter company.

Lewis B. Rhodes, formerly superintendent of motive power of the Virginian Railway, has been made southern manager of the Ward Equipment Co., New York.

Position Wanted.

A traveling salesman with long experience, large acquaintance and valuable clientele in almost every section of the country, desires connection with first class railway supply house by Sept. 1. First class references. Address W. P., care Ry. List Co., 431 S. Dearborn St., Chicago, Ill.

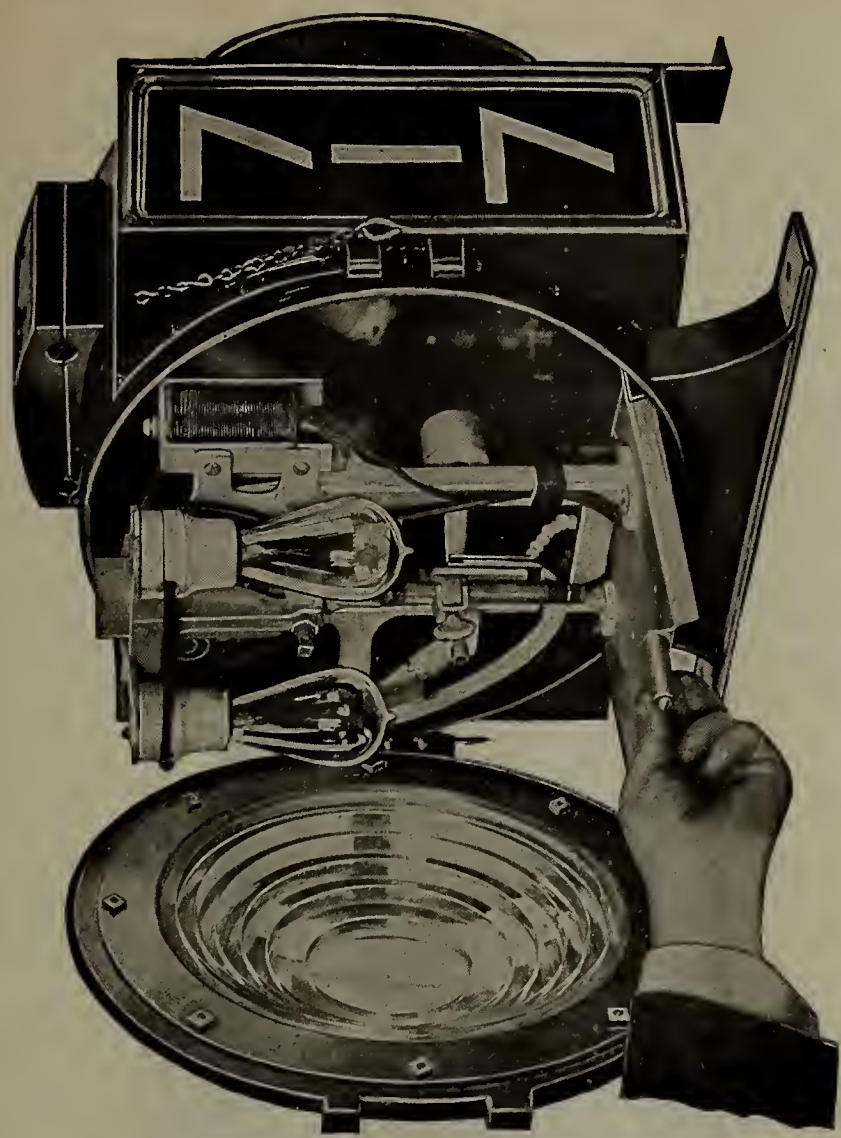

Moon Headlight Open for Inspection.

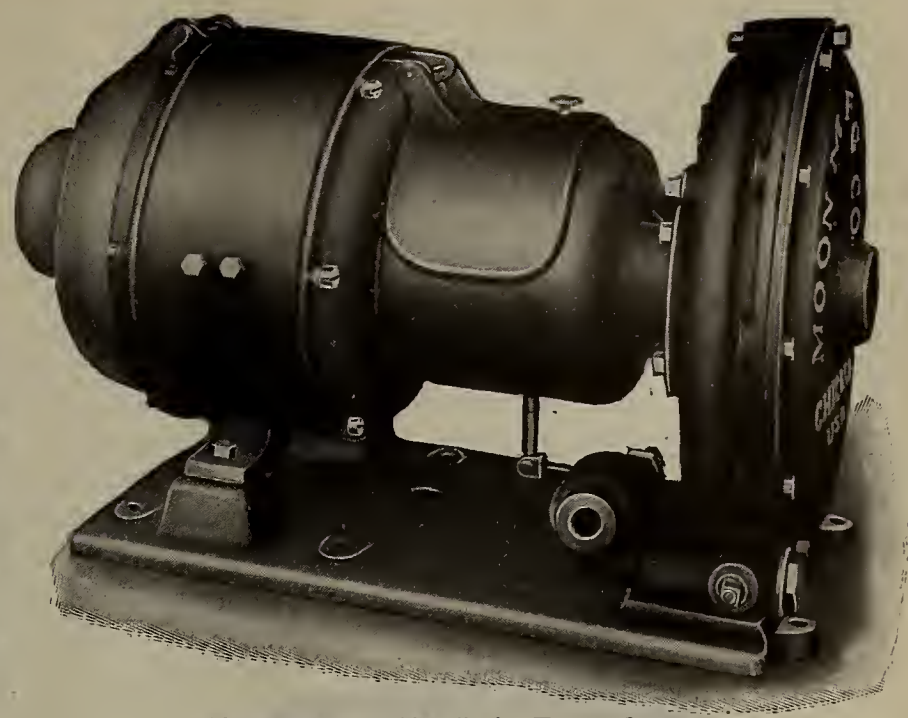

Moon Electric Headlight Turbo-Generator.

MOON HEADLIGHT OUTFIT.

The accompanying illustrations show the turbine generator locomotive headlight set manufactured by the Moon Mfg. Co., 108 North Jefferson St., Chicago. A glance at the photographic reproductions shows not only the extreme simplicity of the design but its neatness and compartness as well.

The machine is dust and water proof, and arranged to open easily for the oiling and care, as well as for dismantling if necessary, as all parts are easily accessible. The turbine is full ball bearing, and has two 3/16-in. round nozzles, and operates on very low pressure. The headlights as well as the cab lights are operated on 38 lbs. of steam pressure. An automatic throttling governor of centrifugal design is mounted on the shaft, between the governor and the turbine, is very sensitive, and acts with exactness.

This machine is so constructed that it requires no reducing valve in the steam pipe between the turbine and the boiler. The machine runs at 2,150 r. p. m., generating the standard 110 volts, which enables the engine to use for its cab lights the standard lamps. The equipment is so arranged that the arc can be turned out, and a mild incandescent light turned on, or the arc can be out entirely without interferring any with the cab lights. The machine is perfectly automatic in its control.

Tests have shown the efficiency to be very good. The headlight, it is stated, will burn a month under ordinary conditions on three carbons and the machine will run three months on a pint of oil.

The outfit appears to be as near fool-proof as a machine of this nature could well be; this means that it will stand rough usage, with a small amount of attention.

Moon Turbo-Generator Set Partially Dismounted.

INTERESTING HIGH DUTY DRILLING RECORD.

At the Atlantic City Conventions in June, the Foote-Burt Co., of Cleveland, had on exhibition the drill shown in the accompanying illustration. The machine was used in making public tests of the high speed twist drills of the Cleveland Twist Drill Co. It is made in seven sizes and is a standard product.

The table gives the results of these tests and it is said that the drilling speed of 57½ inches per minute is a world's record. This is worthy of unusual attention in that the performance is that of a stock machine of standard size—25½-in. by 36-in. swing.

DRILLING RECORDS MADE WITH FOOTE-BURT HIGH-DUTY DRILL.

Drill.	Mat.	R. P. M.	Feed per Rev.	Inches drilled per min.	Periph. speed in Ft. per min.	Cu. in. metal removed
1¼" Flat Twist	C. I. 4 1/32"	575	.100	57.5	188	70.6
1½" Flat Twist	C. I. 4 1/32"	355	.100	35.5	139.4	62.7
1¾" Flat Twist	C. I. 4 1/32"	350	.100	35.	160.	84.18
2 1/16" Flat Twist	C. I. 4 1/32"	190	.050	9.5	115.	39.9
3 " Flat Twist	C. I. 4 1/32"	120	.100	12	94.	84.8
1¼" Flat Twist	M. S. 4¼"	350	.030	10.5	113.7	12.8
1⅝" Flat Twist	M. S. 4¼"	225	.040	9.	94.8	18.6
2½" Milled	M. S. 4¼"	175	.040	7.	114.7	34.3
3 " Flat Twist	M. S. 4¼"	150	.030	4.5	116.	31.7
3¼" Flat Twist	M. S. 4¼"	150	.030	4.5	127.	37.33

This machine has a capacity for high speed drills up to 3½ inches in solid steel to their full cutting edge capacity. It is of the most rigid construction possible with the highest grade material, for the different requirements used. All bearings are bronze bushed except the main driving shafts at base and top of machine, which are Hyatt high duty roller bearings. All feed changes are through a quick change gear device, operated by levers located at front of machine within easy reach of operator at all times. Spur gears (which are always in mesh) are used throughout, except one pair of mitre gears at the driving end and one worm and worm gear for the feed.

The first tests made were for the purpose of demonstrating what is good shop practice, i. e., the drills were put through at speeds and feeds that would be economical under average shop conditions. Then, to demonstrate the reserve efficiency and durability of the drills, "stunts" which demanded extremely high rates of speed and feed were attempted.

The highest rate of speed in drilling known to machine shop practice was attained by a stock 1¼-in. Paragon Flatwist high speed drill in successfully removing 70.55 cu. in. of cast iron in one minute, repeatedly cutting through a heavy billet at the record-breaking rate of 57½ ins. per minute—nearly an inch per second. This drill ran at 575 rev. per min. with 1/10 (.100) in. feed per revolution, successfully withstanding the strain of this extreme speed and feed. Before attaining this maximum performance which was approached gradually, numerous other "Cleveland" drills were put through at the rates of 25, 32½, 33½, 35 and 47½ ins. per minute, as can be seen from the complete record of the tests. In no case was the limit of strength of the drills reached, but the speed of 57½ ins. per minute could not be exceeded on account of the inadequate capacity of the electric feed wires which brought current to the motor driving the drill press.

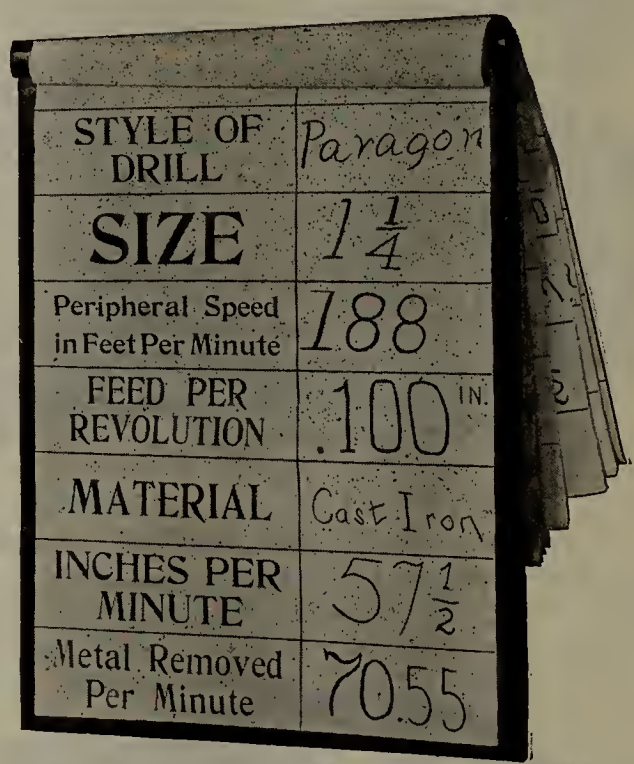

STYLE OF DRILL	Paragon
SIZE	1 1/4
Peripheral Speed in Feet Per Minute	188
FEED PER REVOLUTION	.100 IN.
MATERIAL	Cast Iron
INCHES PER MINUTE	57 1/2
Metal Removed Per Minute	70.55

Bulletin Giving Detailed Announcement of Record Test in Cast Iron, Cleveland Twist Drill Co.

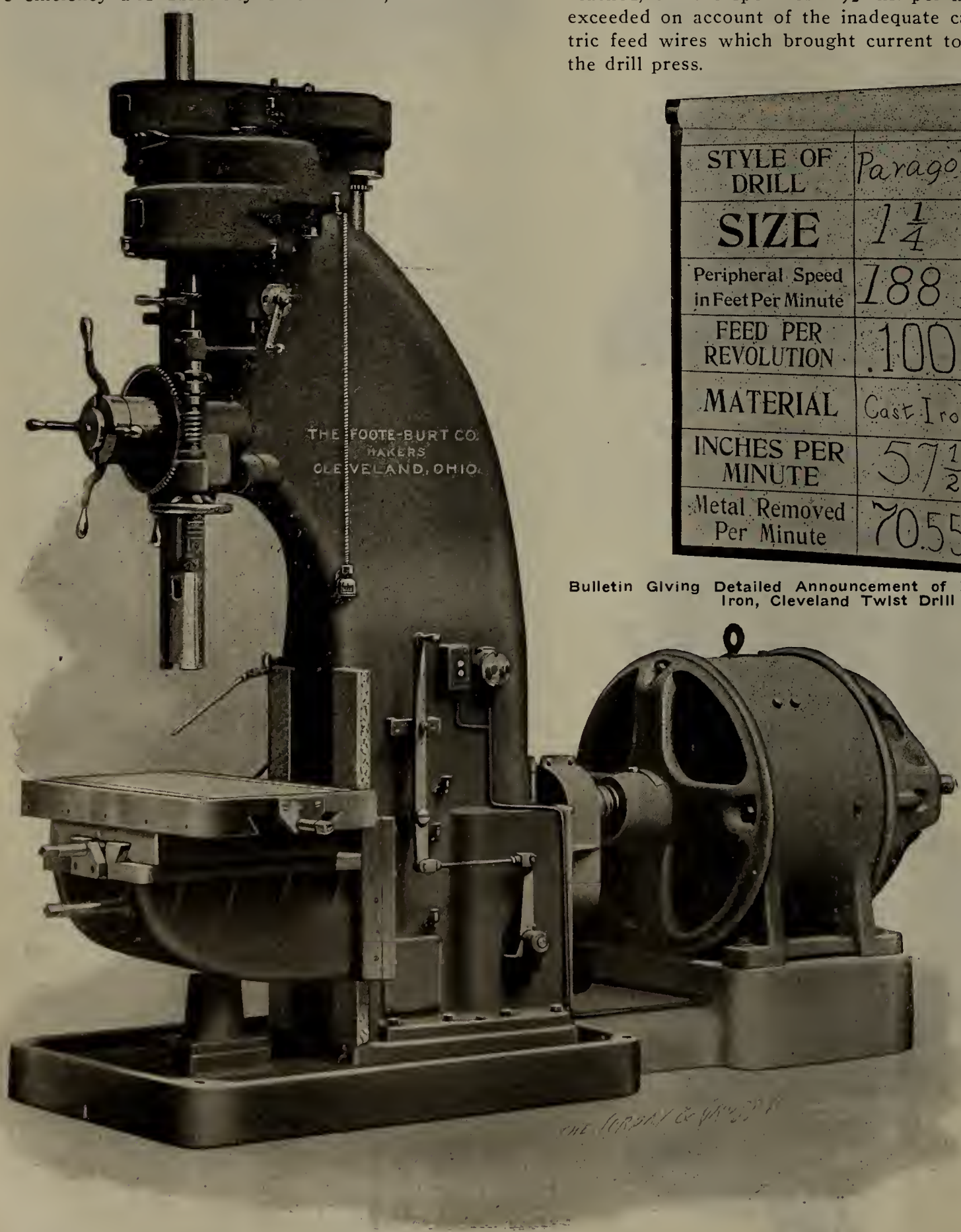

Foote-Burt High Duty Drill.

Drilling at such high speeds and heavy feeds is not to be recommended as economical shop practice, and this performance will in all probability not be repeated in many shops. These results were only made possible by carefully established ideal conditions, such as: absolute rigidity in the machine, uniform and sufficient driving power, solid clamping of the work, perfect grinding of the tool and most expert handling. They are of value chiefly as demonstrating the power and rigidity of the machine and the exceptional reserve strength of the drills.

Another noteworthy test was made with a 2½-in. milled drill from stock. It drilled 68 holes through a billet of machinery steel 4¼ ins. thick, without being reground. This drill was operated at 150 rev. per min. with a feed of .015 per revolution removing a total of 1,418 cu. in. of material. Although the drill was still in good condition the test was cut short at this point by the convention coming to a close. This test demonstrated what can be done all day long in any shop properly equipped and is indicative of what results should be expected in economical high speed drilling.

ELECTRICALLY OPERATED PORTABLE DRILLS AND REAMERS.

An exhibit at the recent M. M. & M. C. B. Convention, held at Atlantic City, June 14th to 21st, which attracted much attention and was the result of much favorable comment, was the display of the Van Dorn & Dutton Company, Cleveland, Ohio.

For the first time this company exhibited as an entirety its new or improved line of "Hard Service" portable electrically operated drills and reamers. This line as presented consisted of eight different types of machines as follows: six sizes, scope 0 to 2 inches, for operation on direct current, either 110 or 220 volts, and two sizes 0 to ⅜ inches, for operation on either direct or alternating current, 110 or 220 volts. These machines were in operation drilling and reaming in iron and steel and also wood boring.

The manufacturer, who has been engaged in the production of tools of this kind for a number of years, does not claim anything radically new in principal, but a marked improvement in both electrical and mechanical construction.

In the larger machines four pole construction is employed, whereas the small tools are of the two-pole construction. The design is such that the harder the tool is forced, the greater the torque or working power.

Straight series motors, developing the greatest factor of power obtainable for size and weight, are used. The armature is of the slotted drum type, built up of soft, steel laminations, on a hollow shaft, these laminations being made from steel of a special analysis to give the highest efficiency. Each lamination is carefully and uniformly insulated.

In the larger machines the field frames are constructed of steel of a special analysis, by means of which the best results are obtained. In the smaller machines, the field frames are built up of laminations much in a manner similar to the armature.

In the design of these machines exhaustive consideration has been given to the matter of lubrication and bearings, experience having proven that these two features are of the greatest importance in the construction of tools of this character. The method of lubrication is simple but effective. The gears are enclosed in a gear case, entirely separate from the windings, this gear case serving as a lubricant chamber, as well as a housing for the gears. By means of canals lubricant reaches all bearings with the exception of that supporting the spindle, which is lubricated by a receptacle easily accessible. In revolving the gears force the lubricant through these canals, insuring a proper and sufficient lubrication at all times. The oiling system is so devised that one charge of non-fluid oil in the gear case will answer for several weeks. Ordinary machine oil can be used for lubricating the spindle.

The wipe system employed at the spindle is so arranged that the wick is constantly in contact with the spindle, extending into the oil chamber. The bearings are proportioned with an excess factor of safety. The system used was adopted after exhaustive consideration of the subject on the part of experts in this branch of engineering and has withstood the severest tests.

In laying out these bearings consideration has been given to each and every function involved, friction being reduced to a minimum and great wearing qualities secured. At the high speed members, imported ball bearings are used, whereas elephant bronze bushings are used as bearings for the slower speed members.

Another feature of interest is the unique cooling system, the design and construction employed being substantial and effective.

The switches employed are of the quick-break type, ca-

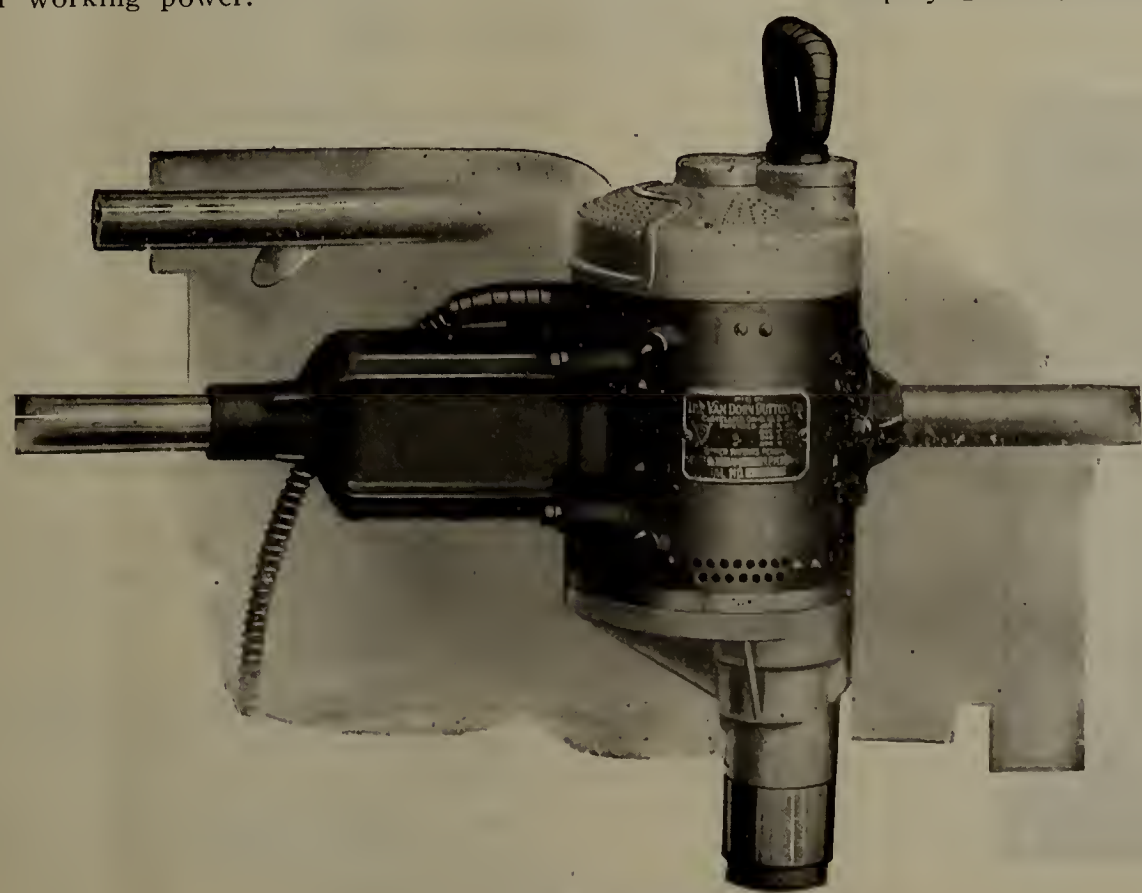

Van Dorn-Dutton Direct Current Portable Drill.

pacity 50 per cent in excess of the duty required. In the larger machines for reaming mechanically operated automatic switches are used. These will automatically stop the machine, should the operator accidentally release the handles when the tool is in operation. These switches will at all times break the current instantaneously, thus eliminating heavy and destructive arcing. In the smaller machines switches of a special design are also employed, the design used being strong mechanically. The switch contacts are so designed that when wear is shown, they are easily replaced at a very small cost.

MASON SAFETY TREADS.

The use of Mason safety treads in railroad stations on stairways, inclined ways and elevator thresholds has been quite general for some years. Architects and engineers have extensively specified it for installation on wood, concrete, stone, iron and marble. Aside from the permanent structures of railroad property, such as stations and depots, there are a large number of places where safety tread is used to advantage, such as in the power houses around the machinery where there is oil, at the dynamos, on the narrow ribs of hard metal it creeps over into the open groove on either side, leaving a ragged edge and this catches the filth

Applications of Mason Safety Treads.

Mason Treads on Street Car Step.

Cross Section of Mason Tread.

and dirt and retains it, making the treads unsanitary; the a grooved surface, the alternate grooves being filled with coming out. Where the lead is not supported by the parallel the grooves are undercut so as to prevent the lead from containing some sharp abrasive material like carborundum; a non-slippery soft metal-like lead, or with a composition steps and on the floors of the signal towers, but particularly on the steps and vestibules of the passenger, baggage and postal coaches.

The safety treads are made of a rolled steel base having sheet metal base of this kind of tread rapidly rusts and disintegrates.

The Mason safety tread has withstood the test of time and is long lived, cheap to maintain and always reliable. It can be installed by the ordinary mechanic on wood, iron, concrete, or stone.

ALLEN CAR VENTILATOR.

The Atlantic Coast Line has specified on the 1,400 new ventilated box cars being built by the American Car & Foundry Company a new type of end ventilator which seems to have overcome all the objections to the type of ventilators now generally in use on box cars. This ventilator was

designed and patent applied for by Mr. G. L. Allen, chief draftsman for the Atlantic Coast Line, Wilmington, N. C.

The ventilator now generally in use comprises a grating in the end of the car, with a wooden frame, vertical wrought iron rods and wire netting. The ventilator is closed by means of a wooden door sliding on a wrought iron track and secured in closed position by metal guides at the bottom of the door and a set of ordinary door fasteners.

The objections to the present style of ventilator, described above, which it is believed the new ventilator will overcome, are as follows:

The high cost of maintenance, due to being constructed principally of wood and secured by a number of bolts, forgings and castings.

The fact that shifting loads, such as dressed lumber, easily break out the grating with its wooden frame.

When the ventilator is open the contents of the car are not protected from rain.

In order to guard against accidental opening of the doors (due to defective fasteners) and the contents of the car being exposed to damage by rain or sparks, the wooden doors are often nailed in closed position and the ventilator rendered useless.

The interference of the door with the location of the brake step and the end ladder clearance required by the recent safety appliance law. When lower ventilators are used they also interfere with the location of handholds required by law.

The Allen ventilator as shown in the accompanying cut, is very simple in construction and is composed throughout of malleable iron. Its general appearance is extremely neat, it being continued practically within the thickness of the end wall of the car and occupying a space only about 2 ft. wide in the middle of the end of the car. The essential features of the ventilator are: a main frame having flanges inside of the car on all four sides; Z-shaped horizontal bars cast integral with the frame, which lap over the tops of the movable plates, strengthen the frame transversely and back up the wire netting; movable plates; pivotally connected at the middle by an operating rod. The movable plates are not hinged or pivoted to the frame but merely rest, at their ends, in recesses in the sides of the frame. The ventilator is held in open or closed position by gravity and needs only to be pulled open or pushed closed, in each case exerting a slight lifting force on the handle. The holes which are shown in the ends of the operating rod, with corresponding holes in the lugs at the top and bottom of the frame, are provided simply for "sealing."

It is stated that this ventilator does not interfere at all with any form of end bracing, whether horizontal or vertical, and being constructed of metal throughout is well adapted to use on cars of all steel or composite design.

The movable plates, when in open position stand at an angle of 45 degrees, their lower edges in line with the upper edges of the Z-shaped bars below them, thus making it necessary for rain, in order to enter the ventilator, to be driven upward. The ventilator is therefore rain proof whether open or closed. The slanting plates also tend to deflect sparks.

The ease with which the ventilator can be operated makes it possible for trainmen to manipulate them while the train is in motion. This is an advantage in case of through trains where the trainmen may pass from one car to another and from the running board or roof of an adjoining car, open or close the ventilator by means of a rod with a hook on the end of it.

The netting is applied on the inside, as usual, being crimped over the ventilator flanges on all four edges and held securely in place by nails or bolts through the flanges and the netting.

Sectional View Showing Ventilator Closed.

Sectional View Showing Ventilator Open.

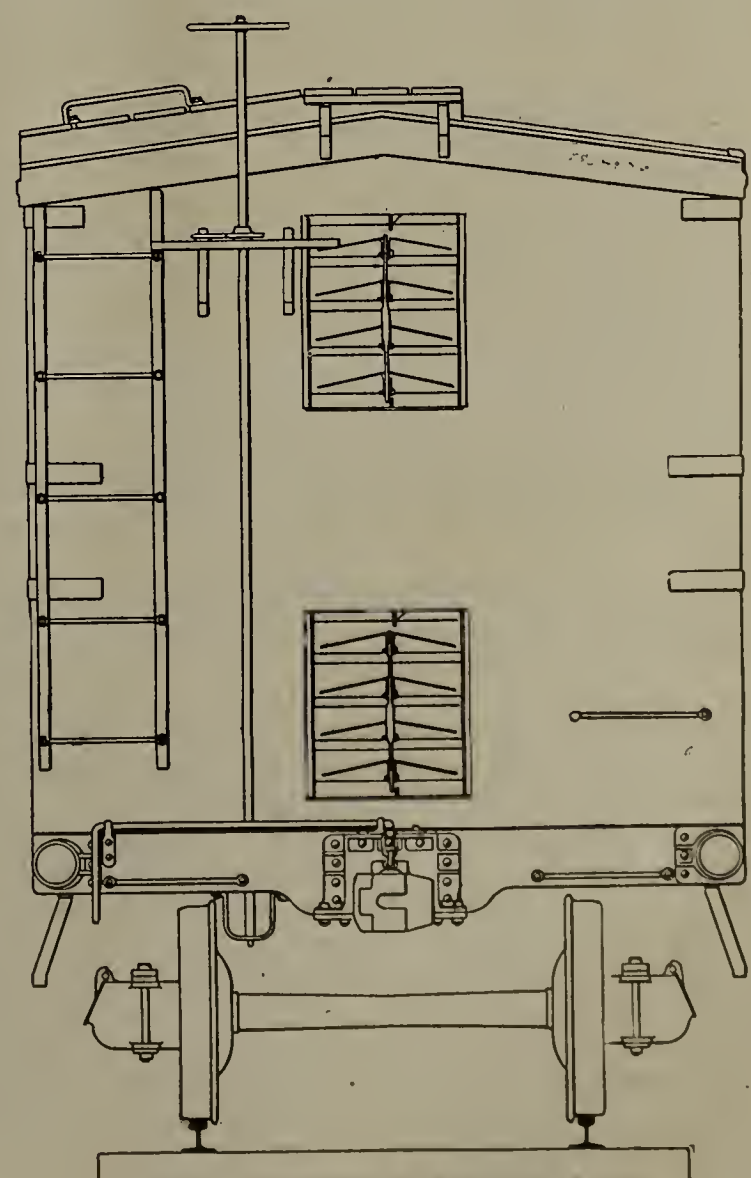

End View of Car Designed to Comply with Recent Safety Appliance Law.

Allen Car Ventilator.

QUALITY PIECE WORK.*

By Benjamin A. Franklin.

In these days of increasing agitation for economical methods of manufacture, perhaps the element that receives the most universal attention is that of labor. This is not to say that there are not other elements of very large importance from the standpoint of possibilities of economy in every business, and indeed, in some plants, of greater economical significance than labor. But in the first place many of these other elements have received, and are receiving, in a progressive systematic manner, such attention as to bring not only constant improvement, but (which is really very much more to be desired in the plan of things) to open up still larger fields of returns for human effort. And in the second place the quick returns on intelligent action, the human interest involved, the increasing profit that lies in volume of production, the unlimited possibilities of increase of product per hour that every man seems capable of developing, and, perhaps not a little, the fact that in any plant more energies and brains become immediately interested and active when the element of labor is dealt with, make it of supreme interest.

And so we are developing the possibilities of this element through motion studies and scientific analysis, and coaxing it on through its human side by the incentives of piece-work, premium plans, bonus methods, efficiency standards, etc., with economical results as to cost, and with a hope that in the long run, all this will lead to decreasing selling prices. But there are those who think that this latter could be radically effected much more quickly by a decree in the tariff, the discovery of a plan of distribution more direct, or a law-compelled or heaven-sent abnegation on the part of capital of all unreasonable profits.

However, to return to labor, it must be acknowledged that very good economical results are being obtained by the various studies and methods employed, and that a new era of labor values is being developed. It cannot be denied that too often the incentive back of the introduction of these modern methods in labor handling is solely the narrow one of plant profit, and not the broader one of mutual benefit to labor and capital alike. Yet it is a fact of observation that when these methods of incentive have been introduced with a sense of fairness and appreciation of the full and continuous rights of labor, the net results to capital have been even greater than when the work was done in a narrow way, since such operation has aroused the most liberal spirit of friendly co-operation, which is most absolutely and essentially the true basis of all of these methods. And it is not to be doubted that through such a spirit of co-operation lies a development of this great problem that will lead to utopian results.

But in all this effort to increase the product per man-hour, quality must not be forgotten. In the matter of moving materials, of much rough work, and even of a good deal of work with precision and automatic tools, haste does not make waste nor affect the desired quality. But there are many operations and articles where judgment and care play a material part in the items of quality and waste, and the unquestionable tendency of haste is to deteriorate.

This latter is the statement that is met when methods of labor payment according to product are suggested to the shop operator who is proud of the high grade of his product, and who guards, as the secret of his profits, against any tendency towards deterioration. And certainly no advance is made, either from a profit point of view when one element of cost is decreased at the later expense of the selling price, or from a broader materialistic point of view when a poorer article is made from good material which care would make into a better article.

One hears much complaint, whether with a true basis or not, that workmen are not so skilled, so careful, as they used to be; that articles are not put together so solidly and well as formerly. If this is true, as indeed it may be in cases, it is only fair to labor to say that it is probably more the fault of the design, the plan, the attempt to imitate cheaply some popular or high-priced article, or perhaps even more than these the different divisions and training of labor, brought about by modern methods, than the fault of labor itself. Nevertheless, some years of experience in many varied industries have left the conviction in my mind that quality is a matter of insistence, rather than of methods of either day or piece work. That is to say, that in that plant where a given standard of quality is insisted upon, the workmen will work to it whether they be paid on a day-work or piece-work basis.

To obviate any danger of retrogression in quality and loss through waste by possible carelessness on the part of workmen hastening toward daily increase of production on account of the rewards offered by the piece-work or other plan, the writer, working as a business economist, devised and put successfully into operation in several plants a plan of piece-work, in which the rate varies with the quality and per cent of waste, so that the daily pay of the operator depends not merely upon the quantity done per day, but very largely on the quality of the work. There is nothing new under the sun, it is said, and it would not be wonderful if one or more of the minds that have for years been working on these problems should have evolved some similar methods. Nevertheless, neither at the time of introduction of these methods, five or six years ago, nor since, has any similar method come to my attention.

There are many articles the manufacture of which, both as to quality and the waste of raw materials, can be gauged very accurately; in which no great scope of judgment is allowed; in which accurate measurement and prearranged jigs and tools play a guiding and correcting part. There is little chance for judgment or waste, except through punishable carelessness, in the work of machining to blue-print size a casting, perhaps with jigs and fixtures. Here, and in many like cases, piece-work finds a safe economy.

It is, then, such a problem as this that demands for best results something better than the mere quantity rate, if the best values are to be otbained, since there are many operations where a gang of half a dozen operators can spoil or waste many times their wages in a day by undue haste or carelessness. For this purpose quality piece-work was devised. Let us illustrate this quality piece-work rate by showing a definite operation, since nothing enlightens so much as a particular example.

This operation was one where certain leather strips were delivered to a gang of about eight or ten men working individually under an inspector. Their work was to cut, from the end of the strips, a certain portion which in their judgment was too soft or too thin (as compared with the rest of the strip) to perform the work that ought to be expected from the good part. When each operator had cut his lot of strips as his judgment dictated, he passed them to the inspector, who passed back to the workmen those whereon there still remained any leather, poor in the inspector's judgment. Very naturally, even on the day-work plan, a doubt in the mind of the workmen led to close clipping of the leather and the profits of the concern.

There are many thousand pieces of leather going through this operation per day, and many thousand pounds of leather per week. When piece-work was suggested for this operation there was not unnaturally a long horizontal shake of the head. And yet there were very apparently two decided economies to be made—a saving in labor per thousand pieces cut, and possibly a still larger saving in waste, since

*From an article in the Engineering Magazine.

the leather at this point was worth $0.50 a pound. The problem was therefore to offer to the men an incentive to accomplish both of these tasks.

The method put into operation really proved very simple, and unexpectedly profitable, since in waste alone it saved four or five times the total wages per year of the whole gang. The figures presented are not the true ones, but the rates set were planned thus:

Basing the percentage of waste at 4½ per cent, the average for the past year, 28 cents per 100 pieces finished are paid provided the individual maintains 4½ per cent waste. For every ½ per cent the waste is decreased, 2 cents extra per 100 are paid, and for every ½ per cent the waste is increased, 2 cents less per 100 is paid. The schedule is arranged as follows:

Rate per 100 pieces.		Per cent waste.
40 cts.	if	1½ average per week
38 "	"	2 " " "
36 "	"	2½ " " "
34 "	"	3 " " "
32 "	"	3½ " " "
30 "	"	4 " " "
28 "	"	4½ " " "
26 "	"	5 " " "
24 "	"	5½ " " "
22 "	"	6 " " "
20 "	"	6½ " " "
etc.		

With these rates in effect, the tendency about-faced. It was now a danger that bad leather would be left on. To obviate this, the inspector was given 50 per cent increase in wages, with the clear understanding that if the former standard of quality of leather passed was lowered at all, he would lose his job. The results from the beginning were remarkable. There was a decided increase in production, and the saving here was ample; but the great saving was in the waste, which in a month or so, with no derogation of quality in the finished article, dropped to 2 per cent, showing plainly that the previous method had been vicious in its tendency to make the work easy at the expense of the company. With leather at 50 cents a pound it is plain to be seen that 2½ per cent saving of any reasonable quantity per week very shortly amounts into a large money value.

But this method brought about another somewhat unexpected though reasonable, result. We have often heard of the blacksmith who ought to have been a preacher, or perhaps it is the other way round. And surely any man who knows labor, knows that from the very nature of things many men are in the wrong berths. The method discussed became selective. It soon showed by the records, those who were not adapted by skill and judgment to do this work, since the daily percentages of waste and quantities made this clear, and brought about, therefore, from a basis of fact, a gang reasonably adapted to do the work.

It is reasonably sure that no method of day, piece, premium, or bonus plan could have brought about the results obtained, since in none of them lurks the incentive to better work; but rather does any plan that tends toward more rapid work also tend in the ordinary workman toward less efficient work. Where the material is of such value as leather, it is safe to say that the danger of loss through this probable inefficiency of haste was so much greater than the gain in labor cost per unit that day work would never have been departed from.

In addition to the satisfaction of the company the men earn 25 to 50 per cent higher wages than under the old plan.

This method, changed to suit the peculiarities of the situation, has also been put in operation in many other operations in the same plant, with equally good results. But one may say that here was a case where, when all is told, it is not certain that the final result of quality is free from doubt, since parts of leather hitherto thought improper for the purpose, after this introduction, may have been thought proper. Very true. But even then, the advantage is still a real one, since after five or six years these products of the company stand equally well today all the tests that they formerly stood, and are among the leaders of the class of products in as high position as formerly.

In another operation in this same factory, where the proposition was to cut from portions of the hide various small parts varying in size and sale value, the same method wrought about a reduction in waste and increase in sale value of parts per dollar's cost value of hide.

Thus was started, as far as I know, "Quality Piecework."

The three elements in the operation of quality piecework are:

1.—To find operations where waste is to be saved or quality bettered by care.

2.—To find by observation and data what can be done per hour on the quantity basis.

3.—To find what the average waste or standard quality is as a base for quality rate.

There have already been some important developments of this quality piecework in different factories. It can be applied with careful study to any operation where waste is to be saved or quality bettered.

Important from the point of economy as a reduction of labor unit cost may be, the struggle for speed cannot last without a full accounting with quality, and the betterment of quality and saving of waste will take its place in the progress of the world, as a good second with the betterment of morals and social practice, and indeed has an effective place in their progress. Perhaps the next step in the progress of increasing per-hour production in manufacture by means of extra wage incentive will be the betterment of quality through quality piecework.

MISSOURI PACIFIC BUYS CARS.

Contracts were let August 7 by the Missouri Pacific-Iron Mountain railways for fifty pasenger service coaches. The order includes eleven chair cars, eight regular passenger coaches and two divided passenger coaches which are to be built by the Pullman Company and fifteen baggage cars and fourteen mail cars, the contract for which was awarded to the American Car & Foundry Company which will construct them at the St. Charles, Mo., shops.

Under the contract all of the fifty cars are to be built on the steel construction plan and are to be equipped with the most modern safety devices. The passenger cars are to have in addition every improvement in the line of comfort and are to be electric lighted and finished in mahogany with latest designs of comfortable seats, which are to be plush upholstered. The most modern heating is also called for in the specifications.

The cars for which these contracts were let are in addition to the large installment of dining cars, passenger coaches, mail and baggage cars which the Missouri Pacific-Iron Mountain have been receiving lately from the American Car & Foundry Company shops at St. Charles. The latter cars, now arriving, are also constructed on the most modern plans.

Since President B. F. Bush took hold of the Missouri Pacific-Iron Mountain lines he has also let a contract with the American Locomotive Works for fifty freight engines of the Mikado type. Under the agreement made these engines are to be delivered the latter part of the present month.

Bids have also been asked from leading manufacturers for a large number of passenger locomotives and a big equipment of freight cars. It is expected that these orders will be placed within the next week or two.

Recent Railway Mechanical Patents

TANK CAR UNDERFRAME.

993,552—John M. Rohlfing, St. Louis, assignor to American Car and Foundry Company, St. Louis.

Patented May 30, 1911.

In this construction, between the cast end frame there extends a rigid tubular beam (9) for taking care of the buffing strains, while tension rods (16) carry the direct strains.

TRUCK SIDE FRAME.

993,577—Edson C. Covert, of New Kensington, Pa.

Patented May 30, 1911.

This invention relates to an improved truck side frame which is made from wrought as distinguished from cast metal. The patent relates to details of construction as to the method of securing the journal boxes and bolster guides to the frame. The illustration shows a side frame formed from an expanded I-beam and illustrates a perspective view of the truck.

993,552.

993,577.

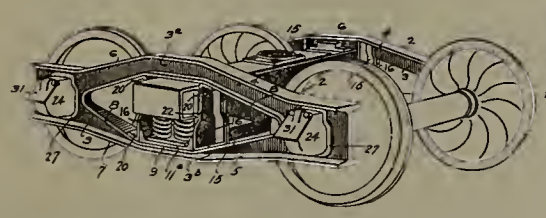

993,589.

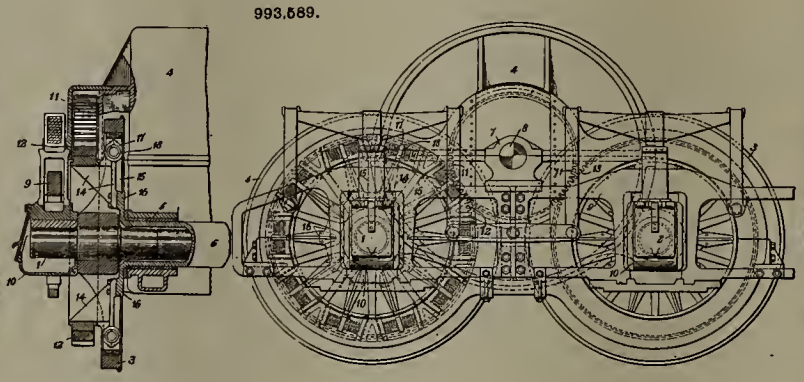

994,252.

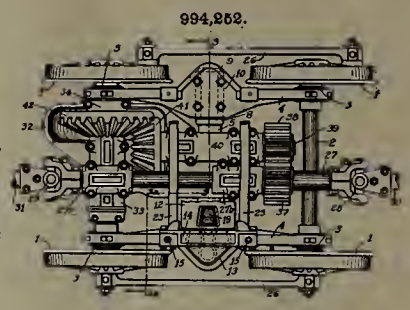

ELECTRIC-RAILWAY VEHICLE.

993,589—George M. Eaton, of Wilkinsburg, Pa., assignor to Westinghouse Electric & Manufacturing Co., East Pittsburg, Pa.

Patented May 30, 1911.

This is a new Westinghouse design of truck and is gotten up for the purpose of enabling abnormally large motors to be used. To this end, the driving gearing is arranged outside of the traction wheels in order that all of the space between the wheels may be available for the motor. As shown in the illustrations, the motor shaft carries a pinion which engages two gear wheels each connected to a corresponding traction wheel by means of yokes and springs.

RAILWAY-TRUCK.

994,252—William M. Fawcett and eorge L. Swabb, EriGe, Pa., assignors to the Heisler Locomotive Works, Erie, Pa.

Patented June 6, 1911.

This invention relates to trucks for small geared locomotives such as are used by contractors. It is frequently desirable to drive a number of such trucks from a single source of power and for this purpose there is provided a shaft (27) extending longitudinally of the truck and provided at its ends with universal joints for connection with similar shafts carried by adjacent trucks, or with a driving shaft. The illustration shows a plan view of one of the trucks.

TRUCK SIDE FRAME.

995,949—Albert O. Buckins, Jr., Chicago, Ill., assignor to the National Malleable Castings Co., Cleveland, Ohio.

This truck side frame has two bearing faces at an angle to each other. The journal box is seated on these faces, and a strap bolt is provided to draw and hold the box against the faces.

TRACK AND HANGER FOR FREIGHT CAR DOORS.

995,787—Edward A. Hill, Chicago, Ill., assignor to Chicago Car Door Company, of Chicago, Ill.

The hanger on this door has a horizontal slot below the upper edge of the door. The track bar is fastened to the car above the door with bolts; the lower part of the track bar is bent over into a flange, which projects into the slot in the door hanger.

CAR CONSTRUCTION.

995,560—Harry M. Pflager, St. Louis, Mo.

The side track frames (carrying two or more journal boxes) in this car are pivotally connected to the under frame. Connections are provided between the ends of each pair of frames in a manner to hold them parallel. The connected frames at one end of the car are movable independently of the connected frames at the opposite end of the car.

995,560.

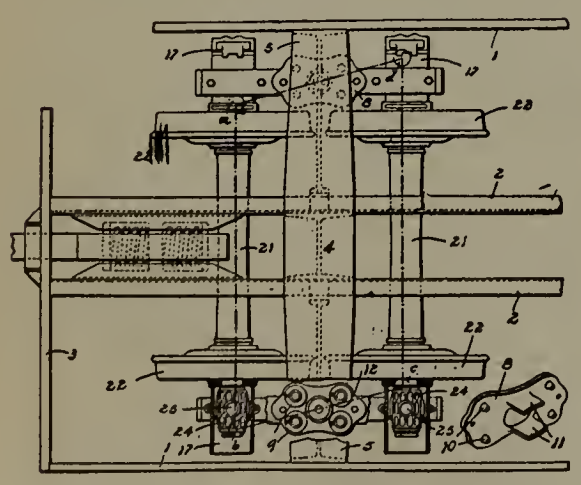

995,787.

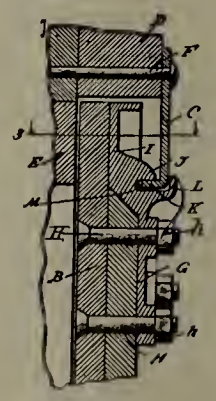

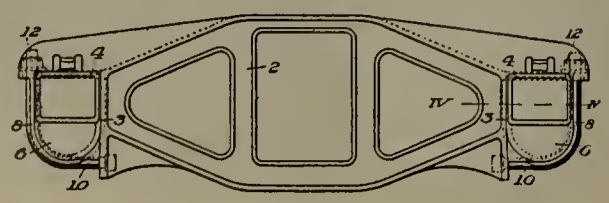

Motive Power.

The Sumter & Choctaw Ry. has for sale a hoisting engine complete with boiler. E. F. Allison, Pres., Bellamy, Ala.

The Pennsylvania Lines West, it is reported, will soon be in the market for 60 locomotives.

The Grand Trunk has given an order to the Lima Locomotive & Machine Co. for four mogul type locomotives to be delivered to the Detroit & Toledo Shore Line branch in October.

The Wabash is in the market for 15 consolidation and 5 switching locomotives.

The Lousiana & Northwest has given an order for 3 ten-wheel locomotives to the Baldwin Locomotive Works; cylinders 18 in. x 26 in., diameter of driving wheels 56 in., and total weight in working order 130,500 lbs.

The Grand Trunk has ordered 10 compound consolidation locomotives from the American Locomotive Company; cylinders 22½ in. and 35 in. x 32 in., diameter of driving wheels 63 in., and total weight in working order 210,000 lbs.

It is reported that the Chicago, Burlington & Quincy, has placed an order for ten Mikado locomotives with the Baldwin Locomotive Works.

The Bingham & Garfield has ordered 1 Mallet articulated compound locomotive from the American Locomotive Company; cylinders 26 in. and 41 in. x 28 in., diameter of driving wheels 51 in., and total weight in working order 450,000 lbs.

RAILWAY MASTER MECHANIC

Established 1878

Published by THE RAILWAY LIST COMPANY

WILLIAM E. MAGRAW, Pres. and Treas.

CHAS. S. MYERS, Vice-Pres. LYNDON F. WILSON, Managing Editor
C. C. ZIMMERMAN, Bus. Mgr. OWEN W. MIDDLETON, Assoc. Editor
J. M. CROWE, Mgr. Central Dist. KENNETH L. VAN AUKEN, Assoc. Editor

Office of Publication: Manhattan Building, Chicago
Telephone, Harrison 4948
Eastern Office: 50 Church Street, New York
Telephone Cortlandt 5765
Central Office: House Bldg., Pittsburg, Pa.

A Monthly Railway Journal

Devoted to the interests of railway power, car equipment, shops, machinery and supplies.
Communications on any topic suitable to our columns are solicited.
Subscription price, $2.00 a year; to foreign countries, $2.50, free of postage. Single copies, 20 cents. Advertising rates given on application to the office, by mail or in person.
In remitting, make all checks payable to The Railway List Company.
Papers should reach subscribers by the 16th of the month at the latest. Kindly notify us at once of any delay or failure to receive any issue and another copy will be very gladly sent.

Entered as Second-Class Matter June 18, 1895, at the Post Office at Chicago, Illinois, Under Act of March 3, 1879.

Vol. XXXV Chicago, September, 1911 No. 9

CONTENTS.

Editorial—
- Terminal Improvement at Bloomington 405
- Steel Passenger Equipment 405
- Traveling Engineers' Association 405
- Park on Courtesy 406
- The Electric Locomotive 406

How About It, Mr. Macbain? 407
Meeting of C. I., C. I. & C. F. Assn....407
Vivid Description 407
Railway Accidents 407
Reminders 407
New Locomotive Terminal, Bloomington, Ill., C. & A. R. R. 408
Report of Traveling Engineers' Convention....413
Shop Kinks 419
Efficiency in Railway Operation 420
Reminiscences of a Master Car Builder—III....421
Heavy Passenger Locomotive, P. M. R. R. 423
Value of Practical Instruction on Fuel Economy....423
Mallet Superheater Locomotive, D. & H. Co. 427
Facts About Asbestos 429
Alternating Current in Service 429
Trials of Construction and Round House Work....433
Recent Development in Testing Boiler Tubes....434
Personals 435
New Books 436
Among the Manufacturers 437
- Novel Freight Car 437
- New Literature 437
- Gauge Glass Protector 438
- Columbia High Power Chuck 438
- Freight Handling Crane 439
- Hisey Portable Grinder 440
- Landis Staybolt Cutter 440
- Dake Reversible Engine 440
- New High Speed Hack Saw 441
- New Automatic Steam Engine 442
- Industrial Notes 443
- Recent Patents 444

TERMINAL IMPROVEMENT AT BLOOMINGTON.

Several of our best known mechanical officials will note with particular interest the article published on another page of this issue, on the recent locomotive terminal improvements of the Chicago & Alton at Bloomington, Ill. During the past thirty years these men as heads of the Alton's mechanical department have, for periods more or less lengthy, wrestled with the problems at Bloomington.

One of the most notable improvements is a turntable long enough to turn the company's engines and with power enough to turn them handily and quickly. An up-to-date boiler washing plant in the new round house would deserve a more detailed description were it not for the fact that it is so well known. The cinder pits have been laid out most conveniently and their facilities are most modern. J. T. McGrath, the present superintendent of motive power is to be most heartily congratulated as more fortunate than his predecesors in having obtained adequate facilities for the handling of engines, probably for the first time in the later history of the road.

STEEL PASSENGER EQUIPMENT.

The steel car received its first severe test in a derailment of the Pennsylvania special, during the middle of August, and proved all that has been claimed for it. Due to a defective switch, the train left the track while running at a very high rate of speed and struck a freight train standing on a siding, ditching the first five coaches of the passenger train. The first two coaches were badly battered up, and in them a small blaze started, which was quickly controlled. The special was running double headed, and as was almost inevitable, there were casualties at the operating end, but nearly all the passengers escaped with more or less serious cuts or bruises, the shock throwing those in the dining and smoking cars on the floors. Had the train been composed of the old wooden cars, it is almost certain that scores would have been crushed and killed, and that the fire would quickly have spread throughout the train, causing an added loss of life. Since 1906 the Pennsylvania has been specifying steel construction for all new coaches, and at present it has more steel cars in operation than any other railroad in the country. The lives probably saved in this one wreck more than compensate for the entire cost.

TRAVELING ENGINEERS' ASSOCIATION.

The nineteenth annual convention of the Traveling Engineers' Association has passed into history. A fairly complete report will be found on another page of this issue. The rather amazing success of this convention may or may not have been principally due to the fact that the meeting place was in the city of Chicago. There is room for difference of opinion on that subject. From the fact that the association voted to go to Atlanta, Georgia, for its 1912 meeting it would appear that its members were not impressed with the importance of Chicago as a meeting place making for a record attendance. Among the supply men the disappointment at the attitude of the majority of the members was evident.

The executive committees have still to consider the subject, the vote in open meeting being only a means of deciding

preference. Three cities will be considered in the order of the vote result, namely: Atlanta, Chicago and Washington, D. C. If it is found that Atlanta is unable to offer accommodation to the large attendance expected, Chicago will be again chosen. In making the final decision the committees should not lose sight of the fact that had the convention of 1911 been held in any other city, the exhibits would have been considerably fewer. If we are to judge from past experience, not over two other cities could have brought twenty-five per cent of the number showing in Chicago. From now on, however, this feature of the convention will be guaranteed by the aroused interest of the supply manufacturers, and while the selection of another city will not cripple the exhibit display, it will temporarily stunt its growth. It is hoped that the executive committee will consider this matter carefully before making the decision.

PARK ON COURTESY.

W. L. Park, vice-president and general manager of the Illinois Central, has recently issued a bulletin on "Courtesy," which is of particular interest to those employes who come in daily contact with the public. The following paragraph, however, will bear thinking over by employes in any department, regardless of their rank:

> "That courtesy is essential to those who desire advancement, must be accepted as a fact. It is essential not only in the transaction of ordinary business, as between employes and officials, but as a stock in trade in dealing with the public, of value not only to the ambitious employe, but to the company. Without it, men with other talents and qualifications seemingly sufficient, have failed; with it, those lacking in many other ways have been successful."

THE ELECTRIC LOCOMOTIVE.

A great deal of experimentation in the use of electrical motive power has interested railway technical men within the past few years. The adoption of the electrical locomotive in suburban service some years ago by the New York, New Haven & Hartford R. R. and the New York Central & Hudson River R. R. caused a great deal of comment and furnished a precedent for study. Undoubtedly there are classes of service to which the electric locomotive is excellently adapted. The smoke evil has been and is a factor of such great importance in cities that electrical power is given the benefit of an argument which in some cases outweighs even a tremendous difference in first cost and cost of maintenance in favor of steam.

The operation of trains in long tunnels is fraught with considerable danger when the steam locomotive is used. Hard coal fuel has not eliminated this element of danger, and the advent of the heavy electric locomotive has turned the trick. Under such conditions as that last mentioned, the argument of cost has no firm foundation, and as a result we note the frequent substitution of electricity for steam in the operation of trains through long tunnels in different parts of the country.

The speed of the electric locomotive can, perhaps, be made higher than that of the steam engine, but while it is as much a question of feasibility in the train as it is in the engine to operate at higher speeds than are now customary, this argument fails of purpose.

Water power is the solution of the problem of electrical operation of trains. Free power offsets the increased cost of installation, operation and maintenance of electric equipment, including transmission lines, stationary power apparatus, etc. That there are vast resources in the available water power of the country cannot be denied. An interesting fact is evidenced when it is found that often water power can be developed in localities where fuel of the desired quality is most costly. For this reason we may expect to see many "electric zones" incorporated in the great railroad systems which operate through the mountains of the west.

In the region of the Rocky mountains the lignite from the local mines has never been burned with any great degree of success in the firebox of a modern locomotive. Haulage of a better class of fuel is expensive and hence the logical development of water power projects.

The electric locomotive in itself is well beyond the experimental stage, and in the most recently developed type—single-phase, alternating current—is less complicated as a machine and as positive in operation, as the steam locomotive. In fact, there are many points of similarity between the two. The side rod electric locomotive has a center of gravity about as high as has the steam locomotive of equal power, and the effect upon the track is about the same. In the case of the power the balance of reciprocating and rotating parts is slightly better, owing to the difficulty of counter-balancing a rod which has a rotary motion at one end and a reciprocating motion at the other, as is the case in the main driving rods of a steam engine.

In operation the electric locomotive is perhaps simpler to handle than is the steam locomotive in that certain fixed rules may be laid down for the guidance of the engineer in all details of train acceleration. In deceleration the air brake is used in precisely the same manner in both instances.

S. A. Bickford in a paper read before the Traveling Engineers' Association, August 30, 1911, has the following to say regarding power consumption in the electrical zone:

"One of the largest items of expense on a railroad is the power cost, that is, the coal and water bill, and the handling of the electric locomotive figures in this item the same as the steam locomotive. The steam locomotve engineer sees the rapidly diminishing coal pile, and the fear that water supply may fail serves to remind him of the necessity for care and close attention in the use of these supplies. On electric locomotives the source of power may be far removed and the evidence of wastefulness not apparent unless special attention be given to this matter.

"The source of greatest loss is the consumption of power without any actual work being performed. As stated before, there are predetermined positions on which the controller handle can be kept for any considerable length of time; these are known as the running positions. In accelerating trains, the speed attained may be such that to continue with controller handle in that position, the locomotive or train would exceed time table or speed restrictions. Under these

conditions frequently the controller handle is moved to the next highest running position and the speed at that time may be very much higher than could be attained had the controller handle been placed in the latter position at the start. Under these conditions all current drawn is absolute waste until the deceleration of train has reached a point where speed becomes constant due to torque on motors; this may be for several miles."

HOW ABOUT IT MR. MACBAIN?

Denver, Colo., Sept. 6, 1911.

Editor Railway Master Mechanic: During one of the intermissions between sessions of the convention of the Traveling Engineers in Chicago, I had occasion to walk south on Clark street. My course took me past the city ticket office of the Lake Shore & Michigan Southern Ry. Noting, in the large window of this office, a large illuminated illustration of a train purporting to be the 20th Century Limited, I stopped for closer examination with pleasurable anticipation of viewing locomotive details. Imagine then my disappointment in finding that the artist has done a ridiculously superficial job. The illustration shows one of the large new Pacific type locomotives used by the Lake Shore in fast passenger service, and while it would not seem to have been difficult to have portrayed it accurately with respect to detail, this was not done.

The officials of the New York Central system may well be proud of the equipment of this train and its accurate portrayal in some such form at this would be of educational value, as well as an interesting and novel attraction. The resulting effect, however, of a view of this illuminated window display upon the mind of the person with the slightest eye for mechanical detail, is one of disgust. It would seem that the veriest of imbeciles would hesitate to show a reverse reach rod projecting through the spokes of a drive wheel or the rear end of a Walschaert gear connecting rod suspended in mid air by some unseen hand.

If the owner of an extensive stock farm were to portray one of his prize steers in a life size painting and this painting showed the steer equipped with only three legs or a tail at the front end, the farmer's sanity would be questioned.

It is said of Remington that nine-tenths of his success as a portrayer of life in the far west was due to the fact that saddle ties were where they should be and that gun locks were pictured accurately.

If the Lake Shore passenger department fails to see the rediculous side of this thing, it would seem that our well-known friend, D. R. Macbain should step in with a protest from the standpoint of the head of the mechanical department.

R. A. Roberts.

MEETING OF THE C. I. C. I. & C. F. ASSN.

The twelfth annual convention of the Chief Interchange Car Inspectors and Car Foremen's Association was held at the Boody House, Toledo, O., on Aug. 22, 23 and 24, 1911. The convention was remarkably successful, not only in the number attending but in the enthusiasm and interest shown by those present. A noticeable feature was the number of members who took part in the discussions, the talking not being confined to a few. This, together with the good acoustic properties of the hall, made the discussion and talks of much value to all concerned. Mr. Boutet having served as president for seven consecutive years declined to run this year, and F. W. Trapnell, chief interchange inspector at Kansas City, Mo., was elected president, with J. L. Starke, general inspector on the Hocking Valley at Columbus, O., as vice-president. Stephen Skidmore was unanimously elected to succeed himself as secretary. H. Boutet continues as a member of the executive board, together with the following who were elected to the board: W. R. McMunn, J. L. Hodson, F. C. Schultze, A. Kipp, E. R. Campbell, J. J. Gainey and F. H. Hanson. A complete report of the proceedings will be given in the October issue of the Railway Master Mechanic.

VIVID DESCRIPTION.

The following story went the rounds several years ago but has recently been revived. It has taken well thus far. Let us hope this is a farewell tour:

A young lady on a visit in an eastern town went out to inspect the locomotive works, and here is how she described it when she got home: "You pour," she said, "a lot of sand into a lot of boxes, and you throw old stove-lids and things into a furnace, and then you empty the molten stream into a hole in the sand, and everybody yells and swears. Then you pour it out, let it cool and pound it, and then you put in it a thing that bores holes in it. Then you screw it together, and paint it, and put steam in it, and it goes splendidly, and they take it to a drafting-room and make a blue print of it. But one thing I forgot —they have to make a boiler. One man gets inside and one gets outside, and they pound frightfully, and then they tie it to the other thing, and you ought to see it go!"

RAILWAY ACCIDENTS.

We are often reminded in lugubrious statistics and heated orations that American railroads are peculiarly deadly to their passengers. We are told of the superior safety of European travel; and not infrequently we are told that drastic government supervision or even government ownership is necessary to put an end to the slaughter of passengers by the steel highways of America.

The contrast between American and European railroading is just a shade more than half true. The deductions from it are not true at all. Two-fifths of the American railroads have as good a record as the railroads of Europe in the matter of safety—and an infinitely better record in most other things.

There is one American railroad system which comprises 17,960 miles of rails. In the year 1910 it carried 49,491,000 passengers. Counting the average distance of the journey, this was equivalent to carrying 30,000,000,000 passengers one mile each. It was almost exactly ten per cent of the entire railroad passenger traffic of the United States. Yet in 1910 this system did not cost the life of a single passenger.

This, mark you, was achieved under "American conditions" —those mysterious things which are so often invoked at the inquest. It was achieved without "government ownership" —that panacea so often proclaimed from the platform. The triumph of this great system was won through discipline, safety devices, and plain common-sense. It can be duplicated anywhere by the same commonplace things.—George L. Knapp in September Lippincott's.

REMINDERS.

Life is full of dangerous crossings, and Conscience is the Flagman.

It is unfortunately true that the Fruit of Discord is frequently preserved in Family Jars.

A promise should not be kept too long. It were far better to fulfil it at once and thus be rid of it.

The proof of the Pudding may be in the eating, but what does it avail us when it is too late to correct the proofs?

The Laws of Supply and Demand are inexorable. The Freckle would be considered a beauty-spot if there were only two or three of them.—John Kendrick Bangs in September Lippincott's.

New Locomotive Terminal, Chicago & Alton, at Bloomington, Ill.

The locomotive terminal facilities of the Chicago & Alton Railroad at Bloomington having become inadequate to handle the large number of locomotives required by the great increase of business during recent years, and more so as the size of the locomotives has increased proportionately with the business, the company authorized last year a considerable enlargement of this terminal plant, and commissioned Westinghouse, Church, Kerr & Co. to design and build a new round house with a turntable, coaling station, water tanks and cranes, sand storage and drying house, and cinder pits. These new facilities are located upon land acquired for the purpose, immediately adjoining the former locomotive terminal on the west side of the present railway shop and terminal property. The soil was of good character for the most part, well suited for carrying the structures, so that the foundation work presented no difficulties.

J. T. McGrath, Supt. Rolling Stock, C. & A. R. R.

Round House.

It is of interest to note that the new round house is the third one constructed at this terminal, each one having been considerably larger than its predecessor.

The round house has 44 stalls (one of which is occupied by the boiler washing system), with a 100-ft. turntable. The circle of the building, which would be filled out by a total of 50 stalls, is thus almost completed. Its inside depth is 100 ft., with an annular space about 65½ ft. wide between the round house door posts and the turntable pit. The building is of brick, with flat wooden roof supported on timber posts, and is divided into four sections by 13-in. fire walls. The floor throughout is of concrete. The rear walls between the main supporting pilasters are about 8½ ins. thick and rise to 4 ft. 3 ins. above the floor level; above this, all the remaining space in each bay between pilasters is given entirely to windows so that the interior is well lighted; and as the space between the pilasters is bridged by timber girders supporting the roof, very little else besides windows can be injured in case a locomotive accidentally goes through the round house wall. The foundations throughout are plain concrete footing.

The door posts are on 14½ ft. centers, the doors being of the double swinging wooden type, about 17½ ft. high, with 5 ft. transoms above.

The engine pits are 77 ft. long, the bottoms sloping from 2½ ft. depth at one end to 3-ft. at the other. Twelve pits, in two sections, are intersected by driver drop pits; and five adjoining engine pits in one section are intersected by a truck drop pit. All pits are of concrete construction, all side walls being 2 ft. 4 ins. thick to provide a jacking ledge. The forward end of each engine pit is arranged with a depression outside of each track rail, 16 ins. wide and 11 ins. deep below the rail head, to permit the ready insertion of jacks under bumper beams of low-wheeled engines. The en-

Ashpits and General View of Roundhouse, Bloomington, Ill., C. & A. R. R.

gine pits are fitted with hinged track rails where intersected by the truck and driver drop pits, and the latter are bridged with movable I-beams to support the hinged rails when swung around. The drop pits when not in use are covered over with steel trap doors.

The building is heated by the indirect system, using hot air, which is supplied by two 180-in. engine-driven fans capable of completely renewing the air in the building every 18 mins. The two fans with their heating stacks are mounted in separate fan houses, about 24 ft. square, built as small additions to the round house. The hot air is conducted from each fan by two main ducts formed of concrete below the floor, running each way from the fan house along the rear wall of the round house. Branch ducts of round tile distribute the hot air from the main ducts to the engine pits; short branch ducts of sheet metal spaced two under each window, also conduct hot air from the main duct to register openings in the rear wall 3 ft. 6 ins. above the floor. The largest of the main ducts is 47 ins. wide by 60 ins. deep at the fan, and delivers hot air to fifteen stalls, tapering to 22 ins. wide and 24 ins. deep at the last stall. Heat is supplied to the fan pumps by live steam (no exhaust steam being available), from the power house, through a 6-in. main which also furnishes steam for the fan engines and the boiler washing pumps and to the steam blower connection at each stall for blowing up locomotive fires.

Boiler Washing System.

For saving heat and shortening the time that would otherwise be lost in locomotive boiler washing and placing washed boilers under steam again, a boiler washing system is provided which is that covered by the patents of the National Boiler Washing Co., Railway Exchange Bldg., Chicago. Briefly, the operation consists in blowing off the locomotive boiler into a wash-out tank through a filter, the steam in the blow-off water being liberated by the reduction in pressure and used to heat the fresh make-up water while the latter is on its way into the filling tank, whence it is pumped as required into boilers already cleaned, at a temperature of about 180 degs. The filtered blow-off water is pumped from the wash-out tank as required for boiler washing, being mixed with as much fresh cold water as is needed to make the temperature convenient for handling.

The apparatus consists of a closed horizontal cylindrical tank 10 ft. in diameter by 20 ft. long for the filling water with a 14 in. x 10 in. x 12-in. duplex pump; a similar tank and pump being provided for the wash-out water; also an open heater, a filter, a sludge tank, and the necesary piping and valves. This apparatus fills the space ordinarily occupied by one stall in the round house, and has capacity for blowing off three, washing three, and filling three locomotives at one time. Separate pipe connections for blownig off, washing and filling are provided at each stall; also a cold water pipe

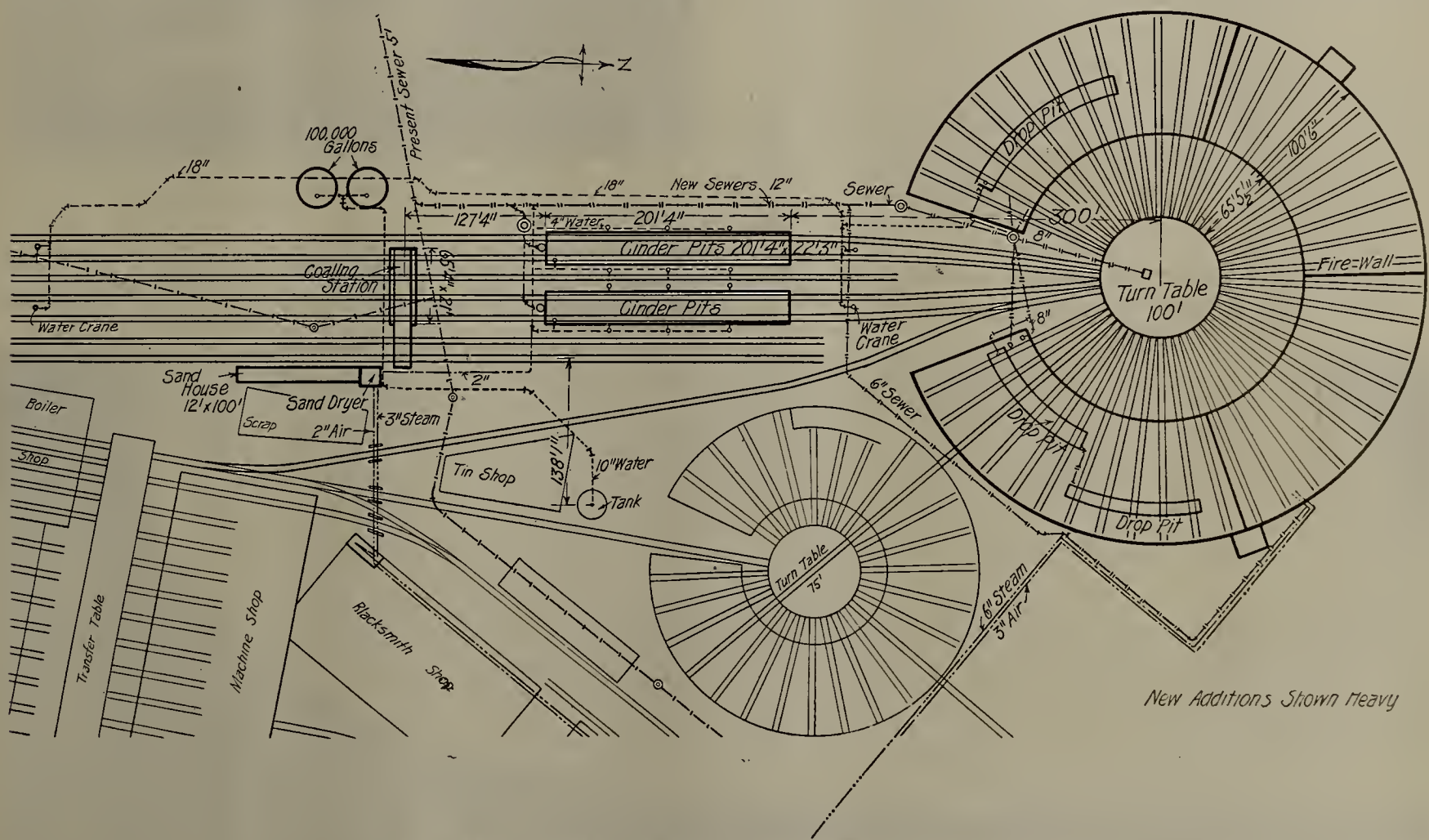

General Layout of New Terminal, C. & A. R. R., Bloomington, Ill.

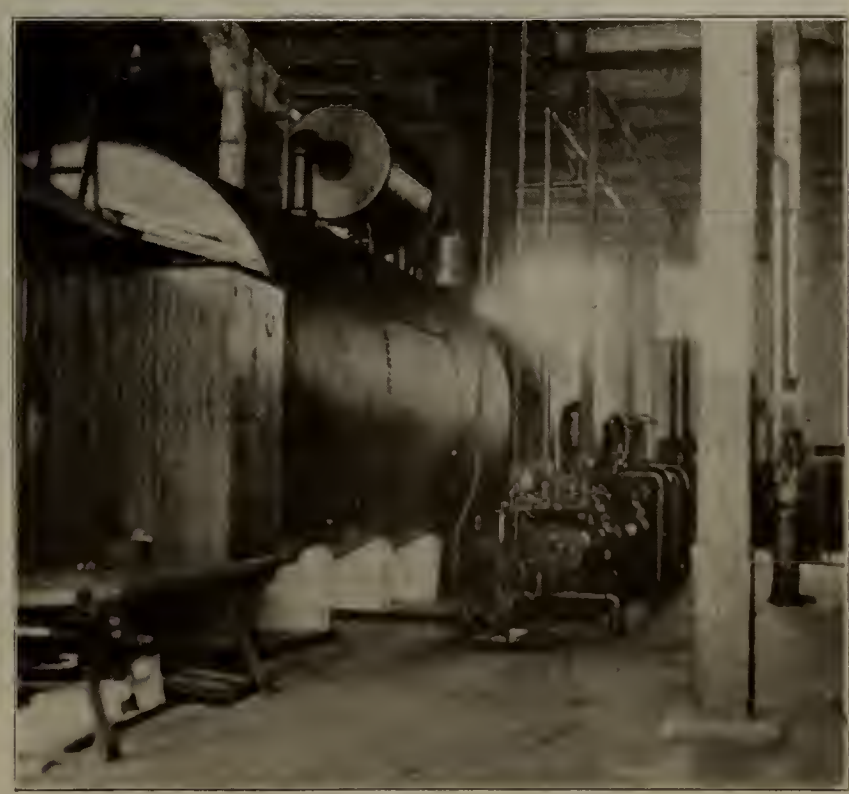

View of National Boiler Washing Plant in Roundhouse.

connection for general service, floor washing and the like, and a compressed air service pipe, are provided at alternate stalls. There is also a separate fire line connected to the city water system, with sixteen 2-in. plugs distributed throughout the round house for fire protection.

All service piping except the boiler blow-off pipes, which run overhead to the water storage tank, is laid in trenches in the floor, with iron cover plates. This system of trenches includes a pipe tunnel about 4 ft. wide and 5 ft. deep, which follows a circular course at the front of the round house, just within the doors, lateral ducts radiating to the engine stalls.

The house is ventilated by 32 in. x 24-in. cast iron roof ventilators placed over every other stall. The smoke jacks are of asbestos, molded to form, and bolted together. The hoods are 10 ft. long, so as to permit of some movement of locomotives without removing the stacks from under the jack.

Artificial illumination is provided by 250-watt tungsten lamps, two of which are suspended by short pipe fixtures from the roof directly over the spaces between stalls. The lamps are of the 110-volt type, and the two lamps in each stall are in series on the 220-volt 2-wire distribution system, and are controlled by wall switches. Each stall is also provided with a convenient arrangement of wall brackets for attaching extension lamps and portable motors for tools.

center, the center casting being supported on a reinforced concrete footing about 6 ft. 5 ins. deep and 15 ft. square at the base, which is reinforced by 1-in. square rods. The ring wall is of plain concrete, extending 9 ft. 9½ ins. below the

Another View of Boiler Washing Apparatus.

top of the rail, and is 8 ft. 8 ins. wide across the base, and 2½ ft. wide at the top. The circle rail is spiked on wooden blocks embedded in concrete. The pit is drained by 8-in. tile

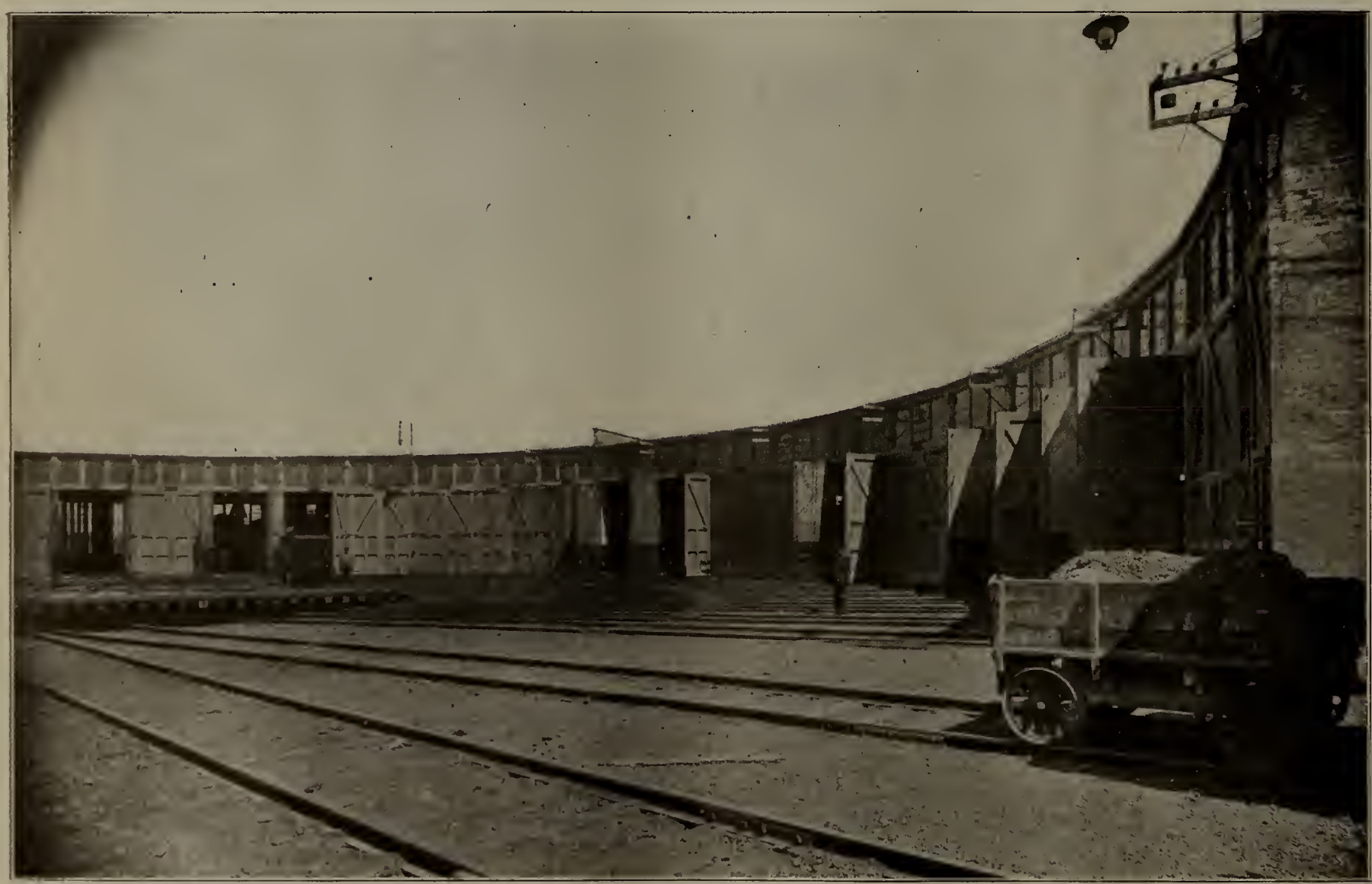

Roundhouse and Turntable, C. & A. R. R., Bloomington, Ill.

All wires for electric service are rubber covered and drawn into galvanized metal ducts of the Sherarduct type. For lighting the turntable and tracks outside the round house doors, four flaming arc lamps are provided, mounted on wall bracket fixtures at suitable intervals on the front of the round house.

Turntable.

The 100 ft. table is of the deck type and electrically operated. The turntable girders are about 7½-ft. deep at the

drain leading to the sewage system. The turntable was constructed by the Toledo Bridge & Crane Co. The turntable tractor was furnished by George P. Nichols & Bro., Chicago, and utilizes a 20 h. p. d. c. motor of the crane type, receiving current from wires carried by a 2-in. Sherarduct conduit laid under the bottom of the pit and coming out through the center. There is also provided an electrically driven winch for pulling dead locomotives on and off the turntable.

Coaling Station.

The locomotive coaling station is of the elevated bunker type, extending across the tracks and comprising a substantial structure of steel and reinforced concrete. There are two receiving tracks, underneath which is a concrete pit about 35 ft. long, 20 ft. wide and 21 ft. deep, in which are located two receiving hoppers and crushers. Each crusher can discharge into either of two independent bucket elevators, each of 80 tons capacity per hour, and with a total round trip bucket travel of 330 ft., which convey the coal from the crushers and distribute it through the bunker from which coal is conveyed to locomotive tenders by discharge spouts. One of the tracks under the coal bunker is used entirely to give ash cars access to and from the cinder pit. Locomotives can be coaled on four tracks, three passing through underneath and one beyond the end, of the bunker structure. There are six coal spouts altogether, two tracks having two each and the other two one each.

This structure being on filled-in land, the concrete footings for the columns extend down about 20 ft., and the sides of the crusher pit are of heavy reinforced concrete construction. The steel supporting columns of this structure are encased in concrete. The sides and roof of the superstructure above the coal bunker are covered with corrugated asbestos siding. The bunker is of the self-emptying type, with inclined bottom section of reinforced concrete, and has a capacity of about 525 tons. The coal crushers, conveying machinery, and delivery spouts were furnished by the Exeter Machine Works. Each conveyor has its own separate 15 h. p. motor, and each crusher is operated by a 25 h. p. motor, all of the 220-volt enclosed d. c. type. The conveyor motors are situated in the top of the bunker structure, and are controlled from the crusher pit. The crusher motors are fitted with outside ventilating pipes.

It should be noted that the coal handling machinery in this station is all in duplicate, and it will be shown below how it can be further relayed in emergencies by using the ash car loading apparatus at the cinder pits.

Sand Storage.

The dry sand supply is stored in three bins so arranged as to distribute to the four tracks, and with a capacity of about 7½ cu. yds. storage for each track. Green sand is stored in a bin of about 400 cu. yds. capacity, located on the ground alongside the coaling station, and is dried in

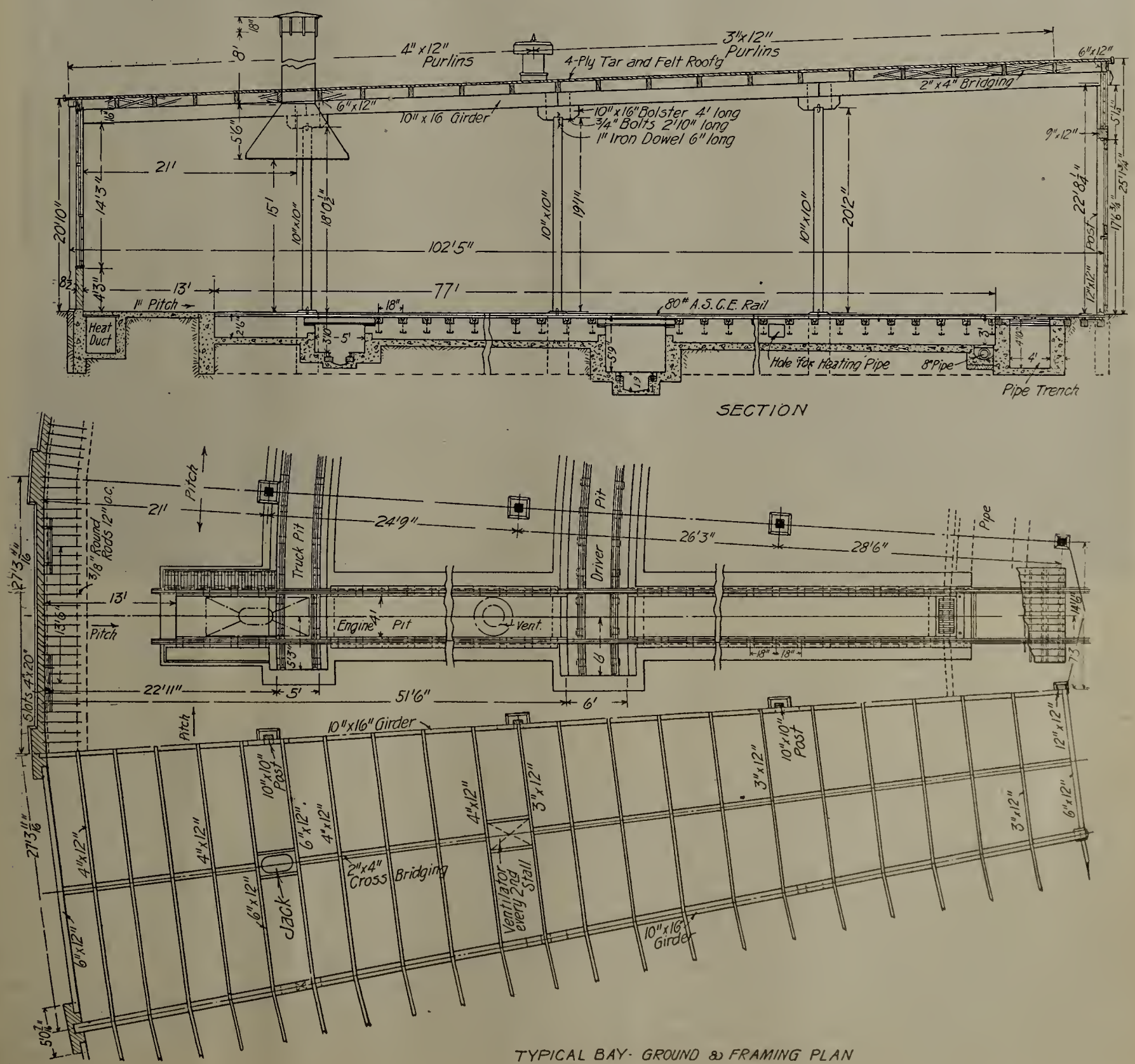

Bloomington Roundhouse, C. & A. R. R.

two steam dryers, screened, and elevated by air pressure into dry sand storage bins arranged in the coal bunker structure directly underneath the coal pocket, whence it is fed by spouts to the locomotive sand boxes as required.

Water Supply.

The general water service, not only for locomotive tanks, but for supplying the miscellaneous needs of the terminal, is taken from the rairoad company's regular water supply system, which for the enlarged terminal has been supplemented by two new 100,000-gal. wooden storage tanks located near the center of the locomotive terminal yard, on a steel structure 20 ft. high, the tanks themselves being 30 ft. in diameter and 20 ft. in height. From these tanks water is distributed to four 12-in. water cranes, two of which are located near the round house end of the terminal yard, and the other two at a point about 667 ft. toward the other end. The tanks and cranes are connected by an 18-in. continuous main. A supply is also carried into the round house for general service purposes. The tanks and water cranes were built by the U. S. Wind Engine & Pump Co.

Cinder Pits.

Two cinder pits are located in the four tracks which lead to the round house. Each pit serves two tracks, which are 16 ft. between centers, the two pits being parallel and 48 ft. from center to center. Each pit is 200 ft. long and about 8½ ft. deep, with sides and bottom of concrete. The outer rail of each track rests upon the concrete retaining wall of the pit. The inner rail is supported upon 18-in. I-beam stringers encased in concrete, and carried on concrete piers 10 ft. apart. The sides of each pit are sloped towards the center, causing the cinders to accumulate in the open space between the tracks. For loading these cinders a travelling crane of 80 ft. span is provided, spanning both pits, from which is operated a grab bucket, which hoists the cinders from their dump pit and deposits them in cars upon the central track between the pits. The girders of the crane runway are 20 in. I-beams, supported on lattice columns at 20 ft. intervals, the columns resting on substantial concrete footing. The crane is electrically operated, with four motors, for travel, trolley, hoist and bucket opening respectively. The cinder pits are usually kept filled with water to a depth of 4 ft. or 5 ft. This equipment has also been successfully used for coaling locomotives directly from loaded coal cars placed on the cinder track.

Steam Supply.

The steam needed for the round house equipment is supplied from the main power house by a 6-in. line about 760 ft. long, placed underground in a conduit of 15-in. channel tile pipe, laid in 2-ft. lengths, split longitudinally. The lower half is laid first, and every 14 ft. a roller chair is placed on a concrete bed for carrying the pipe, the upper half of the tile conduit being placed after the pipe and its covering are in position. The steam pipe is covered first with a single thickness of 6-in. sectional 85 per cent. magnesia, over which is another thickness of 8-in. sectional covering. The outside diameter of this covering is enough smaller than the interior diameter of the conduit to leave a sufficient runway underneath the pipe to carry away water that may enter, and keeping it clear of the magnesia pipe covering, as both the pipe and conduit are gradually sloped to drain into the sewer system. Under the conduit was placed a 3-in. drain of ordinary farm tile, connected to the same sewer. To provide means for taking care of the expansion, three long right-angle bends were introduced in the pipe line, located in specially constructed manholes and with pipe anchors suitably located. At the lowest points of the system, traps were located for properly drawing of the water of condensation. Between the round house fan rooms the pipe is run in the

Interior of Roundhouse, Bloomington, Ill., C. & A. R. R.

main pipe tunnel and lateral branch system of trenching mentioned in the foregoing description of the round house equipment. Another steam line of 3-in. piping is laid in a similar manner between the boiler house and the sand dryer, by way of the blacksmith shop, and is extended to the cinder pit tracks for the purpose of thawing out engines in the winter time. This line comprises over 1,000 ft. of pipe underground, and about 450 ft. through the blacksmith shop where it is suspended from the roof trusses.

The precautions taken for protecting and draining the steam lines and conduit cannot fail to add materially to the life of the pipe and its covering.

Administration.

The work above described was designed and executed by Westinghouse, Church, Kerr & Co., as engineers and constructors, working under the direction of the railway officials.

Work was begun in the field in July 25, 1910. The cinder pit and one-half the round house went into operation Jan. 15, 1911, and the remaining half of the round house upon Feb. 10. The coaling station was ready for operation about April 1.

The New York, New Haven & Hartford has ordered 14 eighty-ton electric switching locomotives, equipped with quadruple No. 410 motors and one eighty-ton electric switching locomotive, equipped with four No. 410 motors from the Westinghouse Electric & Manufacturing Co.

The Thornton & Alexandria has ordered one consolidation locomotive from the Baldwin Locomotive Works; dimensions of cylinders 16 in. x 24 in., diameter of driving wheels 44 in., and total weight 100,000 lbs.

The Kansas City Southern has placed an order with the American Locomotive Co. for 12 Mallet and eight Pacific locomotives. This company is also reported in the market for ten consolidation locomotives.

The Mobile & Ohio has ordered from the Baldwin Locomotive Works four Mikado locomotives, cylinders 27 x 30 ins., diameter of driving wheels 63 ins., and total weight 239,000 lbs.

The Algoma Steel Co. has ordered two six-wheel tank switching locomotives from the Montreal Locomotive Works; cylinders 19 x 24 ins., diameter of driving wheels 50 ins., weight 123,000 lbs. in working order.

Report of the 19th Annual Convention of the Traveling Engineers Association

This year the Traveling Engineers' Association held a convention which was a real convention and it was hard to imagine that this was the association which one year ago held its meeting at Niagara Falls, Ont. The convention this year was held at the Sherman Hotel, Chicago, on August 29, 30, 31 and September 1, and with the exception of the Atlantic City convention, it was by far the largest and most successful railway mechanical convention held in this country. There were a number of features which contributed to its success, chief among which was the most efficient work of the supply men's executive committee which planned this affair. In the first place, the holding of the convention in the greatest railway center in the world drew a large attendance. In the second place, the topics were live ones and the convention hall was one which was well ventilated and where every speaker could be plainly heard. There was no distraction by outside noises as is often the case. In the third place the exhibits were excellent both in number, attractiveness and in their instructive value.

The convention was opened by President Thayer, Tuesday morning, and after prayer, listened to an address on the "Duties of a Traveling Engineer," by Robert Quayle, superintendent of motive power of the Chicago & North Western Ry. Following Mr. Quayle a short address was given by President Thayer of the Traveling Engineer's Association. This was followed by the report of the officers and other routine business.

The first paper taken up before the convention was "Value of Actual Demonstration compared with that of Oral Instruction in Air Brake Operation" read by John P. Kelly, chairman of the committee. The discussion of the paper ran into the afternoon session. The point was brought out that as the road foreman of engines has so many different runs and engines to cover, it is impossible for him to be as familiar with them as the men who are running on them day after day, and, as one man expressed it, there were a few enginemen who could show him things about that particular run. The best of men occasionally become lax, however, and this is what the road foreman must guard against. The other paper taken up on Tuesday was "The Value of Practical Instruction on Fuel Economy." It was read by V. C. Randolph, superintendent of locomotive operation of the Erie R. R. at Salamanca, New York. Wednesday morning F. O. Melcher, vice-president in charge of operation of the Chicago, Rock Island & Pacific gave an address before the convention. Mr. Melcher, who is secretary of the special committee on the Relations of Legislation to Railway Operation, spoke to the members at some length concerning the important work this committee has for some time had in hand, pointing out the attempts at more general standardization of car and locomotive parts as the opportunity for this standardization is being afforded by the safety appliance, boiler inspection, and other laws. Mr. Melcher's remarks were followed by the reading of the report of the committee on Lubrication of Locomotives Using Superheated Steam, this report being presented by M. H. Haig, mechanical engineer of the Atchison, Topeka & Santa Fe Ry., who was chairman of the committee. The report dealt with the general effect of high and low superheat on the lubrication of valves and cylinders, as well as on packing rings, and piston rod and valve steam packings, and likewise gave consideration to lubricants and methods of lubrication. The committee reported the following conclusions:

1.—The conditions affecting lubrication are practically unchanged by the degree of superheat commonly obtained from the smoke box superheaters.

2.—The flash point of valve oil should be higher than the temperature to which it will be subjected at the point where lubrication is to be effected; oils now available fulfill this condition and if delivered to the proper surface will lubricate satisfactorily.

3.—The hydrostatic lubricator meets the requirements of proper oil delivery. It is considered more satisfactory than the mechanical feed lubricator because of absence of moving parts to wear and get out of order.

4.—The life of common grey iron packing rings is too short to commend this material for use with a high degree of superheat.

Various phases of the lubricating problem with both saturated and superheated steam were presented in the discussion of the above report, more difficulties, apparently, being encountered with the slide valve than with the piston valve; the reason being because of the distortion to which the slide valve is liable when subjected to the high temperatures attained on superheater locomotives. The large cylinders commonly used on later designs of locomotives have naturally

Exhibits at the Traveling Engineers' Convention.

greatly increased the difficulties of satisfactory lubrication and it appears that in many cases, in order to get satisfactory results, it has been found advisable to admit the oil directly through the cylinder walls as well as through the choke plugs in the steam passages or in the valve chamber.

Following a short discussion on Mr. Haig's report, A. W. Whitford, mechanical manager of the Jacobs-Shupert U. S. Firebox Co. gave an interesting talk on this new departure in boiler construction. This paper was doubly interesting because it was illustrated by lantern slides. Mr. Whitford first spoke of the past and present styles of fireboxes, illustrating their defects with the lantern. Modern steel construction, he said, is done in sections and gave as an illustration, the construction of modern office buildings by riveting together

Exhibits at the Traveling Engineers' Convention.

different standard sections. The Jacobs-Shupert firebox is built along this order, each section being formed separately and fastened together to form the complete firebox. This makes it impossible for a break or tear in the crown sheet to extend further than through one section and consequently lessens the dangers of a disastrous explosion. It also has other advantages such as interchangeable sections, the absence of staybolts and the consequent absence of soot and scale at the top of the crown sheet. In reply to a question as to the cost Mr. Whitford said that by making dies for the sections and standardizing them the cost was decreased immensely but that the cost depended entirely on the number ordered. On a large order, say 40 or 50, the cost would be within 2% or 3% greater than that of the regular firebox while with an order of ten or so the cost would perhaps be 5% greater. Mr. Whitford's paper was interesting and instructive.

A paper on the "Proper Methods to be Observed in the Efficient Handling of the Electric Locomotive" was read by S. A. Bickford. Mr. Bickford took up only those features of the elective locomotive as were of interest to the road foremen and spoke of it as the locomotive of the future. Briefly, he took up the differences between the steam and electric locomotive from the operator's viewpoint and made the statement that engineers on steam locomotives made the best engineers for electric locomotives, due to the fact that they are familiar with train operation, signals, etc.

At the Thursday morning's session, Mr. T. A. Foque, general mechanical superintendent of the Mineapolis, St. Paul & Sault Ste. Marie Ry., delivered a very able address in which many interesting phases of the work of the traveling engineer were given consideration. Economy has been the watchword throughout the deliberations on practically every subject presented before this and other conventions for some time past. This was again emphasized by Mr. Foque, who, as bearing on this subject, spoke of the importance of being up-to-date on such maters as smokeless combustion, proper lubrication, the use of practical mechanical appliances and the exercise of extreme care in the selection of intelligent men for service on locomotives. The influence of the traveling engineers in the maintenance of equipment was again touched upon, the men being strongly advised to avoid the cultivation of carelessness among enginehouse repair forces by reporting improperly the defects on equipment, since if the damage is not found as reported, the repair force is very often without means of detecting same, and the engine is allowed to go out without proper attention, resulting in an aggravated condition of the original defect and in all probability an engine failure. As indicating that the traveling engineers' interests are not bounded by long established conditions and practices, it was pointed out that vast fields of investigation are being constantly opened up, as for instance, the introduction of superheaters, mechanical stokers, etc., it being very much to the interests of the men to keep directly in touch with all these later developments in order that satisfactory service may be rendered both by themselves and by the men and equipment under their jurisdiction.

A paper on the "Latest Developments and Improvements in the Automatic Stoker" was one which provoked a considerable amount of discussion. J. R. Lucky was chairman of this committee. The paper took up the Crawford, Hanna and Street stoker, Mr. Lucky stating in the paper that he had been unable to obtain information regarding the other stokers. In the discussion it was stated that the Strouse stoker had passed into history but this was disputed by several who championed this stoker. As one gentleman stated "it had not passed into history but was making history" on his road. The Hanna and Street stokers came in for a large share of the discussion, but it seems that the Crawford machine did not have a representative present. A number objected to the Hanna stoker because it obstructed the doors and interfered with hand firing when it was necessary or when the stoker broke down, also that it prevented looking at the fire. A representative of the Hanna machine in reply said that it could be removed in 30 seconds to 1 minute if necessary. Those unfamiliar with stokers were doubtful as

Exhibits at the Traveling Engineers' Convention.

Exhibits at the Traveling Engineers' Convention.

to the ability of a stoker to place the coal in the firebox in whatever corner it was needed, but from the testimony of those who were using them it appears that there has been practically no trouble from this source. It was stated that with the big engines now in use, the amount of tonnage was limited only by the efforts of the fireman and that the stoker ought to prove at least as efficient in such service.

Thursday afternoon, a paper on "Mallet Compound Engine in road Service" was read by J. B. Daugherty, chairman of the committee. In the discussion of this paper a gentleman from the Norfolk & Western said that since the introduction of Mallets on this road they had been able to dispense with 19 crews on one division, which certainly is a big step in the direction of efficiency.

Later, a paper on "Increased Efficiency of Locomotive and Benefits Derived from Chemically Treated Water" was presented by A. C. Kenyon.

Friday morning, the convention listened to the report of the representative of the Traveling Engineer's Association, at the Atlantic City Conventions. The meeting then listened to the last of the inspiring speakers with which it had been favored, Samuel O. Dunn, editorial director of the Railway

Exhibits at the Traveling Engineers' Convention.

Age Gazette. The last paper delivered before this convention was on "Benefits derived by the use of the Brick Arch." W. G. Tause being chairman of the committee. Considerable discussion was brought forth on the question of the distance of the brick arch to the flue sheet. The meeting was favored by hearing from Le Grand Parish of the American Arch Co., an ex-railroad man of high standing. He stated that in his opinion the nearness of the brick arch to the flue sheet depends on the amount of coal burned and that in smoke elimination the location of the arch against the flue sheet is a great benefit. He also stated that the decrease of smoke is directly in proportion to the length of arch. The meeting seemed to approve very highly of the brick arch, that engine men asked brick arched locomotives and that though more care is required to look after the arch there are fewer engine failures to investigate.

The Friday afternoon session was devoted to routine business. The report of the committee on subjects for discussion next year was read and also the report of the committee in charge of constitution and bylaws. The election of officers resulted as follows: President, F. P. Roesch of the El Paso & Southwestern; vice-presidents, W. C. Hayes, Erie R. R., W. H. Corbett, Michigan Central R. R. and J. McManamy, Pere Marquette R. R. W. O. Thompson, secretary, and C. B. Conger, treasurer, were unanimously re-elected. The choosing of the place of the next meeting caused quite a bit of discussion, some of which was quite humorous. Chicago, Ill., Washington, D. C., and Atlanta, Ga., were placed in nomination. A member stated that he was doubtful whether Atlanta could take care of a crowd of 1500 such as Chicago took care of so easily. In reply a member from the south said that that was the least of their trouble. "Why," said he, "during the years '61 to '65 we entertained over 250,000 down there." The southerners were so active that when the ballot was read it showed that Atlanta was the choice of the majority, it being over 20 votes ahead of Chicago. The final decision, of course, rests with the executive committee.

The Entertainment.

The entertainment committee in charge of the 1911 convention arranged a program of considerable interest. The reception and ball held on Tuesday, August 29, were informal and were attended by practically all interested. The reception occupied the period from 8.30 to 9.30 when the grand march was started.

Wednesday evening at 8.00 p. m., the Steamer Theodore Roosevelt left the harbor with a fairly good passenger list consisting only of the members, the supplymen and guests. The course was along the south shore for several miles and then north to the limits of the city. The boat was then turned back to the harbor. Dancing on board the steamer furnished amusement of the passengers.

Exhibits at the Traveling Engineers' Convention.

Thursday evening a special bill at the Colonial theatre, which had been chartered for the occasion, was most thoroughly enjoyed. The entertainment consisted of several good vaudeville sketches among which was an amateur playlet in which the parts were taken by Messrs. Turner, Fenn, Walsh and Furry. Part of the stage equipment was a miniature steam locomotive and train which was operated under its own steam.

During the days of the convention the lady guests were entertained by automobile rides and trips about the city.

List of Exhibitors.

Adreon Mfg. Co., St. Louis.
American Arch Co., New York.
American Locomotive Co., New York.
American Steel Foundries, Chicago.
Boss Nut Co., Chicago.

S. F. Bowser & Co., Fort Wayne, Ind.
Buck Water Level Indicator, Topeka, Kan.
Chicago Car Heating Co., Chicago.
Chicago Pneumatic Tool Co., Chicago.
Chicago Railway Equipment Co., Chicago.
Commercial Acetylene Co., Chicago.
Crane Co., Chicago.
Detroit Lubricator Co., Detroit, Mich.
Dearborn Drug & Chemical Works, Chicago.
Dickerson Mfg. & Supply Co., Clinton, Ill.
Elgin National Watch Co., Elgin, Ill.
Emery Pneumatic Lubricator Co., St. Louis.
Franklin Ry. Supply Co., New York.
Galena Signal Oil Co., Franklin, Pa.
Garlock Packing Co., Palmyra, N. Y.
Mason Regulator Co., Boston, Mass.
Manning, Maxwell & Moore, New York.
Marshall & Huschart Machinery Co., Chicago.
McCord & Co., Chicago.
Mid-Western Car & Supply Co., Chicago.
Moon Mfg. Co., Chicago.
Nathan Mfg. Co., New York.
National Boiler Washing Co., Chicago.
N. Y. Air Brake Co., New York.
Ohio Injector Co., Chicago.
O'Malley-Beare Valve Co., Chicago.
Parkesburg Iron Co., Parkesburg, Pa.
Parsons Engr. Co., Wilmington, Del.
Paxton-Mitchell Co., Omaha, Neb.
Pilliod Co., New York.

Exhibits at the Traveling Engineers' Convention.

Greene, Tweed & Co., New York.
Hobart Allfree Co., Chicago.
Horace L. Winslow, Chicago.
H. G. Hammett, Troy, N. Y.
Hunt-Spiller Mfg. Corp., So. Boston, Mass.
Interlocking Nut & Bolt Co., Pittsburg, Pa.
Jacobs-Shupert U. S. Firebox Co., New York.
Jenkins Bros., New York.
Johns-Manville Co., H. W., New York.
Leslie Co., Lyndhurst, N. J.
Liberty Mfg. Co., Pittsburg, Pa.
Locomotive Improvement Co., Clinton, Ia.
Locomotive Superheater Co., New York.
Pilliod Bros. Co., Toledo, O.
Pyle-Natl. Electric Headlight Co., Chicago.
Railway & Locomotive Engineering, New York.
Railway Age Gazette, New York.
Railway List Co., Chicago.
Ryan-Johnson Co., Chicago.
Sargent Co., Chicago.
Storrs Mica Co., Oswego, N. Y.
Street Locomotive Stoker Co., Chicago.
Strong, Carlisle & Hammond Co.
U. S. Metallic Packing Co., Philadelphia.
Watson Stillman Co., New York.
Westinghouse Air Brake Co., Pittsburg.

Shop Kinks

An item good enough to publish is good enough to pay for

BOILER CHECK FACING TOOL.

The drawing herewith illustrates a very convenient tool for facing locomotive boiler checks valves without removing them from the engines.

The adjustment of the cutters is made with the small

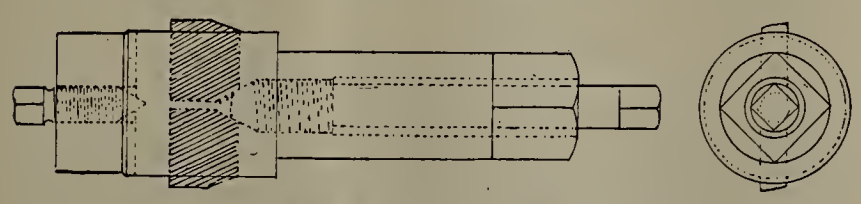

Adjustable Boiler Check Facing Tool.

screw at the cutter end. The tool is turned by means of a wrench. The tool is inserted in the check valve after removing the cap and the facing can be neatly done in a few minutes.

The device is used in the Wyoming shops at the Pere Marquette R. R. It is the idea of August Meitz, tool room

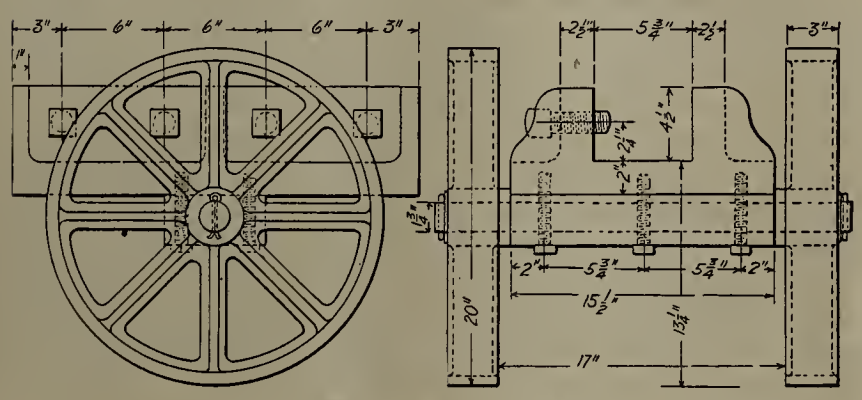

Fig. 1—Frame Car, G. R. & I. Ry.

foreman. It is described here by courtesy of W. C. Groening, shop superintendent.

GRAND RAPIDS SHOPS, GRAND RAPIDS, & INDIANA RY.

If you are looking for handy and efficient ways of doing things, in other words, shop kinks, you are apt to find proportionately more in the small shop than in the large one, as

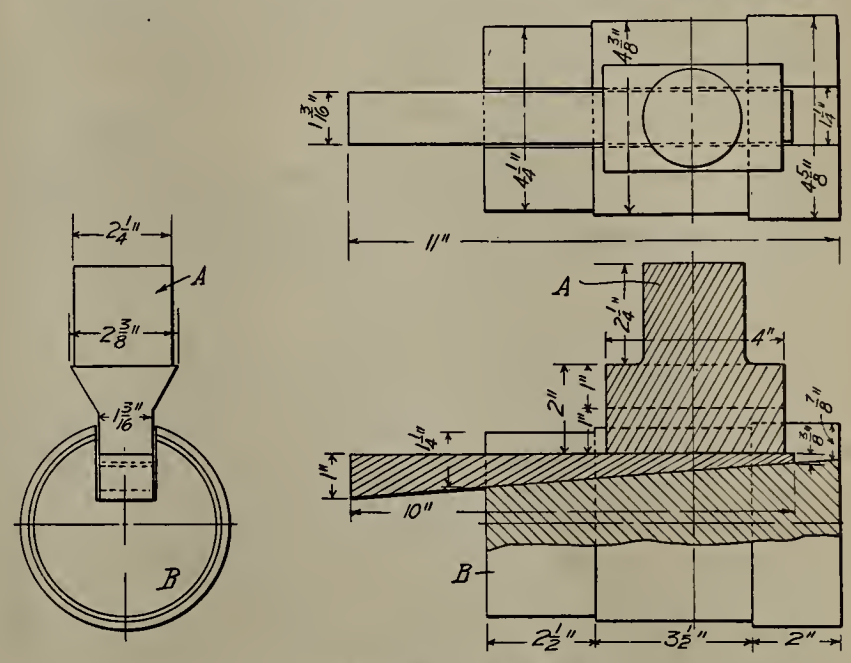

Fig. 2—Piston Rod Disconnector.

the small shop very often has to make up in ingenuity what it lacks in equipment. The following are some kinks in use at the Grand Rapids, Mich., shop of the Grand Rapids & Indiana Ry. The drawings are to a large extent self-planatory. They are published by courtesy of James Keegan, superintendent of motive power.

Figure 1 shows a cart used for moving frames about. The body of the cart is 2 ft. long with a slot along the center

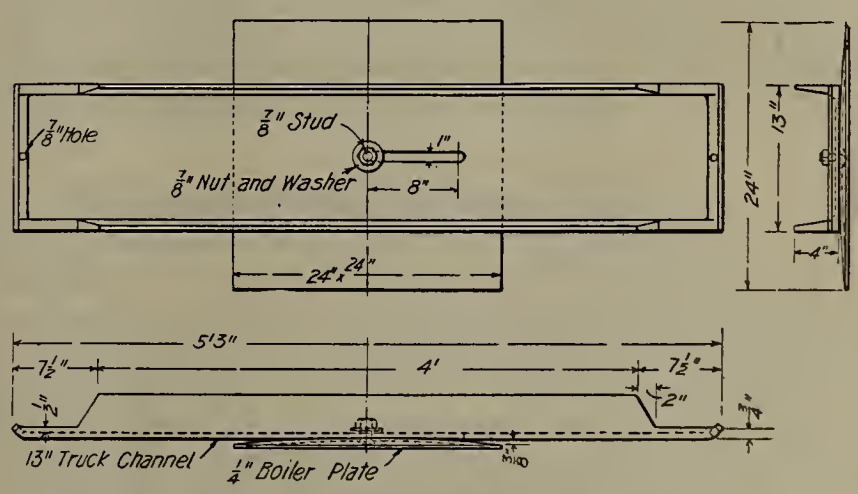

Fig. 3—Turntable for Mounted Car Wheels.

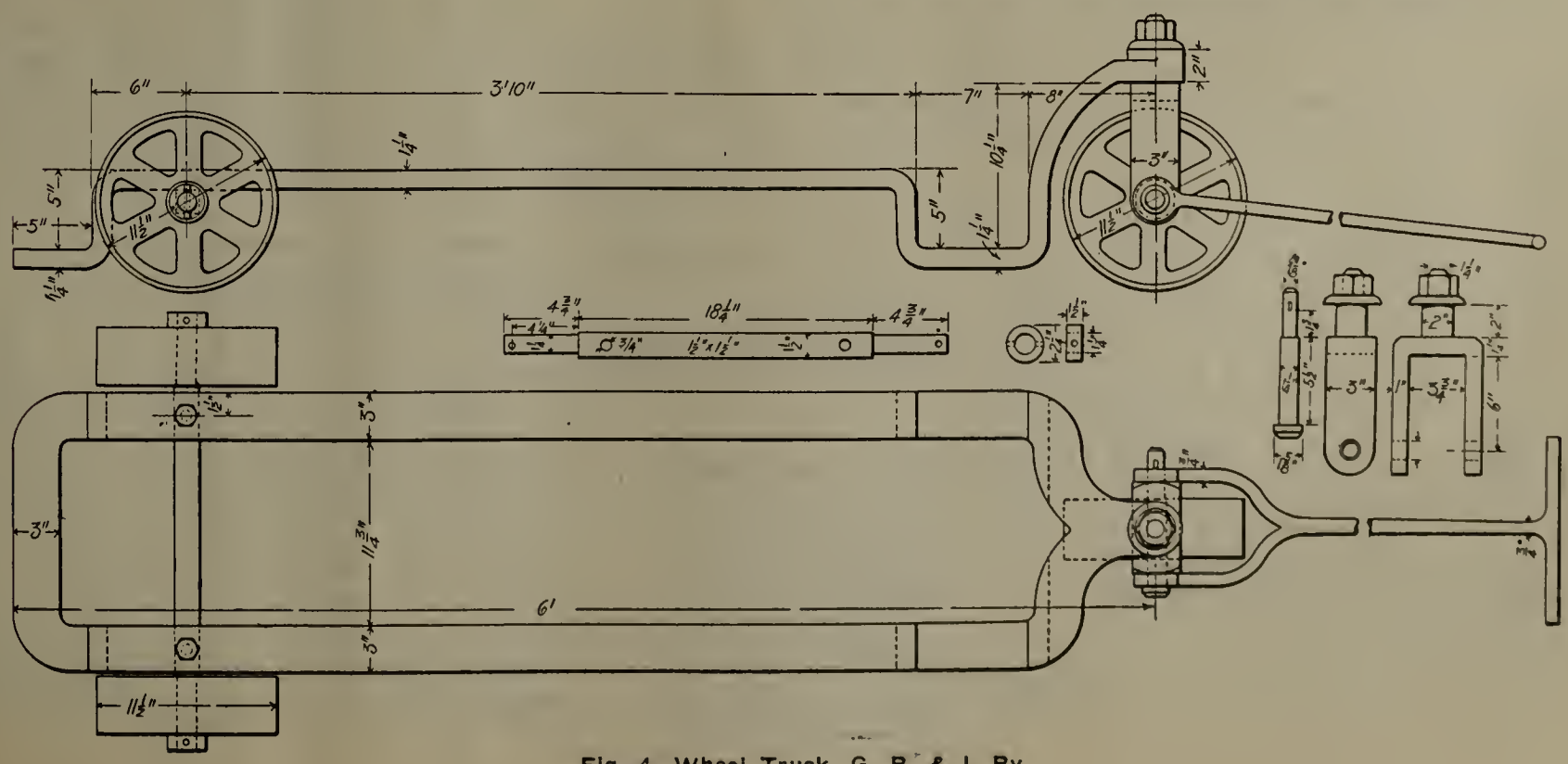

Fig. 4—Wheel Truck, G. R. & I. Ry.

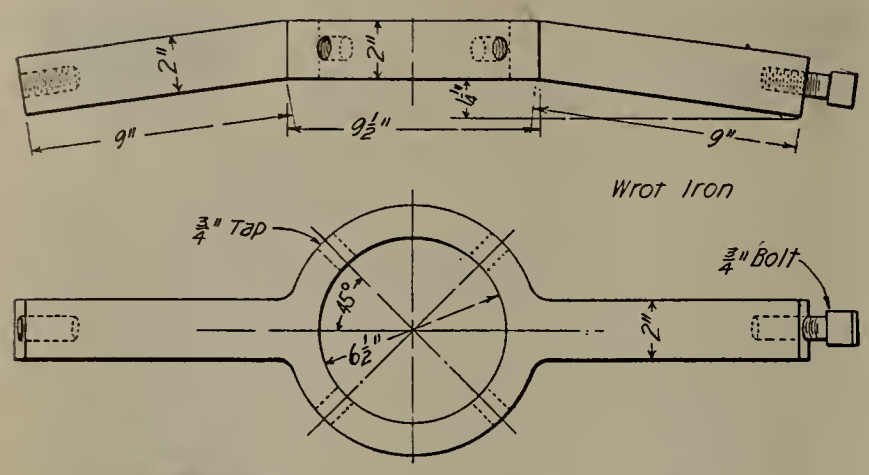

Fig. 5—Dog for Car Wheels in Lathe.

having a width of 5¾ ins. The frame is placed in this slot where it is held in place by four set screws.

In Figure 2 is shown a handy device for disconnecting piston rods from the crosshead. After taking out the crosshead pin the part "A" is slipped in with the circular part lacking the piston rod. Part "B" is then put in the place of the crosshead pin, the wedge inserted and by means of it the piston rod is forced out.

Figure 3 is a portable turntable used for turning mounted car wheels. It is readily constructed from material nearly always available, as it consists essentially of a piece of boiler plate and a 5 ft. 3 in. piece of truck channel arranged as shown. Being very close to the floor, the wheels are easily rolled upon it.

Figure 4 shows a three-wheeled truck which is very handy for trucking wheels, Its construction is single and the two depressed portions of the frame are so close to the ground that the wheels can be rolled on from the turntable or elsewhere. A dog for driving rolled steel car wheels is shown in Figure 5. It is made of one piece of wrought iron.

PUNCH AND DIE FOR BOBBING PLATES.

By W. H. Fetner, M. M., Central of Georgia Ry.

The drawing shows the punch and dies that I am using in connection with the sectional flanging press for bobbing steel running boards, deck plates, aprons, etc. It has been the practice heretofore to do this work under a single stroke punch, consuming considerable time, and as a rule when done this way the spacing is very irregular, depending of course on the care of the workman; however, with this die the spacing is absolutely regular, doing in a minute what would require hours under the old method. It can easily be arranged to be used with any kind of hydraulic press. In small shops where a flanging or bushing press is not available, it could be applied to wheel press at very little cost and be easily applied or removed.

EFFICIENCY IN RAILWAY OPERATION.

By Louis D. Brandeis.

[Editor's Note.—Mr. Brandeis has had a great deal of free advertising within the last few months, and regardless of whether or not his views are regarded seriously by readers of the *Railway Master Mechanic,* a statement of his position at the present time cannot but be of some interest. This article is an expression of opinion which is in substance the same as that incorporated in the recent remarks, by the author, before the Railroad Securities Commission.]

The decision of the Interstate Commerce Commission having established that there shall be no general advance in railroad freight rates, the attention of the public should now be directed towards encouraging improvement in service and operating conditions, and to development of transportation facilities. To accomplish these ends efficiency in management, with incidental economies and an ample supply of capital, are necessary. Railroading being a private business, the corporations must, in order to secure capital as well as ability and zeal in management, offer the ordinary incentives of private business, namely, liberal money rewards.

Reward Efficiency.

Capital or property will yield, according to the degree of judgment and efficiency applied in management, vastly different returns. To secure successful administration of any railroad, the rewards should be proportional to the success. The establishment, therefore, of any rule fixing a maximum return on capital invested in railroads would tend to prevent efficiency by placing a limit on achievement. Today efficiency in management is in danger of being punished, whereas it should be rewarded. Efficiency is naturally reflected in large net earnings; and as no ready means exist for determining whether greater net earnings are due to greater efficiency in management, or to higher rates, large earnings are frequently accepted as evidence that rates are too high, and invite a demand for reduction; whereas, in fact, the large earning may be due wholly to better judgment, greater efficiency and economy in administration. To take from railroad corporations the natural fruits of efficiency—that is, greater money rewards—must create a sense of injustice suffered which paralyzes effort, invites inefficiency, and produces slipshod management. The public interest, as well as justice, demands, therefore, the due appreciation of greater efficiency in management; and some method must be found of determining the degree of efficiency attained and of providing adequate rewards.

Sliding Scale of Dividends.

Private capital embarked in a quasi-public business ought to receive compensation on a sliding scale, so that the greater the service to the public the greater the profit to those furnishing that service. We should endeavor to approximate results similar to those obtained in Boston by applying the sliding scale system

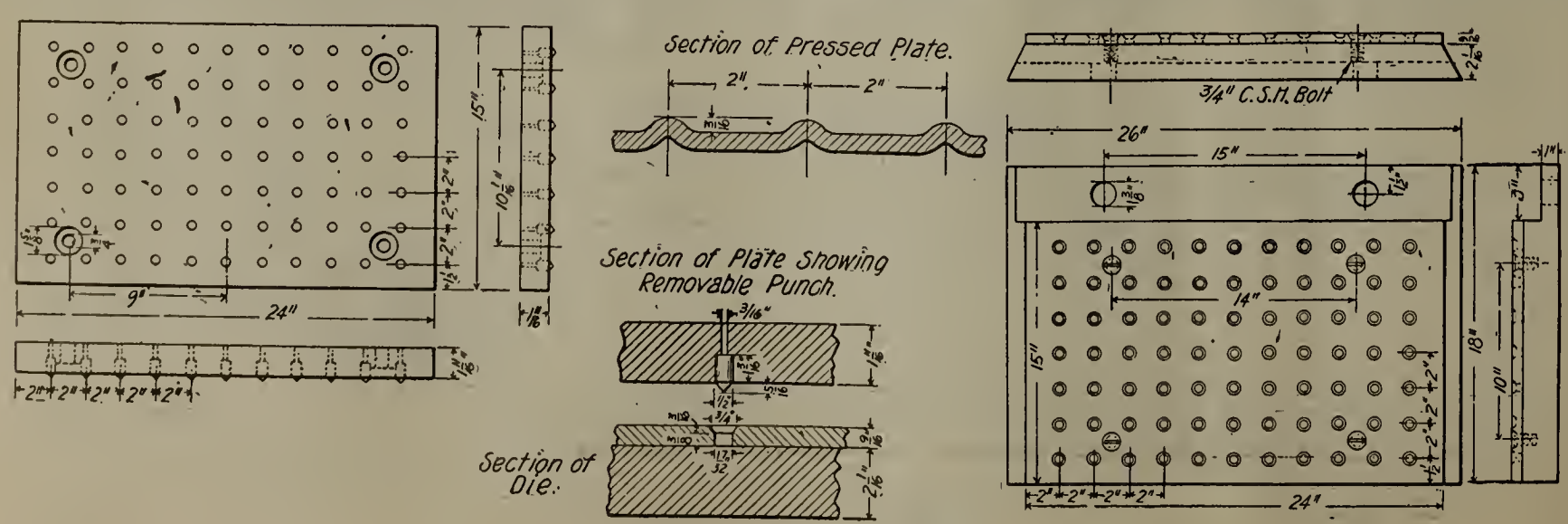

Punch and Die, Central of Georgia Ry.

to the production and sale of gas. There the dividend to the stockholder rises as the selling price to the public is reduced.

The problem presented in the gas business was so simple that it was possible to apply the principle and make it operate automatically. The problem in railroading is infinitely more difficult, owing to the complexities arising from multitudinous rates, varying conditions and degrees of service and interstate relations. But if the principle of the sliding scale is once definitely recognized by the Interstate Commerce Commission, state railroad commissions and the public as properly controlling the relations between the public and railroad corporations, methods will undoubtedly be worked out in time by which it can be safely applied.

How Government Can Aid.

In view of the obligations already assumed by the government in the regulation of railroad rates and service, it should be prepared also to lend its aid to the railroads in advancing efficiency, and in securing to them greater justice by permitting them to enjoy earnings on capital in proportion to the efficiency of their management. To this end a great forward step would be taken if the government should establish a bureau of railroad costs and an experimental station in railroad economies.

The railroads are the greatest single industry in the United States next to agriculture. The interest of the general public to secure efficient and economical transportation is so great that the Government would be fully justified in incurring any reasonable expense to aid in increasing railroad efficiency. The expenditure would be similar to that now incurred by it in aid of more efficient agriculture.

Bureau of Railroad Costs.

The simple ultimate unit costs of each operation in every department of every railroad ought to be ascertained. They should be properly supervised, analyzed, classified and compared, so that each railroad should have the benefit of knowing the lowest unit cost of each operation attained by any American railroad; and how it was attained. This information should be disseminated as the Government now disseminates other useful information, through the various bureaus of the Agricultural Department, the Department of Labor and Commerce and the Department of the Interior. There should also be established an

Experimental Station in Railroad Economies.

Such a station could be conducted similarly to the present experimental stations in the Department of Agriculture which are so potent in raising the standard of agriculture in the United States.

The Government now undertakes, through its bureau of office of Public Roads, under the Department of Agriculture, to advance with excellent results road building throughout the United States. The co-operation of the Government in furthering improvements in railroading would be infinitely more effective. It would undoubtedly edvelop valuable inventions and discoveries in its own laboratories, as the various experimental stations of the Agricultural Department have done. But it would be of even greater service in testing the inventions made and methods suggested by others and bringing to the attention of the railroads those of especial value. There are undoubtedly in existence today hundreds of inventions of greater or less significance—hundreds of new methods which, if adopted, would enhance the efficiency of railroad operation, and introduce economies of wide scope, but which are not known to the operating men because no adequate means exist for bringing them to their notice; which are unused because no single railroad is willing to give the time or incur the expense of testing their value; or because the inventor or discoverer is unable to secure a hearing or trial. There are undoubtedly also a large number of devices and methods in use in foreign countries of which our railway managers have either no knowledge or have but inadequate information. It is a proper function of our Government to make such investigations and to give to the railroads and to the public the full benefit thereof.

Reminiscences of a Master Car Builder—III.

By H. M. Perry.

If one will study the history of railway car equipment for the past fifty years and inspect some of the original cars which are on exhibition in the Field museum at Chicago, he will be surprised to see how many of the old ideas are in actual service today, either in their original shape, or in improvements of the same ideas.

Many of the patented devices in use at the present time are simply improvements of the old ideas, which were tried out several years ago and given up, principally on account of defective mechanical construction due to lack of experience in the service required.

As the business of the roads increased, demanding a greater number of cars in the trains, the cars were increased in size and weight, and as a result the weak points in the equipment began to develop and the inventive genius of the car builder was called on to overcome the difficulty.

The draft gear was one of the first points of failure, and caused the first radical departure in the underframe of the cars when the sills were run the whole length of the car and the draft timbers bolted to the under side of the center sills, a plan which is still followed, but which was radically wrong from the beginning, as the line of draft and compression should have been on the center line of the sills, instead of several inches below that line, causing a tendency to break down the frame at the bolsters.

Improvements are still being made in draft gears, many of the new friction gears being capable of standing a blow of five hundred thousand pounds without damage to the gear, but the question naturally arises: Can a gear of that capacity be attached to a car frame in any manner to stand such blows? And what would be the condition of the car frame after a succession of such shocks?

As all of the old cars had wooden bolsters, both truck and body, the load was carried almost altogether on the side bearings, and one of the first improvements was the introduction of roller side bearings, some of which of the old original design are still in service.

These bearings were made of cast iron with a single roll about 3 ins. in diameter, with a 2-in. face, resting in a cast iron frame, the rolls were provided with trunions, about 2 ins. in diameter, on which they revolved when the car curved, or rather, on which they were intended to revolve, but failed to do so, with the result that a flat place was soon worn on one side of the roll, after which it always remained in the same position and became a rigid bearing, rolls with a chilled face were tried, but they would still wear flat or pound up into the body bearing; then bearings with two rolls were substituted, but met the same fate; then a bearing was made with a flat surface on which the trunions of the roll would travel as the roll revolved, but the roll would get to one end of the bearing and remain there long enough to wear a flat spot and it soon became useless.

A number of the side bearings which have been introduced in the past few years are meeting with the same result, and experience has demonstrated the fact that a successful side bearing must always be in a position to operate at all times,

and which can only be accomplished by some positive centering device.

The next radical departure from the ordinary practice was a side bearing truck. This truck had a wood bolster about 10 by 12 ins. square, secured between the arch bars, which in turn rested on the oil boxes, similar to the present diamond truss trucks, only there was no provision made for springs, the bolster being securely bolted to the arch bars which rested on the top of the oil boxes.

On the upper side of the bolster, an elongated cup-shaped casting was placed, with a corresponding casting on the body bolster. Between these castings a rubber ball about 8 ins. in diameter was placed, carrying the entire weight of the car and furnishing the springs for the same, while the ball rolling between the castings allowed the trucks to curve. The bottom center plate was cast with a large socket in the center, through which the top plate projected, taking the place of the king bolt, but carrying no weight. In case of a wreck we were liable to find these rubber balls anywhere within one hundred yards of the wreck. The capacity of these cars was only about ten tons, and a number of them were in service for several years on some of the eastern roads.

In the past few years patents for side-bearing trucks have been issued, some carrying the body directly on the side bearings, with no weight on the center plate, the same as these old cars, while other designs carry the body on rockers, or hangers, similar to the old suspension truck, of which so much was expected some years ago, a number of which are now running, and from all reports, making a good record.

The next departure, or improvement, was a center bearing truck, doing away with side bearings altogether. This was a pedestal truck with a flat wooden bolster, 5 ins. thick by 12 ins. wide, resting on the side frame of the truck, the springs being in the pedestal over the oil boxes.

On the under side of the bolster, below the center plate, a column casting about 18 ins. long was securely bolted. This casting projected down from the bolster and had pockets near the lower end opening upwards at an angle of about 45 degs.

On the under side of the body bolster corresponding pocket castings were placed in about the same position as the present body side bearings.

Iron bars 2 ins. in diameter, resting in the pockets of the column casting, run diagonally up through the truck bolster, which was mortised out for the purpose, the top ends jetting into the socket castings on the body bolster and forming braces which supported the sides of the car.

The lower ends of these bars were forged square with the ends rounded to fit the pockets in the column casting, and the top ends were forged round to fit the sockets in the body casting, and formed a sort of ball and socket joint, which allowed the truck to curve freely for a short distance.

When the car stood on a straight track it was as rigid as if it rested on side bearings, and on ordinary curves it worked perfectly during the tests, but in service it was a decided failure. A car would run for a few days all right and then come in with one or both bars gone on one end of the car, and as it was not considered particularly safe to scatter 2-in. bars 3 ft. long between the rails while a train was running, the car was ordered off the road and the device removed.

The principle of this device seemed to be all right, but it did not work out in practice. Of course, as the truck curved the distance between the bearings lengthened slightly, but the pockets were made deep enough to overcome this trouble, and theoretically it should have worked, but it failed to do so. The car was only 28 ft. long, so that the travel of the truck on ordinary curves would be very slight.

Within the past few years an application for a patent was filed on identically the same device.

Some of the features of the so-called storm-proof box car doors were in common use over thirty years ago. The door posts were framed to project seven-eighths of an inch beyond the face of the sheathing, the floor in the doorway running out flush with the face of the posts, and the fascia over the doorway being blocked out the same distance. The doors were made with enough to lap over the back door post about 2 ins., and a cleat screwed on to the inside of the door, at the back edge, closed against the projection of the door post, and prevented the rain or cinders from driving in behind the door, the front edge of the door closed against the door stop as usual, and was secured by the ordinary hasp and pin.

On baggage car doors, the projection on the post was on the inside of the car, instead of the outside, a seven-eighths inch strip 2 ins. wide being screwed to the inside face of the door posts, the back edge of one strip and the face edge of the door stop were grooved out and a section of small rubber hose about ½-in. outside diameter was secured in the grooves, projecting about ¼-in. When the door was closed the latch, having a bevelled face, with a cam arrangement, locked it in place, compressing the rubber and making an almost tir-tight joint, which effectually prevented any rain from driving in.

The cast iron threshhold, which formed the bottom guide for the door, was arranged with a groove in the corners to carry off any water running down on the face of the door. The doors were hung at the top with sheaves running on an iron rail, the same as those now in use.

Even the all-steel car is not a new idea. Over thirty years ago the New York Central Railroad had a number of steel box cars in service and run them for a number of years, finally dismantling them after they were about eaten up by rust, a defect to which all steel cars are liable and which has never been overcome.

Many of the comparatively new steel cars, particularly the gondolas, are being so badly eaten up by rust that it is a very grave question as to the economy in their use when compared with the old wooden cars in the cost of maintenance and renewals. And when we take into account the enormous increase in the cost of car repairs, per car, in the past ten years as compared with the previous ten years, particularly on roads with a very large steel car equipment it is a greater problem as to their economy.

It is possible that the steel passenger equipment will be less liable to the destructive action of rust, as the cars are kept better painted and have more attention in service, but time only will demonstrate this fact.

The Kansas City Southern is asking prices on 12 chair cars, 9 baggage cars and 3 combination cars.

The Atlantic Seaboard Despatch has ordered 100 thirty-ton refrigerator cars and one caboose from the Haskell & Barker Car Co.

The New York, Westchester & Boston, it is reported, has ordered 60 steel passenger coaches from the Standard Steel Car Co.

The Buffalo Creek & Gauley, has ordered 100 hopper cars from the Pressed Steel Car Company.

The Havana Central has ordered 100 gondolas from the Pressed Steel Car Co., and 185 flat cars from the Standard Steel Car Co. This company is reported in the market for 500 additional freight cars.

The Proctor & Gamble Co., it is said is in the market for 100 cars.

The Chicago, Memphis & Gulf, is reported to have ordered 50 flat and 50 box cars from the Central Locomotive & Car Works.

HEAVY PASSENGER LOCOMOTIVE BUILT AT WYOMING SHOPS, PERE MARQUETTE R. R.

The illustrations herewith show an Atlantic type locomotive recently built at the Wyoming shops of the Pere Marquette R. R., at Grand Rapids, Mich. This engine was built to replace one of the same type which was destroyed by the explosion of its boiler, and is of practically the same dimensions.

S. A. Chamberlin, M. M., Pere Marquette R. R.

Mr. S. A. Chamberlin, master mechanic, under whose direction the locomotive was built, is justly proud of his success, as this is the first locomotive which has been completely built at these shops. The principal dimensions are as follows:

Type, 4-4-2	Class A-4
Weight engine truck	32,000 lbs.
Weight, drivers	90,000 lbs.

Atlantic Type Locomotive Built at Wyoming Shops, Pere Marquette R. R.

Weight, trailer	28,000 lbs.
Weight, tender	113,250 lbs.
Weight, total	263,250 lbs.
Tank capacity	5,000 gals.
Tank capacity	12 tons
Headlight	Pyle Electric
Cylinder	18½x26
Boiler pressure	210 lbs.
Flues	248
Flues, diameter	2 ins.
Flues, length	14 ft. 6 ins.
Firebox length	90 ins.
Firebox, width	68 ins.
Boiler, diameter, shell	58¼ ins.
Engine truck wheels	30 ins. rolled steel
Engine truck journals	5½x10 ins.
Driving wheel center, Davis counter balance	66 ins.
Driving wheel journals	8½x11 ins.
Wheel center, trailer	44 ins.
Journal, trailer	8x14 ins.
Tender truck wheels	Rolled steel, 33 ins.
Brakes, Westinghouse	E. T. equipment
Injectors,	Chicago M. 10½—Hot water, non-lifting

VALUE OF PRACTICAL INSTRUCTION ON FUEL ECONOMY.*

V. C. Randolph.

The plotted chart shows graphically the saving in fuel and a corresponding money value, covering a division which has an assignment of eighty locomotives, practically all of a modern type.

It will be noted that the vertical scale represents pounds of coal and the horizontal scale months of the year. The vertical difference between any two points on the same vertical line reads directly the loss or saving for that month as compared to the same month of the previous year. The saving or loss is represented in pounds per locomotive mile if for passenger work, or switching service; and pounds per 1,000 ton miles for freight service. The curves showing the consumption either on the locomotive mile basis or 1,000 ton mile basis for the year 1910 are extended into January, February and March of 1911, so that if, for instance, you read the pounds used in January a comparison can be drawn by projecting this point over on the vertical line showing pounds used in January of 1910 and the difference will be the saving directly. Tables which follow show this saving or loss in pounds, reduced to dollars, for each month separately, and the difference between the total losses and total saving brought down as the total net saving for the year.

Beginning in the middle of a hard winter when traffic is congested with the consequence of long hours on the road with several new engineers and firemen and other adverse conditions that have an influence toward increasing the consumption and which are familiar to all, it could hardly be expected that very much of a showing in fuel economy could be effected from the start. Also, it required a little time to

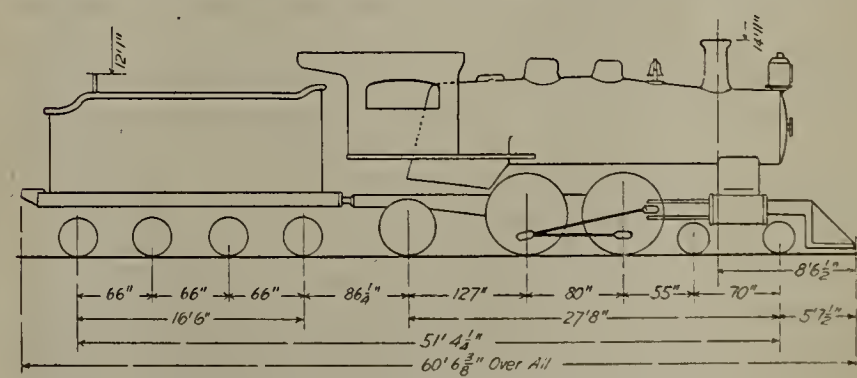

Locomotive No. 396, Pere Marquette R. R.

grasp the situation and become familiar with the proposition; however, in the meantime many valuable object lessons will present themselves.

To first attract attention to the importance of economy in the use of fuel and reach as many at a time as possible, instruction classes were held weekly for several months, where engineers, firemen, hostlers, engine preparers, fire cleaners, and, in fact, all having to do with the use of fuel, were thoroughly instructed in its use, after which the meetings were held periodically or often enough to help keep all concerned interested. As a drawing card, other subjects pertaining to locomotive operation, air brakes, etc., were occasionally taken up and discussed, a large blackboard being used for the purpose of illustrating the importance of saving every pound of coal possible.

*From a report to the Traveling Engineers Association, Chicago, Aug. 29 to Sept. 1, 1911.

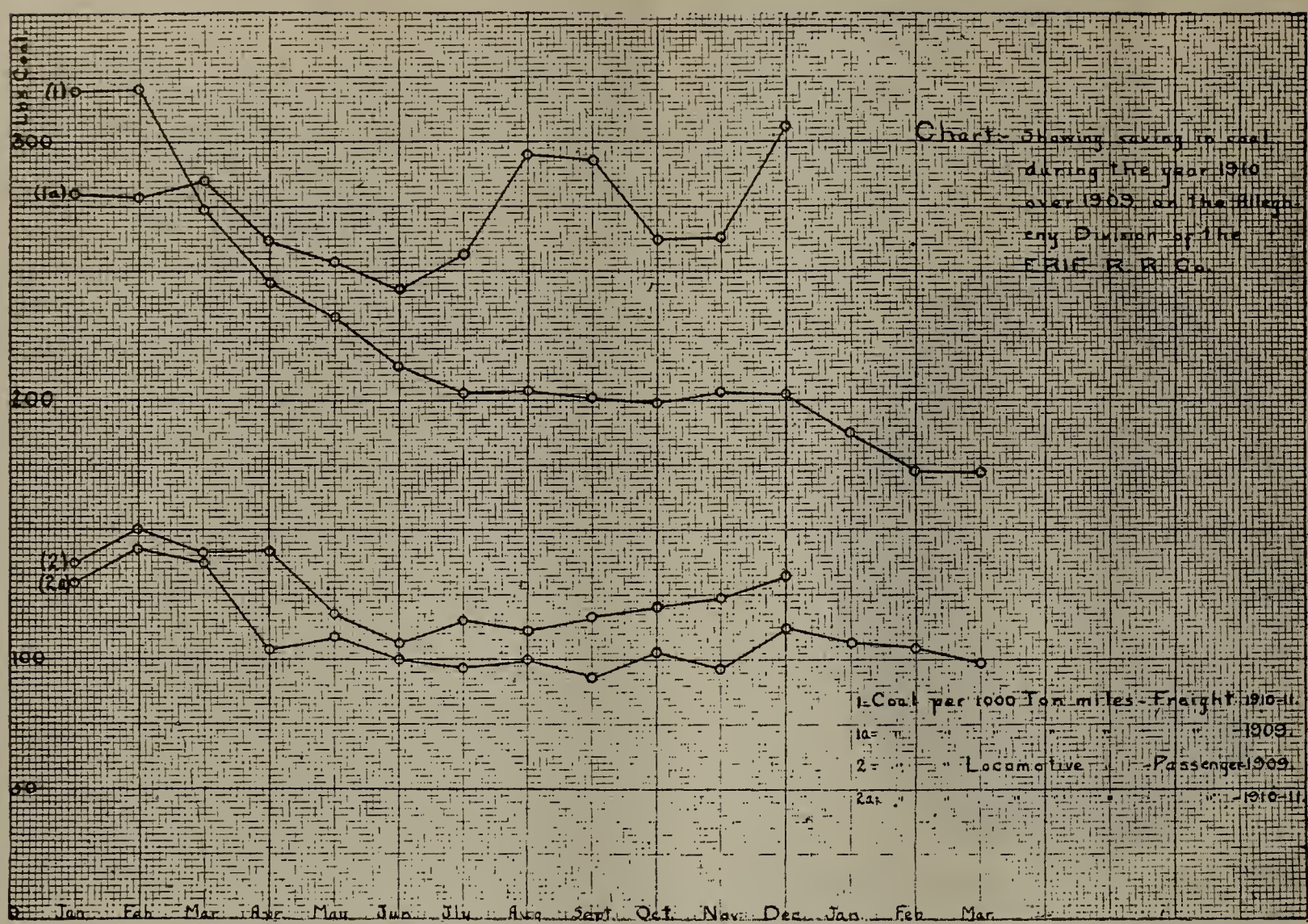

While a shovelful appears to be a comparatively small item, in itself, it will be seen from the following how fast it runs into money if that shovelful could be saved for each locomotive mile made. For instance, the Allegheny Division mileage for the month of March, 1910, was 173,135. This multiplied by 15 (the number of pounds of coal in a shovelful) equals 2,597,025 pounds or 1,298 tons. This multiplied by $1.24 (the cost per ton) equals $1,609.52, saving for the month, or $19,314.24 per year. The same example applied to the system, where for the same month the mileage was 2,961,671, would amount to 44,425,065 pounds or 22,212 tons per month or $27,542.88. The saving at this rate for a year amounts to the sum of $330,514.56.

When the results of small savings are illustrated and explained in this manner nearly all will agree that it can easily be accomplished; in fact, a large number of men have said, "Why, instead of saving by the shovelful, we can save by the ton," and will refer to instances to prove it. With the figures before them, it pays to dwell on the magnitude of the proposition until all are convinced that it can be carried out in actual practice, and that while fuel economy might be an interesting subject to talk about, it would be of no consequence unless all concerned were as economical as possible in its use.

After showing the importance of each saving the next thing is to prove how it can be accomplished. Take for one instance the loss occurring through the pop valves alone, and explain that there are 60 minutes in an hour and 24 hours or 1,440 minutes in a day, 365 days or 525,600 minutes in a year. It is conceded by all conversant with the facts that about 15 pounds of coal is necessary to keep an ordinary pop valve open one minute. If one engine was popping continuously it would take 15 pounds of coal per minute; this factor multiplied by the number of minutes in a year would equal 7,884,000 pounds or 3,942 tons of coal, which at $1.50 per ton amounts to $5,913. While it would be absurd to think that such a performance could be credited to any one locomotive, when it is considered that some railroads operate several hundred, the saving is apparent.

For instance, this Company has about 1,500, and assuming that two per cent. or thirty of them were blowing off all the time, which is considered a conservative estimate, the loss from this source amounts to $177,390 annually.

Other wasteful practices are: Overloading of tenders, allowing coal to work out and rattle off, shaking good fire into the ash-pan, firing too heavily and bringing engines into terminals with heavy and very dirty fires. However, these losses are small, compared with what the engineer may waste by leaving the reverse lever in the corner too long in starting, and not working steam as expansively as possible when running, also by not taking advantage of supplying water to the boiler at the proper time, running too fast between stations, especially on local trains, and then waiting for time, also working steam longer than necessary and then checking speed with the brakes.

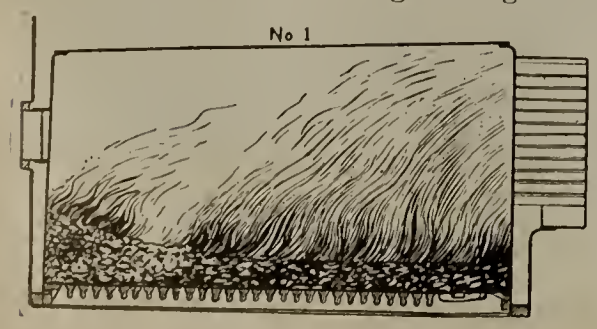

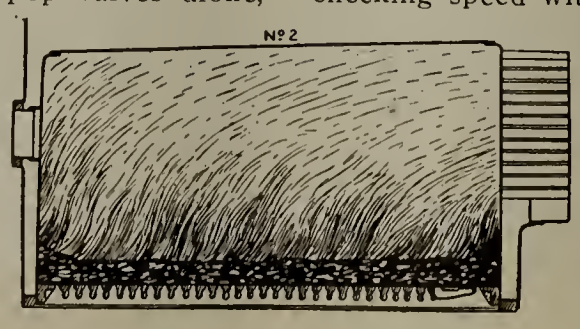

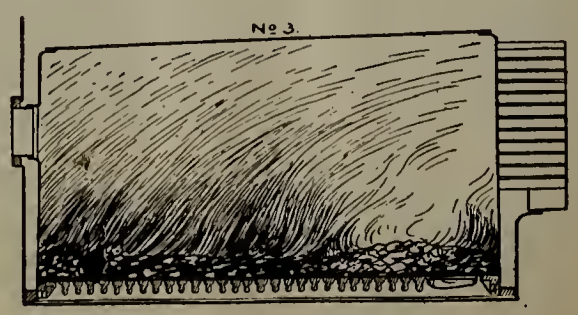

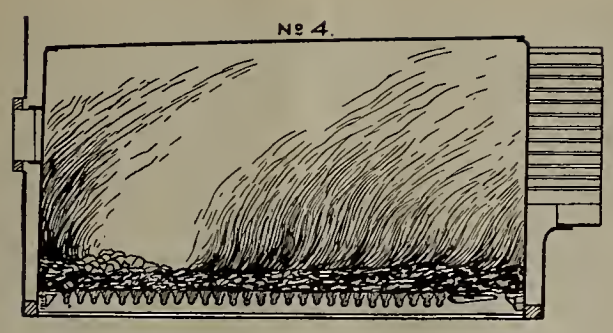

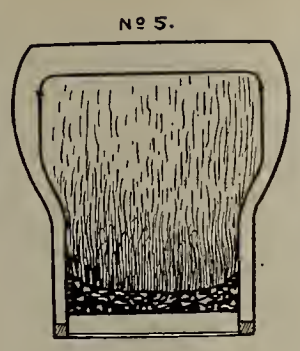

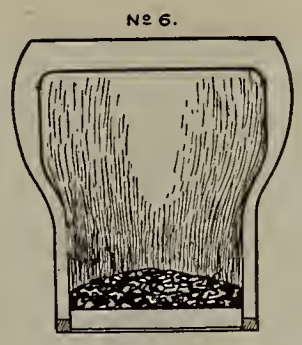

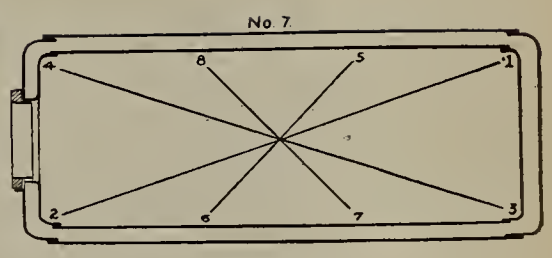

At this time we will show the chart of standing instructions, covering light and level cross firing.

Fig. 1 shows the system of heavy firing at the door, resulting in a light fire over only a portion of the grate surface, as plainly shown by the path of the flame. This method of firing shuts off the proper supply of air to the back portion of the fire, with a consequent reduction in fire-box temperature, and forces the forward portion of the gate surface to perform the work that was intended to be distributed over the whole grate area.

Fig. 2 shows a system of light and level cross firing with slight building up around the edges, producing a bright fire with high temperature throughout the whole fire-box. In our opinion it pays to dwell considerably on these two views, as one shows practically a perfect condition, while the other shows the reverse. It has been our experience that a good many firemen do not get the benefit of the entire grate area due to the condition illustrated in Fig. 2.

Fig. 3 shows good firing and the effect of a temporary reduction in fire-box temperature when a shovelful of coal is introduced. This, also, should be very instructive, as we are able to show firemen by this view what the effect is of putting a lot of coal into the fire-box at one time. The figure shows the effect of a shovelful of coal put in the front end of the fire-box.

Fg. 4 shows the temeperature in the front end of the fire-box restored at the time a shovelful is put into the back end as would be done with this system of cross firing, and a consequent reduction of temperature when the coal is put into the back end of the fire-box.

Fig 5 shows an end view of the fire-box with a slight building up of the fire on the sides, as would be the result of this system of firing.

Fig 6 shows an end view of the action of the draft in thinning the fire along the sheets of the fire-box unless the coal is introduced as per Fig. 5.

Fig. 7 shows the method known as cross firing indicated by successive numbers on the arrows. In this system a shovelful is spread near one of the front corners, the next is put in the back and opposite side, thus alternating the places where each shovelful is put between the corners and the middle of the grates first on one side and then at the other. This method tends to keep the fire nearly level, except a little heavier next to the sheets to prevent too much air entering at these points, as the air will not be heated to the igniting point until it gets near the middle of the fire-box on account of the temperature near the sheets being held down by the amount absorbed by the water on the opposite side of the sheets. Also, we believe it is good practice to fire on one side or end, then at the other, in order that the bright fire in one place may help to burn the gases liberated from coal introduced at the other.

Fig. 8 shows the cooling effect from a hole being allowed to get in the fire, admitting a large volume of cold air into the fire-box. In introducing this system we desire to say, that with the aid of a large blue-print furnished, we believe it is one of the greatest aids which can be used in instructing both engineers and firemen in the proper method of handling the fire. We have also found it very convenient and instructive to draw on the blackboard views of the boiler and fire-box, and explain how the draft is created and equalized evenly over the fire, the effect of steam or air leaks into the front end, and why, if a lighter fire was often carried, it would be possible to run with a larger exhaust nozzle, thereby reducing back pressure on the pistons and doing the same work with less fuel.

It is also a good idea to explain the approximate amount of air necessary for the proper burning of the coal and the necessary temperature maintained for good combustion, the difference in the number of heat units generated when the temperature is what it should be, and what it often is, with an insufficient amount of air present, etc. While it may not be essential for a man to know all about the science of combustion to make a good fireman, we believe the more one does know about his business (no matter what it is) the better and the quicker he can get satisfactory results.

After explaining that three things are always necessary for combustion, i. e. the fuel or substance to be burned, the oxygen with which to burn it, and the igniting temperature, some simple illustration should be made to prove it. In the basence of something better a common match may be used, explaining that different substances burn at different temperatures, but that it is always the same for the same substance. For example, phosphorus combines with oxygen at a temperature of only 150 degrees Fahr., which is generated by friction when the match is struck on any rough surface; its burning brings the temperature up to 500 degrees Fahr., at which the sulphur burns, with the result of raising the temperature of the wood next to the burning sulphur up to its igniting point, which is 1,000 degrees Fahr., when it also burns. However, not all at once, but only as the required temperature is reached.

To burn coal successfully, the fire-box temperature must be maintained above 1,800 degrees Fahr. This explanation and some little object lesson to prove that air is necessary for combustion, should convince all of the necessity of feeding the fire lightly and often, with the required amount of air entering the fire-box. The fireman should be taught that heavy firing is wasteful and should always be avoided, that when large quantities of coal are thrown on the fire, it absorbs large quantities of heat and reduces the temperature of the fire-box below the igniting point of the volatile gases, allowing them to pass out of the stack unconsumed in the form of black smoke. Then, again, the greater volume of gases the more difficult it is to properly mix them with

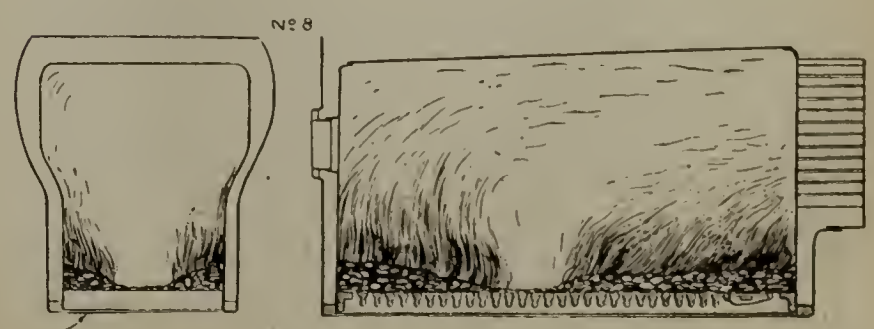

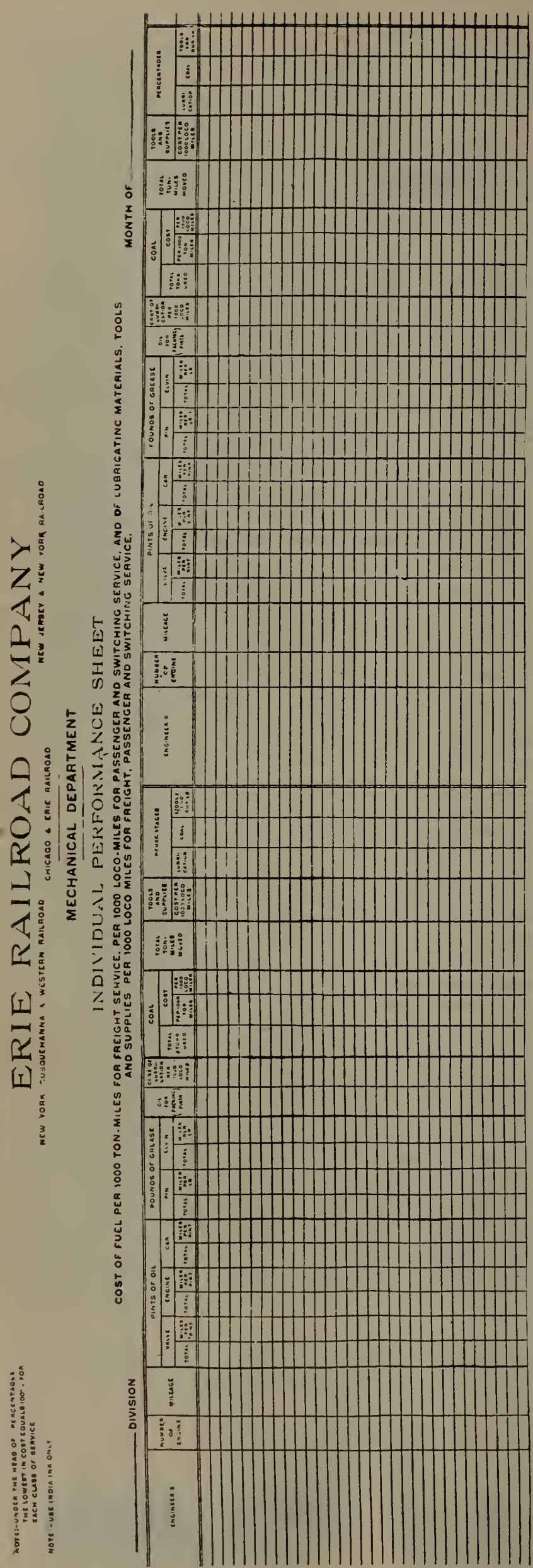

Individual Performance Sheet.

the air and consequently the harder it is to effect complete combustion and prevent smoke. The quantity of coal to be fired at a time depends on its quality, the size of the engine and the amount of work performed. When firing, the fire-box door should be closed after each shovelful, and the coal scattered over as much of the fire where needed as possible.

By having the coal broken into small pieces of uniform size it presents a greater burning surface and causes quicker ignition than when large lumps are thrown into the fire-box; it also allows the air to enter the fire in small streams and furnish the necessary amount of oxygen to create a higher and more uniform temperature. When the fire-box door is kept open too long, the air, instead of coming through the fire and supplying the necessary amount of oxygen, will go through the open door and the fire does not get a sufficient amount at the time most needed. Now, when several shovelfuls of coal are thrown onto the fire at this time the temperature is reduced below the burning point of the best part of the coal which passes through the stack, whereas if the proper method was followed much less coal would have been burned, considerably more steam made, and black smoke greatly eliminated. With coal handled as first described, more of the ash and refuse will be consumed or thrown out the stack instead of being mixed with unburned coal and raked together, forming clinkers, with the result that the engine lags for steam on account of dirty fire. While the ash-pan, instead of the fire-box, is the place for ashes, care should be exercised not to shake unburned carbon out of the fire. The avoid smoke when preparing the fire or when throttle is first closed, by partly opening the fire-box door and putting on the blower the smoke will mostly be concumed; as it is, gradually ease off the blower and close the door.

The engineer should be taught to treat the fire as lightly as possible in starting and afterwards to work steam as expansively as possible consistent with the running time. As the proper handling of the injector is one of the most important points in fuel economy, he should take advantage of the most favorable times to supply water to the boiler and consider the modern one as a storage plant, and instead of allowing pops to blow, utilize the space to store energy as long as dry steam can be used even though the water level is above its customary height.

In starting, the supply should always be shut off until the train is brought to a fair speed at least and the fire nicely burning, after which, if on a through train, the supply should about equal the demand, i. e., keep water uniformly level; if a local train, a little water should be lost between stations and regained while drifting into, standing or switching at stations. By supplying a little less water than is being used between stations, it requires less coal when using steam and leaves space in the boiler so the injector can be worked to avoid pops opening when throttle is closed.

The cleaning and keeping of fires at terminals is a very important question. A vast saving in coal can be effected in cleaning fires by leaving them in proper condition and plenty of water in the boiler when engines arrive on the ash-pit. This requires the co-operation of the engine crews and hostlers. The fire should be burned comparatively low, especially at the back end of the fire-box, as about the first thing the fire cleaner does is to drop the back dump grate. As a protection to the flues the fireman or hostler should before leaving the engine on the arriving track, throw a few shovelfuls of coal into the forward end of the fire-box. In cleaning the fire, any unburned coal or live fire in the back end should be pushed ahead, the back section of grates shaken, then the dump grate dropped, and any clinkers broken up and disposed of. The forward section of grates should then be shaken and any clinkers pulled back and forced through the dump. After this operation the grates should be leveled and the dump grate closed. If the en-

gine is to lay over for several hours, the fire should be pushed ahead, leaving the dump and one or two grates bare, then covered over as condition of the fire warrants, in all cases sufficiently to prevent the pops opening. When the engine is ordered, the fire should not be broken up until shortly before leaving time, unless necessary on account of poor fire. The excessive use of the blower should be guarded against at all times and especially when cleaning the fire. The roundhouse foreman and staff should understand the importance of keeping the draft appliances, grates and flues in proper condition.

The condition of the locomotives is the governing factor in effecting fuel economy and it would be poor policy to neglect repairs that would cost a few dollars and by so doing consume perhaps a hundred dollars' worth of coal per month or even more. The location of the steam gauge should be as close firing requires close observation of the pressure. If a swing door, the latch should hold it positively open given more attention, particularly on the large locomotives, when putting in coal; when practical, a small chain should be provided, hung from some convenient point and only slack enough to allow it to drop into place. The deck sheet should be closely fitted, leaving no holes for coal to drop through. By looking after these apparently small points it helps to get and keep the co-operation of the engineer and fireman, which is a very important part, and the writer believes this can be done by working together, each recognizing his dependence upon the other, and in this way a greater reduction in fuel made than by any device which can be applied to a locomotive.

The benefits derived by educating firemen in the art of handling fuel and the savings effected thereby has resulted in issuing of a book called "Good Firing," which is given to each fireman when entering the service, also a book of elementary questions is furnished at the same time. At the expiration of his first year's service he is required to pass a written examination, which is verified by an oral one conducted by the road foreman of engines or other person appointed by the proper authority, necessary knowledge being obtained from the book furnished, attendance at instruction classes held by the road foreman or supervisor of locomotive operation, also from information received and instructions given him by either, when on his engine or otherwise.

At the end of the first year and after passing the examination, the first year's question book is returned and the list of questions on the second series is given him. At the expiration of the second year, another examination follows, which is progressive in form, it being a little harder to obtain the answers. However, in properly answering the questions it proves that he has made a study of his work. The third year's series consists of his final mechanical examination, which, if satisfactorily passed, qualifies him as a locomotive engineer.

Explanation of the Individual Performance Sheet.

To create interest in a competitive way among all engineers, an individual performance sheet is issued monthly on each division, which shows the name of each engineer, the number of his engine (when regularly assigned), the engine mileage made by each engineer, the amount of lubricating material used and cost of same per 1,000 locomotive miles, also the miles made per pint of oil. It also shows the number tons of coal used and cost per 1,000 ton miles in freight service, and the number tons of coal used and cost of same per 1,000 locomotive miles in freight, switching and passenger service, respectively. In freight service the total ton miles moved are also shown. The cost of tools and other supplies is shown on the 1,000 locomotive mile basis for all classes of service. The percentage column relates entirely to each of the three sub-divisions, the percentage being based on the lowest performance, i. e., the lowest in cost will be classed as 100 per cent., all others being of a corresponding ratio.

While costing considerable time and money to prepare a report of this kind, it has proved itself to be a good investment to the company, for as a rule each engineer and fireman takes pride in trying to reach the 100 per cent mark.

The idea of fuel economy, like every other new idea which later proved to be of any account, was first looked upon skeptically by the majority of men, but, like other past experiences, some of the most disinterested and indifferent proved to be our greatest enthusiasts.

Before closing, the writer wishes to say he is unable to understand why the item of fuel, which costs the most money of any single item of expense to a railroad, except that of wages, has not received more attention in the past, especially when we stop at this time to realize the opportunities for economy, as compared to what the savings amount to in lubricating material, the latter being restricted to pints or pounds which is figured in cents, while the former, which amounts to dollars, has been handled as though it had practically no value.

In conclusion would say that the savings referred to were not brought about by any small degree of labor on the part of the writer, but on the contrary it meant practically constant supervision either day or night or at any time in order to reach the men when in service and follow up the instructions given in classes by practical demonstrations on the road when the fuel was being used. The resulting savings which were effected due to these means are what the writer has endeavored to bring to your attention.

MALLET SUPERHEATER LOCOMOTIVE, DELAWARE & HUDSON CO.

In June of last year the Delaware & Hudson Co. received six Mallet locomotives from the American Locomotive Co., which at the time of their construction were the most powerful engines in the world. They were put in pusher service on the 18-mile grade of the Pennsylvania division between Carbondale and Arrarat Station, where they have been in operation ever since. From W. C. tower, Carbondale to Forest City, a distance of 5½ miles, the grade is 1.36 per cent and from the latter point to Summit, it averages about .8 per cent, with a number of 6-degree and 7-degree curves.

Recently the Delaware & Hudson has received from the same builders four more articulated locomotives, practically duplicate in design of the first lot except that they are equipped with the Schmidt loop type fire tube superheater. One of these later engines is shown in the accompanying illustration.

Outside of the modifications in the construction of the boiler, but very little change from the original design was necessitated by the application of the superheater.

In the non-superheater design the high phessure steam pipes are connected to the branch pipes in the smoke box and extended back underneath the runing boards to the high pressure cylinder; consequently, no change in this particular was necessary on account of the application of the superheater. Extended piston rods are applied to all pistons and the rods of the high pressure valves are also extended in the superheater design.

There is also a difference in the valve setting between two classes of engines. The valve in both cases has a travel of 6 inches. In the superheater engines the high pressure valve has a 1 inch steam lap, a 3/16 inch lead, and 5/16 inch exhaust clearance. The low pressure valve has the same lap and lead and a ⅜ inch exhaust clearance. In the case of the non-superheater engines the high pressure valve has a 1 1/16 inch lap, a 3/16 inch lead and a 5/16 inch exhaust clearance, while the low pressure valve has a 1 inch steam lap, a 5/16 inch lead and a 7/16 inch exhaust clearance.

The boiler of the engines here illustrated is fitted with 270 tubes, 2¼ inches in diameter, 24 feet long and 42 flues 5½ inches in diameter.

Shortly after the first lot of engines went into service, tests were made to determine their fuel and water consumption as compared with the Delaware & Hudson class E.5 consolidation locomotives whose place they took in pusher service. These later engines have a total weight of 253,000 pounds, 223,000 pounds on driving wheels and a tractive power of 49,700 pounds. Observations were taken of several runs made by the same two class E.5 locomotives working together as pushers and also of locomotive Nos. 1600 and 1605 of the articulated type, working separately.

In order to obtain the fairest basis for comparison, only the results of those runs in which conditions were most nearly alike were tabulated, 4 in each case. The general averages showed that the articulated locomotive hauled within 2.7 tons—as much as two consolidation locomotives together at approximately the same speed, and burned 44 per cent less coal.

From records of the fuel consumption of the articulated locomotives covering the time since they have been in service, Mr. Manning, superintendent of motive power, states that they have maintained the averages shown in the tests made. Similar tests will be made of the superheater locomotives which will permit of interesting comparisons with the locomotives using saturated steam.

saving in coal would be 933 pounds or 4.89 per cent of the total coal burned.

An excellent system of operating and handling the Mallet locomotive has been adopted by Mr. Manning, which is unique and will be of interest to all mechanical officials who have to do with this type of locomotive. In the matter of roundhouse, the Mallet engines are segragated from the general work. A building was erected at the end of the roundhouse and a number of tools for handling the roundhouse work were installed. Night and day mechanics were selected to work on the Mallet locomotives. Their whole time is not put in on the Mallet engines but the understanding and organization is such that when there is work to do on those engines they are the men who look after it.

When overhauling is necessary, the articulated locomotives are, of course, taken over to the shop which is about 100 yards from the roundhouse. At the shop a drop table has been installed that permits of dropping four pairs of drivers at one time. With this device all the wheels of the articulated locomotives can be removed in 20 minutes after they are ready to be taken down.

As far as the operation is concerned, a maximum speed limit of 15 miles an hour both working under load and coming down the grade light has been fixed.

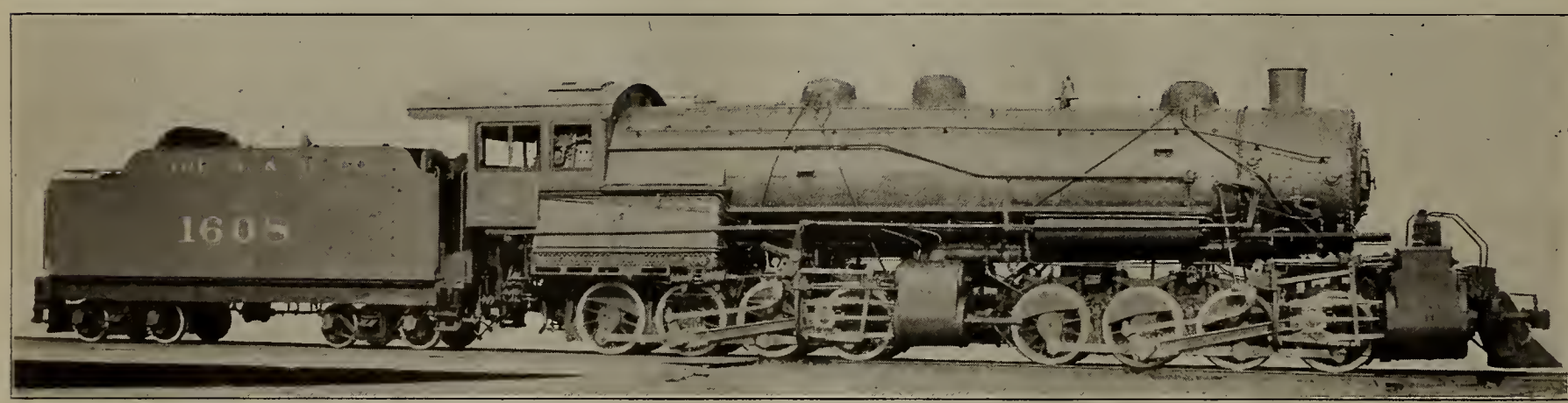

New American Mallet for the Delaware & Hudson Co.

We hope to be able to publish results of these tests in a future issue.

An analysis of these figures and a consideration of the causes which produce the economy shown, bring out some very interesting points in regard to the saving effected by the use of a single unit of great power instead of two or more units of less power in handling a given amount of tonnage. For instance, the total weight in working order of the articulated locomotive and tender is 194,200 pounds or approximately 97 tons less than the aggregate of the two consolidation locomotives with their tenders. The length of the division is 18.7 miles, which gives, in round numbers, 1,800 ton-miles less for the articulated locomotive per trip as compared with the two consolidation engines. The consolidation locomotives burned on the average .68 pounds coal per ton-mile; consequently, the above saving in ton-miles means a resulting reduction of 1,225 pounds of coal per trip or 6.4 of the average total amount of coal burned (19,074 pounds). On the other hand, both classes of locomotives have approximately 100 sq. ft. of grate area; consequently, with the single unit there is 100 sq. ft. less of grate area to consume coal when the train is standing on a siding. It will be readily appreciated that considerable economy of fuel results from this cause. The tests showed that the consolidation locomotives burned an average of 55.8 pounds of coal per sq. ft. of grate area per hour. Assuming that standing on a siding the rate of combustion is half of this amount or 28 pounds, and that in the 18 miles there is an average lost time of 20 minutes, which is a very conservative figure, the

All the articulated locomotives are equipped with speed recorders and the rule in regard to speed limit is rigidly enforced. Any engineer exceeding the speed limit is disciplined and as a result, the rule is universally observed. The locomotives are run forward up the hill for thirty days and then turned and run backward for an equal length of time, thus equalizing the flange wear on the tires of the front and back systems. There can be no doubt that this careful system of operation contributes largely to the successful service which these locomotives are performing.

Following is a table of specifications:

Loaded Weights.	
On driving wheels	457,000 lbs.
Total of engine	457,000 lbs.
Tender	168,800 lbs.
Wheel Base.	
Rigid	14 ft. 9 in.
Driving	40 ft. 2 in.
Total of engine	40 ft. 2 in.
Total of engine and tender	75 ft. 7¼ in.
Cylinders.	
Diameter	H. P. 26 in., B. P. 41 in.
Stroke of piston	28 in.
Wheels.	
Driving wheels, diameter outside	51 in.
Tender wheels, diameter	33 in.
Journals—Diameter and Length.	
Driving	10 x 12 in.
Tender	10 x 12 in.

Boiler.

Type	Conical connection
Working pressure per sq. in	220 lbs.
Outside diameter at front end	90 in.
Length of firebox inside	126 in.
Width of firebox	114 in.
Tubes, number	270 2¼ in.; 42 5½ in.
Tubes, diameter	2¼ in. and 5½ in.
Tubes, length	24 ft.
Evaporative heating surface tubes	5,245 sq. ft.
Evaporative heating surface firebox	353 sq. ft.
Evaporative heating surface, total	5,598 sq. ft.

Superheater Heating Surface.

Grate area	100 sq. ft.
Kind of fuel	Bituminous

Tender.

Type of tank	Water bottom
Tender frame	Steel channels
Water capacity	9,000 gals.
Fuel capacity	14 tons
Maximum tractive power (working compound)	105,000 lbs.

FACTS ABOUT ASBESTOS.

The United States Geological Survey has published an advance chapter from "Contributions to Economic Geology, 1910," on the important asbestos deposits in the United States, by J. S. Diller. According to Mr. Diller, asbestos is one of the most important minerals to human welfare. The discovery of a mineral fiber in asbestos, which is ordinarily indestructible, belongs to a comparatively late period of civilization, although asbestos was used in the ancient pyre to preserve the royal ashes. Charlemagne is said to have had a table cloth made of asbestos and used to clean it by throwing it into the fire to consume the dirt, thus illustrating in a spectacular manner one of the most important properties of this mineral.

Most Useful Fireproofing.

The best grade of asbestos is beautiful silky fiber with a high degree of flexibility, elasticity and tensile strength. It can be spun into thread so fine as to run 225 yards to the ounce, and as it is incombustible as well as a non-conductor of heat and electricity and resistant to the action of most ordinary acids, its field of application is large. The possibilities of the usefulness of asbestos are far from being fully appreciated, not only by the general public, but by manufacturers in search of material for special purposes to which asbestos may well be applied.

Perhaps the most general use is to make fireproof cloth for theater curtains. In Germany it is used for firemen's clothing. Everywhere in cold countries it is extensively employed for furnace, boiler and pipe covering to prevent the loss of heat. Asbestos is a good insulator and whether steam or electricity is used for power, asbestos is one of the most important elements in the harness.

Asbestos of Commerce.

The asbestos of commerce includes fibrous minerals of several species, but may be included under amphibole and serpentine. Fibrous amphibole is properly called asbestos, fibrous serpentine is chrysotile, and the especially fine, silky form of both amphibole and serpentine is known as amianthus, but in the trade all are included under the general term asbestos.

Like auriferous quartz and the ores of other precious metals, asbestos generally forms veins, but in some places where it is of low grade it makes up the whole mass of the country rock.

There are three types of asbestos—cross fiber, slip fiber and mass fiber—distinguished by the form of aggregation.

The most valuable asbestos fiber occurs in cross fiber veins. The fiber runs directly across the vein from side to side. Its length is thus limited by the width of the vein and ranges from one-sixteenth of an inch to two inches. For the most part the veins of asbestos separate easily from the country rock and when broken across expose the beautiful white fluffy asbestos fiber with the sheen of silk. The highest grade of asbestos, about an inch in length, is common in the eastern provinces of Canada, but has not yet been produced in the United States. It is worth about $275 a ton. The lower grades, ranging from $100 down to less than $10 a ton, are much the more abundant in all asbestos fields.

Slip fiber occurs along slipping planes or faults and shows the direction of the motion. Most of the slip fiber asbestos is of low grade.

Source of Asbestos.

All asbestos is of secondary origin, and it may be derived by alteration from a variety of rocks generally rich in olivine or pyroxene. Some of it, however, is derived from impure limestone. Rocks originally rich in olivine are by far the most important source. They alter to serpentine and under favorable conditions give rise to asbestos. The purer the serpentine the more likely it is to contain asbestos, especially if the serpentine has been greatly fractured and intruded by granitic dikes, as in the vicinity of Thetford, Canada. Rocks and conditions similar to those of the asbestos region of Canada, but much less rich in asbestos, occur near Lowell, Vt., and Casper, Wyo., where prospecting and mining operations are now being carried on.

Asbestos in the Grand Canyon.

A small amount of high grade cross fiber asbestos has been taken out near the bottom of the Grand Canyon of the Colorado, and there are large masses of low grade asbestos in Georgia and Idaho, which have been operated to a greater or less extent. With the immense supply of high grade asbestos at our Canadian door, as well as an increasing production in the United States—already about 4 per cent of the Canadian output—the asbestos industry of this country is in good condition.

Mr. Diller's report on asbestos is published in Bulletin 470-K, which may be obtained without cost from the Director of the U. S. Geological Survey, Washington, D. C.

ALTERNATING CURRENT IN ELECTRIC RAILWAY SERVICE.

By F. H. Dimock.

There has been of late so much partisan advocacy of differing electrical systems that many practical railroad men, and electrical men also, might well become confused and wearied by the contentions. In advertising the fact that it furnishes railway equipment of all kinds, a great electric company (The Westinghouse Electric & Manufacturing Company, East Pittsburg, Pa.) recently published a concise and interesting summary of the charactertistics of the three great systems of railroad electrification. Each system has charactertistic features of advantage for particular conditions. We may quote from this summary:

The direct current system was the first in the field and has advantages in the operating characteristics of the motor; simplicity and ruggedness with high power, variable speed and ease of control. The limitations of the system are found in comparatively high cost and low efficiency of the transmitting and distributing system in conversion losses, especially in systems designed for moving heavy trains over long distances.

The single-phase system gives operative qualities similar to that of direct current, with somewhat greater flexibility as to power and speed. The first cost of the transmitting and distributing installation is comparatively low and great economy for hauling heavy trains over long distances is secured. The motors are similar to direct current motors and may be operated on direct current if necessary; but this requires additional, heavy and complicated control. The first cost and weight of single-phase rolling stock equip-

Alternating Current in Railway Service, Spokane & Inland.

ment is somewhat higher than that of direct current apparatus. The limitations of single-phase operation have not yet been determined.

The practically constant speed operation of the three-phase motor is against its use on main line railways where valuable speeds are used. The overhead trolley wires increase the cost of installation and cause complications.

In choice between the three systems in America, local conditions should be considered. These summarys present the situation very fairly and should emphasize the fact that the most advanced electrical manufacturers urge no particular system other than the one that is, in each instance, most economical. Economy of installation and operation together with provision for future development, should be the determining factor in selection of railway apparatus.

Generation and transmission of power for railway service in the form of three-phase alternating current is too thoroughly established to need discussion here; but the inevitable growth of central power plants and the certainty of arrival of the time when great central stations will supply power for trunk or main line railroads and interurban and local lines, together with current for industrial and lighting purposes, must be now considered by every one interested in railway electrification.

This condition is now especially acknowledged in France, where certain tramway companies are now suffering from inadequate electrical equipment and cheap construction. Owing to high maintenance charges and the reduction in the cost of power from large central station, several railroad systems have found it economical to shut down their generating stations and purchase current from central station plants.

Purchase of power for railway operation is a present practice in several localities in the United States today, but it is only in its infancy. Its inevitable advent will largely eliminate individual power plants for local railroads, with their poor load factors and consequently costly operation, and greatly simplify and stimulate new railroad lines or extensions. Under the well established principles of generation the problem of selection of equipment becomes one of economy of transmission, distribution and operation, considered as a whole.

Alternating Current in Railway Service, Rock Island Southern.

Three-phase railway operation may be considered as suited for certain conditions in main or trunk line heavy service only where constant speed is economically desirable; and for the purpose of this article, the scope of alternating current in railway service will be considered as applying to single-phase operation for both passenger and freight service on interurban lines, local systems serving a comparatively wide territory and main lines.

Single-phase alternating current operation has greatly extended the profitable field of electric motive power. It is especially adapted to handling passenger and freight trains (heavy or light) over long distances and to interurban service with either single cars or multiple unit trains. It is only under exceptional circumstances that it may, at present, be considered economical for street railway operation in the compact distribution systems of cities and towns.

Transmission and distribution of energy from power plants to moving cars or trains by the single-phase system is simple and economical, and a high efficiency is obtained.

The first great economy of single-phase system is in the first cost of installation, whether power be generated or purchased. The first cost of rotary converters and intermediate feed wires is dispensed with, and a further saving is effected in first cost of sub-stations. Instead of comparatively large buildings at frequent intervals, the single-phase system requires only small substation buildings at long intervals. These need be nothing more than shelters for transformers and in many cases outdoor transformers may be used.

The second great economy of alternating current operation is found in the item of fixed charges and operating costs. Since the first cost of apparatus and installation is lower than for direct current, the items of depreciation, interest, taxes and insurance are less as a direct consequence.

In operating expense the first saving apparent is that of attendants at sub-stations. The moving machinery required for conversion to direct current requires constant attendance, with day and night operators; while the alternating current transformers, whether sheltered or standing outdoors, require little attention other than visits at convenient intervals.

In the matter of power consumption, the records obtained from a number of operating companies show that the kilowatt hours generated per car mile are considerably lower for single-phase equipment than for direct current equip-

Alternating Current in Railway Service, Indianapolis & Cincinnati.

ments operating cars of the same general dimensions and design, under similar conditions, from a sub-station fed trolley.

The first cost and weight of single-phase rolling stock equipment is somewhat greater than that of direct current apparatus and the maintenance charges are somewhat higher, but the savings in first cost of the complete electrification, fixed charges and operating expenses far over-balance these considerations.

From an operating standpoint the single-phase system has numerous favorable features. It is capable of the highest speed and yet the speed control is entirely flexible and unlimited. Any desired amount of power can also be provided for by transformer taps.

An important feature of advantage for interurban roads and main lines is its adaptability for multiple unit train operation. A single-phase system laid out with the minimum copper and sub-station requirements can operate trains of many cars. Among numerous instances it may be mentioned that the Chicago, Lake Shore & South Bend Railway recently operated an 11-car train, made up of six motor cars and five trailers, for a distance of more than 60 miles over its line without interfering in any way with the regular service maintained. A number of the single-phase roads now in operation regularly operate trains of from two to five cars without having found it necessary to add any feeders to the overhead line as laid out for single-car operation.

Another advantageous feature is found in the voltage step control of single-phase equipment, in which every speed is an efficient speed. A fact not widely known is that this control renders the equipment much better adapted for bucking snow than the direct current resistor-equipped car. Last winter the Glen Cove single-phase line of the Long Island (N. Y.) railroad was reported as keeping its schedule when all direct current lines on Long Island were badly tied up in a heavy snow storm. All single-phase lines report less trouble than others in snow storms and one report from the Chicago, Lake Shore & South Bend Railway mentioned that its cars actually made up time bucking snow.

Partisan opponents of single-phase operation have frequently asserted that it was unsuited to heavy service, and a paper read last summer went so far to assert that single-phase projects were practically abandoned in America. It was an amusing coincidence that this paper came out just before the Boston & Maine Railroad signed contracts for the single-phase electrification of the Hoosac Tunnel, and that at the same time the New Haven interests ordered additional Westinghouse single-phase locomotives. The New Haven had also, after three years of trial, placed contracts for single-phase electrification of its Harlem River division and has planned to extend single-phase electric operation to all traffic over the whole division between New York and New Haven. At the same time also, equipment was

Road—	Miles of Road.	Trolley. Voltage.	Trolley. Cycles.	Schedule. Local.	Schedule. Exp.	Class of Service.
Chicago, Lake Shore & So. Bend Railway	76	6,600	25	33	65	Freight & Int. Pass.
Denver & Intr. Rwy. Co	54	550	D. C.			
		11,000	25	30		Steam R. R. Pass.
Erie Railroad Co	34	11,000	25	26		Steam R. R. Pass.
Ft. Wayne & Springfield	21.6	6,600	25	26.5	45	Int. Pass. & Frt.
Grand Trunk Rwy.—St. Clair Tunnel	3.7	3,300	25	10		Steam R. R. Frt.
Hanover & York St. Rwy	18.58	6,600	25	26		Int. Pass. & Frt.
Indianapolis & Cincinnati Traction Co	108	3,300	25	37	47.7	Int. Pass. & Frt.
Long Island R. R	4.85	22.00	25	28		Suburban Pass.
Maryland Elec. Rwy	24.93	6,600	25	36		Steam R. R. Pass.
N. Y., N. H. & H. R. R	34	11,000	25	26	60	Steam R. R. Pass.
Pgh. & Butler St. Ry	38	6,600	25	25	50	Int. Pass. & Frt.
San Francisco, Vallejo & Napa Valley R. R.	33.84	3,300	25	23	54.5	Int. Pass. & Frt.
Spokane & Inland Empire R. R. Co	130	6,600	25	21		Steam R. R. Frt. & Pass.
Visalia Elec. Ry	22.2	3,300	15	31	62	Steam R. R. Frt. & Pass.
Rock Island & Southern Rwy			25			Int. Pass. & Frt.

Table Showing Present Status of Alternating Current in Railway Operation.

being built for an entirely new single-phase interurban line in Illinois (the Rock Island Southern), other single-phase roads were increasing their equipments, and the Westinghouse Company at Pittsburg was furnishing all of the electric apparatus for these roads. Another notable example is found of thoroughly satisfactory operation of single-phase apparatus in the St. Clair Tunnel, where all of the traffic of the Grand Trunk Railway has been handled electrically for nearly three years.

Recent information announces that, after exhaustive investigation of electric systems, the Prussian Government has adopted single-phase motors with an aggregate rating of 1,900 h. p. and a speed of 74.4 miles per hour for the standard electric locomotive for trunk line service. The Vienna-Pressburg and another Austrian railroad are now to be operated with 15-cycle, 10,000-volt, single-phase current, as will be the Rhatisch Mountain Railroad in Switzerland.

From lists recently published in the Elektrische Kraftbetriebe und Bahnen of single-phase railways equipped by two of the German manufacturing companies it appears that these companies have equipped thirty-two railways with 433 single-phase locomotives or motor cars of an aggregate horsepower of 206,145, which surely indicates progress and satisfactory performance. In England the London, Brighton & South Coast Railway, nine miles in length, was equipped with the single-phase system and put it into operations in December, 1909. Its report for the first six months of 1910 shows the enormous increase of 91 per cent in passenger traffic, and the system has been so successful that the company is now reported to have determined upon immediate similar equipment of its entire line of nearly 500 miles of track.

In France, the Midi Railway is now equipping some 150 miles of double track on the single-phase system and a few tramway lines are giving it a trial.

Full particulars as to all single-phase railways in America are not at the moment available, but the tables gives a partial list with some details recently obtained from the Westinghouse Company:

Since the single-phase alternating current series motor operates equally well on direct current, some railways have cars and locomotives equipped with control apparatus for both systems, and direct current trolleys or third rail shoes in addition to the single-phase pantagraph trolley. This arrangement was at first considered to be favorable for single-phase roads, since it permits operation through city streets and elswhere over the tracks of connecting direct current roads, and at the same time secures single-phase economy for the main line, but its application has restrictions.

On main line railways, where terminal connections render provision for both forms of operation imperative, it is perfectly practicable. This is fully shown in the successful operation of the New York, New Haven & Hartford Railway which is obliged to enter the New York City passenger terminal over 12 miles of direct current electrified line; but where it is not essential it is undesirable and should be avoided. Provision of double control equipment increases first cost and adds materially to the weight and to the maintenance charges. In some instances where it has been attempted on interurban roads with city connections, the weight of the cars has been found detrimental to ordinary tracks in city streets, with a resultant condition of under-strains on cars and equipment, but it has been amply demonstrated that single-phase operation over suitable tracks through city streets is entirely satisfactory; and when interurban roads have their own lines through or into cities and towns, local and through conditions are equally well served.

The practical success of alternating current in railway service is now thoroughly proven in so many installations in the United States and abroad that it must soon become familiar to many who have been opposed to its use. Its scope includes practically all of the railway field in which length of line is greater than the few miles can be economically served from direct current converters.

Alternating Current in Railway Service, Erie.

TRIALS OF CONSTRUCTION AND ROUND HOUSE WORK.

A. C. Loudon.

An eastern railroad mechanical man is used to trouble. Overcoming difficulties is part of his daily work, but transplant him from Eastern to Western conditions and particularly if he be a round house man, he will require re-education to no small extent before he will successfully handle the equivalent of his Eastern work. Locomotives will go weeks between washouts in the East where in the greater part of the West they can only safely run days, and they will develop troubles, and particularly boiler troubles.

But, take an Eastern shop or round house man and place him on a Western railroad during the period of construction and he will be what might be termed "up against it." Track laying and ballasting have almost invariably to be carried on at points where there are no facilities and the man in charge of the mechanical matters has to exercise his ingenuity to a considerable degree to keep things moving.

In all construction work the greater part of the repairs made must be made at night as the construction gangs work, as a rule, from daylight to dark. Any repairs—for instance to a track layer—which extend into the regular working hours of the track laying gang and prevent the machine from working, necessarily prevents the men from working also and the company may be put to the expense of hundreds of dollars for wages and board with no returns to show.

The basis of most track laying machines is a set of carriers on either side of a flat car, one set to run ties and the other rails forward from the material cars in the rear. These carriers are driven by an engine which takes steam from the locomotive handling the track laying outfit. The ties and rails are swung into place at the front of the car by hoists, the whole machine, with the material cars, being pushed forward as fast as the rails can be put in place and bolted together. There are from two to six engines and train crews hauling material, the number depending upon the length of haul. This material hauling has, of course, to be done on unballasted track, the only available ballast frequently lying ahead of the tracklayer. The result is that engines are extremely hard on springs and spring gear. With no telegraphic communication it is difficult to get material promptly, and when a spring breaks it is simpler to put a hard wood block over the driving box than to tie up the work. The writer knows of an engine handling a track layer running two months with blocks over driving boxes. That all engines carry chains and car replacers is absolutely essential. Derailments are part of the construction man's daily life; in fact, are so frequent that most of them are forgotten a half hour after they occur.

By far the greatest difficulty, particularly in a country where streams and ponds are few, is the question of water supply. On a railroad under construction tank cars are among the most important of the rolling stock, and must be kept in good condition. If water is available in streams, a steam syphon is generally placed in these streams at convenient points and by connecting the steam hose to the engine and turning the discharge into the tender manhole, a locomotive can readily furnish its own water. Where this cannot be done, the only way is to run a water train periodically from some point where there is a water supply.

There are four men who are indispensible in a construction gang, a machinist, a blacksmith, a boilermaker and a washout man. This is particularly true of a ballast gang. A ballast pit has (added to the locomotive and car work) the complication of steam shovels and unloading machines. Like the track layer, the steam shovel must be kept going. If it stops the whole work stops.

The writer had charge of the mechanical work at a large ballast pit in the center of a district of very bad water. A week was the very most that an engine could go without washout and there were twelve hauling engines, two loading or spotting engines, and two unloading engines to be taken care of besides two steam shovels and two unloaders. The "spotting" engines derived their name from the fact that they consecutively "spot" the car of a train beside the shovel for loading. When the train is loaded, it is placed on a track set aside for loaded cars and replaced at the shovel by a train of empties. This work of changing trains must be done with all possible speed to avoid delay to the shovel. Cars in bad order are thrown on a track by themselves for repairs.

The hauling engines, so far as possible, were run in such order that two could be washed out each night. The washing out plant consisted of a vertical boiler and a duplex pump, the boiler also providing steam for a blower for getting steam up on the engines after the washing was completed. The spotting and unloading engines were washed out on Sundays, the latter being done first in order that they could get back to the unloading point for the first trains Monday morning. The water was so bad that all hauling engines had to have tubes caulked on account of leaking every time they came in, while the spotting engines seldom got through a day without the majority of their tubes leaking.

The amount of ballast per day taken out of this pit during that summer formed a record on the road and this record was made with neither steam shovel nor any other engines receiving repairs other than those that could be made on the spot. Three of the engines developed leaky throttles which were ground in at night while the engines were under washout. One engine broke a bottom guide bar. There, fortunately, was among the iron sent for the blacksmith's use, a bar of 3"x4" steel. This was cut the required length with a cold set, holes for bolts punched, there being no ratchet, and put in place after being draw-filed, to remain until the engines went to the road's main terminal for repairs in December, having been put on in May.

Another engine once arrived, just before midnight, with a tender wheel so loose on the axle that the tender had been off the track five times in the last mile. The tender axles had 5½x10 in. journals, while the only pair of wheels available had an axle with a 5x9-in. journal. It is not by any means recommended for adoption as general practice, but it is nevertheless a fact that a 5x9-in. axle with its corresponding brasses will do business with perfect satisfaction in 5½x10-in. journal boxes. The wheels with the 5x9-in. axle went under that tender with no hesitation on the part of those putting them in. The difficulty was the getting them in. It was very dark and raining hard and the only out-of-the-way place was on some very soft ground. For raising the tender there were available two 15-ton journal jacks and a quick-lifting track jack. The tender had to be raised 18 ins. to allow the wheel flanges to clear the buffer beam, and the ground was so soft that three tiers of ties sank out of sight before the tank began to rise. As the journal jacks had only 5 ins. lift, they had to be taken out six times and reblocked, the weight being held on one journal jack and the track jack while the other journal jack was being reblocked. The engine was back in service at 11:30 the next morning, 11½ hours after arrival.

When a new road gets to the point of handling some revenue traffic, the round house foreman has, if anything, a harder proposition to face than the construction man. The main reason is that greater results are expected and delays and failures more closely watched; yet, if the terminal be recently opened, he has in all probability few, if any, more facilities than at a construction point. Perhaps the round

house building is complete, but the heating plant is not and a round house with no heat in a northwestern winter is almost as little use as no round house at all.

Some of the experiences of one foreman during a very severe western winter may be of interest. The traffic requires the handling of four passenger engines, two yard engines, and an average of eight through trains daily in a twenty stall round house in which the heating system was not advanced far enough for operation and the washout and pumping plant not yet installed. The only washout work attempted was that of the two yard engines, this being done by attaching the hose to the injector of another engine.

Just in the most severe part of the winter when the temperature was frequently 40 degs. below zero, the well furnishing the water supply suddenly went dry, and it was necessary to commence the use of tank cars, hauling the water supply in these a distance of 35 miles. As there was no pumping plant in the shops, the engines had to be run along side of the cars out doors, and connected to a syphon through the steam heating line. The troubles attending this work can readily be imagined. Steam hose burst and had to be renewed right at the time when an engine had to be hurried; steam pipes cracked and broke off when the steam was turned through them; the discharge hose lining turned down and blocked the flow of water and the hose had to be removed and a piece cut off. The worst trouble was in keeping men. It required four men to handle the heavy syphon from one car to another and when this had to be carried on in a temperature which for three weeks did not rise above 28 degs. below zero, frequently with the wind blowing a blizzard and on the top of ice-coated cars, men could hardly be blamed for quitting in disgust. Although the cars were steam heated and could, while on the road, be connected to the locomotive boiler, the shortage of water prevented keeping an engine attached to them while in the yard, consequently they soon began to fill up with ice.

It is said that it never rains but it pours, and this seemed to be borne out by the unusual number of troubles requiring the use of extra water just at a time when it could least be spared. Boiler checks stuck and the water had to be lowered in the boilers in order to get at them. Tank valves became disconnected and tenders had to be drained to get the valves connected again. With no heat in the round house, engines had either to be kept alive or drained; but the heating plant was finally started and one of the first necessities was the bringing into the shop, one at a time, of the tank cars and thawing them out. The water being so scarce for over two weeks the stationary boilers were kept alive by turning the feed pump suction line into the shop drain.

About midnight of the coldest night of the winter, the temperature being 44 degs. below zero, both feed pumps became clogged with dirt and refused to work. After an hour's fight with the pump the fires had to be pulled from under the boilers. When the pumps and suction pipe were finally cleaned out, the boilers had to be filled with pails. Before the round house again got warm enough to prevent the suction pipe from freezing, it had to be thawed out four times over its entire length of 50 ft. with burning, oil-soaked waste, and in the meantime two locomotive injector branch pipes and a lubricator that had been overlooked in the rush, had frozen and burst. The same morning the water train was derailed about 10 miles from the terminal just after an engine had been ordered for an important passenger special. The engine was backed up to a tank car that had been thawing out in the shop, a bucket brigade formed and the tender filled with pails.

After seven weeks of this, a long-waited pump that had been misdirected in shipping arrived and was installed. From that time on the tank cars were run into the shop, thawed out and drained into a pit below the floor level and the water pumped into the tenders.

In construction work, as in all railroad work, the watchword is "Economy." The output must be kept up and the expenses down, and the key to economy is organization; but the formation of a successful organization under such conditions as those just mentioned is next to impossible. Men cannot be disciplined or urged as they can under ordinary conditions On the contrary, they get so they care little whether they work or not, and require very gentle handling, or the foreman suddenly finds himself with a much depleted staff, in all probability no opportunity to replace the men. In this case, after three attempts to build up an organization that could be depended on to handle the work with the greatest economy, and the failure of each attempt, it had to be given up until warmer weather brought more favorable conditions.

A word might be said as to the effect of the make-shift of construction conditions on a man's thoroughness. It may be thought, and naturally, that construction work would unfit a man for the handling of back-shop repair work. In the majority of cases the contrary is true. A construction man learns from experience the value of a thorough overhaul to motive power. He knows that if the work is done thoroughly in a general repair shop the man who has the running work to handle will have less trouble with his engines and that his reports will reflect the back-shop methods in the office of the master mechanic or the superintendent of motive power. In all probability he has in his construction work had work to do which could have been avoided by proper general repairs and has stated this in his report; consequently if he later has the back-shop himself, he will be careful to avoid the necessity of making apologies. Construction work brings home very plainly the all-around value of thorough general repairs in reducing engine failures and expenditure for running repairs.—"Loco."

RECENT DEVELOPMENTS IN TESTING BOILER TUBES.*

By F. N. Speller.

It is generally understood that much depends on the boiler tube, especially in locomotive service, this being relatively the weaker member, so the usefulness of the engine is frequently determined by the strength of the weakest tube.

A variety of specifications have been drawn up, with that of the American Railway Master Mechanics Association as a basis, to regulate the quality of the material and the manufacture of locomotive boiler tubes. At the present time each road has a specification of its own, usually differing in some points from the others, but in general they require a flanging, flattening, or crushing down test on one out of each lot of 100 or 250 tubes. In the manufacture of lap welded tubes we have found it necessary, in order that the tubes will be, as far as possible, uniformly satisfactory, to make such tests on each end of every tube, and have designed a special machine to make these tests on the crop ends as they are cut off.

Among the various requirements in specifications written for locomotive boiler tubes, there are naturally in each many excellent provisions, some of doubtful value, and often a few clauses which tend to produce the opposite result from that for which the specification was written.

Locomotive tubes, whether seamless or lap welded, must sooner or later be safe ended, hence the welding quality of the metal should be one of the first considerations in manufacture. Some specifications now written restrict the chemical composition in some particulars, so as to hamper the manufacturer in making a good welding steel. There is no difficulty in making steel with a maximum of .03% phos-

*From Paper Read Before the American Society for Testing Materials.

phorus if necessary, but there is reason to believe that .05 phosphorus is a more reasonable maximum limit which does no harm, and with other conditions the same, will give a tube better adapted to service and much easily welded.

Another restriction which experience teaches is operating against the best quality of locomotive tubes is unreasonable sulphur requirements. The highest sulphur allowed in samples taken from individual tubes is, in some cases, .035%, which means that the ladle test must not exceed .030%. With producer gas this means that the heat must often be held and a heavier burden of lime carried, which tends to render the steel "dry" in welding and more liable to be crystallized or burned. If there is any advantage in

DIAGRAM SHOWING AMOUNT OF SULPHUR ABSORBED BY TUBE ENDS FROM FLUE GASES IN LOCOMOTIVE FIRE BOX.

PER CENT SULPHUR { LOWER SHADED PORTION, ORIGINAL S. / UPPER OPEN PORTION, INCREASE S. IN BEAD

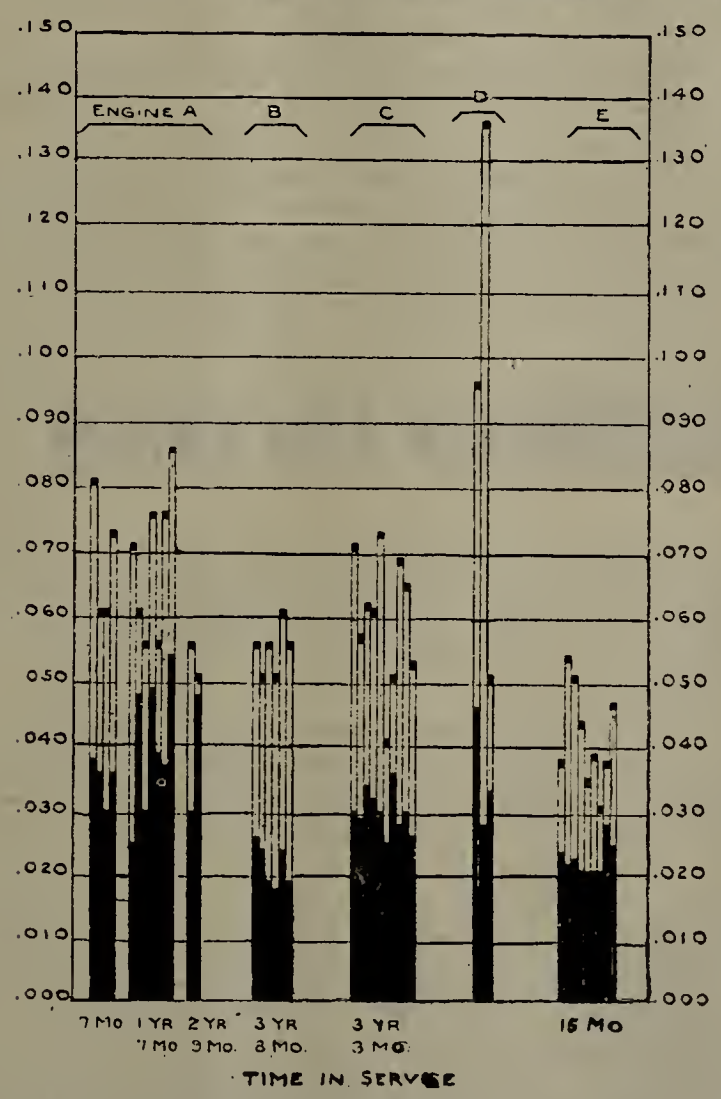

a closer sulphur specification than say .050% on samples taken from individual tubes, we would be glad to learn what is gained thereby from those who have had more experience. Personally, I have not found a case of failure which could be attributed to the sulphur being as high as .05%; on the other hand, there are undoubtedly countless numbers of tubes giving good service which carry close to this amount of sulphur.

Analyses of the surface of beads taken from tubes after being in the boiler some time, show that sulphur is absorbed from the hot flue gases, so that if there is any advantage in using steel of .030 sulphur, it would appear to be only temporary. The results of this investigation are given in the diagram, Figure 4. The engines from which these tubes were taken had been operating on different roads under widely different conditions, but in each case the tubes had all given equally good service and were being removed for safe ending. It also appears from a comparison of the sulphur taken up by individual tubes under the same conditions, that there is no consistent relation between the original sulphur and the amount absorbed, so that it does not follow because the tube was originally low sulphur, that it would therefore show comparatively low sulphur after being subject to the action of the hot flue gases; the results rather suggest that the low sulphur tubes are more susceptible to sulphurizing by the hot flue gases.

A study of records in lap welding may throw some light on the relative influence of variations in sulphur contents. For example, two heats which had been rephosphorized gave the following welding records, each piece being tested in the flanging machine after the first run through the welding furnace and rejected if there was any indication of opening at the seam;

Heat No.	No. of Pieces	Chemical Analyses. S	P	Mn	C	Per cent not welded
3432	1,272	.045	.036	.43	.105	14.7
30522	1,401	.027	.037	.47	.113	20.2

The average of nine heats of steel which ran .03% sulphur or less showed 20% more rejections on account of bad welds than eight heats where the sulphur ran over .04%, these heats being nearly the same in other respects.

As to the effect of foreign elements in these amounts on the corrosion of steel under ordinary conditions, we have no evidence that their presence has any decided effect one way or the other in well made steel, and the grade of soft steel made exclusively for the manufacture of pipe certainly belongs to this class. The degree of uniformity obtained even between individual Bessemer heats made for this purpose, is, it is safe to say, as good as that shown in the records of the most highly refined product of the open-hearth furnace and uniformity, both physical and chemical, is undoubtedly a large factor both in welding and corrosion.

The supposed beneficial effect of great purity has, I believe, been greatly overestimated. Some time ago the writer found by using the sensitive ferroxyl test that cross sections of steel which had all the variations due to segregation would not show a regular difference of polarity under repeated tests made on the same section, the explanation evidently being that external influences such as finish and accidental irregularities in oxidation predominated and overpower the much smaller differences in potential due to irregularities in the metal itself.

We believe it would be to the advantage of all concerned if a standard specification was agreed upon for boiler tubes, with which there could be no objection to a test on the ends of each tube along the lines described above, provided the chemical requirements were not unnecessarily restrictive.

Personals

G. F. Hess has been appointed superintendent of machinery of the Kansas City Southern and the Arkansas Western at Pittsburg, Kan., succeeding J. W. Small, resigned to accept service with another company.

John W. Kearney has been appointed manager of the new publicity department of the Missouri Pacific, with office at St. Louis.

William C. Welden has been appointed purchasing agent of the Colorado & Southern with headquarters at Denver, Colo.

A. De Bernardio has been promoted from superintendent to general superintendent of the Missouri Pacific at Kansas City, Mo., succeeding W. J. McKee, resigned.

Mr. Marca, formerly master mechanic of the Toledo, St. Louis & Western, has been appointed general superintendent of the Grand Rapids division, Pere Marquette R. R., with office at Grand Rapids, Mich. Mr. Marca succeeds Theodore Ensel, resigned.

P. H. Reeves, formerly motive power inspector on the Baltimore & Ohio Southwestern, has been made master mechanic with office at Chilicothe, O., succeeding G. T. Hess, who has accepted a position with the Kansas City Southern.

Alex. Telford, Pur. Agt., C., N., O. & T. P. Ry; Mrs. Telford and Son, Elliott—A Close Inspection Will Reveal an Interesting Situation.

N. S. Brooks has been appointed general foreman with headquarters at Storrs, Cincinnati, succeeding W. F. Hayes, resigned on account of ill health.

W. O. Thompson, master car builder of the New York Central & Hudson River, at East Buffalo, N. Y., has had his authority extended over the St. Lawrence, Ontario and Pennsylvania divisions. G. E. Carson, master car builder at West Albany, has had his authority extended to include the Hudson, Harlem and Putnam divisions.

F. C. Moeller has been appointed night roundhouse foreman of the Chicago, Rock Island & Pacific, at Silvis, Ill., in place of J. Fitzgerald, who has been made machine foreman at Chicago, succeeding George Stone, promoted. W. O. Morton has been appointed night roundhouse foreman at Burr Oak, Ill., succeeding William Glenn, promoted.

D. W. Cross has been appointed acting master mechanic of the Toledo, St. Louis & Western, with office at Franklin, Ind., succeeding Mr. Marca, who has accepted a position with another company.

L. L. Ulrey has been appointed foreman of the air brake department of the Chicago & Eastern Illinois; the office is at Oaklawn, Ill.

A. S. Abbott, master mechanic of the St. Louis & San Francisco, has been appointed mechanical superintendent of the first district, office at Springfield, Mo. I. Foster, master mechanic at Kansas City, has been appointed mechanical superintendent of the Second district, with office at Springfield, Mo.

Walter J. Donley has been appointed master mechanic of the Illinois Central; office at East St. Louis, Ill. Mr. Donley succeeds F. G. Colwell, resigned to accept service with the Delaware, Lackawanna & Western.

H. A. Witzig has been appointed master mechanic of the Missouri Southern in charge of shops and rolling stock, office at Leeper, Mo., succeeding Thomas Goulding, resigned to accept a position with the Chicago, St. Paul, Minneapolis & Omaha.

J. B. Austin, Jr., engineer maintenance of way, has been appointed superintendent of the Long Island R. R. at Jamaica, N. Y., succeeding F. Hortenstein, resigned.

N. J. Graves, assistant superintendent, has been appointed superintendent of the Missouri & North Arkansas at Leslie, Ark.

F. E. Williamson, assistant superintendent, has been appointed acting superintendent of the Mohawk division of the New York Central & Hudson River at Albany, N. Y.

M. Dailey succeeds W. J. McLean, who has resigned as master mechanic of the Bellingham Bay & British Columbia at Bellingham, Wash.

William Henry, master mechanic of the St. Louis & San Francisco at Monette, Mo., has been transferred with the same title to Neodosha, Kan.

L. E. Foote, road foreman of equipment at Francis, Okla., has been appointed master mechanic, with office at Francis, and J. J. Shaw, division foreman at Enid, Okla., has been appointed master mechanic at Enid.

H. Honaker, assistant master mechanic at Memphis, Tenn., has been appointed master mechanic, with office at Birmingham, Ala.

J. F. Long, general foreman of shops at Sapulpa, Okla., has been appointed master mechanic, with office at Sapulpa, succeeding A. S. Abbott, promoted, and B. A. Beland, roundhouse foreman at Springfield, Mo., has been appointed master mechanic, with headquarters at Fort Scott, Kan.

New Books

THE RAILWAY LIBRARY, 1910. By Slason Thompson; 456 pages; cloth, 6x8½; published by the Bureau of Railway News and Statistics, Railway Exchange Bldg., Chicago. Sent on application, accompanied by 15 cents for postage.

This book, which is issued annually, is a collection of the best papers and addresses on various phases of the railway question which have been issued during the past year. Among these papers are "Needs of the Railways," by Martin A. Knapp; "Half Slave and Half Free," by H. M. Mudge; "Co-operation," by Howard Elliott, and "Automatic Signals on German Railways," from the Bulletin of the International Railway Congress. The first article in the book is one written by Henry V. Poor in 1868 for the first edition of Poor's Manual, in which he comments on the progress and use of American railways, and gives his predictions of their future, which later, however, fell considerably short of the amazing progress that was made. The book contains some twenty-seven articles and they are well worth the time of anyone who is seeking for knowledge on the present railway situation, for the articles are by those eminently fitted to know.

* * *

"RAILWAY SHOP KINKS." By Roy V. Wright; 290 pages; cloth, 9x12 ins.; published by the Railway Age Gazette, New York. Price, $2.00.

At the 1910 convention of the International Railway General Foremen's Association, Mr. H. D. Kelley, of the Chicago & North-Western, was assigned the topic of "Shop Kinks" for the next convention. Realizing the broadness of his topic, he obtained the authorization of the executive committee to have published in book form a large assortment of "kinks" which were running in the "Railway Age Gazette." This was done, under the supervision of a committee of which Mr. Kelley was chairman. The kinks are classified by departments, such as machine shop, boiler shop, engine house, etc., and they are well illustrated with line drawings and photographs. A very complete index is given and it is a valuable and interesting book for the shop man, as well as a credit to its creators and editor.

Among The Manufacturers

NOVEL FREIGHT CAR.

The car here illustrated is one of three of entirely new design, recently delivered to the Westinghouse Electric & Manufacturing Company at East Pittsburg.

The steady increase in capacity, size and weight of assembled transformers has rendered their shipment more and more difficult, and special "cut out" steel cars, with strong central floors suspended at about axle height from heavy side frames, were built. These cars had a capacity in the well of 70,000 pounds, but even they were inadequate for the dimensions of 2,000 kva. tubular transformers such as the one here shown, of which 15 were ordered at one time by the Southern Power Company.

The new cars were built by the Atlas Car & Mfg. Co., of Cleveland, and the design is the joint product of co-operation between Westinghouse engineers and those of the car company, and the completed design had the approval of the Pennsylvania Railroad motive power officials.

The resultant car is entirely of steel, 35 feet long, and has a capacity in the well of 150,000 pounds, or 75 tons. For a load that can be spread over the entire car, on the end platforms as well as in the center, the capacity is 205,000 pounds. Notwithstanding this great capacity, the surface of the floor in the well is but 2 feet 2 inches above the top of the rails, giving a maximum amount of clearance under bridges.

The car frame is of heavy built-up steel girders. The trucks are of 205,000 pounds capacity, with 6 x 11-inch journals, 33-inch wheels of rolled steel, and M. C. B. springs of extra large capacity. Center plates are wrought steel and journal boxes, riders, brasses, etc., all conform to M. C. B. requirements for 205,000 pounds capacity journals.

Each car is equipped with Westinghouse air brakes, Westinghouse friction draft gear and M. C. B. automatic couplers. The car weight is 53,000 pounds.

The transformer shown is of the oil-insulated, tubular self-closing type, of 2,000 kva. capacity, 60 cycles, 101.200 volts, high-tension, and is for the Southern Power Company's station at Newberry, S. C. As loaded on the car, the extreme top part of the transformer stood 16 feet above the tops of the rails; and, on account of limitations of tunnels in the Allegheny Mountains and at Baltimore, it was shipped via Olean, Emporium, Perrysville, Belmar and Cape Charles City to Pinner's Point near Norfolk.

New Literature

"Three little stories of three big events," issued by the International Acheson Graphite Co., of Niagara Falls, N. Y., tells of Lincoln Beachey's aeroplane flight under the Niagara arch bridge and over the falls, of Ray Harroun winning the 500 mile race at Indianapolis, and of the winning of the Vanderbilt cup race by H. F. Grant. Each of these operators used "Oildag" for lubricating their engines.

* * *

Among recent bulletins of the Allis-Chalmers Co., Milwaukee, Wis., are numbers 1,080 and 1,512, dealing respectively with Allis-Chalmers alternating current generators and compound corliss engines. They are in the usual style of binding.

* * *

The Edgar Allen American Manganese Steel Co. of Chicago has recently issued two small booklets, one giving a complete list of manganese castings made by it and the other descriptive of the use of manganese steel in the ceramic industries.

* * *

The Joseph Dixon Crucible Co. of Jersey City, N. J., has just published a very neat folder entitled, "Maintenance Painting for Electric Railway." It gives excellent photographs of street railway viaducts, power plant stacks, and car trucks painted with Dixon's Silica-Graphite paint.

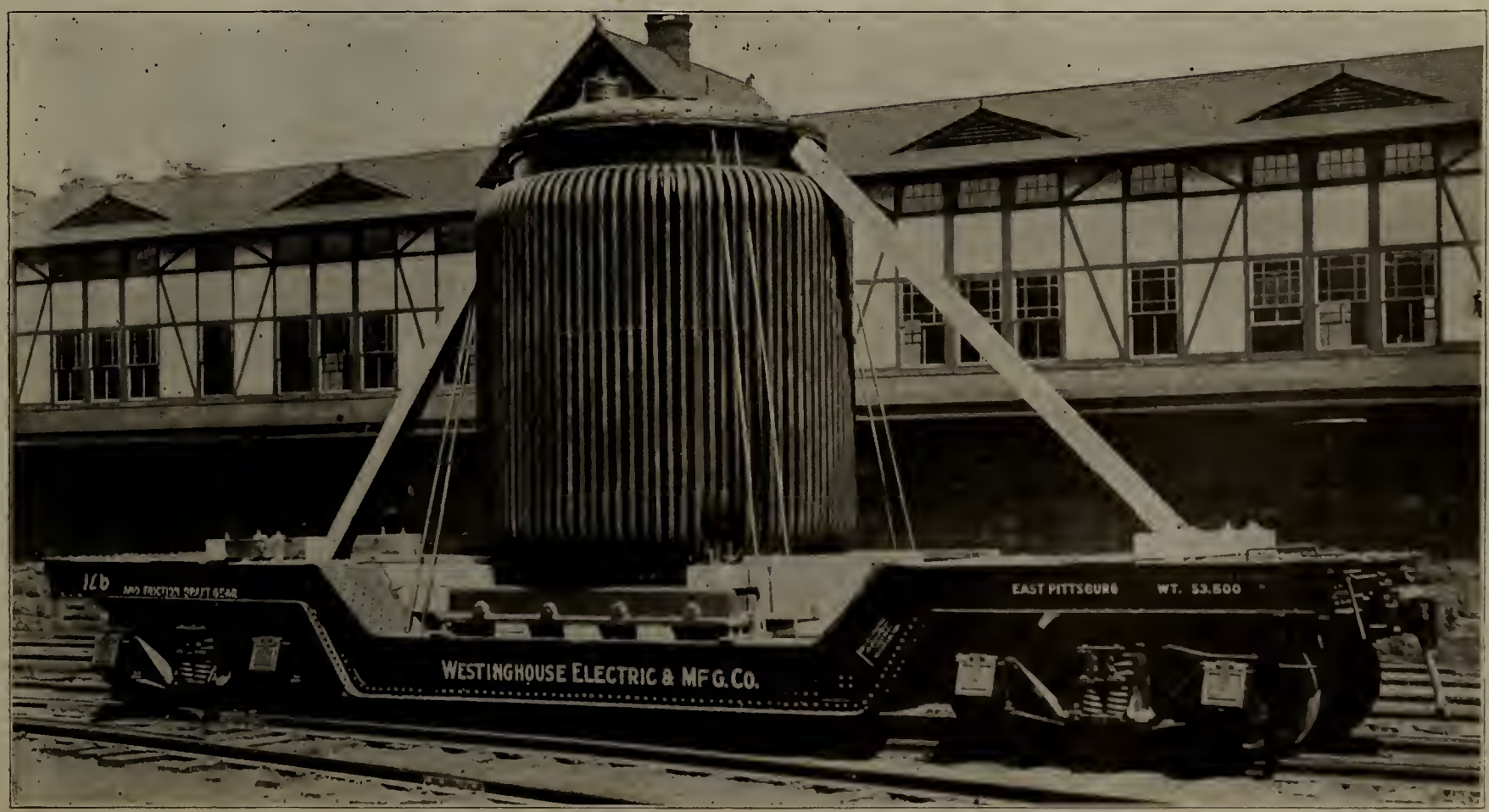

Special Car for Shipping Transformers.

The Fox Typewriter Co. of Grand Rapids, Mich., has issued a folder descriptive of the Fox typewriter. A noticeable feature is the small metal button at the corner, on which is the trade mark name "Fox."

* * *

Pratt & Whitney Co., of Hartford, Conn., has issued catalogue number 6 entitled "Small Tools." It is of convenient size for shop use, printed on good paper and contains a full line of small tools needed about the shop, such as taps, drills, cutters, etc.

* * *

The Carnegie Steel Co., of Pittsburg, has distributed a booklet on steel derricks and drilling rigs for oil and gas well work. It contains considerable descriptive matter on the subject, together with a number of illustrations.

* * *

The Garvin Machine Co., of New York, has just issued its new catalogue, "Edition D A," which supersedes "Edition D." It is a neat booklet, describing the various types of milling machines, grinders, drills and slotting machines manufactured by this firm.

* * *

The Blackburn-Smith pressure filter for removing suspended matter from water and other liquids, is very compact, using a number of cloth cartridges for filtration of the water. It is fully described in a recent booklet of James Beggs & Co., of New York.

* * *

The Bates Machine Co., of Joliet, Ill., has issued a booklet on "Cookson" cast iron heaters and receivers. The operation and construction of this feed water heater is carefully described.

* * *

The Kerr steam turbine is of the impulse type, the action at each of the nozzles being similar to that in a Petton water wheel. These turbines are made from 2 to 600 h. p. capacity and are said to be very efficient. The Kerr Turbine Co., of New York, has published a very attractive catalogue of these turbines.

* * *

"Hydraulic Pumps, Catalogue No. 81," is the title of a new 120-page catalogue, descriptive of many standard and several new types of hydraulic pumps. This catalogue issued by the Watson-Stillman Co., 50 Church St., New York, contains much information for hydraulic engineers and users of hydraulic machinery. This firm has also issued a folder in which are summed up the principal arguments in favor of the Chambers Throttle Valve.

* * *

The Browning Engineering Co., of Cleveland, has recently published a booklet on "Browning" locomotive cranes, which is up to the usual high standard of this firm. The booklet is of very attractive appearance and is full of excellent photographic reproductions showing interesting applications of "Browning" equipment.

* * *

A catalogue on "Heavy Lathes" has been issued by the Niles-Bement-Pond Co., of New York. It shows a large number of heavy engine and gun lathes ranging from 24 to 108-in. swing.

GAUGE GLASS PROTECTOR.

The Sargent Company, 1418 Fisher Bldg., Chicago, has for several years been supplying its so-called "Ironclad" water glass protector, made of curved wired glass, to safeguard the tubular water glasses—and it has recently devised a suitable and satisfactory means of safeguarding the lubricator glasses, the salient features of which are clearly shown in this illustration. The clips for securing the curved glass sections around the tubular glasses are made of light sheet metal, pressed into desired form with a circular opening in their center to engage the stuffing box, and are held in their vertical position by the stuffing box nuts. These sheet metal clips, top and bottom, receive the curved section of wired glass which is secured in position by a small bolt connecting the upper and lower clips.

This arrangement enables the engineman or roundhouse repair men to conveniently and quickly remove the protector for the purpose of replacing broken glasses. It is also claimed that the life of the tubular glasses is greatly prolonged by the protection thus accorded them from sudden changes in temperature caused by cold draughts or splashes of water. The design of the clips makes them applicable to any make of tubular glass lubricators.

The photographic reproduction herewith gives a very good idea of the installation of this device on a locomotive lubricator.

COLUMBIA HIGH POWER CHUCK.

Keeping pace with progress in the design of high power machine tools, Schuchardt & Schutte, 90 West St., New York, has placed on the market a new chuck herewith illustrated. This chuck called the "Columbia" is especially adapted to heavy work with high speed steel.

The strength of the old design of scroll chuck depends on the unhardened scroll thread and cast iron body and is unsatisfactory in regard to retaining its truth, when used for any length of time for gripping work of one diameter. The "Columbia" is built on new lines. The spiral thread for moving the jaws in and out is "V" shaped and is cut on the sloping inside surface of a steel ring, which is hardened and subsequently ground to obtain the greatest accuracy in regard to true running. The pitch of the thread is considerably finer than that of the ordinary scroll chuck, thereby increasing the gripping power and area of wearing surface. The "Columbia" chuck, however, is not adapted for

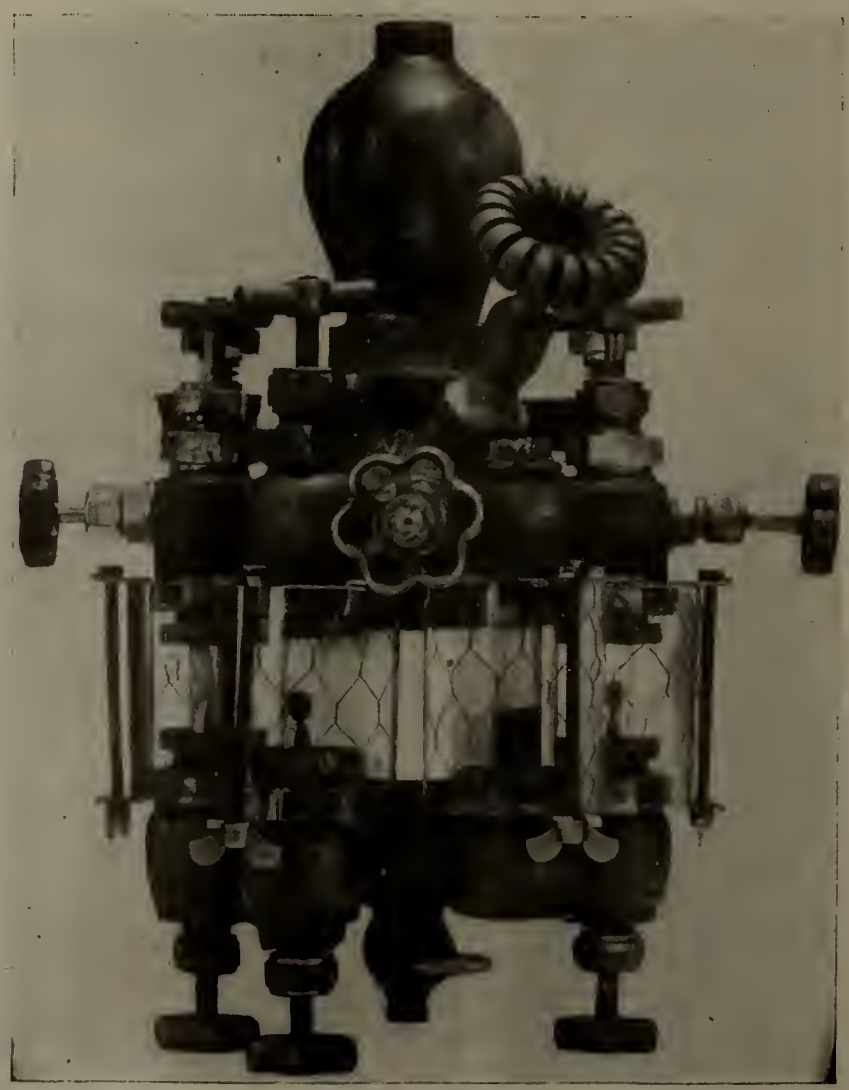

Gauge Glass Protector.

Columbia Chuck.

Columbia Chuck Unassembled.

holding rings on the outside. The sloping surface of the body gives support to the jaws and insures the greatest possible rigidity. As will be seen from the illustration, the jaws are almost covered by the chuck body and do not protrude. This reduces the possibility of accidents to the operator, from being caught by the hands or clothing.

FREIGHT HANDLING CRANE

Hand labor is being rapidly displaced by machinery in many branches of railway operation, from the handling of baggage by electric trucks (as in the Grand Central Depot, New York), to the loading and unloading of freight which weighs many tons. The saving in working and upkeep cost while considerable is perhaps not nearly so marked as that in time.

This fact is well illustrated by the new and old methods of handling heavy freight in the L. S. & M. S. R. R. yards at Cleveland. Formerly a stiff leg hand crane was employed of 15 tons rated capacity, but capable of handling a maximum of 20 or 25 tons. The radius of the boom permitted its operation over four cars. More than this number could not be handled without the assistance of a switch-engine. One operator was employed for the crane, and for loads over 15 tons, which demanded moving with rollers and crowbars on to the cars (or off), five assistants with a foreman, were also required. Considerable time was consumed and much extra labor needed especially during rush seasons.

About six months ago the Lake Shore installed a Gantry Self-Propulsion Crane. This crane has two hoists, the auxiliary of 5 ton rated capacity, and the main of 30 ton. Each of these is easily capable of 50 per cent overload. The span is 64 feet, and the height, 30 feet. Two sidings, each accommodating six freight cars run beneath the crane, and in this manner twelve cars can easily be reached. There is also a wide space for teaming trucks to drive under the crane near the sidings. The power is electricity. At the middle of bridge is a motor of 25 h.p., whose shafts connect at right angles with the shafts to the two front trucks, there being in all four trucks of two wheels each. This is the means of propelling the crane along the track. On the bridge is an enclosed four wheeled trolley which accommodates three motors of different sizes, one for each of the two hoists and one for the rack. The operator's cab is placed in the front of the crane. It is heavily enclosed, provided with windows, and contains controllers for all motors and the brake.

The saving of the new method over the old is very apparent. One operator is required and no assistants since one man only is required to attach the hoist and this is done by the one who comes for the load; no practical load is too heavy. The new crane operates over twelve cars, whereas

Gantry Crane in Yards at Cleveland, L. S. & M. S. Ry.

the old could handle but four. Lastly, the operation of handling the load by the new method takes about one-third the time the old method required.

This Gantry Crane has made thirteen heavy loads in twenty minutes. The old stiff leg crane with crew of six could hardly have accomplished the same job in less than two hours and a half.

Three hand operated cranes would be required to move the tonnage in the time required by the crane. In addition to this is the fact that under the old system there would occur about 18 overloads a week to the three cranes in handling the freight as it arrived. Each overload would demand a half hour's time from a gang of six men. A liberal allowance for electric current cost of the Gantry Crane would be $500 a year and the estimated net saving for a year is $2,500.

This Gantry Crane is manufactured by the Cleveland Crane & Engineering Co., Wickliffe, Ohio.

"HISEY" PORTABLE ELECTRIC PARALLEL GRINDER.

This accompanying illustration shows a "Hisey" 3-h. p. parallel grinder finishing a large radial drill column on a lathe after being rough turned, in the shop of the Mueller Machine Tool Co., Cincinnati, O. This operation saves great expenditure for equipment, also considerable time and labor which would otherwise be required to remove the column to a universal grinder.

"Hisey" parallel grinders are made in ½, 1, 2 and 3 h. p. sizes, carrying emery wheels 8, 10, 12 and 14 ins. in diameter, respectively. This is an efficient type of portable tool for heavy parallel grinding, and is particularly adapted for grinding rolls, journals, bushings, crank shafts, connecting rods, piston rods, wrist pins and piston rings. It can be used for various kinds of work on lathe, boring mill, milling machine and planer.

The base of angle plate is bolted in the tool-post rest of the lathe. It has a vertical adjustment of 4 ins. to bring it in line with the centers. The motor is wholly enclosed, guaranteed dust proof, is air-cooled, and the bearings are adjustable to wear. It is manufactured by the Hisey-Wolf Machine Co., of Cincinnati, O.

LANDIS STAYBOLT CUTTER.

The illustration shows a 1½-inch staybolt cutter manufactured by the Landis Machine Co., Waynesboro, Pa.

This machine has a double head and is motor driven by a variable speed motor with speed variation of 4 to 1, so that a very wide range of speeds can be had for taking in any work between minimum and maximum, also making it possible to take advantage of using either carbon or high speed steel dies as the case may require. On this machine the motor is mounted on top of the machine, and is direct connected to the machine. This motor has a speed range of 4 to 1 and any speed between the minimum and maximum can be acquired at any time without stopping the machine.

This machine is also furnished with lead screw attachments for one or both heads, as may be desired, and will be arranged to cut any pitch and any diameter within the range of the machine by changing gearing, no extra lead screw being required. All main spingles are provided with recesses to allow the lubricant to return to the oil tank and it is not carried out on the floor. On all these machines the Landis type of die is used and it is held in different manners to suit the different requirements.

DAKE REVERSIBLE ENGINE.

The Dake square piston engine has been in use for a great many years and is a familiar sight in shops, on derricks, on steamships and in power plants the world over.

Perhaps one of the most useful applications for this motor is in the railway shop with limited crane service. The chain hoist can be easily fitted with the engine and it may be operated by either air or steam. One of the illustrations shows a chain hoist thus equipped.

The engine, which is manufactured by the Dake Engine Co., Grand Haven, Mich., reduced to its simplest elements consists of nothing but two movable pieces, one sliding inside the other, and both floating in a square steam-tight box

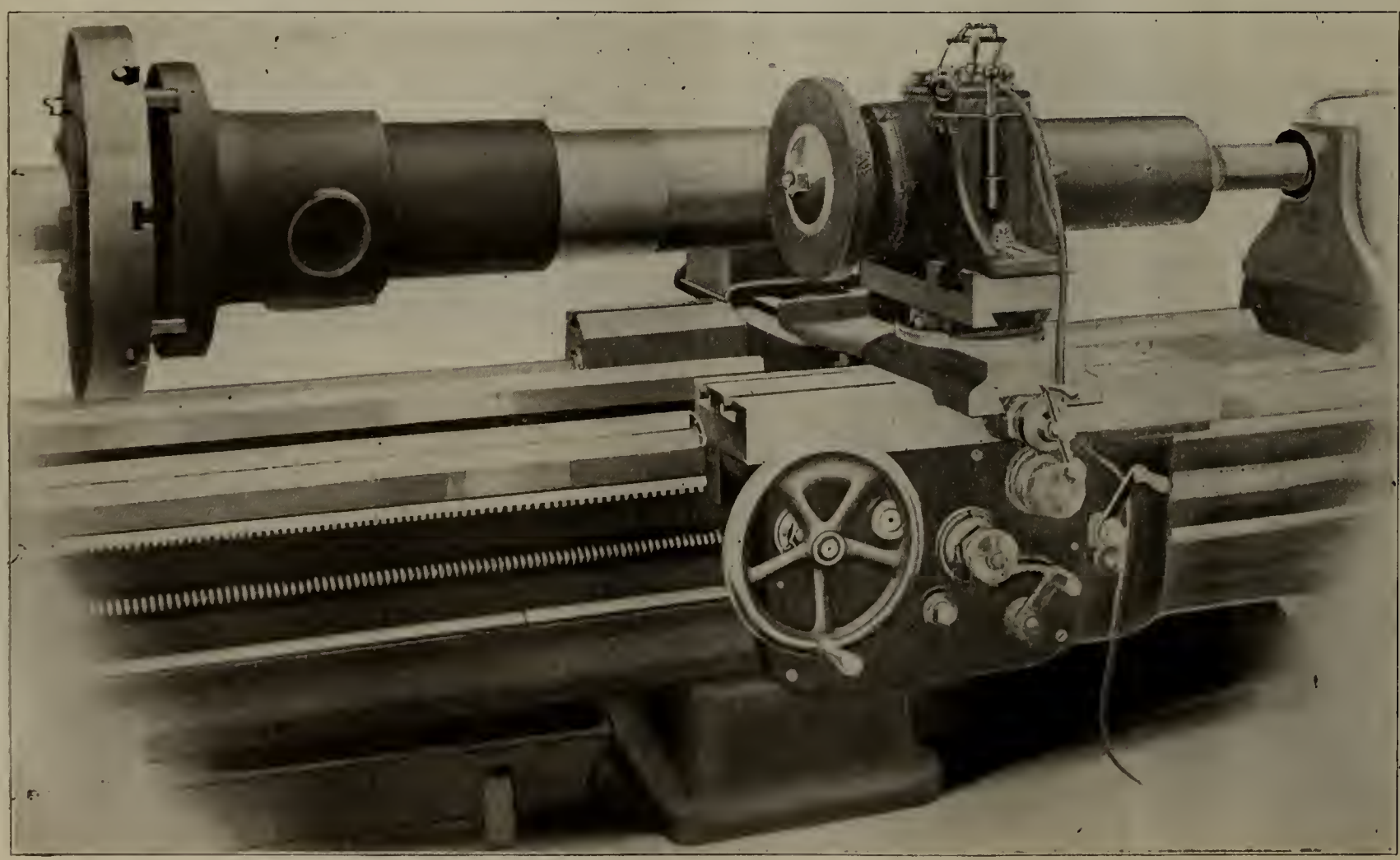

"Hisey" Portable Grinder Applied to Lathe.

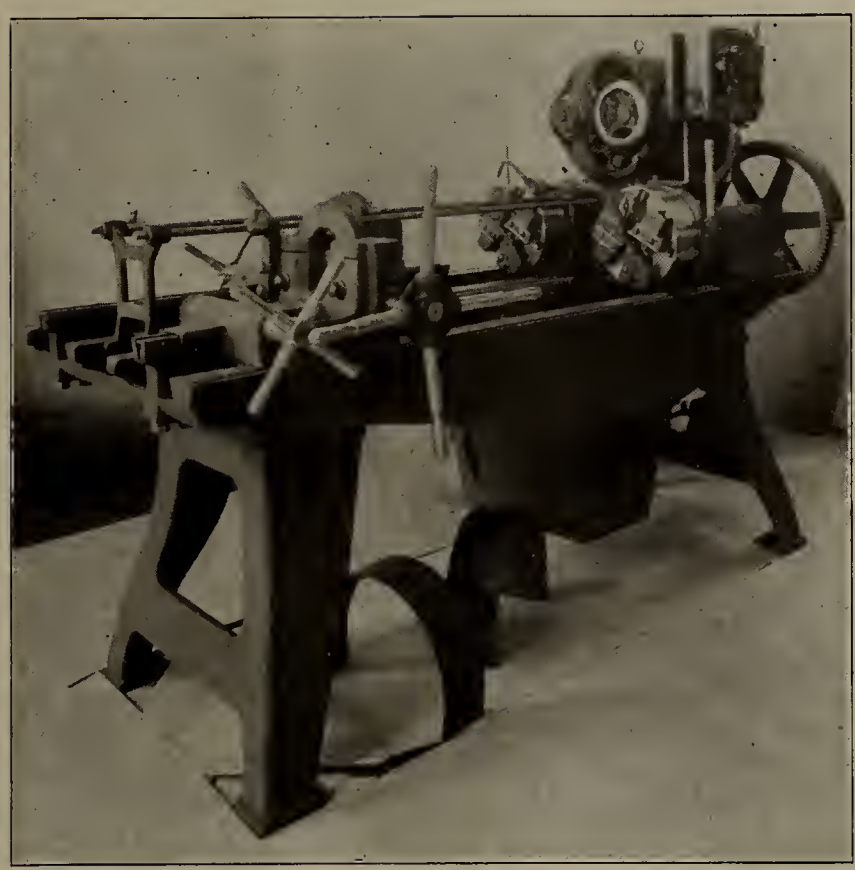

Landis Staybolt Cutter.

or cylinder, and being guided in their movements by the crank on the end of the driven shaft.

In practice the inner piston has removable shoes which can be adjusted to compensate for the wear, when necessary, and the cylinder is also provided with an adjustable wedge for the same purpose. The inner piston or cross head has, cored through its body, four ports, leading to the four sides, which communicate with ports cut in cover or cylinder head of engine. The engines are built upon correct and liberal lines—the wearing surface being ample for maximum loads. The bearing metal used in these engines is made from the best quality of phosphor bronze; the manner of applying steam to the crank, together with quality of metal, render them less liable to wear than in the ordinary engine, and will last in general use a long time.

NEW HIGH-SPEED AUTOMATIC HACK SAW.

A new power hack saw of the high-speed automatic variety has been placed on the market by the Armstrong-Blum Mfg. Co., 357 North Francisco Ave., Chicago. It is called "Marvel No. 5."

The machine is entirely automatic in its action. After a piece is cut off, the bar is fed forward and a new cut started, all automatically and without stopping, this operation being continued until the bar is cut up.

The stock is clamped in a vise which travels along the double track at the rear of the machine. When a piece is cut off, the saw rises and at the same time the vise opens. When the saw is up out of the way, the stock-feeding attachment draws the traveling vise and the bar forward until the end of the bar is stopped by the adjustable gage shown; the saw then starts down, the vise closing at the same time, and a new cut starts. The time required for this cycle of operations varies from ten to fifteen seconds.

The saw frame always moves horizontally, and it is actuated by a crank-lever which imparts a smooth, even cutting stroke to the blade and gives a quick return. The entire blade can be used by shifting the saw frame by means of a right and left-half screw on the connecting rod; this adjustment can be made with the machine in operation. The stroke of the saw can be changed from 4 to 6½ ins. by means of a shifting bolt in the crank. The chuck or vise has liberal dimensions, the jaws extending out flush with the saw blade. This vise will take stock up 8 ins., and it can be shifted forward or back or swiveled either to right or left for cutting

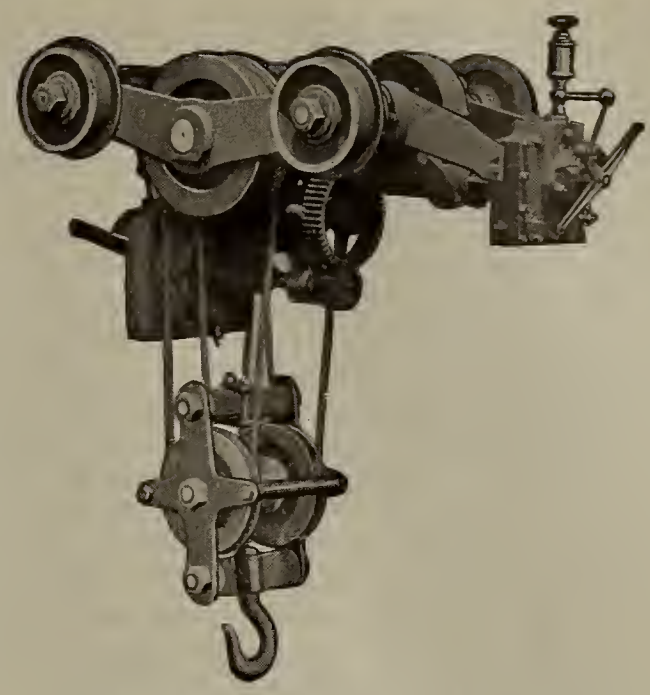

Dake Engine Applied to Chain Hoist.

Dake Air or Steam Motor.

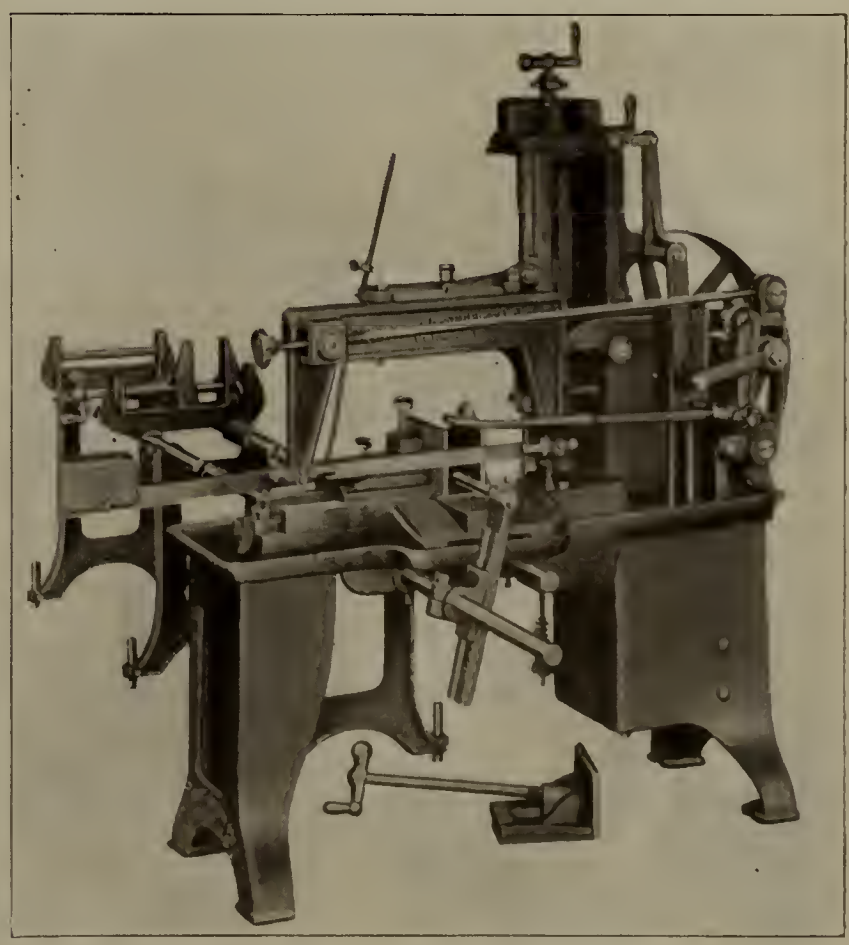

Armstrong-Blum Automatic Hack Saw.

to an angle. In a slot in the saddle back of the machine there are two dogs, the upper one of which may be set to stop the cut at any desired depth. Any pressure on the saw blade can be obtained by means of a friction disk at the top of the screw. The saw cuts on the draw stroke and lifts free of the work on the return.

This machine is provided with an overflow tank and a reliable plunger pump which gives a steady stream of compound on the saw blade. This pump, which is immersed in the bottom of the tank, can be removed with all its connections by simply removing two cap screws. An idea of this machine's cutting speed may be obtained from the following examples representing the performance of an ordinary hacksaw blade: Time for cutting 1-in. round steel, ¾ minute; 2-in. steel, 2 1-3 minutes; 3-in., 5 minutes; 4-in., 7¾ minutes; 5-in., 13 minutes; and 6-in., 24 minutes. Duplicate pieces are cut to the same length in this machine, and the automatic feature effects a considerable saving of time and labor. It is furnished, if desired, without the stock-feeding attachment.

NEW AUTOMATIC STEAM ENGINE.

With the rapid growth and popularity of the gas engine, the impression has become quite general that the small steam engine is no longer an important factor in engineering fields. This impression is, however, erroneous, judging from the experience of one of the largest manufacturers of small steam engines in this country. The mechanical stoker and similar advances in steam engineering have made the small steam engine indispensable and more essential than ever before. This is particularly true in plants where steam is a source of power, for in such plants the small steam engine proves an auxiliary which is very hard to equal both from the standpoint of economy and efficiency.

The Acme engine, formerly manufactured by the Rochester Machine Tool Works, of Rochester, N. Y., and now by The Sterling Machine Company, of Norwich, Conn., is one of the best known small steam engines on the market. It has been manufactured for the past twenty years and improved from time to time to meet the demands of the day for a rugged, simple and economical unit. The manufacturers have recently added several interesting features to this engine and a general description is given herewith which will undoubtedly prove interesting to the readers of this paper.

These engines are of the vertical 2-cylinder single acting enclosed type with a balance rocking valve and are splash lubricated. They are built in three series of sizes; the small series being 2⅛", 3", 3 5-16" x 3½" stroke. These small engines are identical in external appearance. The middle series is 3 5-16", 4", 4 9-16", 5" x 5" stroke. These four sizes being also identical in external appearance and practically of the same weight. The large series of three engines is 5", 6" and 7" x 7", being also of the same external size and general appearances. This range of sizes covers all the applications to which these engines are especially adapted. Because of the extreme simplicity of construction, the type of valve which adjusts itself to wear, the large bearing surfaces which are thoroughly well lubricated at all times by a splash of oil, they are especially well suited to drive mechanical stokers, for direct connection to small gear driven pumps, for driving rock drills and small friction hoists, and variety of belt or direct driven pumping machinery for contractors or irrigation purposes and for small plants such as laundries, creameries, etc., and has been adopted in a number of instances to marine service such as lighting, driving ammonia compressors, ventilating fans, etc.

The character of internal construction is especially interesting, showing as it does the influence of automobile engine practice in many of the details. For example, the crank shafts are drop forged and ground to very accurate size, the connecting rods are of the popular I beam section, bushed with bronze at both ends, the bearing cap on the crank end being held in place by castle nuts and cotter pins as is common in automobile work, the piston rings are of the diagonal cut type, two being placed above the wrist pin and one below. These rings are returned after cutting and ground to accurate size. The valve is a simple one-piece casting which is ground on the outside to fit a very accurately bored chamber and is fastened to the extended valve stem with a cross key in just the same way that the ordinary Corliss valve is fastened. A further point of considerable interest is the matter of automatic cylinder relief valves which are built into the cylinder heads to relieve any water that might otherwise cause damage. The governor is of a very simple type, consisting of four main pieces. The action of the weight being modified by four main pieces. The action of the weights being modified by means of a hardened

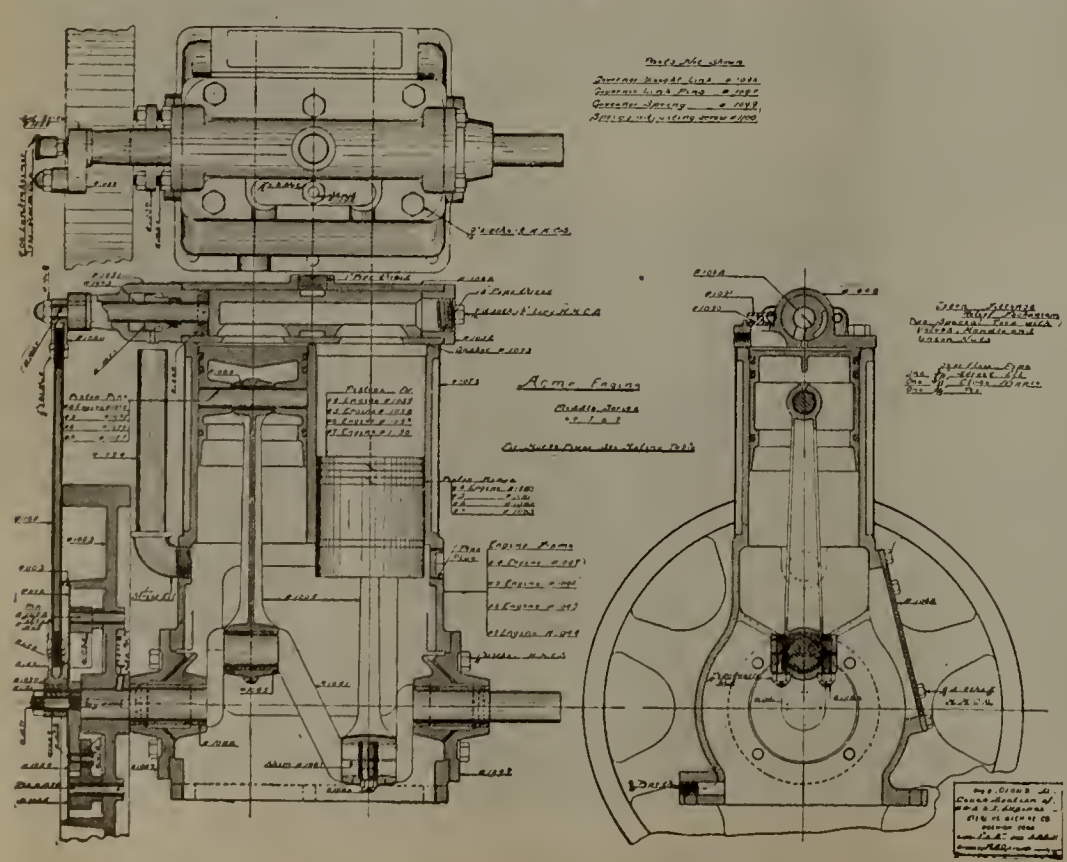

Acme Automatic Steam Engine.

Acme Automatic Steam Engine.

roller which travels in a milled arc. The entire governing mechanism is contained in an oil pocket, only the pin to which the lower end of the valve rod is connected being extended through and further inasmuch as this mechanism is on the outside of the fly wheel, it is very readily gotten at. There are but two grease cups requiring attention, all other surfaces being amply lubricated by the internal splash. Provision is also made in the base of the engine for the elimination of the condensation which may collect and the leakage from the valve stem stuffing box falls down into the engine base through the vent pipe at the end of the engine. The entire series of engines are built with new and accurate jigs on the interchangeable plan.

Industrial Notes

The Standard Tool Co., Cleveland, O., has appointed Mr. L. Hussey to the position of advertising manager.

The Allis Chalmers Co., Milwaukee, Wis., has appointed Mr. Fred S. Ely advertising manager, to succeed W. M. S. Miller.

Walter H. Brimson, formerly general superintendent of the Baltimore & Ohio Southwestern at Cincinnati, Ohio, has been made vice-president of the Economy Separable Switch Point Co., Louisville, Ky., with headquarters in that city.

The Pennsylvania Steel Co. plans a new machine shop, which will be 40 x 60 feet in floor area, to be built at its Steelton, Pa., rail department. The company will shortly begin the erection of a hospital at the Swatara street entrance. It has also remodeled a frame building near the steel foundry entrance, converting it into offices for the steel foundry officials.

The Western Electric Co. has received an order from the New York, Chicago & St. Louis Ry., for a complete telephone train dispatching circuit, consisting of 31 Western Electric selectors and telephone equipment.

The Crocker-Wheeler Co., Ampere, N. J., has opened offices in the First National Bank building San Francisco, Cal. A supply of motors, generators and transformers of various sizes will be carried in stock for immediate coast deliveries. John S. Baker will be in charge.

The Buffalo Steam Pump Co., North Tonawanda, N. Y., it is said, will remodel an adjoining factory building, which it recently purchased, and will place it in operation as a part of the pump works.

The Kansas City Chemical Co., has opened a new office at 706 E. 18th St., and added new equipment and increased the capacity of its plant.

The Kilby Locomotive & Machine Co., Anniston, Ala., has leased the plant of the Western Steel Car & Foundry Company, located in that city, it is reported, and is now operating part of it in the construction of locomotives and mine equipment.

The Pittsburg Testing Laboratory announce that they have appointed, R. T. Miller acting manager of their Chicago offices, 1330 Monadnock building, vice James A. Lister, whose connection with that company was severed on August 26.

Alonzo C. Shults has been made general Eastern sales agent of the Boss Nut Co., Chicago, with office in the Grand Central Terminal Building, New York.

The Dahlstrom Metallic Door Co., and the Crown Metal Mfg. Co., both of Jamestown, N. Y., have opened joint offices in Pittsburg, at 2435 Oliver building, under the management of Mr. L. H. Gibson.

The Indiana Steel & Iron Co., Linton, Md., has been incorporated to conduct a general iron and steel manufacturing business. The company has taken over the rolling mill at Linton and is remodeling it. Linton citizens have subscribed $10,000 toward the project.

An Illinois Central box car equipped with the Williams all-service car door made by the Williams All-Service Car Door Company, Clinton, Ill., was unloaded at the Keith elevator, Twenty-second and Halsted streets, Chicago, on Wednesday, August 2, in the presence of a number of railway and elevator representatives. Within 50 seconds of the time the car was stopped the wheat was pouring into the boot. The size of the opening in the door, however, was so large that the sink was soon overflowed and it was necessary to hold the doors partly shut to allow the hoisting apparatus to carry away the grain. It was about 10 minutes from the time the doors were open until the steam shovels were thrown in to push the unloading, but during that time the elevating machinery was working at full capacity to care for the grain delivered by gravity. The car had carried 51 tons of wheat for a long haul and had undergone considerable switching before it reached the elevator, but the doors were found to be in excellent condition.

J. W. Motherell, assistant to the vice-president of the Ashton Valve Co., Boston, Mass., has been appointed vice-president and manager of the railway department.

The Steel Car Forge Co., of Pittsburg, which for a number of years has been supplying forgings for freight car repairs to the various railroads, is now making a specialty of furnishing such items as grab irons, brake masts and sill steps, which the railroads will require in large quantities, owing to the new safety appliance standards of the Interstate Commerce Commission. A catalogue showing freight car forgings of all kinds has been issued and is a great help to the mechanical department in purchasing material of this description.

Hayes Track Appliance Co., of Richmond, Ind., has issued circular No. 64 illustrating the extensive use of Hayes Derails on the South Pacific. The circular mentions the use of Hayes derails in connection with automatic block signals on the Harriman lines and illustrates some details of practice on this system.

The Mid-Western Car Supply Co., Chicago, has been incorporated with a capital stock of $25,000 for the manufacture of railway material and supplies. The incorporators are G A. Chritton, J. G. Anderson and R. A. Raymond, all of Chicago.

The American Steel Tie Co., Salt Lake City, Utah, has been incorporated to manufacture a steel tie which is used with out spike or bolt fasteners. Capital $1,000,000. Joseph R. Murdock, President.

The Isthmian Canal Commission is receiving bids on track bolts and screw spikes.

The Morrison Frogless Switch Co. has been incorporated at Birmingham, Ala., and will manufacture a patented railroad switch. H. W. Morrison is reported to be promoting the company.

The Baltimore & Ohio has ordered from the United States Electric Co., of New York City, Gill selector telephone train dispatching outfits complete for 40 stations to be used in the extension of its telephone dispatching circuits from Clarksburg to Salem, W. Va.

The Minnesota Steel Co. has awarded the contract for two 600-ton blast furnaces to the Pennsylvania Engineering Co., of Sharon, Pa.

The Union Petroleum Co., of Philadelphia, Pa., has appointed Frank G. Payson its western representative with office in Chicago.

The Allis-Chalmers Co. announces that the Scranton plant is to be closed down permanently. The machinery will be moved to Chicago and Milwaukee.

The Hall Signal Co., which is being reorganized, has closed contracts with railroads aggregating about $125,000, it is understood, and now has unfilled orders amounting to $575,000, the largest for a number of years.

Recent Railway Mechanical Patents

BRAKE SHOE.

996,415—John J. Kinzer, Pittsburgh, Pa., assignor to Pittsburgh Brake Shoe Co., Pittsburgh.

Patented June 27, 1911.

This improved brake shoe comprises an inclosing casing 1, and a filling *a* of frictional material inserted within such casing, which is formed of a refractory material, such as asbestos or other suitable material. The object is to provide a cheap, simple and efficient form of a brake shoe in which the inclosing casing for the filling material will be unaffected by the heat between the shoe and wheel so that it will be practically heat resisting and fireproof.

CAR TRUCK.

997,395—Sherwood S. Knight, St. Louis, Mo., assignor to Scullin-Gallagher Iron & Steel Co., St. Louis.

Patented July 11, 1911.

The principal objects are to provide a car truck of comparatively simple construction combining minimum weight with maximum strength and rigidity, and to provide a single X or H-shaped casting in which the bolster and upper spring beams are combined, the ends of which casting extend beneath the side rails of the truck frame, and there bear upon the elliptic springs carried by the spring planks, and which latter are swingingly supported from the truck frame.

995,949.

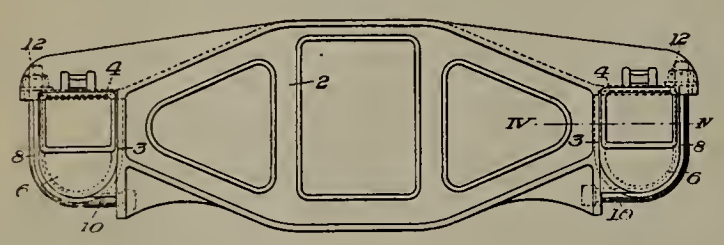

997,704.

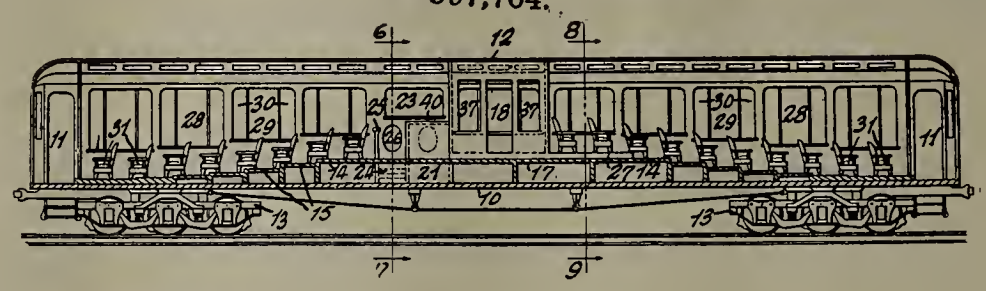

BRIDGE-VALVE MECHANISM FOR SUPPLYING LOCOMOTIVES WITH WATER.

995,584—Frank C. Anderson, Cincinnati, O., assignor to American Valve & Meter Co., Cincinnati.

Patented June 20, 1911.

A bridge over the tracks is provided with a water main and valve and spout mechanism at points where necessary to supply water to the locomotives, thus allowing the tracks to be placed as close together as possible. The water main is provided with valve mechanism to which is attached water pipes so constructed as to engage the valve mechanism and the mechanism of the drop spout of the telescope type, said drop spout mechanism being suspended therefrom and connected by a universal joint to permit the same to be swung to any angle or position desired.

TRUCK SIDE FRAME.

995,949—Albert O. Buckius, Chicago, Ill., assignor to National Malleable Castings Co., Cleveland, O.

Patented June 20, 1911.

This invention consists in providing the ends of the side frames with bearing surfaces for engaging the top and one side of each of the journal boxes, the boxes being rigidly secured to the side frames by means of strap bolts. These strap bolts engage the outer and also the lower sides of the boxes and rigidly secure them against the bearing faces on the side frames. This prevents both vertical and horizontal movement of the boxes with relation to the side frames and provides a very simple and desirable construction.

OBSERVATION CAR.

997,704—Richard Rodden, Montreal, Quebec.

Patented July 11, 1911.

This invention relates to observation cars in which the floor of the car slopes upwardly from both ends to the center thereof. The chairs may be of the revolving type so as to enable passengers to turn in any direction with great ease.. Trap doors are formed in the steps of the false floor between the seats through which baggage may be lowered into the space between the true and false floors of the car. The sides and ends of the car frame are constructed almost entirely of glass, and the windows are of the bay type so that a passenger may look forward or backward in a line practically parallel with the car.

LOCOMOTIVE.

998,321—William A. Austin, Wayne, Pa., assignor to Baldwin Locomotive Works.

Patented July 18, 1911.

In this improved construction jackets are provided around the steam pipes between the smoke box shell and the cylinders, such jackets being open into the smoke box so that the hot gases may surround the steam pipes and prevent condensation of the steam.

COMPENSATING TRUCK FOR RAILWAY CARS.

999,192—Alfred J. Kellogg, Newberg, Ore., assignor to the Kellogg Compensating Car Truck Co., Newberg, Ore.

Patented July 25, 1911.

The invention consists of three essential main features, viz: first: an individual truck section for each rail of the track, such truck section carrying a plurality of wheels, and a separate axle for each wheel, with independent journals and bearings therefor; second: a separate king bolt whereby the truck section riding upon one rail may swivel independently of that riding upon the other rail, and third, means whereby those parts of the bodies of the truck sections which carry the respective king bolts are coupled together transversely, and the whole structure so brought into operative relation with the car as to allow independent action under every condition to the wheels of each truck section in their tread and travel upon the outer and inner rails of a curve, respectively, and at the same time, when used upon straight tracks, insuring equal if not superior efficiency to that of the rigidly-coupled styles of wheels and axles and centrally-swiveling trucks now in use.

997,395.

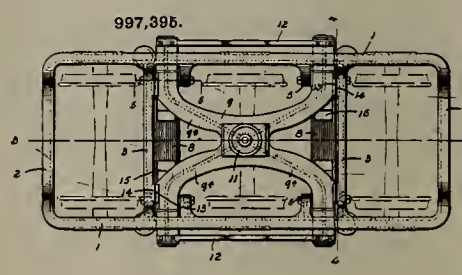

995,584.

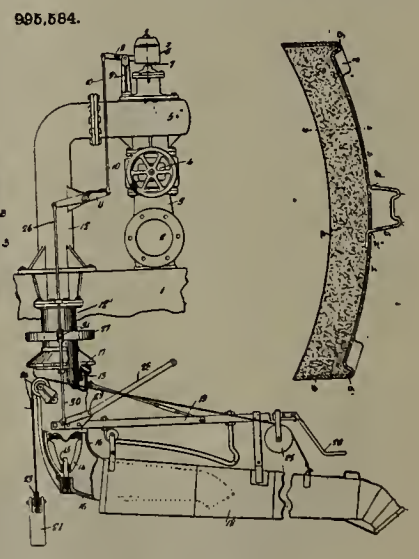

998,321

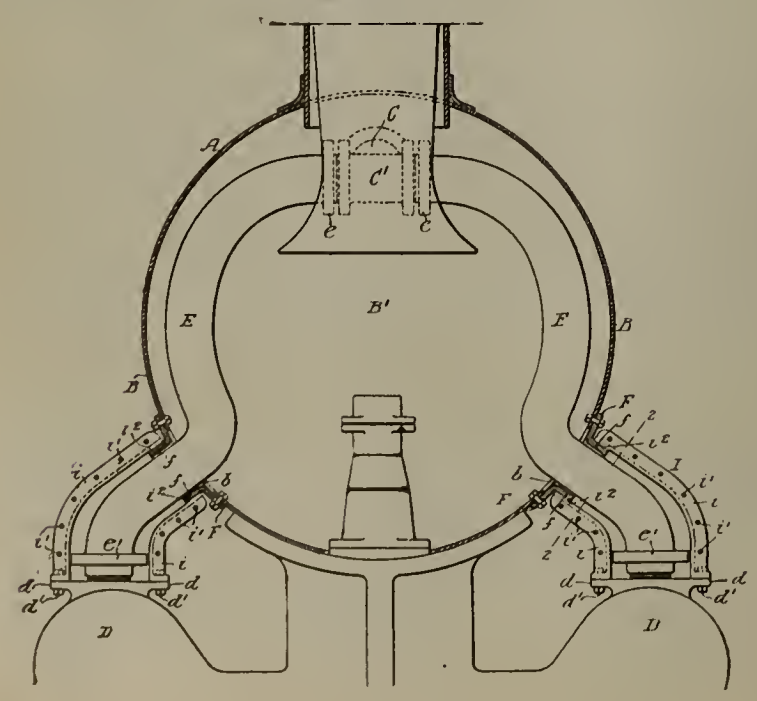

999,192.

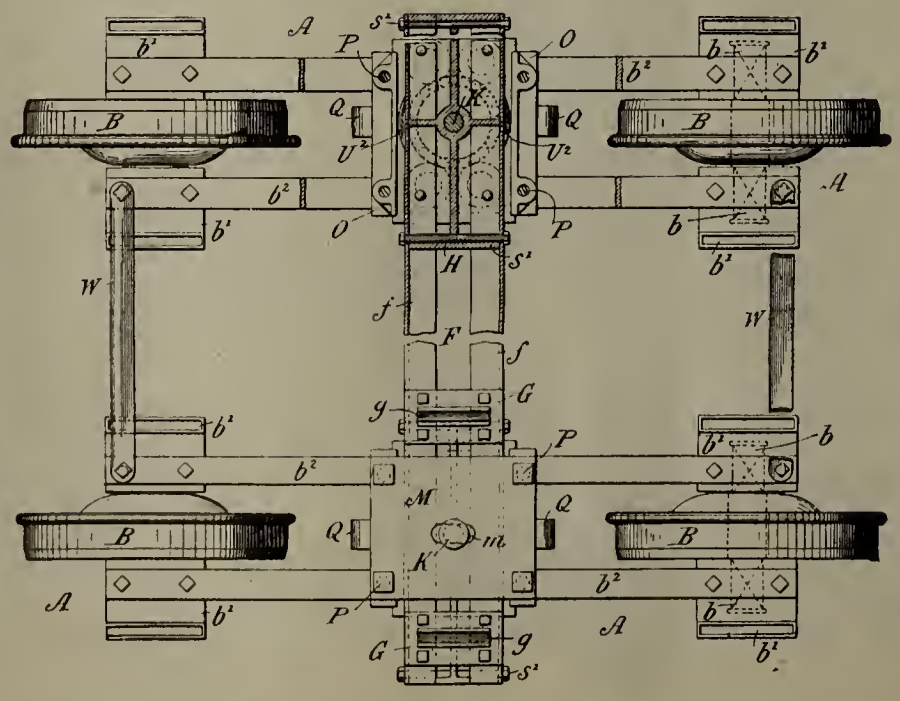

RAILWAY MASTER MECHANIC

Established 1878

Published by THE RAILWAY LIST COMPANY

WILLIAM E. MAGRAW, Pres. and Treas.

CHAS. S. MYERS, Vice-Pres. LYNDON F. WILSON, Managing Editor
C. C. ZIMMERMAN, Bus. Mgr. OWEN W. MIDDLETON, Assoc. Editor
J. M. CROWE, Mgr. Central Dist. KENNETH L. VAN AUKEN, Assoc. Editor

Office of Publication: Manhattan Building, Chicago
Telephone, Harrison 4948
Eastern Office: 50 Church Street, New York
Telephone Cortlandt 5765
Central Office: House Bldg., Pittsburg, Pa.

A Monthly Railway Journal

Devoted to the interests of railway power, car equipment, shops, machinery and supplies.
Communications on any topic suitable to our columns are solicited.
Subscription price, $2.00 a year; to foreign countries, $2.50, free of postage. Single copies, 20 cents. Advertising rates given on application to the office, by mail or in person.
In remitting, make all checks payable to The Railway List Company.
Papers should reach subscribers by the 16th of the month at the latest. Kindly notify us at once of any delay or failure to receive any issue and another copy will be very gladly sent.

Entered as Second-Class Matter June 18, 1895, at the Post Office at Chicago, Illinois, Under Act of March 3, 1879.

Vol. XXXV Chicago, October, 1911 No. 10

CONTENTS.

Editorial—
An Interstate Labor Commission 445
Selection of Staff Officers 446
Round House Facilities 446
The Coming of Cold 447
Care of Injured Persons 447
How it Happened 447
22 Stall Round House, London, Ont., C. P. Ry 448
Tests of Mallet Locomotive, Norfolk & Western Ry 452
Mallet Locomotives for the Southern Pacific Co 455
Master Car and Locomotive Painters' Assn 457
Shop Kinks 459
The Welcome Man 460
Personals 461
Among the Manufacturers 461
Industrial Notes 461
New Literature 462
New Types of Valve Gears 462
Storle Brass Globe Valve 463
Stockbridge Shaper 464
Welding Locomotive Frames 465
Twelfth Annual Convention, C. I. C. I. & C. F. Assn. of America 466
Railway Mechanical Patents 492

AN INTERSTATE LABOR COMMISSION.

When a railway decides that it is necessary to increase transportation rates in a certain district, or when it refuses for cause to reduce a rate held by shippers to be too high, the parties concerned immediately resort to the powers of the Interstate Commerce Commission which customarily issues a restraining order in the first case and deliberates for considerable periods in either case. The transportation company is unable to act until the Commission places its O. K. on the prospective action. The power of the Commission is absolute for the reason that it is governing the movements of an organization in every way responsible to the public. The success of the whole idea is hardly questionable and it rests on the solid basis of absolute power.

The railway world, and indeed the whole industrial world, is now confronted with the organizaton of labor trusts which are not responsible to the law, to its employers or to the public while they hold in their hands the power to disrupt all of the structures of the public. At present the management of a large railway system is confronted with the problem of acceding to the demands of its labor organizations or of allowing a continuance of a strike, the results of which will seriously affect the interests of the public. While the strike is not primarily one called for the purpose of forcing the payment of increased wages, it eventually means just that. A fight for the recognition of a federation is a fight for higher wages either in money or money value.

We then are "up against" this proposition. A railway *cannot* increase its own wages (rates) except with the freely obtained consent of its employers (the public). Railway employees *can* force an increase of wages for themselves by unrestricted combination without justice and without any freely given consent on the part of their employers, the railway managements. The situation is manifestly unfair and the public is the eventual victim of the unfairness.

A suggestion comes from Wm. White, president of the National Boiler Washing Co., recommending an Interstate Labor Commission organized on the plan of the present Interstate Commerce Commission for the purpose of governing the labor "trust" much as the commerce "trusts" are now governed. The difficulty at once apparent in an attempted regulation of strikes and other features incidental to organized labor is the irresponsibility of the representatives of labor. It would appear however, that the plan would be feasible if worked out somewhat along the following lines:

Endow a commission with power to supervise all labor organizations employed by corporations engaged in interstate business and to arbitrate all differences with respect to wages and conditions in the same manner as the wages of the railways (rates) are now arbitrated. In order to do this, make it compulsory for all members of the labor trust to sign bonds making the individual responsible to the law and forcing him to obey the mandates of the commission. This would not be unconstitutional because the individual would still be able to work and earn a living as an individual unbonded. As soon, however, as he joins a union he becomes part of a trust formed for the restriction of trade and his bond makes him responsible to the commission.

The result would be the open shop or the legally controlled organization and strikes would be impossible.

Everybody admits that there is something seriously wrong with the present government of labor and that the public is liable to suffer, at any time, greater injury than it ever suffered from the railway rebate evil, and the ungoverned fixing of rates by the transportation companies.

The plan is given in the merest outline with the firm conviction that it is right and, in practice, will be a means solving one phase of a dangerous and irritating question. Much thought, on the part of those competent to handle the drafting of the necessary legislation, must be given to detail before the plan could be worked out.

SELECTION OF STAFF OFFICERS.

The high motive power or engineering official is not always a technical man. Whether or not he is technically educated, however, he appreciates the necessity of technical talent in the operation of his department of railway operation. Otherwise he would not be broadminded enough for the responsibility of the position. The policy of selecting as advisers, men who are qualified to supply with their variously specialized educations that which is lacking in the brain of the head officer is the one adopted by the successful mechanical or engineering official.

Frequently in railway operation, as in other industrial pursuits, a petty officer attempts to so organize and maintain his force as to concede no knowledge superior to his own no matter how much in detail is the matter under consideration. If a man demonstrates superior abilities, due to specialization, to such an officer he is forthwith squelched and must retire if he is to retain his self respect. This kind of an organization cannot cope with problems beyond the comprehension of the single man in charge and as a result he cannot attain or, having attained, remain long in charge of a department of which large things are expected. This policy in effect is the same as that which would not allow of the use of a dictionary in any literary work. It is a short sighted attempt at preventing the other fellow from sliding into prominence and perhaps succession to the job of the superior. Needless to say this kind of an officer most often finds himself displaced on account of his drastically preventative tactics.

The broad-gauged man who, as the head of a large department, surrounds himself with a staff each member of which is qualified to offer acceptable advice with respect to certain phases of the work undertaken is the only type of officer who should properly be slated for promotion and who after promotion to the highest office is himself qualified to hold it. The surest policy for attaining real success in administrating is that which directs the obtaining of the very best talent in assistants within the limitations of the salary appropriations. The results which follow on account of individual competency in the personnel of the staff are sure to reflect credit upon the department chief who will thus prove himself too valuable a man to be displaced by one of those whose services he has engaged.

ROUND HOUSE FACILITIES.

The round-house and back shop have not in the past always received the attention and been given the consideration which their importance deserves and it is only in the most recent construction of this nature that any marked degree of attention has been given to their facilities. It is being realized, however, that an efficient round house and back shop can do a great deal towards decreasing the time which a locomotive is out of service and consequently in increasing the earnings.

It is at the round-house that the locomotive stops to eat and sleep, so the round-house force is closely in touch with actual operating conditions and can receive reports concerning defects and the nature of the repair necessary, direct from the engine men. For this reason it is essential that the back shop be in the hands of capable workmen and that it be supplied with the facilities and tools for making all manner of light repairs. Too often it is the case that the back shop has been equipped with insufficient tools and even these tools are old ones which the repair shop has cast off.

We know of round houses that were equipped entirely with old tools thrown out of the repair shop. It should be just the reverse; such tools as are located at the round house should be the very best and should be so complete as to enable all light repairs to be handled without trouble. A store room should be located at all important roundhouses and a good stock of tools and small parts should be kept on hand at all times. Defective parts and appliances should be replaced from this stock, and if necessary the defective appliances can be returned to the shop for repair. A broken air pump out of service for a few weeks is but a small loss, but the locomotive is a valuable piece of property, and each day it is idle means a certain loss on the investment. It means the loss of considerable time to take an engine to the repair shop for a light repair, complete the repair and bring it back, and if a day can be gained by making the repair at the round-house, it will do considerable towards paying for the increased expense of equipment.

Of course the equipment should be in proportion to the size and importance of the round-house. Most of the large houses now being built are equipped with drop pits, boiler washing systems, ventilating systems and many are being supplied with traveling cranes. This latter is a great aid in making quick repairs. The installation of drop pits is of course an important aid in making repairs.

Washing systems are the means of saving a great deal of energy and time, as well as of protecting the boiler against leaky flues. The ventilation of round houses is undoubtedly much better now than it has been in the past but it is a difficult problem at best and there is still room for improvement. Proper ventilation, heating and lighting are important factors in facilitating repairs, for in order to develop efficiency at the round house, the conditions under which men work must be made equal to that of the repair shop. These should include the proper lockers and toilet facilities, for attention to the comfort and conveniences of employee's will surely result in better work. Round houses and back shops provided with facilities for making repairs on all parts of the engine which are easily removable are

doing a great deal towards cutting down the operating costs, by making these repairs quicker and getting the locomotive back into service in less time.

THE COMING OF COLD.

Winter will be whistling around your ears and piling across the right of way in a few weeks. This is probably not a gladdening thought to most motive power and shop officials, carrying with it visions of dead engines, blockades, frigid machine shops and bursted pipes. But these will be largely visions with little reality if they are secure in the knowledge that engines have been carefully overhauled with reference to winter conditions, that snow curtains are repaired and in readiness, and that plows are ready for the first big storm. Superintendents of motive power and master mechanics must think for tomorrow but in order that they may do so effectively, the round-house foreman and even the road foreman of engines should get into this habit of thinking for tomorrow, by suggesting repairs and seeing to it that they do what they can to be in readiness for bad weather.

In the shop the two big winter questions are the supply of heat and light. In new shops this is not a big problem for they are usually designed along the most efficient lines with which we are familiar at the present time. But in some older shops improvements in heating and lighting conditions would be efficient improvements; that is they would pay for the outlay. It is much easier and cheaper to see during mild weather, that heating pipes, radiators and fans are in good condition than to wait until the first cold days, when repairs will be made at a disadvantage and when on account of the lack of enough heat, the efficiency of the shop will be decreased. For men cannot do their best when it becomes an effort to keep blood in circulation, particularly those at the machines who do not have to use as much muscular effort as men in some other departments. Proper ventilation in any building is necessary but it is neither conducive to health nor capacity for work, to be at a bench in front of which is a window with one or more panes missing and through which the zero winds blow with occasionally a handful of snow for good measure. Of course it will not stay that way long before some one will stick an old jacket or a piece of cardboard into it, which, of course, helps to cut down the supply of daylight.

During the short winter days when artificial lighting has to be used during two or three hours of each day, it is important that the lighting be such that the shop force can work just as effectively during this period as during the remainder of the day. It has been shown that during these short winter days, the greatest number of accidents occur and it must be concluded that work in not as efficient due to lack of good light. Each shop has its own peculiar conditions to meet but as a broad proposition we believe that a good general lighting with as few drop lights as possible is much the better method.

The Central Railway of Brazil has ordered 6 Mallet compound locomotives from the American Locomotive Co.; cylinders 20 in. and 32 in. x 26 in., diameter of driving wheels 50½ in. and total weight in working order, 280,000 lbs.

CARE OF INJURED PERSONS.

The Pennsylvania Railroad Company announces that it intends to prosecute even more vigorously its work of instructing its employes in the art of rendering "First Aid to the Injured." Lectures are to be given to employes all over the system, and the men have been notified that attendance at the lectures and the interest shown in them will be considered when they are up for promotion.

It is expected through this plan of education eventually to reach all employes who may be called upon to give first aid. Official records show that in 1908, 1909 and 1910, exactly 15,667 men received instruction on this subject.

In order to make this educational work as valuable as possible to the community, officers of the company have decided to invite to the lectures in the various cities, towns and boroughs where they are given the local firemen and policemen, men reliable at any time to be called on to utilize such instruction.

Lectures are given by the medical examiners of the Relief department. Employes are taught how to place injured persons on stretchers and how to carry the injured. They likewise receive instructions for taking primary care of wounds, fractures, burns, and shocks, without the use of drugs, until competent medical aid can be obtained. They are also instructed in the emergency treatment of pain, unconsciousness, convulsions, effects of heat and cold, and resuscitation from electric shock. The lectures are simple, and can be comprehended by any intelligent layman.

HOW IT HAPPENED.

We read in history that the original form of producing fire was by rubbing two sticks of wood together until the resulting friction caused the sticks to ignite. No doubt many have watched an old German light his pipe with flint and steel. Only a short time ago matches were thought to be the best things with which to start a fire—but now comes the most wonderful of all, a piece of ice, a little straw and sawdust, a piece of tin to do the expanding and contracting and, presto! just a short time in the sun and we have a beautiful fire.

No need of matches or cigar stubs carelessly left lying around; no hand rubbing of sticks; no flint to bother with. Just have a piece of ice in your pocket, a little sawdust (tobacco will do the same), and a piece of tin. Load your pipe with these ingredients and get out where the sun can shine upon it, drawing gently the while to create a partial vacuum, and flash will go the ice, forming steam which will condense and be drawn into the mouth, causing the bowl and pipe to contract; the resulting friction will cause the piece of tin upon the bowl to ignite the contents, and, behold, we smoke.

Lest some of the readers question this method and prophesied results, attention is called to the following which appeared in a Michigan newspaper:

"Vicksburg, Mich., July 6.—Fire at 1 o'clock this afternoon completely destroyed the ice house of John Gorschalk on the west side of Sunset Lake and an ice famine will ensue as the result.

"The sun's rays beating upon the tin roof of the house are believed to be responsible for the fire. The heat melting the ice and turning it into steam expanded the sides of the house. A vacuum was then caused by the condensation of the steam, which caused the walls to contract. The alternate expanding and contraction produced further heat from friction, which ignited the straw and sawdust with which the ice was packed."

And that's how it happened.

Kalamazoo, Mich. E. L. Ide.

—*The National Engineer.*

The Texas State is in the market for one locomotive.

The Buffalo, Rochester & Pittsburg is in the market for 15 locomotives.

22 Stall Engine House, London, Ont., C. P. Ry.

By J. W. Orrock, Chief Draftsman and Assistant Engineer.

There is being completed for the Canadian Pacific Railway a 22-stall engine house at London, Ont., including an annex, which provides a machine shop and boiler house, with office and other facilities for the locomotive foreman. The house is divided into two portions of eleven stalls each by a fire wall in the center and is 85 feet deep, each stall measuring 25 feet 8½ inches between centers of pilasters in the rear and 13 feet 7 inches between centers of columns in front.

It will be noted on one of the drawings that the three bays in front of the machine shop, where the truck wheel and drop pits are located, are 95 feet deep, the rear portion of the bay being taken up by the boiler washout plant, built and installed by the National Boiler Washing Co., Ltd., Montreal, Que.

The machine and boiler room is divided by a concrete fire wall having a communicating fire door. The boiler room is about 34 feet by 50 feet and will accommodate three 100-h. p. locomotive type stationary boilers, connecting with an independent chimney 11 feet 6 inches at the base and 100 feet high.

Machine Shop.

The machine shop, with offices, is about 60 feet by 50 feet and provides a large lavatory, locomotive foreman and clerks' offices and a registry room or booking office.

The construction of the house is plainly shown on the cross-sections and consists of concrete foundations and walls with a steel frame encased in concrete and a mill construction roof. The cost of a steel frame encased in concrete is about the same as reinforced concrete, and in some cases the contractor has the option. The steel frames, however, can be erected and the house roofed over very rapidly, which is an advantage.

Standard Engine House.

This type of house was adopted by the Canadian Pacific Railway after some experience with all concrete and steel constructions, and has been entirely satisfactory. It is reasonable in first cost and is practically fireproof. Generally speaking the cost of this type of house complete ranges from $2,800.00 to $3,300.00 per stall, depending on location and local conditions. This price does not include the boiler washout plant which is really not part of the house, but rather a portion of the equipment.

The doors are solid without lights, with large transom lights over; in the rear all the space available is used for the windows. The roof is covered with a tar and gravel built up roof, flashed up 12 inches on the firewalls and over and under all eaves. There are no water troughs or conductors. All of the water falls to the rear, and a slight extra slope is given the back portion to prevent ice accumulating immediately over the wall portion, as it is very likely to do from alternate thawing and freezing when the slope is too little to cause a run off under these conditions.

Pits.

The engine pits are 4 feet wide and 65 feet long, 2 feet 4 ins. deep at the rear end, and 2 feet 10 ins. at the front. The walls are of concrete 17 inches thick with footings 18 inches thick and

Framing of Round House, London, Ont.

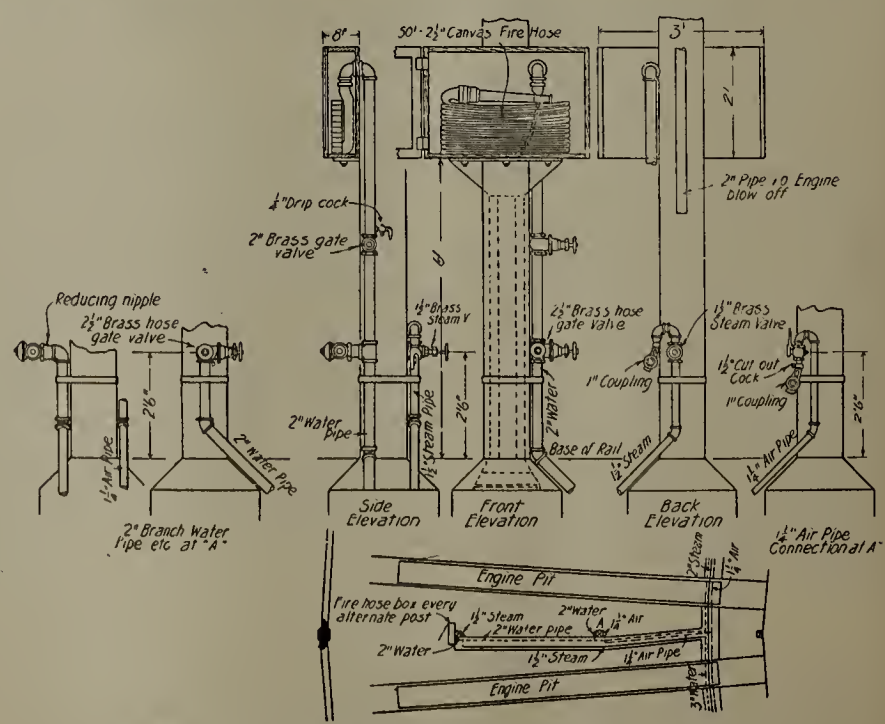

Connections for Steam Heat, Air, Water and Fire Service, C. P. Ry. Standard Round House.

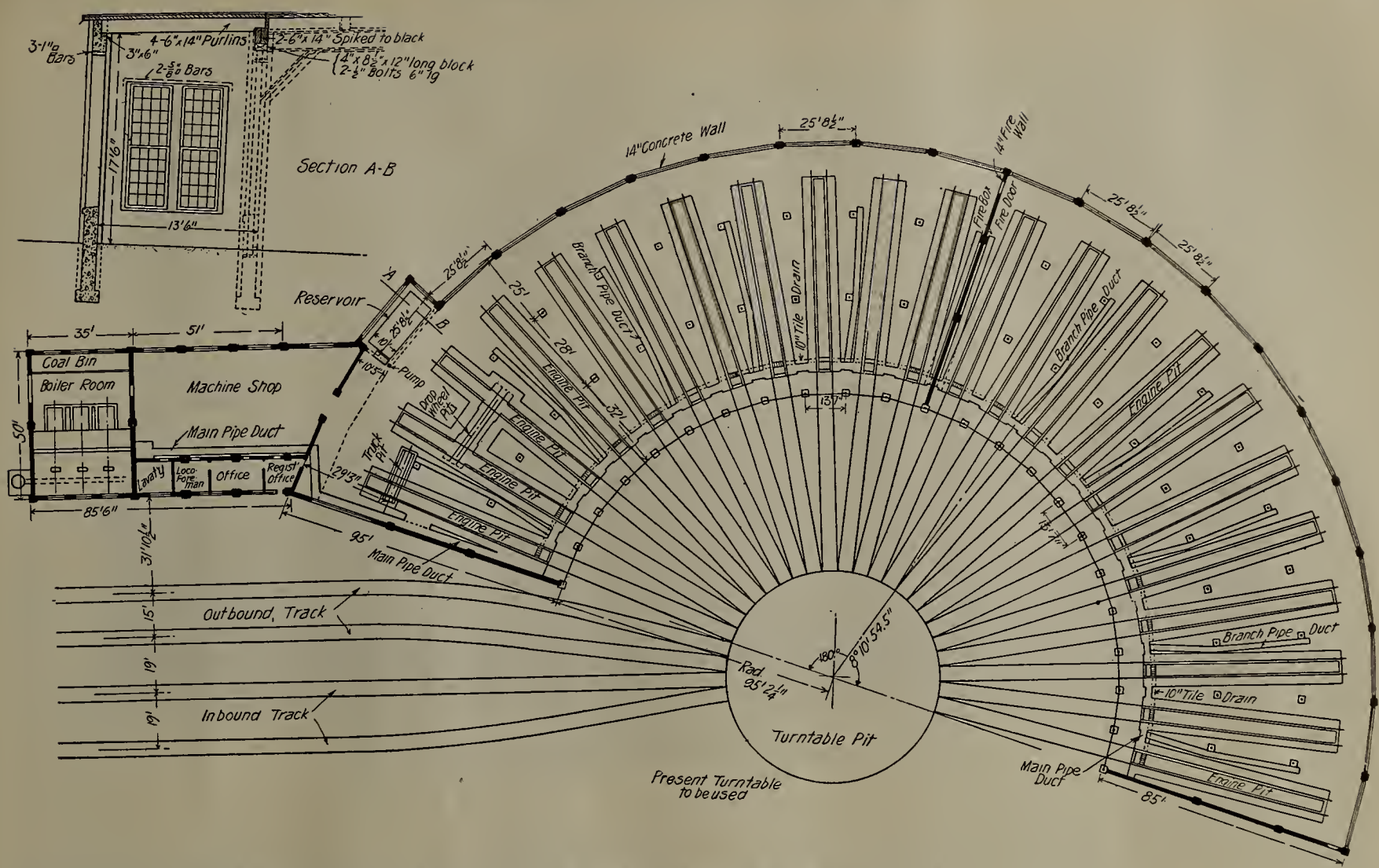

General Layout 22-Stall Round House, Machine Shop and Boiler House, C. P. Ry., London, Ont.

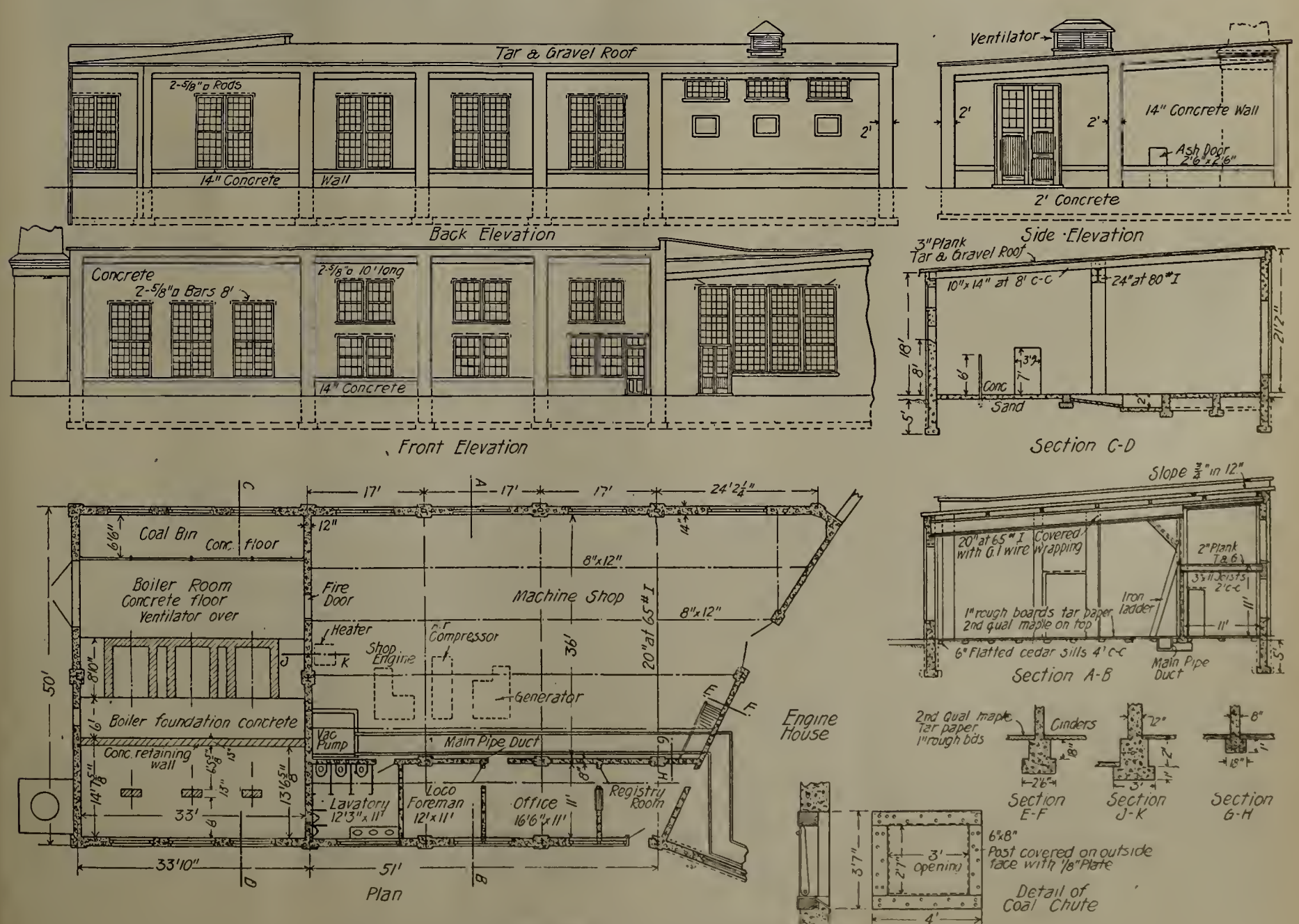

Boiler House and Machine Shop, London, Ont., C. P. Ry.

2 feet wide. The floor of pits is of vitrified brick on a sand bed.

The truck and drop wheel pits are of similar construction, excepting the floors, which are of concrete, the drop wheel pit being arranged to accommodate the telescopic lifting jack, is only 6 feet deep, and is spanned with a rail, and truss bar beam easy to remove and replace; the plank supporting the bearings should be of hardwood.

The beam spanning the opening over the track wheel pit consists of a double rail, riveted base to base, the lower rail being cut off so as to give 2 in. clearance on either side of the opening; the rail bridge lock for keeping the rails in line is one of some pits. The trolley track to the machine which connects with the cross trolley track is not to be installed at present.

Piping.

The steam, air, water, and other pipes are conveyed in concrete surface ducts, which run between and connect at each engine pit along the front of the house with branch ducts taken off and extending towards the rear of the house at each alternate bay. The steam supply is a 3 inch main and 1½ inch branches, the water main 3 inches with 2 inch branches, and the air line throughout is 1¼ inch pipe all connected up and terminating with the fixtures installed.

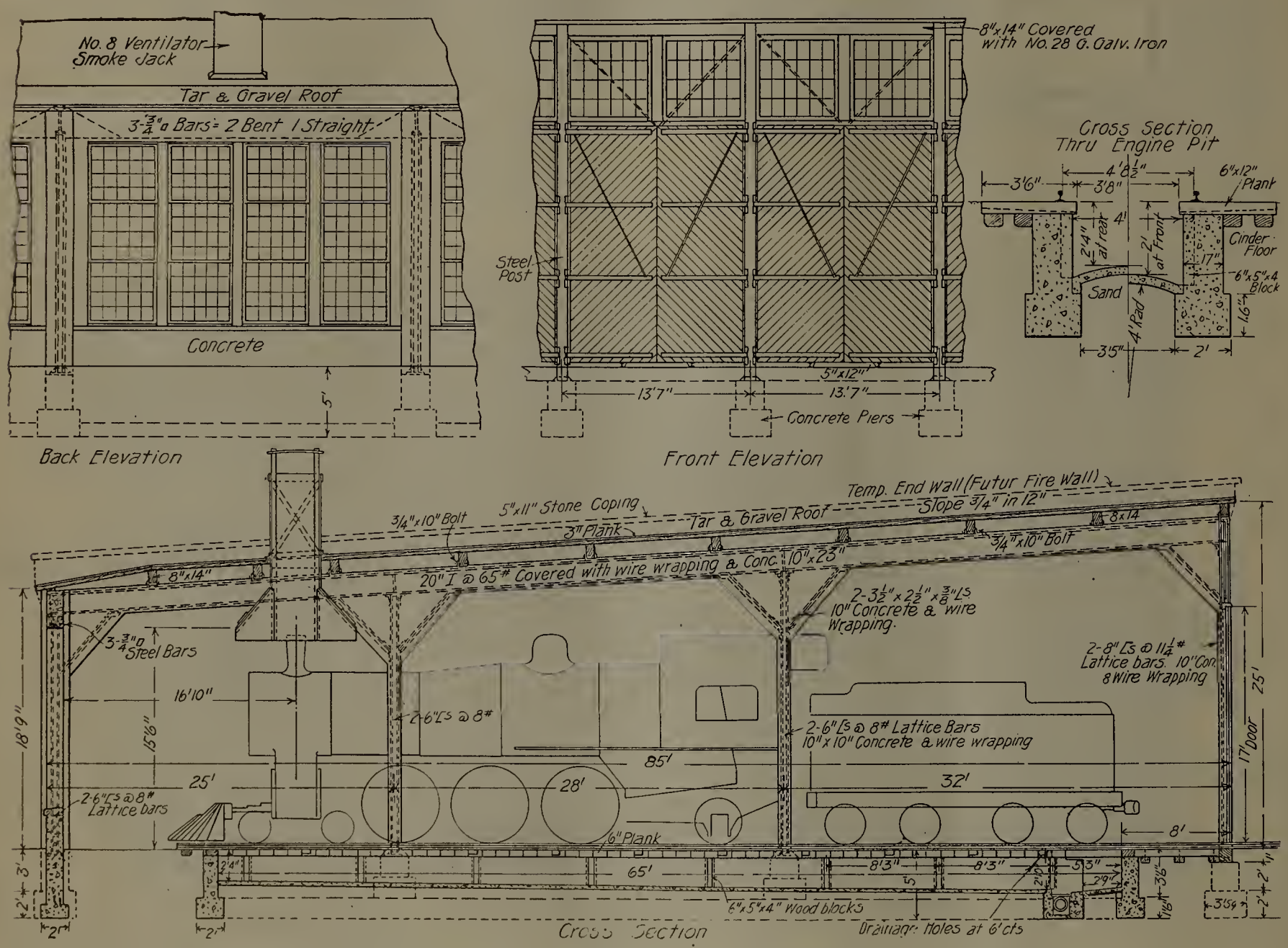

Details, Elevation and Section, Standard Round House, C. P. Ry.

locomotive foreman's wrinkles and is very efficient for the purpose.

The floor of the engine house is made up of cinders until the ground is rendered fit for a more permanent type. Under each rail, however, at each engine pit, a strip of flooring 3 feet 6 inches wide and 6 inches thick is inserted, supported on the one side by the engine pit wells, and the other by 6 inch flatted cedar sills.

At the six pits to be used for washout purposes, the floor is finished in concrete granolithic finish, dished to drain away from the pits towards the posts, with trap and drain pipes arranged to take the waste water back to the engine pits. Over each engine pit at the rear of the house, a trolley track arrangement is installed for handling piston rods, cylinder heads, etc., not exceeding 1,000 lbs. in weight, and consists of an inverted U track at 7 ft. 2 ins. centres, in which are provided eight wheel carriers to transfer the load longitudinally; and movable cross trolleys to take it laterally. The movable cross trolleys, however, are only provided over the drop and truck wheel

Heating.

The house is heated by direct radiation, low pressure vacuum system, and consists of five 2 inch coils on both sides and one end of each pipe including the truck wheel and drop pits. The balance of radiation is obtained by placing coils on the rear and side walls. The amount of radiation is about one and a quarter square feet per 100 cubic feet of enclosed space, which gives an inside temperature of 50 degrees F. when it is ten degrees below zero outside. The heating system was installed by the National Boiler Washing Co., Ltd., of Montreal.

Boiler Washing System.

A boiler washout plant, as mentioned above, is being installed and consists of a six stall installation comprising a combined washout and filling water rseervoir, 12,000 gallons capacity, fully equipped, with condenser, filtering, separating, and sludge tanks, including duplex pumps, etc. In the engine house, six pits are equipped with blow out line with drop pipes at every other post and terminating with suitable gate valves, also a pipe line that may be used for either washing or filling purposes, with drop

22-Stall Engine House and Machine Shop, London, Ont.

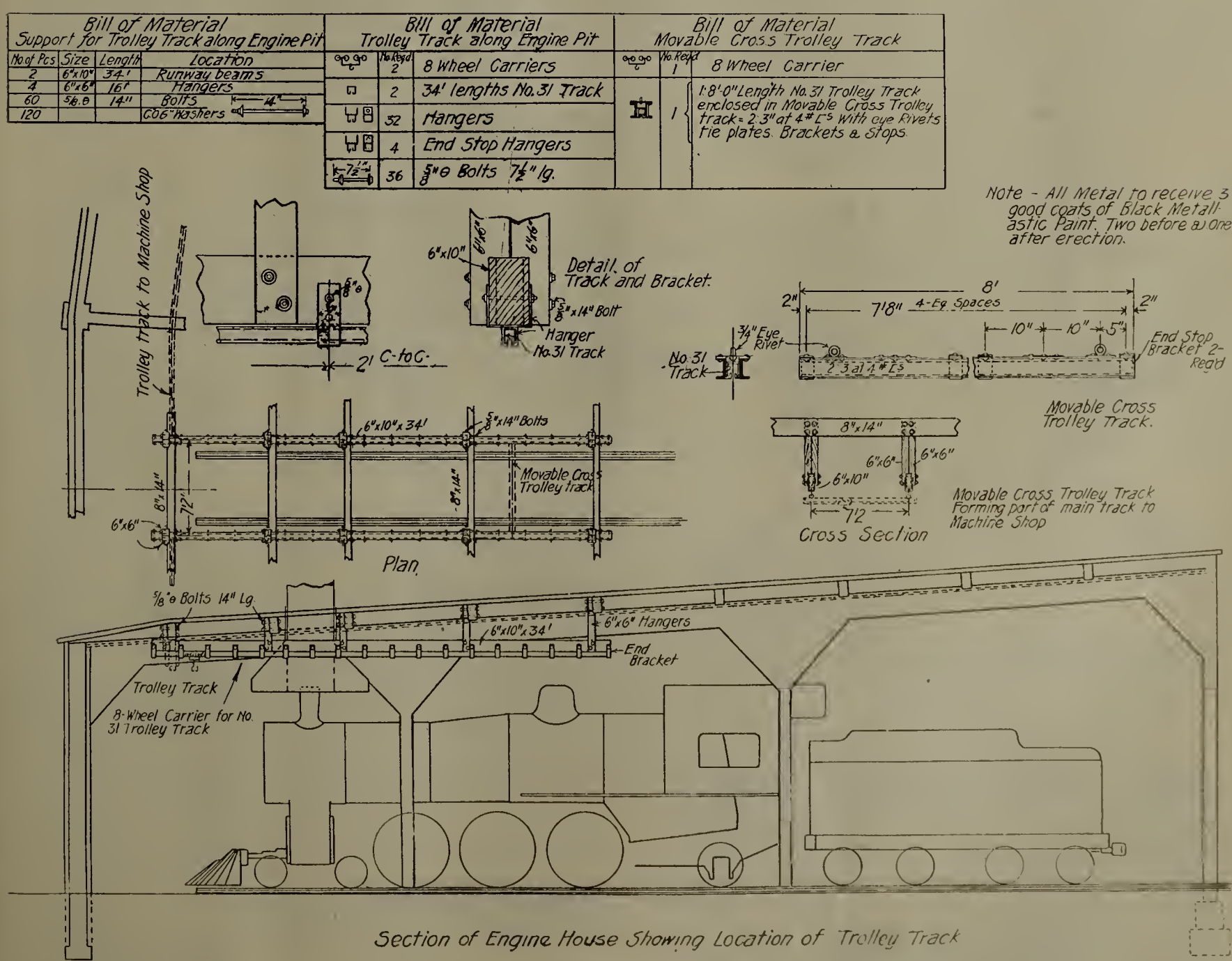

Standard No. 4 Engine House, C. P. Ry.

pipes and valves at every other post. With this system, the heat units (including the water) blown out of the locomotive boilers will be saved, the blown out steam being used to heat a fresh body of water for filling the boilers, the blown out water being used for boiler washing purposes.

Smoke Jacks.

The Gutelius patent asbestos smoke jacks are used, built of ⅜-in. asbestos material. The arrangement provides a smoke hood 8 ft. 9 in. by 3 ft. 0 in. wide with a ventilating smoke jack 3 ft. 6 in. square on the outside. It will be noted at the points marked "A" on the side elevation and plan that the inside and outside sheets overlap, leaving a 3 inch space between, so that any smoke escaping the hood goes up the Jack through these openings.

General.

Messrs. J. Hayman & Sons, London, are the building contractors; Messrs. Byers & Anglin, contractors, Montreal, built the power house chimney, and the National Boiler Washing Co. has the contract for the heating and boiler washout plant.

A. L. Hertzberg, division engineer, and F. W. Cooper, resident engineer, have charge of the construction work, under the supervision of Mr. J. M. R. Fairbairn, acting assistant chief engineer, Canadian Pacific Ry.

It is stated that the following preparation will keep machinery clean for months under ordinary circumstances, as, for instance, in a show room: One ounce of camphor, dissolve it in 1 lb. of melted lard, and add enough plumbago powder to make the mixture the color of iron. Clean the machinery, and smear it with the mixture. After it has stood for 24 hours rub the work clean with a soft linen cloth.

TESTS OF MALLET LOCOMOTIVE, NORFOLK & WESTERN RY.

Mallet locomotives have saved "double heading" freight trains on the Norfolk & Western Railway on a division where the maximum grades are 2 per cent. One Mallet hauls a train of 1,180 tons that formerly required a class M-1 twelve-wheel and a class W consolidation locomotive working together. Furthermore, it does this with 36 per cent. less fuel.

Tests have recently been made by the officials of the railway and of the American Locomotive Co., builders of the Mallets in use.

In making these tests the purpose of the Norfolk & Western Railway was to determine the efficiency of the Mallet locomotive for the service for which they were intended as compared with the twelve-wheel type then used. The locomotives tested were No. 993 of the Mallet type, and No. 1,124 of the class M-2 twelve-wheel type, the heaviest design of this type on the road. This latter has a total weight of 260,000 pounds, 220,000 pounds on driving wheels and a maximum tractive power of 52,457 pounds. The tests were made on the division between Roanoke and Christiansburg, a distance of 29½ miles. As will be seen from the profile shown, the first 17½ miles is undulating and the remaining twelve a continuous mountain grade averaging about 1.32 per cent.

Dynamometer car No. 5 was borrowed from the Westinghouse Air Brake Company, and exhaustive tests were made in accordance with most careful and accurate methods. Six trips were run with each locomotive under conditions as nearly identical as possible.

The general performance of the class M 2 engine has been tabulated; and a comparison with that of the articulated locomotives is given in the table.

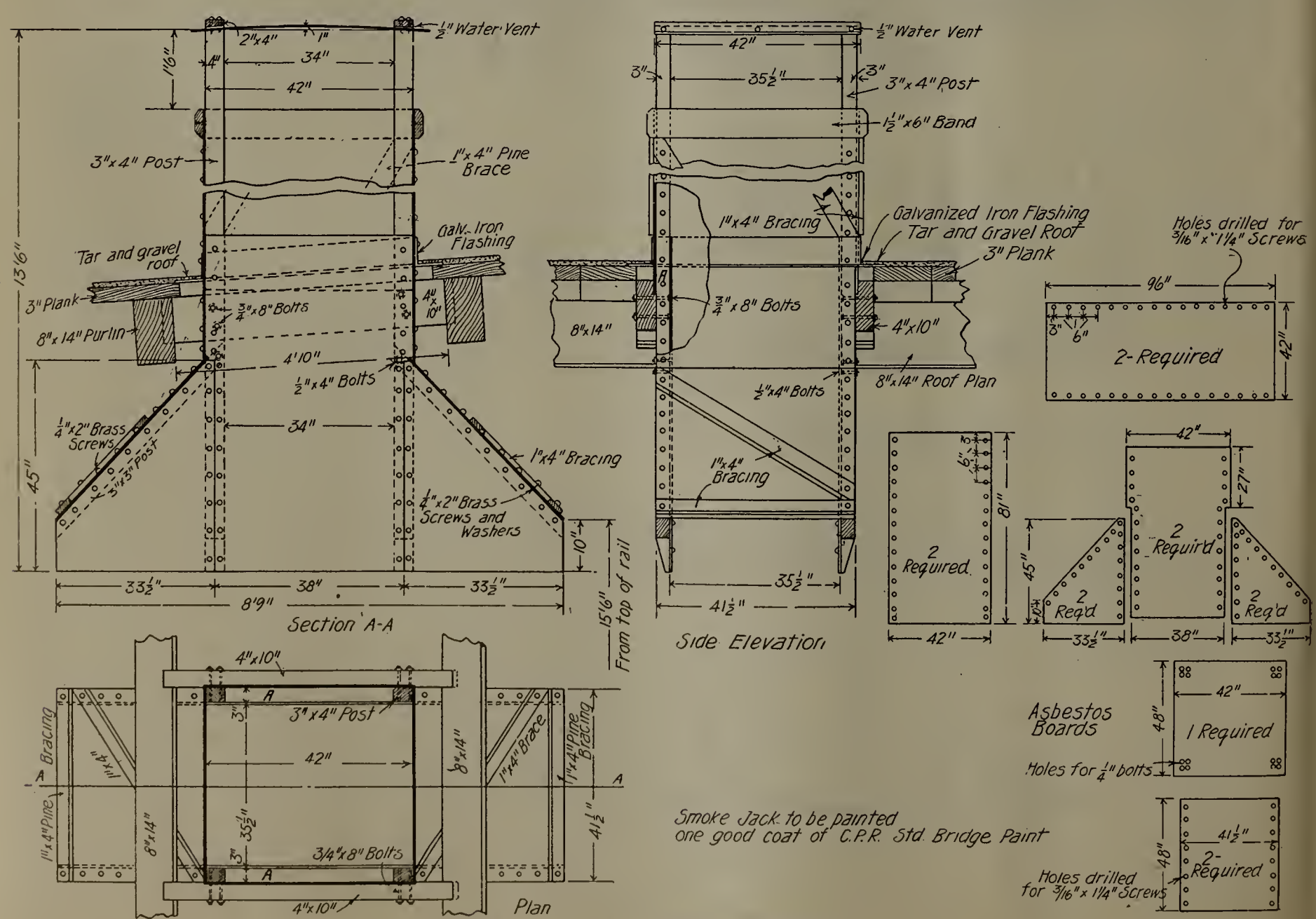

Standard Ventilated Asbestos Smoke Jack, C. P. Ry.

In commenting upon the relative performance of the two classes, the report to the Superntendent of Motive Power says:

"Referring to the average results as given for the two engines above, it is strikingly singular how closely these two results compare for time and speed items, there being practically no difference upon this comparison. It is noted, though, that the Mallet engine No. 993 pulled 50 per cent. more cars with an increase of 44.3 per cent. tonnage over the twelve-wheel engine No. 1,124. The coal consumption per 1,000 ton-miles is also favorable to the Mallet engine, there being a difference of 36 per cent. less per 1,000 ton-miles than that consumed by the twelve-wheel engine No. 1,124."

Following is a summary of the average results obtained in the test of the Mallet locomotive. On careful study, the results shown in this table indicate a design well adapted to the conditions under which the locomotive was operated and for which it was designed; namely, comparatively slow speed, drag service. Some of the figures are particularly impressive, especially those relating to the boiler performance:

Boiler pressure, pounds per sq. in.	193.2
Water supplied boiler, pounds	97,682.0
Coal, total pounds	12,467.0
Ratio total water to total coal	7.83
Equivalent evaporation per sq. ft. heating surface per hour.	9.70
Equivalent evaporation per pound of coal	9.49
Coal per sq. ft. of grate area per hour	72.40
Moisture in steam, high pressure (per cent)	.83
Moisture in steam, low pressure (per cent.)	2.02
Temperature of escaping gases, degrees F.	514.2
Drop in steam pressure between high and low pressure cylinders (left side)	4.9
Boiler horse-power	1,515.0
Boiler efficiency (per cent.)	64.9
Distance of run, miles	29.7
Number of cars in train	22.5
Tonnage of train (behind tender)	1,511.6
Speed, miles per hour	13.12
Pounds of coal per 1,000 ton-miles, excluding delays and weight of engine and tender	273.7
Indicated horse-power	1,604.3
Draw-bar horse-power	1,347.0
Per cent. of D. H. P. to I. H. P.	83.9

In making the tests, the most careful methods were used, to insure the greatest accuracy in the observations taken.

The coal was sacked, 100 pounds to the sack, and delivered to the fireman according to his requirements. It was endeavored not only to have a clean, uniform fire at the beginning of each trip, but also to burn the fire down to approximately the same condition at the end of each trip. Separate account was taken of the coal used during delays.

A carefully calibrated tank was used, and the water measurements taken in such a way that the amount of water at

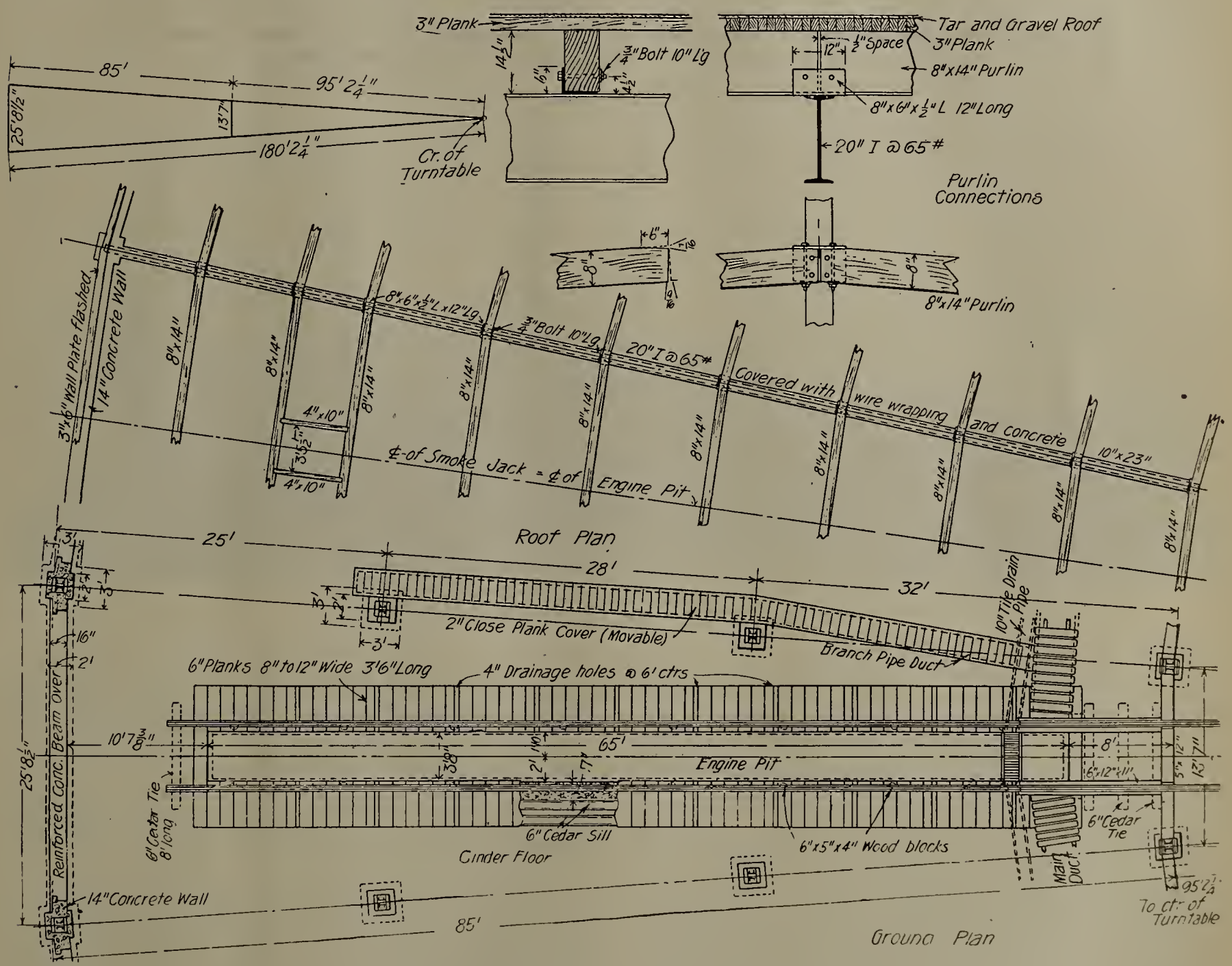

Details of Standard No. 4 Round House, C. P. Ry.

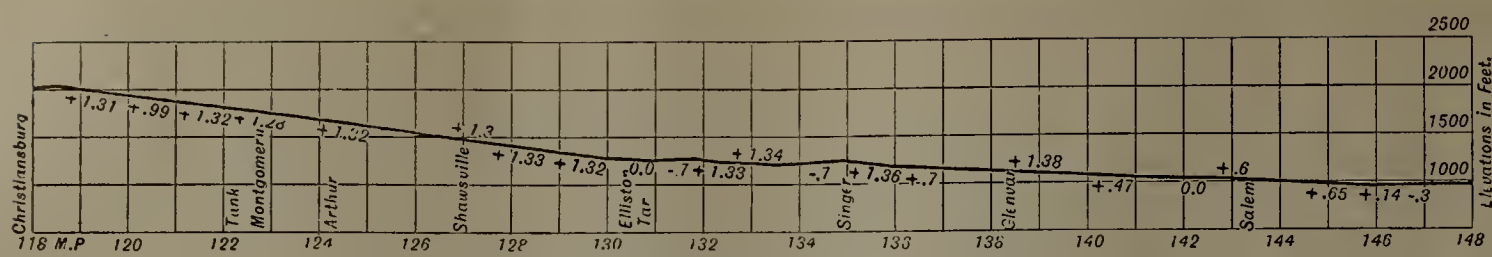

PROFILE OF NORFOLK & WESTERN, BETWEEN ROANOKE & CHRISTIANSBURG

COMPARISON OF GENERAL PERFORMANCE OF NORFOLK & WESTERN CLASS X-I MALLET AND CLASS M-2 TWELVE-WHEEL LOCOMOTIVES

Run No.	Total Time Hours	Delay Hours	Running Time Hours	Running Speed M. P. H.	Distance Run Miles	Tonnage Behind Tender	No. of Cars	1000 Ton-Miles, Excluding Eng. and Tender	Coal per 1000 Ton-Miles, Excluding Eng. & Tender	Boiler Press lbs. per sq. in.
Class M-2 Twelve-Wheel Locomotive No. 1124										
1	2.43	.24	2.19	13.5	29.59	1046.9	15	30.98	384.1	191.2
2	3.04	.79	2.25	13.2	29.70	1046.9	15	31.09	418.2	194.6
3	2.75	.72	2.03	14.5	29.42	1046.9	15	30.80	441.6	192.1
4	4.50	1.90	2.60	11.4	29.56	1046.9	15	30.95	436.2	188.2
7	3.20	.68	2.52	11.7	29.46	1046.9	15	30.84	441.0	190.2
8	3.08	.94	2.14	13.8	29.55	1046.9	15	30.93	446.2	196.4
Avg.	3.16	.88	2.28	13.0	29.54	1046.9	15	30.93	427.9	192.1
Class X-I Mallet Locomotive No. 993										
1	2.873	.690	2.093	14.2	29.75	1364.3	20	40.601	275.9	182.0
2	3.334	.935	2.399	12.4	29.75	1541.1	23	45.847	279.2	193.8
3	3.264	1.035	2.229	13.3	29.74	1541.1	23	45.832	279.3	201.9
4	3.102	.930	2.172	13.7	29.76	1541.1	23	45.863	274.7	195.7
5	3.248	.797	2.451	12.1	29.52	1541.1	23	45.555	272.2	188.1
6	3.146	.893	2.253	13.3	29.87	1541.1	23	46.032	260.7	196.6
Avg.	3.146	.88	2.266	13.12	29.74	1511.6	22.5	44.955	273.7	193.2
Per cent. in favor of 0880 type engine No. 993						44.3	50	45.3	36	

all four corners of the tank was accurately determined. Measurements were taken at the beginning and end of each test and before and after taking water en route. The initial and final water observations were made with the engine standing on the same track elevation. Before the final tank measurements were taken at the end of each run, the boiler was filled to the same level as it had before the run was begun, the point having been marked on the gauge.

The injector over-flow was collected and measured. Steam condensed by the air pumps and also that lost through the calorimeters was noted and the necessary corrections made.

Loss through the pops was determined by drilling and tapping the pop casings and applying plugs with a 1/16 in. orifice screwed in flush with the inside of the casing. These plugs were then connected to a pipe line running back to a condensing coil in the tank. A small per cent. of the steam discharged through the pops passed through these orifices and was condensed and collected in a small tank arranged for this purpose. With the engine stationary and the boiler full of water, the engine was fired to keep the pops open until the water in the boiler receded to the bottom of the gauge glass. The boiler was then filled to the original point. The tank being calibrated, the amount of water required to fill the boiler, which corresponded to the amount discharged through the pops, was determined. The ratio of the water discharged through the pops to the water collected from the condenser gave the desired percentage for determining the loss through the pops on each trip.

The steam pressure determinations were indicated by ordinary steam gauges, these being carefully and repeatedly tested to insure their accuracy. This course was also followed with the steam gauges used in connection with the calorimeters. A marine type barometer which was mounted in the dynamometer car gave the atmospheric pressure.

The draft in the smoke box and fire box was measured by open water manometer tubes.

Peabody throttling calorimeters were used to determine the quality of steam which was tested both in the high pressure delivery pipe and the steam chest of the low pressure cylinders.

The reverse bar quadrant was stenciled, counting the notches from the center. In measuring the throttle opening, the dome cap was removed and the valve stem in the cab marked in increments of 1/16 open. The throttle was securely adjusted to increments of 1/8 open and the necessary points located on the throttle stem. The positions of the reverse bar and the throttle were registered on the dynamometer chart by operating push buttons in the locomotive cab.

Crosby steam indicators were located on each of the four cylinders to determine the indicated horse-power.

In addition to the draw bar pull, the dynamometer chart contained, as usual, records of the reverse bar position, throttle opening, time, distance traveled, location of stations, mile posts, points where indicator diagrams were taken and portion of the road covered while observations were being made.

The definite point where indicator diagrams were taken and the definite draw bar performance at the time they were taken was thus known.

Steam pressure, drafts, calorimeter readings and escaping gas temperatures were taken at five-minute intervals.

The records of the tests are published by courtesy Mr. W. H. Lewis, superintendent of motive power of the Norfolk and Western Railway.

Mallet Locomotives for the Southern Pacific Co.

The Southern Pacific Company has recently received from The Baldwin Locomotive Works, twelve Mallet articulated compound locomotives which will be used in passenger service on the Sacramento Division of the Central Pacific R. R. On this line, eastbound, there is a continuous ascending grade from Sacramento to Summit, a distance of 105 miles. The total rise is 7,000 feet, and the maximum grade is 116 feet per mile for about 40 miles. Since 1907, passenger service on this division has been handled by ten-wheel locomotives built to Associated Lines standards, and weighing 203,000 pounds, with 160,000 pounds on driving-wheels. The tractive force exerted by one of these locomotives is 34,700 pounds, and two engines are required to handle a 500-ton train on the 116 foot grade. Each of the new Mallet locomotives is equivalent, in capacity, to two of the older engines, and under ordinary conditions double heading of passenger trains will thus be avoided in the future.

The design of the new locomotives generally follows that of the Mallet freight locomotives with 2-8-8-2 wheel arrangement, which have been in successful use on this division since 1909. A number of modifications have been introduced, however, and these include some features which are new to the practice of the builders.

The boilers of the new Mallet engines are of the separable type, as usually applied by the builders to locomotives of this capacity. In the present instance the dome is placed a short distance ahead of the fire-box, and an internal dry pipe conveys the steam to the intermediate combustion chamber. This chamber contains right and left hand steam pipes of ordinary construction, and these communicate with short horizontal pipes, which lead to the high pressure steam chests. The high pressure exhaust is conveyed to the smoke-box through a horizontal pipe located in a large flue which traverses the water heater. This pipe communicates with a cast iron elbow pipe at each end. The elbow in the combustion chamber is in the form of an inverted Y, one branch of which leads to each high pressure cylinder. The flexible receiver pipe is placed on an angle, under the smoke-box.

The injector piping is arranged so that the feed-water enters the heater on the bottom center line and leaves it on the top center. The water therefore circulates through the entire heater. The hot water enters the boiler proper on both sides, at a distance of 35 in. from the front tube sheet. Check valves are placed at both the heater and boiler inlets.

The steam distribution to all cylinders is controlled by inside admission piston valves, which are of the built-up type 15 inches in diameter. The valves are operated by Walschaerts gear, and are set with a lead of 5/16 in. The exhaust clearance of the high pressure valves is ¼ in. and of the low pressure ⅜ in. No by-pass valves are used, but a large relief valve is tapped into the steam pipe leading to each cylinder. The low pressure pistons have extension rods, and these are supported at their outer ends, on crossheads. The guides for these crossheads are supported by the cylinder heads and cast steel bumper beam. The crossheads have cast steel bodies and bronze gibs, and bear on the tops of the guides only.

The method of securing the high pressure cylinders to the frames and saddle is worthy of notice. Interposed between each cylinder and the saddle is a slab frame, 26 inches deep and 2½ in. wide. This slab is spliced to the main frame by 21 bolts each 1¼ in. in diameter, and by two vertical keys driven in a parallel key-way with their tappered faces in contact. The same plan is used for keying the frames to the cylinders and saddle. The saddle itself is of cast steel and is composed of two sections. The lower section extends the full depth of the slab frames, and supports the hinge pin, which is 7 in. in diameter. With this arrangement the separate crosstie heretofore used to support the lower end of the king pin is combined with the saddle casting, and the cylinders, frames and saddle are bolted and keyed together to form an exceedingly strong and rigid structure. The low pressure cylinders are bolted directly to a steel box-casting which is secured to the frames in accordance with the well-known practice of the builders.

Mallet Articulated Locomotive, Southern Pacific Co.

This engine is similar to the Mallet freight locomotives operating on the Central Pacific, in that it is designed to run fire-box end first, in order to give the enginemen an unobstructed view of the track. The truck under the fire-box therefore becomes the leading truck. This truck is of the Hodges type, with spring links so jointed as to allow a fore-and-aft as well as lateral motion. A new design of centering device is applied to this truck. A double coil centering spring is used, and it is held in a vertical position, between two cast steel washers, and is guided by a vertical thrust bar. This thrust bar is placed on the center line of the locomotive and is suspended from a crosstie. Interposed between the top spring washer and the crosstie is a bearing plate. Two pins, each 2 in. in diameter, are placed between the bearing plate and the crosstie, and on these pins is suspended a U-shaped strap, which is wide enough to embrace the spring washers. A link connects the lower end of the strap with a lug which is bolted to the truck frame. When the frame is displaced from its middle position, the strap is pulled to one side, and one of the upper pins is drawn down, thus pushing on the bearing plate and throwing the spring into compression. The bottom spring washer is held in place by a link which is pinned to the engine frame.

These locomotives are equipped for oil-burning, and the tenders are coupled at the smoke-box end. The two tanks are semi-cylindrical in shape, and are placed end to end. They have respective capacities for 3,200 gallons of oil and

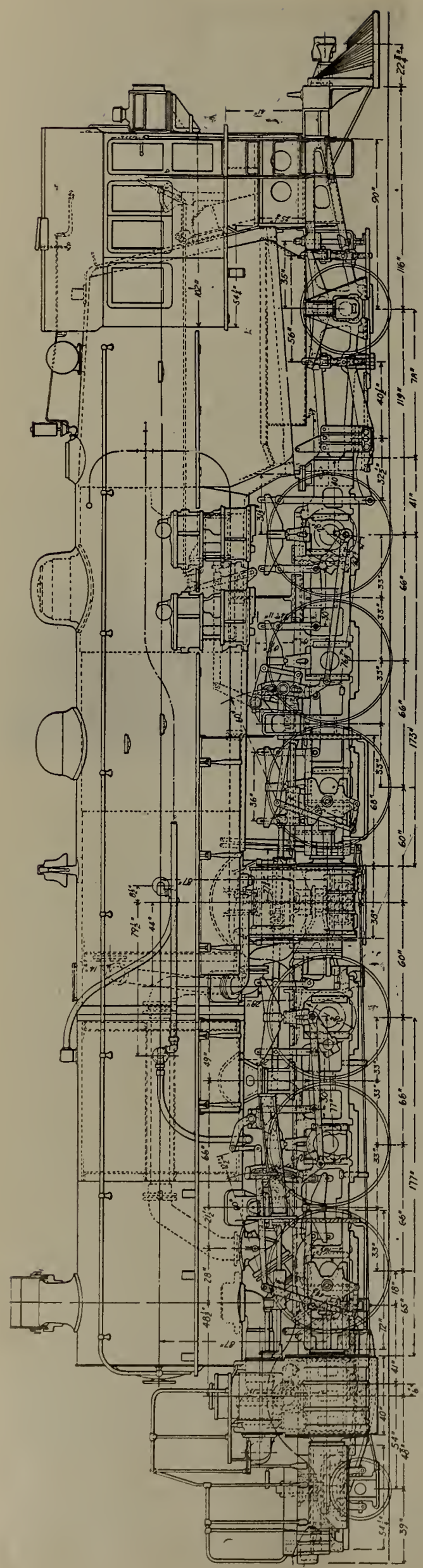

Side Elevation, Mallet Articulated Locomotive for the Southern Pacific Co.

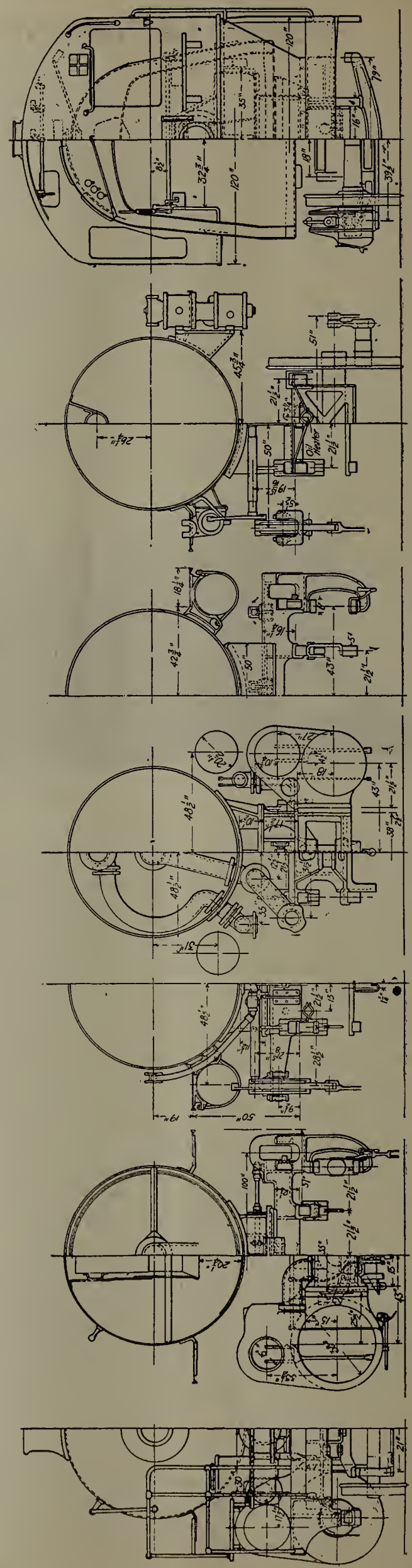

Cross Section, Southern Pacific Co. Mallet.

10,000 gallons of water. The tender frame is composed of 12-inch channels weighing 40 pounds per foot, and strongly braced transversely; while the end bumpers are of cast steel. The tender trucks, and also the back engine truck, are equipped with "Standard" forged and rolled steel wheels.

In designing these locomotives, full advantage has been taken of the experience gained with the Mallet freight engines which have been operating for some time on the Central Pacific. Special attention has been given to the steam distribution, and to providing ample sectional areas in the steam and exhaust piping. Although the duty which these locomotives are intended to perform is exceptionally severe, there is every reason to anticipate that they will prove successful in service.

The dimensions, weights, etc., are as follows:

Gauge	4′ 8½″
Cylinders	25″ & 38″ x 28″
Valves	Balanced piston
Boiler.	
Type	Straight
Material	Steel
Diameter	82″
Thickness of sheets	¾″
Working pressure	200 lbs.
Fuel	Oil
Staying	Radial
Fire Box.	
Material	Steel
Length	120⅝″
Width	84″
Depth, front	87¼″
Depth back	74″
Thickness of sheets, sides	⅜″
Thickness of sheets back	⅜″
Thickness of sheets, crown	⅜″
Thickness of sheets, tube	½″
Water Space.	
Front	5″
Sides	5″
Back	5″
Fire-Tubes.	
Material	Iron
Thickness	0.125″
Number	495
Diameter	2″
Length	20′ 6″
Feed-Water Heater Tubes.	
Number	424
Diameter	2¼″
Length	6′ 3″
Heating Surface.	
Fire box	235 sq. ft.
Fire-tubes	5,292 sq. ft.
Feed-water heater tubes	1,590 sq. ft.
Total	7,117 sq. ft.
Grate area	70 sq. ft.
Driving Wheels.	
Diameter, outside	63″
Diameter, center	56″
Journals, main	11″ x 12″
Journals, others	10″ x 12″
Engine Truck Wheels.	
Diameter, front	30½″
Journals	6″ x 10″
Diameter, back	45″
Journals	8″ x 14″
Wheel Base.	
Driving	32′ 0″
Rigid	11′ 0″
Total engine	51′ 4″
Total engine and tender	85′ 1″
Weight.	
On driving wheels	320,100 lbs.
On truck, front	21,000 lbs.
On truck, back	43,700 lbs.
Total engine	384,800 lbs.
Total engine and tender, above	568,000 lbs.
Tender.	
Wheels, number	8
Wheels, diameter	33″
Journals	6″ x 11″
Tank capacity, water	10,000 gals.
Tank capacity, oil	3,200 gals.
Service	Passenger

MASTER CAR AND LOCOMOTIVE PAINTERS' ASSOCIATION.

The forty-second annual convention of the Master Car and Locomotive Painters' Association was held at Atlantic City, N. J., September 12, 13, 14, 15. The convention was opened by the president, J. H. Pitard, of the Mobile & Ohio.

F. W. Brazier, superintendent of rolling stock, N. Y. C. & H. R, addressed the assembly. He laid particular stress on the value of conventions to the men attending them and to the roads on which the men are employed. He mentioned the fact that the New York Central Lines assist their foremen attend their respective conventions to the extent of providing their transportation, considering the time thus spent as time spent for the company. Special mention was made of the younger men present and to them he told of what value just such a convention as this had been to him from the time he was a practicing mechanic up to his present position. He spoke of the difficulty in obtaining young men to enter the painters' trade in railway work, with the idea of working up to the important positions, laying their lack of interest to the fact that the young men of today do not realize the importance of beginning at the bottom and working up. Mr. Brazier closed his remarks by quoting several clippings he has collected under the head of Success. Eugene Chamberlain, also of the New York Central, followed this address with a few remarks.

The following supply companies are represented:

Acme White Lead & Color Works, Detroit, Mich.
American Roll Gold Leaf Company, Providence, R. I.
Anglo-American Varnish Company, Newark, N. J.
Aquart Manufacturing Company, St. Louis, Mo.
Atlas Paint Company, Nashville, Tenn.
Ball Chemical Company, Pittsburgh, Pa.
Cheesman & Elliot, New York.
Chicago Varnish Company, Chicago.
Detroit Graphite Company, Detroit, Mich.
F. W. Devoe & C. T. Raynolds Company, New York.
Jos. Dixon Crucible Company, Jersey City, N. J.
Flint Varnish Works, Flint, Mich.
Flint Kote Manufacturing Company, Boston, Mass.
Flood & Conklin Company, Newark, N. J.
Glidden Varnish Company, Cleveland, Ohio.
N. C. Graves Company, Philadelphia, Pa.
Hildreth Varnish Company, New York.
Kay & Ess Company, Dayton, Ohio.
Ideal Manufacturing Company, Chicago.
Imperial Car Cleaner Company, Newark, N. J.
Chas. R. Long, Jr., Company, Louisville, Ky.
Louisville Varnish Company, Louisvlle, Ky.
Lowe Bros., Dayton, Ohio.
John Lucas & Company, Philadelphia, Pa.
Mamolith Carbon Paint Company, Cincinnati, Ohio.
Murphy Varnish Company, Newark, N. J.
Patton Paint Company, Newark, N. J.
Penna. Specialty Company, Philadelphia, Pa.
Pratt & Lambert, New York.

Sherwin-Williams Company, Cleveland, Ohio.
James B. Sipe & Company, Pittsburgh, Pa.
Edward Smith & Company, New York.
St. Louis Surfacer & Paint Company, St. Louis, Mo.
M. B. Suydam Company, Pittsburgh, Pa.
Tousey Varnish Company, Chicago.
U. S. Metal & Manufacturing Company, New York.
Valentine & Company, New York.
Wadsworth-Howland Company, Chicago
Wolfe Brush Company, Pittsburgh, Pa.
C. H. Willey, New York.
Wilson Remover Company, New York.
J. L. Whiting—J. J. Adams Company, Boston, Mass.
Yarnell Paint Company, Philadelphia, Pa.

HEADLININGS OF PASSENGER CARS.*

By James Gratton, B., R. & P. Ry.

In my opinion, composite board is the most suitable headlining material from the painters' standpoint, as heat and moisture do not affect it the same as wood veneer and other headlining materials.

The composite board is an excellent non-conductor, it is impervious to sound, will keep out heat and cold and is not distorted by shocks and strains, it will not check, crack and blister, as is the case with veneer headlining when exposed to moisture and to extremes of temperature.

Surfacing, Painting, Decorating and Varnishing, New: Prime front and back of sheets before applying. After headlining is in place, putty all defects and give two leveling coats of surfacer, sand paper with No. 1½ sand paper and apply two coats of flat color to harmonize with interior finish of car. Decorate in gold (we use one ⅜-in. gold stripe). Apply two coats of pale body varnish. After thoroughly hard, rub down to an egg shell finish or leave in the gloss as may be desired.

Maintaining Old Headlinings: Painted headlinings, we clean, repaint, decorate and varnish. Headlinings finished in the natural wood, we clean and refinish in the natural wood finish as long as they present a fair appearance. After they become discolored from length of service, repeated varnishing, burning around lamps, or from a defective roof or where the veneering comes apart requiring removal and replacing with new sheets, or where they have been elaborately decorated with scrolls and strips (which in the present age is a thing of the past) and which to patch and redecorate would be unsatisfactory and expensive, we consider it best to thoroughly sandpaper, apply one coat of filler and two coats of flat color to harmonize with the interior finish of the car, thoroughly sand paper, apply one coat of filler and two coats of pale body varnish. After thoroughly hard, rub down to an egg shell finish or leave in the gloss, as desired.

This in my opinion is the cheapest and best way to maintain an old headlining and it will last for several years. At such times as the car needs shopping again we find a headlining finished this way will clean up very nicely and will not need any further expense added to it than cleaning and revarnishing or going over with a good emulsion car cleaner.

By Thos. R. Cowan, C. P. Ry.

The methods of preparing and treating ceilings or headlinings, which require great care and attention on the part of the operator, are as follows:

Ceilings or headlinings, known as the Empire Style, consist of veneer of several layers, cut and pressed into the required shapes and forms, and then given a good coat of paint before being placed in position; this protects the back from dampness. After the veneer is fitted the screw holes and joints are primed, then puttied with hard putty and let stand for 24 hours, then sandpapered down.

A good coat of glue size is then applied to the veneers, using fish glue reduced to a proper working consistency and allowed to dry before canvas is applied.

Duck canvas of a very strong quality is then cut to the required shapes to fit, and given a good heavy coating of size which is an equal preparation of glue and flour made into a very strong adhesive cement. This should stand a short time after sizing to allow for any shrinkage that may take place.

The canvas is then placed in position, being well rolled and rubbed out to remove air blisters and creases, to insure an even surface. This is a very particular operation as any unevenness of the canvas is very noticeable, and more especially after the work is completed. This operation should be allowed to stand at least 24 hours to properly dry.

The canvas then receives a good coat fo glue size, care being taken to avoid missing any portion of the canvas, as any unsized parts will make the painting look patchy. When dried, the canvas is then ready to receive its first coat of paint, a good strong color being well brushed into the canvas.

The next operation is that of glazing. All seams are glazed evenly so that the joints of the canvas will not be noticeable. In this part of the work the operator must take great pains, as the appearance of the work depends greatly on this operation. After the glazing is properly dry it is given a good sandpapering to even down any heavy glazing or putty spots.

The second, third and fourth coats are given, using a tint suitable for the gilding grounds of Dutch Metal or Aluminum Leaf; such colors as yellow and silver gray.

The ceiling is now ready for the gilder, who prepares a strong gilding size and goes over the whole surface evenly. Great care must be taken when laying on the metal to avoid breaks, as they show badly when lacquer is applied. The lacquer can be used of any shade and according to the style of ornamental work to be applied.

Stencils can be cut for any design and the colors used in stenciling should not be too dark. I think a color similar to the lacquered work (a few shades darker) produces a good effect; much better than dark lines.

Three coats of rubbing varnish are applied to the work, allowing the usual time of drying between coats.

These headlinings as a rule are not varnished only every five or six years. We do not rub them because the projections on the canvas would only rub through.

This completes the whole work on the Empire system of headlining. These particulars are written from the work actually done, and I have much pleasure in saying that any work carried out on these lines cannot fail to give good results.

Many ceilings, except those of the Empire style, are now being lined with Agasote, from the first-class down, and in my opinion, I think it is far superior in many respects to the glued veneer as is so generally used in the railroad world.

Veneer, if not properly glued, or where a poor quality of glue may be used, is liable to crack and blister when the painter is about half through his work. Or, take a car which is subjected to all sorts and conditions of weather, a roof may leak a little. A car may stand in the yard at zero weather and no heat available. All these and many others are the causes of veneer giving way.

The Agasote overcomes that trouble and if prepared properly will last for many years.

Our method of preparing these headlinings is to first of all give to the back a good coat of strong brown paint. No part of it must be missed, as this protects it from any dampness penetrating it from the exterior part of the car. These sheets are ready for painting, but in cases where rough surface might occasionally be received, the following method might be employed:

*Papers read at meeting of the Master Car and Locomotive Painters' Association, held at Atlantic City, N. J., September 12 to 15, 1911.

The inner side of the sheet is rubbed down smoothly, using coarse sandpaper for this operation.

To do this work properly we use a block slightly smaller than a full sheet of sandpaper to allow for tacking down. This block is well weighted on top, a long handle is inserted in the block and the block moved all over the surface of the board, which in a very short time will take on a very smooth face. This operation is very seldom done.

The board is then ready for the carpenters to nail up in position. After the lining is fitted it is given a good strong priming coat, and when dry all holes are puttied up and glazed on parts where necessary, and left to dry for about 24 hours.

Before receiving the second coat it is again well sandpapered and again sandpapered before the final coats. The second and third coats are of the standard colors, the principal of which is green and very pale. These coats do not want to dry bright, but a little on the flat side, which makes the stenciling work much better, and gives cleaner edges. Both of these coats are well stippled.

The next operation is that of decorating, the colors used (if green) being a few shades darker, and any particular portion of the ornament is relieved by a still darker shade of green. This part of the work is done by hand, but the improvement it gives to the stenciling is well worth the time and labor that is expended.

These headlinings receive three coats of rubbing varnish slightly thinned with turpentine which prevents any discoloration on the light painted work for the first coat, and use pure varnish for the second and final coat. The majority of the ceilings are left bright.

The great feature of these ceilings is that they can be well washed at terminal points without any fear of water penetrating the joints and cracking or lifting it, as would be the case with wood veneer work.

GRAND RAPIDS & INDIANA RY.

We show herewith a few more shop kinks in use at the Grand Rapids shops of the Grand Rapids & Indiana Ry. The operation of the devices may be easily seen from the drawings.

Figure 1 shows Ruckles internal grinding machine, a patented device. The piece to be ground is fastened to the vertical face plate, which is movable in two directions. The grinder can be quickly moved along the bed by means of the hand wheel shown.

Figure 2 is a tap chuck for drill presses consisting of a standard taper shank at the base of which is constructed a special chuck arrangement for holding taps, thus allowing work to be drilled and tapped at one setting. Figure 3 shows a driving spring puller which is very simple in construction. In figure 4 is shown a key-way cutter for driving wheel centers.

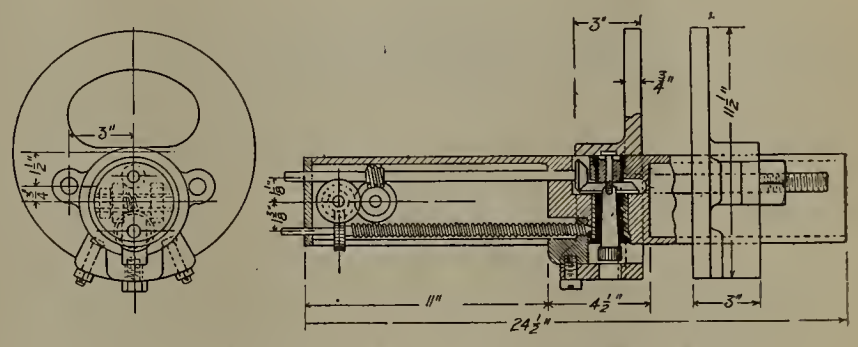

Fig. 4—Keyway Cutter for Driving Wheel Centers.

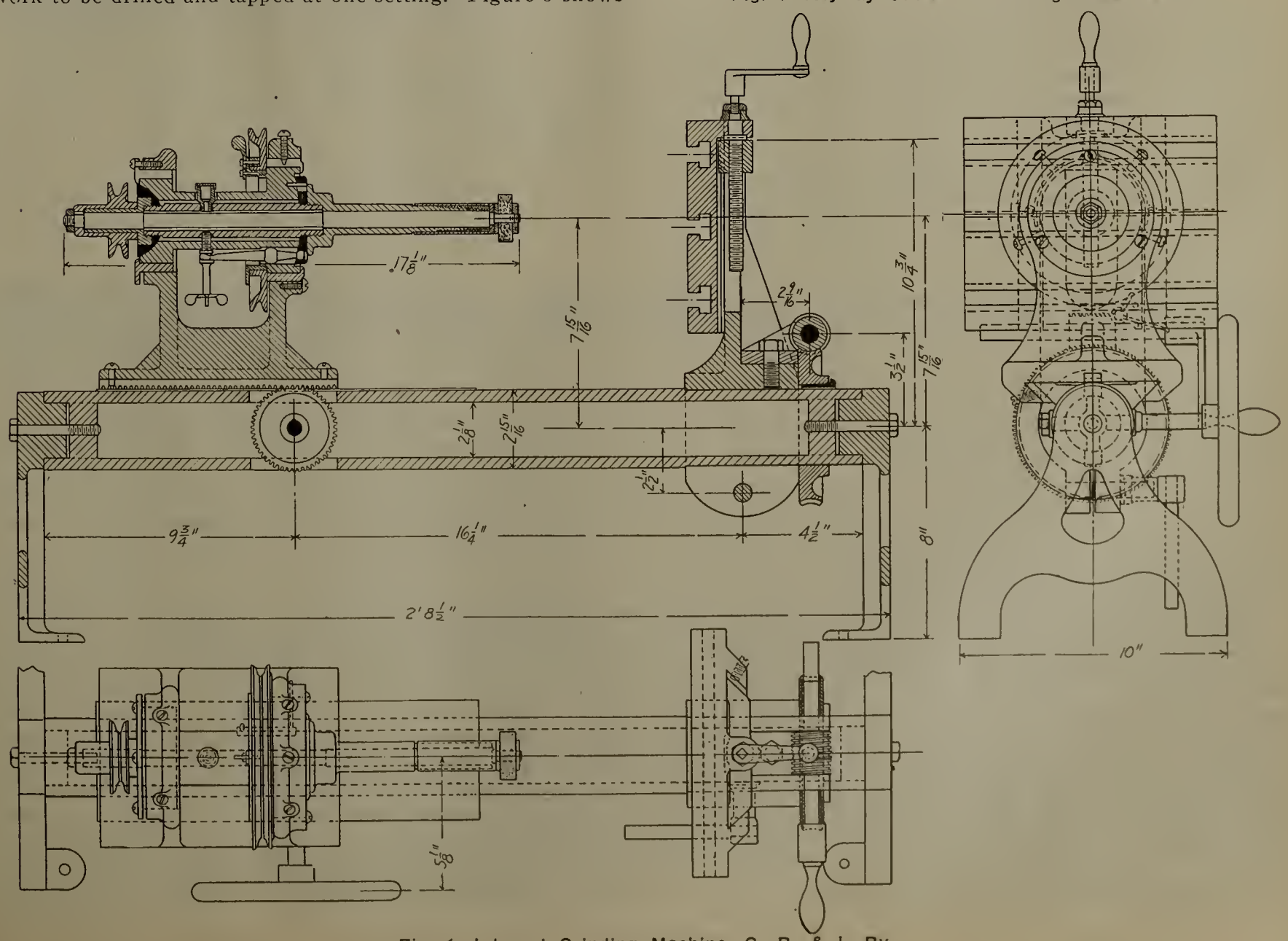

Fig. 1—Internal Grinding Machine, G. R. & I. Ry.

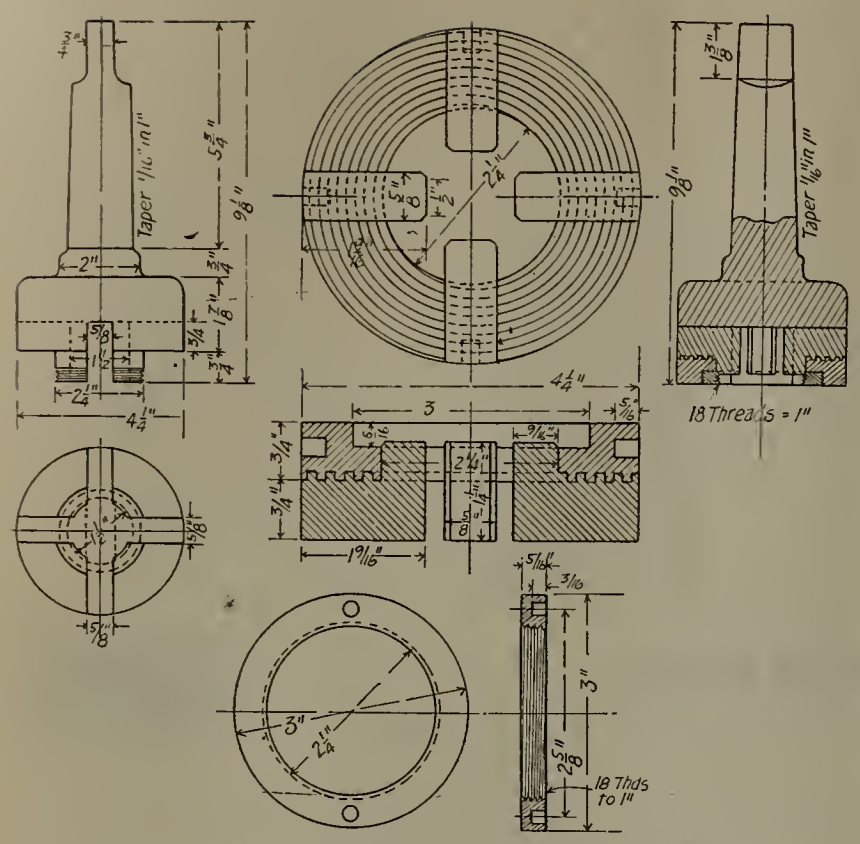

Fig. 2—Tap Chuck for Drill Press, G. R. & I. Ry.

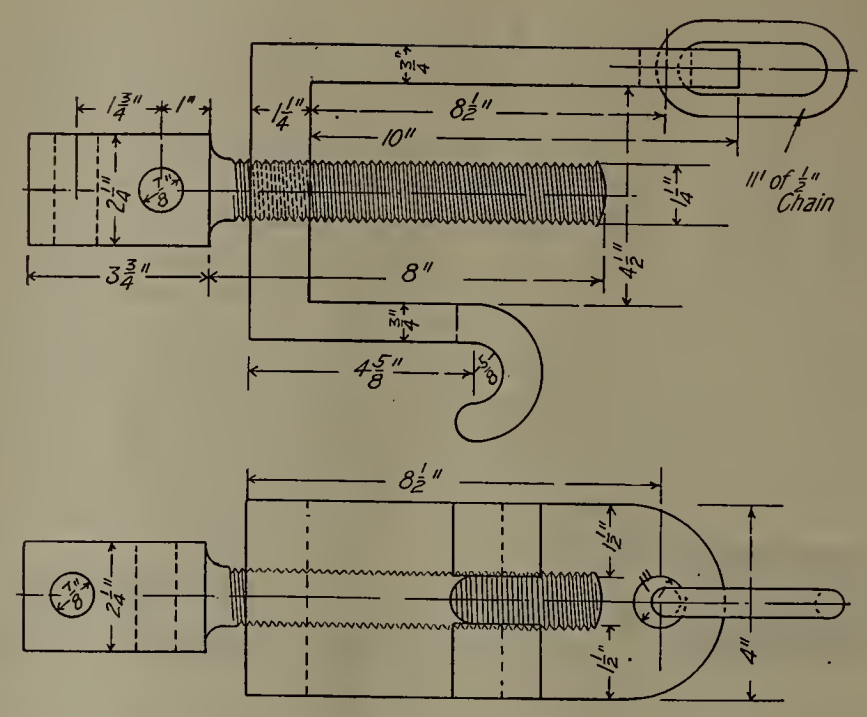

Fig. 3—Driving Spring Puller, G. R. & I. Ry.

THE WELCOME MAN.*

By Jno. J. Baulch, Supt. Manufacturers' Railway, St. Louis.

In looking around for a title to a short paper for the vacation series and having in mind a promise made to the Club for this "filler," which, in some measure, should be a discussion of Col. R. V. Taylor's fine talk at our March meeting, I ran across the following and at once decided to use the title and also the words as a part of the article, it being to my mind in full accord with Col. Taylor's expressed sentiments of "The Railroad Man":

"There's a man in the world who is never turned down, wherever he chances to stray; he gets the glad hand in the populous town or out where the farmers make hay; he's greeted with pleasure on deserts of sand, and deep in the aisles of the woods; wherever he goes there's the welcoming hand—he's The Man Who Delivers the Goods. The failures of life sit around and complain; the gods haven't treated them white; they've lost their umbrellas whenever there's rain, and they haven't their lanterns at night; men tire of the failures who fill with their sighs the air of their own neighborhoods; there's a man who is greeted with love-lighted eyes—he's The Man Who Delivers the Goods. One fellow is lazy, and watches the clock, and waits for the whistle to blow; and one has a hammer, with which he will knock, and one tells a story of woe; and one, if requested to travel a mile, will measure the perches and roods; but one does his stunt with a whistle or smile—he's The Man Who Delivers the Goods. One man is afraid that he'll labor too hard—the world isn't yearning for such; and one man is ever alert, on his guard, lest he put in a minute too much; and one has a grouch or a temper that's bad, and one is creature of moods; so it's hey for the joyous and rollicking lad—for the One Who Delivers the Goods!"

The rank and file of the St. Louis Railway Club are and have been "welcome men" and when Col. Taylor voiced his loving, kindly remembrances of his lifetime friend and companion, Col. E. L. Russell, there were many responsive hearts in his audience, for we had known Col. Russell as "a welcome man," "a railroad man," and a friend in the fullest acceptance of the term—and, as we look over the pages set apart to the memory of those "who have gone before" we find the names of many "a welcome man." There is not much room for discussion of Col. Taylor's address. It is full of strong argument, delicate sentiment and timely advice, the voice of a practical worker high up in the councils of the company he represents and in the railway service. We can only absorb it—and follow its precepts and his example—and by doing so "deliver the goods." How few there are outside of the rank and file of railroad men who appreciate the necessary qualities that make for success in any branch of railroad work.

Col. Taylor says: "First, courage; second, intelligence; third, honesty; lastly, industry." Not much can be added. The truly "welcome man" is punctual, indefatigable—a graduate of the university of hard knocks, who has "cut the grump and the grouch and got onto his job," knows the detail, turns it over to others and solves big problems, and smiles the while—and

> "It's easy to laugh and be happy
> When life moves along like a song,
> But the man worth while
> Is the man who can smile
> When everything goes wrong."

for there are days when this strenuous railroad work seems to go all wrong—nothing right from general manager to office boy—then it is that the "railroad man" shows his courage and ability, smiles at his troubles and fights and works his way out of his difficulties, weathers the storm and can sit back and feel that he has accompanied something. Speaking of general managers and office boys—Mr. Joseph Ramsey asked me once if I ever abused my messenger boys. A negative reply brought the remark: "Don't ever do it, you don't know how soon he may be a general manager," and we all know that Mr. Ramsey is a "welcome man."

Commencing with the messenger boy. A doting parent and fond mother conceives the idea that although a failure in several ventures he is surely the making of a railroad man—it's so easy, you know, and Tommy is easy. Papa brings him in, discourses on his ability, says Tommy is a fine boy, eighth grade, very smart in school, and so you take him on. In a few days you are going over the yard, here comes your fledging with a pipe stuck in his face and a cheap novel in his pocket—meandering along—forgets to say good morning—his thoughts anywhere but on his work and then you give him some attention. His time and mind is occupied in absorbing all of the gossip of the crossing watchmen, he attends all the "ash pile" and "end of the tie" con-

*Presented before the St. Louis Railway Club.

ventions, and assumes to arrrange the policy of the company from that direction; he seems

"To have arrived from the town of No Good
On the banks of the River Slow,
Where lives the wait-awhile flower fair
Where the some time or other scents the air
And soft go-easies grow."

"It lies in the Valley of What's the Use
In the Province of Let Her Slide;
The tired feeling is native there,
It's the home of the reckless I Don't Care
Where the give-it-ups abide."

The quicker you take that young man in, give him some strong, fatherly advice, which, if he is the right kind of a boy, will change his methods—if not he should change his business abruptly and absolutely. But there are many bright boys who are coming along to take our places with all the characteristics quoted by Col. Taylor, who keep a sharp lookout for the work in hand, who do not require constant watching and who in the near future will not only be able to do their own work well but to assist in and finally direct the efforts of another and then others, and, as has been aptly said, "The more people he can direct and the higher intelligence he can rightly lend, the more valuable is his service."

Add to this a superlative degree of enthusiasm and we have the "welcome man," who in the fullest acceptance of the term can "deliver the goods." It may be he will not please everybody, but some writer says, "'twould be awfully monotonous if we could please everybody," and again, he will make mistakes. Elbert Hubbard says: "The man who never made a mistake never made anything else worth a d——."

The title of general foreman has been abolished on the New Orleans, Ontario & Western and the following have had their titles changed to master mechanic: W. W. Daley, Norwich, N. Y.; H. Kinney, Carbondale, Pa.; P. H. Minshull, Middletown, N. Y. Harvey Shoemaker has been appointed superintendent of shops at Middletown, N. Y.

T. E. Freeman, of the Chicago, St. Paul, Minneapolis & Omaha, has been appointed general foreman of locomotive repairs on the Duluth & Iron Range at Two Harbors, Mich. He succeeds L. H. Bryan, resigned to accept a position with the Chicago Pneumatic Tool Co.

George Seanor, division foreman of the St. Louis & San Francisco, Joplin, Mo., has been appointed general foreman of shops, office at Sapulpa, Okla., succeeding J. F. Long, promoted. J. Morgan has been appointed assistant to general foreman of shops, with office at Sapulpa.

T. T. Cloward, foreman of locomotive repairs of the Philadelphia, Baltimore & Washington at Bay View, Md., has been appointed general foreman of the shops at Wilmington, Del.

F. E. Bates has received the appointment of assistant superintendent of locomotive fuel service of the St. Louis & San Francisco, with office at Francis, Okla.

A. B. Todd has been appointed master mechanic of the Butte County, succeeding James Chambers, with office at Chico, Cal.

M. J. McCarthy, superintendent of shops for the Cleveland, Cincinnati, Chicago & St. Louis, has been appointed assistant superintendent of motive power, with office at Beech Grove, Ind. R. J. Williams has been appointed superintendent of shops at Beach Grove, succeeding M. J. McCarthy.

P. M. Hammett has been appointed superintendent of motive power of the Sandy River & Rangely Lake. The office is at Portland, Me.

Frank A. De Wolf has been appointed acting shop superintendent of the United Railways of Havana, with office at Havana, Cuba.

H. Y. Harris, general foreman of the Tampa Northern, has been appointed master mechanic, his headquarters remaining at Tampa, Fla.

The position of superintendent of power house at Reading, on the Philadelphia & Reading, has been abolished. D. T. Williams, mechanical engineer, will hereafter report direct to H. D. Taylor, superintendent of motive power and rolling stock.

George C. Smith has been appointed purchasing agent of the Union Pacific, succeeding J. W. Griffith, retired. The office is at Omaha, Neb.

INDUSTRIAL NOTES.

Luther H. Bryan, general foreman of the Duluth & Iron Range, Two Harbors, Minn., and widely known as the secretary of the International Railway General Foremen's Association, has left railway service to take a position with the Chicago Pneumatic Tool Co., Chicago, as its representative at Birmingham, Ala.

The General Equipment Co., New York, has appointed Frederick M. Nellis as its western representative, with office in Chicago. Mr. Nellis was formerly New England representative of the Westinghouse Air Brake Co., and the Westinghouse Traction Brake Co.

The Railway Steel-Spring Company, New York, has closed a deal whereby it will acquire the plant and property of the Inter-Ocean Steel Company, Chicago Heights, Ill. The Inter-Ocean company is a close corporation, organized a few years ago to make car wheels and rims. It has outstanding $2,500,000 stock and $478,000 6 per cent convertible notes. The stockholders will receive for their holdings from the Railway Steel-Spring Company $125 per share, making the purchase price of the plant, provided the notes are converted, something over $3,500,000. The money required for the purchase will probably be raised by an issue of $3,500,000 bonds.

The Central Locomotive & Car Works has received an order for the following equipment from the San Diego, El Paso & St. Louis: 2-10 wheel locomotives; 1 caboose car, capacity 60,000 lbs.; 25 box cars, capacity 60,000 lbs.; 10 gondola cars, capacity 60,000 lbs.; 10 stock cars, capacity 60,000 lbs.; 2-54 ft. passenger cars; and 1-54 ft. passenger and combination car.

The Hanna Locomotive Stoker Co., Cincinnati, Ohio, has moved its offices from the South National Bank building to the Mercantile Library building.

The Universal Draft Gear Attachment Co., Chicago, has been incorporated to manufacture and deal in railway equipment and supplies. The incorporators are: M. G. Lockhart, J. K. Murphy and G. R. Faust. Capital, $50,000.

New Literature

Allis-Chalmers Co., of Milwaukee, has issued a pamphlet showing the advantages of using the "Acco" expander ring for holding the leather packing in air brake cylinders.

* * *

The C. W. Hunt Co., of New York City, in one of its latest booklets shows the line of Hunt electric locomotives for industrial plants. They operate on storage battery, trolley or third rail.

* * *

The Westinghouse Electric & Mfg. Co. has recently issued a number of booklets and standard circulars on the following subjects: "Watt-hour Meters for Small Resistance Loads," "Westinghouse A. C. and D. C. Switchboard Meters," "Westinghouse Rotary Converters" and "Westinghouse Engine-Driven A. C. Generator—Type E."

* * *

Mesta Machine Co., of Pittsburg, has published a souvenir booklet descriptive of the visit to the American Society of Mechanical Engineers and the Engineers Society of Western Pennsylvania to its plant on June 2nd of this year. It is a very neat affair and besides showing a two-page photograph of the members of the societies it gives many views of Mesta plant and its products.

* * *

Stockbridge Machine Co., Worcester, Mass., has recently issued a catalogue of the Stockbridge two-piece crank shaper. The special feature of these machines is the patented two-piece crank motion which gives a uniform speed throughout the entire length of the cutting stroke, together with the quick return. All the details of the machine are well illustrated and described.

* * *

A new story of the Bettendorf Bears entitled "Goldenhair and the Bettendorf Bears" has been published by the Bettendorf Axle Co., of Bettendorf, Iowa. It is made up in story-book form with board covers and illustrations in color, and tells the story of a little girl wandered away to the home of one of the bears who took her with him to the big plant and showed her the wonders. It is an interesting book for the children, and when they are not looking at it, the "grown-ups" may take a peek at it.

* * *

Catalogue L of the Cleveland Pneumatic Tool Co., Cleveland, O., is an excellent example of trade literature, the illustration and reading matter being well chosen, the latter being free from extravagant wording. It shows a full line of pneumatic tools and is worthy of the attention of those interested in them.

* * *

Wm. Robertson & Co., Chicago, describe the operation of the Robertson pneumatic cinder conveyor in a leaflet, also showing a cinder pit layout and plan of tracks for it.

* * *

C. W. Seddon, of Proctor, Minn., has issued a circular descriptive of the Seddon boiler feed device. By this device the feed water instead of being discharged into the boiler in a solid stream is introduced in the form of spray or small drops. This method is said to cause impurities to separate from the water at once, and they are caught in a pan below the spray pipe.

* * *

Sargent Co., Chicago, has issued a folder showing the safety water gauges and lubricator guards which it handles.

NEW TYPES OF VALVE GEARS.

In the May issue of the *Railway Master Mechanic*, page 173, a valve gear manufactured by the Pilliod Brothers Co., Toledo, O., was described in detail. One of the interesting features of the gear described was the fact that it obtained imparting motion from the locomotive crosshead. This concern has recently brought out two new types of locomotive valve gears which are equally interesting.

The gear previously described is called by its manufacturer, "Style A." The new gears are called "Style B" and "Style C." These gears are illustrated in the accompanying line drawings. The makers have the following to say of the new gears:

"Style B" should have the consideration of those who are satisfied with the economy and efficiency results obtained with the Stephenson and Walschaert gears, but who desire a gear that eliminates the objectionable features of these gears, and one that can be applied to old power at a less cost than any other gear. It should be of special interest to those who contemplate changing old engines from the Stephenson link to an outside connected gear, because it can be applied without any modifications of the engine, in much less time, and at a considerably lower cost than any other gear. It is an outside gear, of few parts, perfectly accessible, without links or blocks. The movement is obtained from the crosshead only, and it is not subject to the strains and distortional effects of the crank connected gears. All parts, including frames, are standard for any type or class of engine, either inside or outside admission, with exception of the combination lever, which differs in length according to the piston stroke. Each bearing has an oil cellar of special design, automatic in its feed and so arranged that any sediment which might pass with the oil from the outside can in no way get into the bearings. Roundhouse men cannot make any changes in this gear, as there are no rods to lengthen or shorten. It can be applied in 48 hours, without any modification of the engine, requiring ordinary roundhouse equipment to install. New main crank pins are not required.

"Style C" will interest those who want a crank and crosshead connected gear without links or blocks. This gear has the same number of parts and bearings as the Walschaert. It is an outside gear, perfectly accessible, and without links or blocks. Imparting motion is obtained from the crank and crosshead. This gear differs from the Walschaert only in that the links and blocks are replaced with a reverse of the Marshall type. Each bearing has an oil cellar of special design, automatic in its feed and so arranged that any sediment which might pass with the oil from the outside can in no way get into the bearings.

As shown in the accompanying detail drawing the "Style B" valve gear derives its motion entirely from the cross head. Point 10 of the combination lever is connected to the cross head with a union link. The combination lever transmits the motion through the auxiliary combination to point 6 which is connected to point 7 of auxiliary combination lever by means of the connecting link. This gives the lap and lead travel of the valve through point 8, which is connected to the valve stem. Point C is a cross shaft extending across

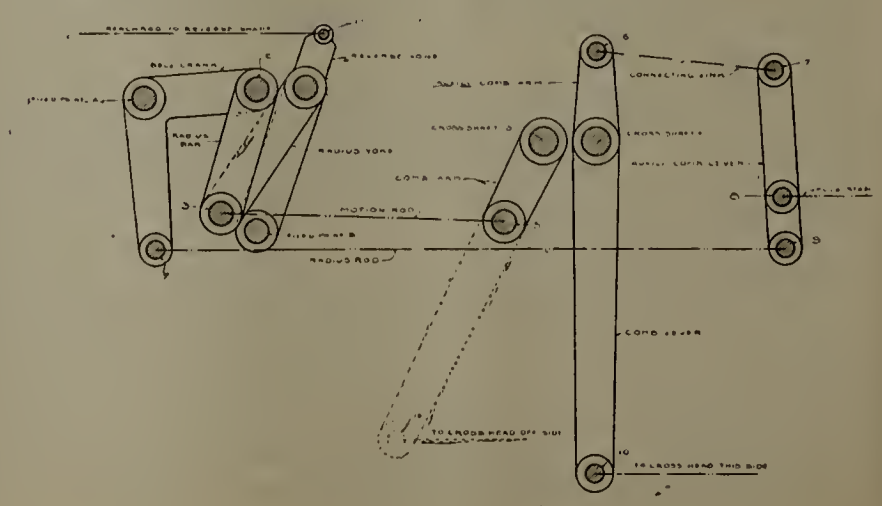

Diagram of Parts.

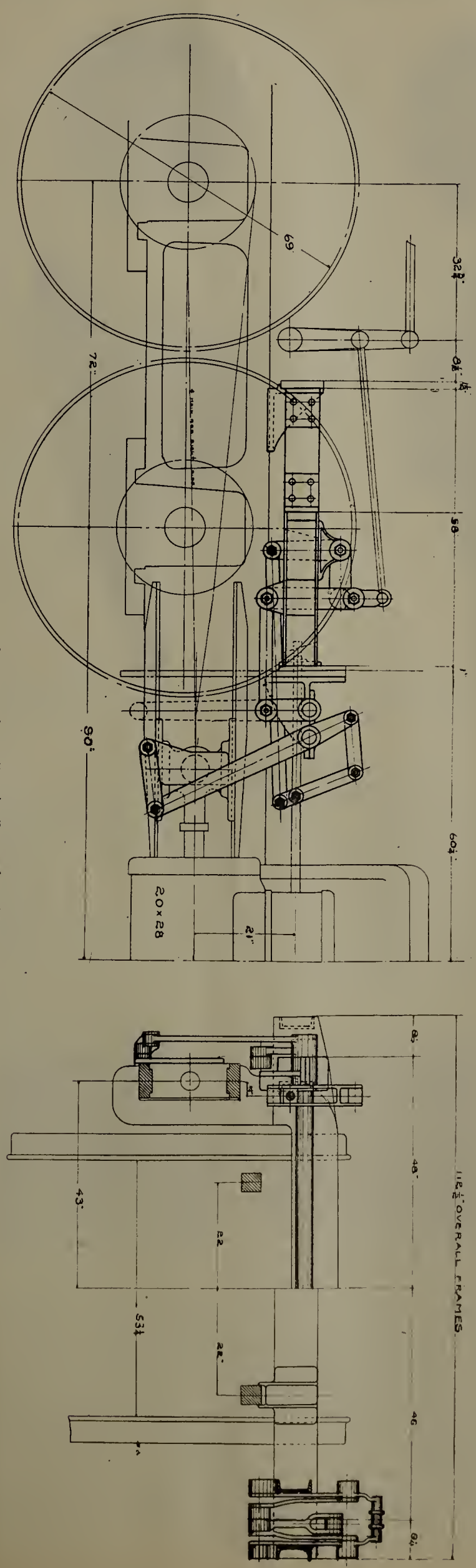

Pillod Brothers "Style B" Valve Gear.

the engine and operating a combination arm on the opposite gear. From the opposite crosshead through cross shaft D the motion is transmitted to point 5, which is connected to point 3 by the motion rod. The oscillation of the radius yoke around point 1 raises and lowers the radius bar. This is connected at point 2 to the bell crank, which in moving around point A transmits the motion to the radius rod through point 4. The radius rod in turn acts upon the auxiliary combination lever and gives the accelerated movement to the valve through point 8, which is connected to the valve stem. Point 11 is connected to the reserve lever by the reach rod. The movement of the reverse yoke, at the various points of cut off, around point B will cause point 3 to move in various planes.

STORLE BRASS GLOBE VALVE.

A new valve is being placed on the market. This is a high pressure valve, called the "Storle," built extra heavy throughout and of metal especially adapted for that purpose. As shown in the sectional drawing, the taper plug and two seats A and B, used in place of the single seat and disc of the old style valve, give it the properties of a nearly balanced valve and makes it easily operated under pressure. The ports D in the bottom of the plug allow the pressure to get to the upper seat and counteract the pressure of the lower seat, so that it is practically a balanced valve, the difference between the area of the two seats being very slight.

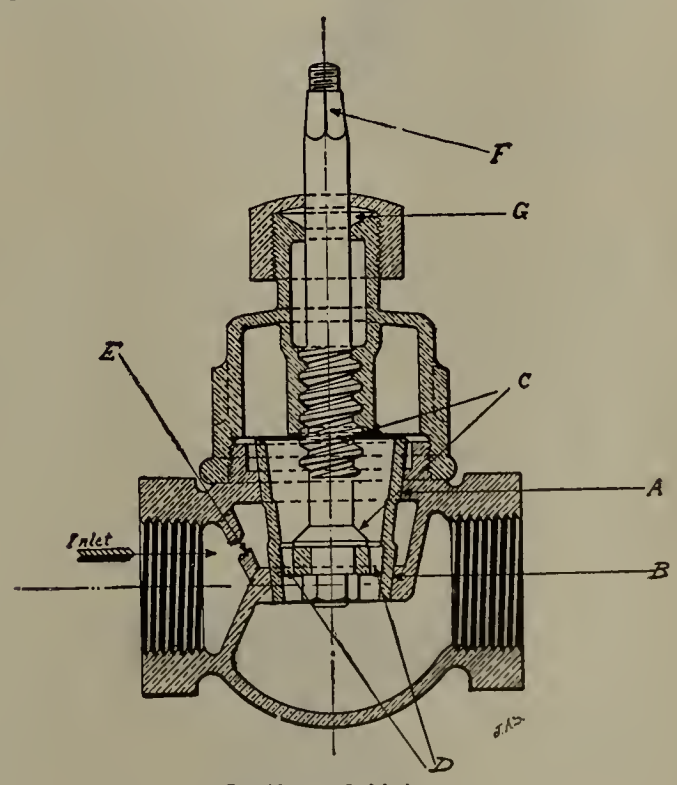

Section of Valve.

The stem is made short so the valve can be used in places where a long stem would interfere with surrounding obstacles and has a removable hand wheel so that it can be conveniently packed when closed and hot. Another attractive feature is that this valve can also be packed when wide open by having the two seats C meet and cut off the pressure in the stuffing box. The stuffing box is made large enough to use ¼-in. stem packing without cramping it.

The inlet has an obstruction bar E to prevent scale from hitting the opposite side of seat B with full force.

This valve has been carefully tested out over a period of five years, and the results show that it is permanently tight and more easily operated than the ordinary globe valve. The taper plug, which forms the seat, does not turn when opening until it has freed itself from the seats, and when closing stops turning as soon as it touches the seats, and in that way never seats in the same place and elmiinates all wear and cutting by friction, thus leaving the seats practically unchanged and giving the valve its long wearing qualities.

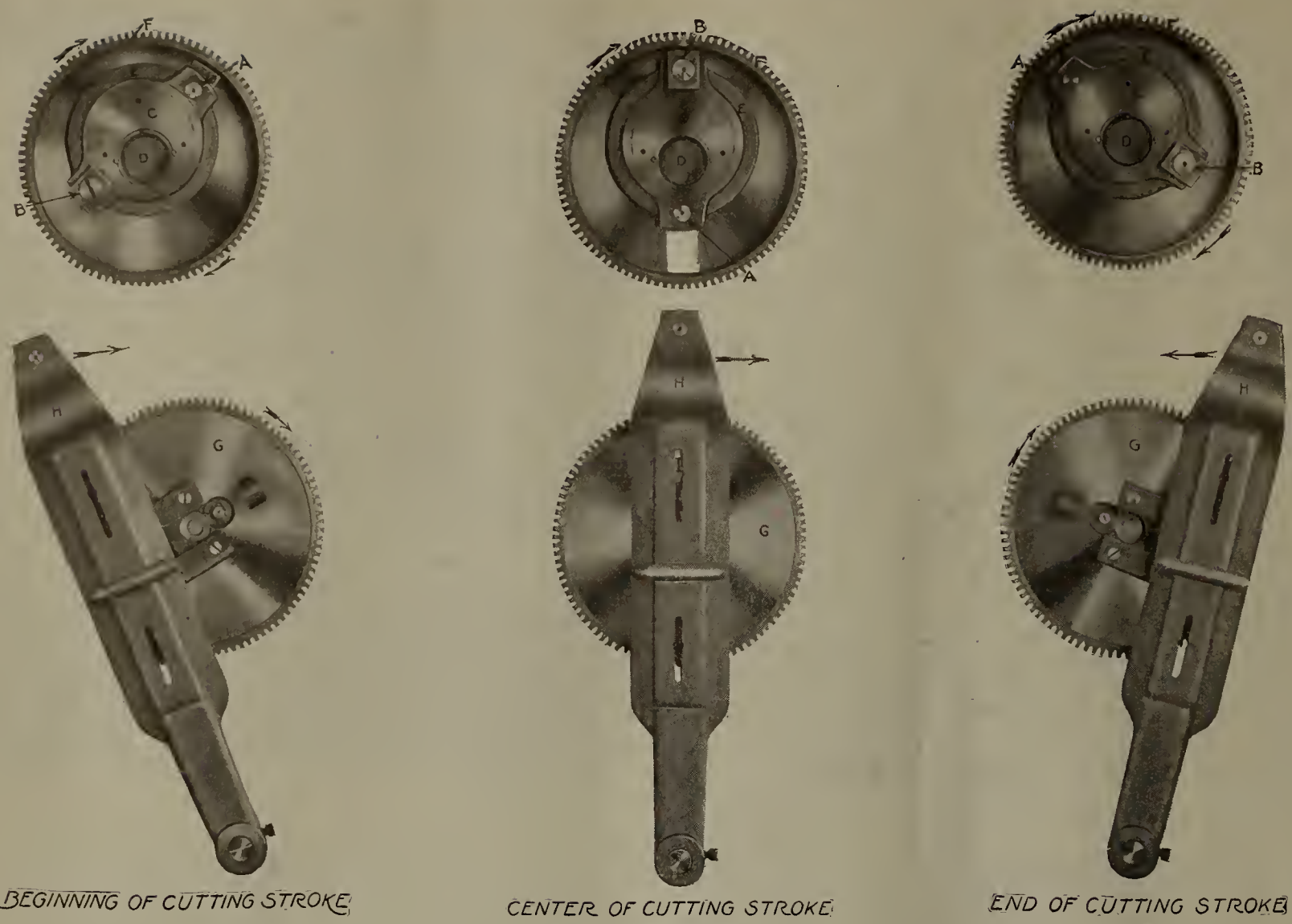

Stockbridge Shaper.

This valve is recommended for steam, water, oil or other liquids under the most difficult conditions. One of the first valves made, which has had five years of service, was recently tested at the factory and found to be absolutely tight under 800 lbs. pressure. All of the valves are tested to a hydrostatic pressure of 800 lb. to 1,000 lb. before being shipped. The valve is being marketed by the Scully Steel & Iron Co., Chicago, Ill.

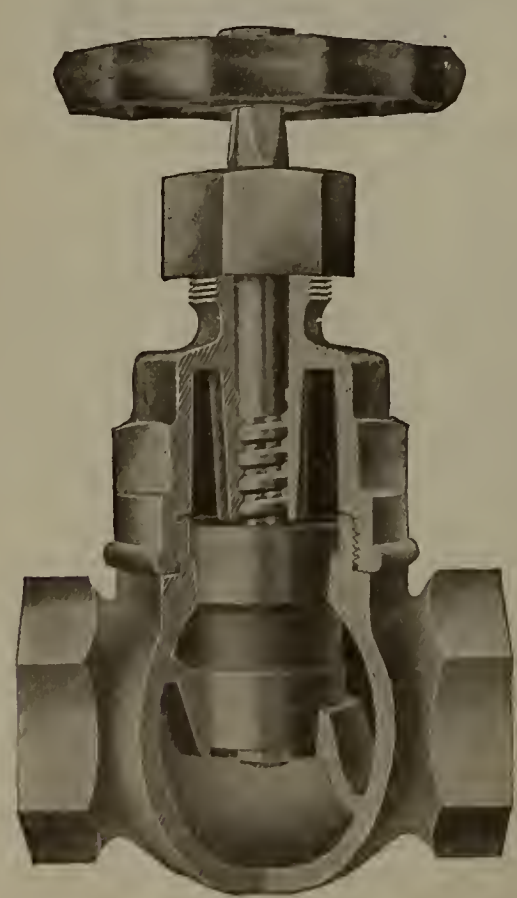

Storle Globe Valve.

STOCKBRIDGE SHAPER.

A shaper manufactured by the Stockbridge Machine Co., Worcester, Mass., is equipped with a two-piece crank which gives an even cutting stroke with a quick return. This motion is obtained by means of a very interesting arrangement illustrated herewith and described below.

The photographic reproductions show the two-piece crank, from left to right, in three consecutive positions. In the explanation it should be remembered that the gear wheel revolves at a constant speed.

The first illustration shows parts in their relative position, just as ram is to start forward on its cutting stroke. Note that the eccentric ring (E) travels around the eccentric (C) —the eccentric (C) does not move; it is keyed to the main bearing hub (D).

The second illustration shows the rocker arm in an upright position, which means, that the ram has traveled one-half the length of the cutting stroke. Note that (A) has traveled, from its original position as shown in (1), about 135 degrees of its entire circle. Eccentric ring crank block (B) which is diametrically opposite (A), and connected with it by the same piece,—that is: the eccentric ring (E),—must have also have traveled an equal arc of its circle,—about 135 degrees. Note that (B) in (2) is in a vertical position. Also that eccentric ring crank block (B) and crank pin block (I) are always in the same relative position. That is, the position of the rocker arm can always be determined by the position of the eccentric block (B), or *vice versa.*

In the third illustration the eccentric block (A) has moved approximately 135 degrees from its position in (2). This is its position when ram has reached the end of the cutting stroke. (A) then has traveled approximately 270 degrees from its original position in (1). The remaining arc of the circle brings (A) back to its original position in (1). That is, the ratio of quick return is the distance that (A) travels in returning the rocker arm from its position in (3), to that of

(1),—representing the end of the cutting stroke in (3), and the beginning of the cutting stroke in (1)—, to the complete circle.

Referring to the velocity curve, the number of teeth in the arc which the eccentric block travels to return the ram is to the whole number of teeth in the gear, which is 96, as 3.27 to 1. This represents the actual quick return ratio for this particular size shaper. The quick return ratio varying between 3 and 4 to 1, depending upon size of shaper. The power that is put into the shaper acts equally on every tooth of the gear.

The circle which the eccentric ring blocks make in traveling around with the gear has a radius constantly varying from the center of the gear. It is this varying distance, that compensates for the varying speed of the regular crank shaper ram, and gives to a Stockbridge shaper ram an even cutting speed the entire length of cut.—the speed coming up gradually and reaching a maximum and remaining the same to the end of the stroke, where it drops off gradually just before reversing. —On the reverse, or return stroke, giving the high ratio of quick return of between 3 and 4 to 1.

The following table shows the ratio of return of the Stockbridge 24-26 inch shaper. Note the high ratio of return on ¼ length stroke, and this ratio of return is maintained even down to 1″ stroke.

On	full length stroke	3 :	1.
On ¾	full length stroke	13 :	5.
On ½	full length stroke	16 :	6.
On ¼	full length stroke	31 :	14.

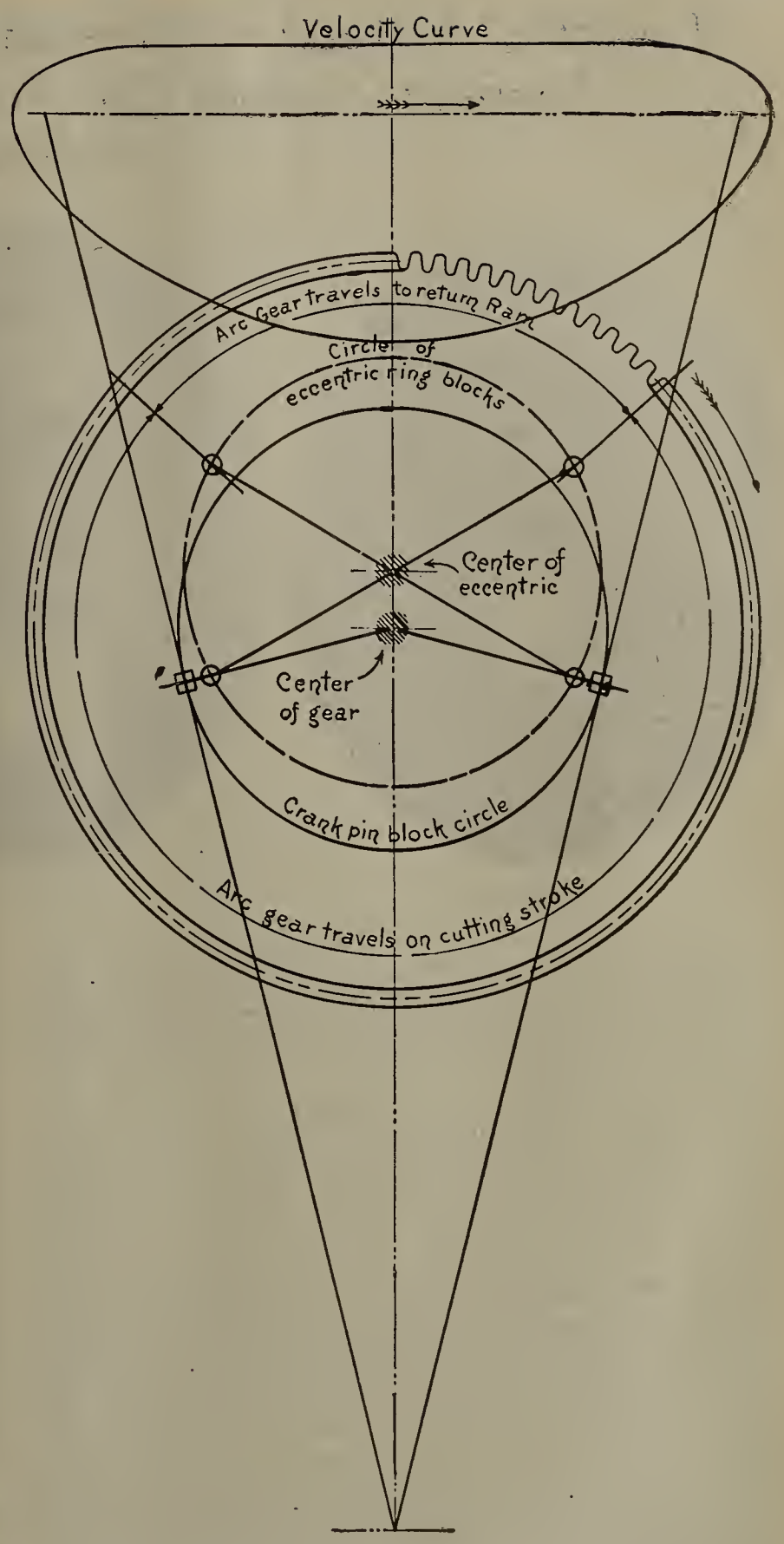

Velocity Curve, Stockbridge Two-piece Crank Shaper.

WELDING LOCOMOTIVE FRAMES.

The breaking of locomotive frames continues, and shop men are endeavoring to secure a good permanent weld which can be effected by the smith in a reasonable length of time without excessive cost.

Various methods and fuels have been tried with more or less success, but it has been found that oil with proper equipment gives a good weld at a surprisingly low cost. The difficulty formerly experienced with this fuel for the welding of locomotive frames is that the crude form of burner used caused oxidization of the metal of the frame, thus very materially weakening it. In order to effect a perfect weld, it is necessary, first, to have a burner which will thoroughly atomize oil of any gravity. The complete outfit must include a small furnace which will insure perfect combustion of the fuel and give a soft mellow heat without any abrasive effect upon the metal of the frame. With this apparatus a frame is welded in 40 minutes. The total cost for fuel (about four gal. of crude oil or fuel oil being used)) and compressed air is from $1.10 to $1.20. No time is wasted cutting away fins or excess metal. Analysis proves that the character and quality of the metal of the frame is not changed in any way. There is no oxidization or corrosion of the metal and all sulphur is eliminated.

An apparatus for this purpose is known as a B-6 furnace and is manufactured by W. N. Best, 11 Broadway, New York City. There are many other purposes in a blacksmith shop or round house for which this apparatus can be used to great advantage. These suggest themselves to the experienced shopman at frequent intervals.

Fig. 1—Insert.

Fig. 2—Furnace in Operation.

Fig. 3—The Weld.

Fig. 4—Oil Furnace.

Twelfth Annual Convention Chief Interchange Car Inspector's and Car Foremen's Association of America

F. W. Trapnell, Pres.

J. L. Stark, V. P.

Stephen Skidmore, Sec.-Treas.

A brief notice of the meeting of this association was given in the September issue of the "Railway Master Mechanic." The convention was held at the Boody House, Toledo, Ohio, on August 22, 23 and 24, 1911, and was without doubt the most profitable meeting that the association has yet held. Following is the report of the proceedings.

President H. Boutet, of Cincinnati, called the meeting to order at 9 o'clock a. m., and introduced L. H. Paine, secretary of the Toledo Commerce Club, who spoke as follows:

Mr. President, members of the association, ladies and gentlemen—I first want to say that Toledo is delighted with the fact that you are here. Toledo always takes off its hat to railroad men and to all those who have any part in the operation of railroads. It is the railroads that have made Toledo, and we feel that the railroads have been quite successful in their work. With our twenty-two lines entering here, Toledo could not help but become the metropolis that she now is and the greater metropolis that she is to become. And it is through the work of the railroad man, and through the friendship of the railroad men, that Toledo looks for its greater industrial growth in the future. With the lake and the railroads we feel that we have an unexcelled city. Twenty miles of docks, the safest harbor on the lakes, steamships entering and leaving every few minutes, railroads entering from the land and carrying the coal of the south and the grain of the west to the steamship lines and here transferring, the steamship lines carrying the ore of the north to the railroads leading to the south and east—Toledo is bound to become one of our great centers of population.

I do not want to spend too much time in blowing about Toledo, but I do know this: When I talk to a Pennsylvania R. R. man, there is only one line on the map and that is the Pennsylvania; when I talk to a Lake Shore man, there is only one road on the map and that is the Lake Shore, and so on down the line. Now you are here in Toledo; we have a chance to take a crack at you, and there is only one city on the map. There may be some very little points around here that at times get travel that ought to come our way, but on this occasion there is only one city and one place in which to travel. While you are here we hope you will enjoy yourselves. We hope that you will really find out what a city we have. I do not know how much time you will have away from the business session, but I sincerely hope that you will have enough to get around and see some of Toledo's advantages.

Get out to the Overland plant, the largest automobile factory in the world; go out to the Ford plate glass plant, twenty-nine acres under roof, the largest plate glass plant in the world. Look at our metal wheel industries. This is the center of the metal wheel industry. Go down to the shipbuilding plant, you will find the largest concrete dry dock in the world. And so I could enumerate a dozen other points of interest that would pay you, as men interested in such things, to inspect and impress upon your minds for years to come.

I presume that in this delegation there are future railroad presidents and shop executives, and it is to these men that I am talking. When you get into these positions we want you to remember Toledo with a kindly feeling, and not only that, but with an intelligent comprehension of what Toledo is and what Toledo ought to be, and we sincerely hope that when that happy time comes Toledo will be remembered.

It is my duty as a rule to talk facts and not throw flowers. In welcoming you to the city I can tell you all the facts that you want to know about Toledo, but when it comes to extending the glad hand and throwing bouquets I am a little bit weak. I am like the old lady who went to the city. She saw where there was a six-inch plank wall built around a man. He was sitting inside and could tell that this gentleman on the other side wore a blue necktie, and that lady had a diamond brooch. This old lady came in and after listening to a few facts that were brought out from the man that was behind this six-inch plank wall, sort of looked around nervously, and here was a man with red hair, and she could not tell how in the world that man could tell that he had red hair. She finally said: "This is no place for me with this thin dress on." I am not going to talk so long as to make too apparent my thin dress. But I want to say that Toledo welcomes you with all her heart and hopes that you will have the most enjoyable, most profitable session that this association has ever held. If there is anything lacking in the entertainment, let the Commerce Club know about it and we will try to supply the want. If there is any information that you want now or in the future, ask us and we are only too glad to give it to you.

We wish that you will have a most pleasant meeting in our city and that when you leave it will be with the feeling that you want to return to us again.

President Boutet:—On behalf of the association, Mr. Paine, I wish to thank you for your words of cheer and welcome. I assure you that the members as a whole, and especially the ladies will appreciate it. There is one member of our entertainment committee that you have picked out, and I think you better set yourself right as he is a great favorite with the ladies, Mr. Wright.

Mr. Wright:—I was unfortunate to hear only a part of Mr. Paine's remarks. I must say that President Boutet has a little the better of me, as I do not know what remark brought forth the laugh. In behalf of the entertainment committee, there is very little we have to say. We want to thank you most heartily for the co-operation we have received through Mr. Paine's efforts and through the organizations of the city of Toledo. With their assistance and with the good will that we always receive from the association, I think you will put in most of your spare time in a most enjoyable way. If we fall short in any way we only ask your indulgence. Call on us and we will blame it on to Mr. Paine. I think that is the way Mr. Paine has put it up to us.

President Boutet:—We have with us Mr. Thomas B. Fogg, general manager of the Toledo Terminal Railroad of Toledo.

Address of Mr. Fogg.

Mr. President, Ladies and Gentlemen:

I was called upon rather suddenly to make a few remarks. It is certainly a very great pleasure and particularly so as the members have brought with them their wives and families, which I believe will aid them in their work. I do not think that you could be so successful unless you have your families present to encourage you in your work. You have a great many important questions to discuss and I know that your time for discussion is limited. I will not take up much of your time, but I hope and trust that you will be successful in solving the problems that confront you, and if there is anything further that the city of Toledo can do to help you, I stand ready to support the remarks of Mr. Paine who informs you that this city will do its best, and the Toledo Commerce Club will furnish you any information or anything that may be wished. I thank you.

Mr. Lucore, being called upon said:

I am very sure the members of this association and their families feel grateful that the general manager of one of the Toledo railroads would come out and express himself as was done now.

We are here as I understand it to consider the rules of interchange as laid down by the Master Car Builders' Association. We have a splendid set of rules, but good rules are not everything. A great deal depends upon how these rules are enforced, and you are the gentlemen throughout this country who give the rules working effect in the actual operation of railroads. And on behalf of this association, Mr. Fogg, I want to assure you that our effort shall be along the line of having the rules so perfectly operated that although there are a great many railroads in this country, some day the interchange of cars will be handled so nicely that it would seem as though it were one great system.

President Boutet:—We expected to have with us this morning, Mr. T. J. Burns, assistant superintendent of motive power of the Michigan Central, and the Mayor of the city has been detained, so I will impose upon you a few remarks.

It affords me a great deal of pleasure to again address you on this, our twelfth annual meeting, and I feel sure that our meeting here will be attended with the usual good results that the previous meetings have met with.

It is very gratifying to me to see the large number of ladies we have in attendance and I trust that the members of the association will continue to bring their wives and daughters with them from year to year as there is nothing, in my opinion, that adds so much to the tone of the meeting and its welfare as to have the ladies with us to share the pleasures that may come up on our annual visits.

During the last year death has invaded our ranks and taken from our midst Mr. Dan McOsker of the McCord Co., a social member of our Association, and Mr. J. F. Mann, G. C. F. of the P. M. Ry., Saginaw, Mich.

Obituary notices of their deaths were printed in the Railway Master Mechanic in the issues of December and January, which I feel all the members read with a great deal of regret.

It is not my desire to impose on you a long talk, as we have had so many good speakers preceding me, but as this is the last meeting at which I will preside over you, I wish to give you a brief history of the association, which I believe will be of interest to the new members.

During the years 1897 and 1898 we had considerable trouble, as we found at Cincinnati that when we passed cars at that point, they would frequently go to some other large interchange point and be carded or transferred for defects which we had considered safe and not cardable at Cincinnati.

This was caused by different interpretations of the M. C. B. rules at the different points, and I requested my executive committee to endeavor to get the joint car inspectors together so that we could go over the rules and get a more uniform understanding of them.

The Cincinnati executive committee on joint inspection called a meeting of the joint car inspectors, which was held in the Carew Building in March, 1898, which adjourned to meet on September 16, 1898, at the St. Louis Union Station, this meeting adjourned to meet at the Kansas City Union Station in March, 1899, where we agreed to again meet in Cleveland in September, 1899, at the Colonial Hotel.

Up to this time no permanent organization had been formed, but this was done at the Cleveland meeting and an association, known as the Chief Joint Car Inspector's Association, was formed to hold meetings once a year in the month of September.

Mr. Waughop, who had been chairman of the previous meetings, was elected president, remaining in that position until 1904. Since that time the meetings have been held as follows:

1900, at the Iroquois Hotel, Buffalo; 1901, at Great Northern Hotel, Chicago, Ill.; 1902, at Board of Trade Rooms, Omaha, Neb.; 1903, at Grand Hotel, Cincinnati, O.; 1904, at World's Fair, St. Louis, Mo., at which meeting I was elected president to succeed Mr. Waughop, which position I have held to the present time.

At this meeting the constitution and name was changed to the Chief Joint Car Inspectors' and Car Foremen's Association of America, as we thought by admitting the Car Foremen as members better results would be gained.

1905, at Hollenden Hotel, Cleveland, O.; 1906 and 1907 the meetings were held at Palmer House, Chicago, Ill.; 1908, at Cadillac Hotel, Detroit, Mich.; 1909, at the Brazell Hotel, Buffalo, when the name of the association was changed to read Chief Interchange Car Inspectors' and Car Foremen's Association of America.

1910 at Arlington Hotel, Washington, D. C.

Our meetings have grown from an attendance of the Chief Joint Car Inspectors and a few local car foremen at first, until we now have nearly 300 members, and I bespeak for the Association a very prosperous future.

I again wish to express to the members my appreciation of being elected your President for so many years and will say that I have always endeavored to give to the Association my very best efforts and feel that we have built up an association that is not only a credit to ourselves but to the roads, which we represent.

If in my efforts to do what I considered to be for the best interest of the Association I may have created a feeling with some of the individual members, it was not done with the intent of hurting anyone's feelings, I was simply looking out for the welfare of the Association.

I wish to thank the firms that have contributed to the fund for our entertainment, also the Entertainment Committees, not only of this year but previous years, for their untiring efforts to furnish entertainment for the ladies.

I again wish to thank the members, especially the officers, for their support, particularly Mr. Skidmore, our secretary, who has been most faithful in his efforts, and I feel if the Association conducts its business on the lines laid out, there is a bright and prosperous future before it.

The Mayor has arrived, and I will introduce to you Mayor Brand Whitlock, who is known to you and by people of all cities of the country as the "Golden Rule" Mayor.

Address of Mayor Whitlock.

Mr. President, ladies and gentlemen:

It is a great pleasure, I assure you, to come here this morning to convey to you the welcome of the city, and I should like to have you feel that I do this in a spirit that is not altogether official and not formal. While I do it officially and while I do do it formally, I should like to be able to make you understand and feel that to me it is a personal pleasure and a personal honor to appear before you. And I wish to inject into the words of welcome I shall speak a personal warmth and feeling so that you will understand that it is to me a personal pleasure to be the bearer of the welcome of the municipality to you.

I perhaps owe you an apology for having been late in arriving here this morning. I had an accident with an automobile. The inspection on the wheel of the automobile had not been perhaps as thorough this morning as it should have been, and about a block away from our home we found we were proceeding on a flat tire; so I had to stop and take a street car, and I came down the rest of the way on a flat wheel instead of a flat tire; that must account for me being as late as I am. It has been my experience in welcoming assemblies and in addressing assemblies that they are usually from three-quarters of an hour to an hour late, so I was a bit surprised to see that you men are so punctual. That is a fact upon which I congratulate you, and it proceeds and grows, I presume, out of that spirit of responsibility and untiring devotion to duty that has grown out of the labors in which you are engaged; that has grown out of the service which you are performing in this world. That is a service upon which I can congratulate you—upon which I can felicitate you. You have in your keeping a very precious object, as a result of your labors and dependent upon your labors are the lives of many people, and you in what you do from time to time are therefore making the most important—one of the most important—contributions that can be made to humanity.

I sometimes wonder if we really appreciate what is happening in the world today as a result of the improved means of transportation that we are enjoying. The world started out with different countries, different people, different nationalities, separate particular local, provincial; each thinking that his nationality, or his town, or his particular people were the best in the world. And that spirit of localism; that spirit of provincialism; that spirit of particularism is, as far as it has been allowed to exist in the world, one which has kept it back from the realization of the great ideals that the poets and saviors of the world have had for it. But by means of transportation facilities, those in which you are engaged and other kinds of transportation facilities, the world is being brought closer and closer together and the world is growing smaller, and as men begin to know know each other and understand each other their differences disappear.

I remember years ago when I was studying law, Senator Palmer of Illinois, a very able man in his day, said to me that he thought all the differences between men resulted from an imperfect means of expression; that if every man could tell every other man just what was in his heart so that he could understand it, that there would be no differences among men. And, as a result of the shrinking of the world, and the contact of people is making all the time for fewer and fewer differences—for a better and broader and deeper understanding among men. That brings us closer to the goal toward which humanity has been striving during all the ages and down all the centuries. And as having in your care then the lives of so many people; as having in your care so much property that is being devoted to this great service of bringing people together, I should think you would feel a very great pride—a very great honor in what you are doing.

You are assembling from all parts of the country to discuss your work, and the methods that are to be applied for the improvement of your work. This is entirely in harmony with the spirit of the age—with the spirit of organization—with the spirit of co-operation, which is to spread wider and wider until we shall achieve finally that great brotherhood which should be achieved by all people of the human race.

The chairman very kindly referred to the Golden Rule in his

introduction of me, and of course you will understand that in a city that has been associated somewhat with the golden rule there are no keys; there are no walls; there are no gates. The gates of our hearts and homes are open to all of you, and it is in the spirit of the Golden Rule that we welcome you here to the city this morning. It became known as the Golden Rule City, not through anything that I ever did, but because there was one time a very great man living here by the name of Sam Jones. He was a naive and simple man. He took the Golden Rule literally, just as he took the Declaration of Independence literally. He was so simple in his faith and childlike, and in the midst of a situation which has not accepted the Golden Rule literally, and the Declaration of Independence literally, he did take it literally and he tried to treat men as his brothers. I have often thought it was somewhat of a reflection upon our civilization that a man could become famous simply by believing in the principles on which we are said to have founded our government and our religion. But that is a fact, and the spirit of that man has spread about this town and around the world a very beautiful sentiment, and that spirit has dwelt here among these people, and for that reason they are specially hospitable to people.

Without taking up your time any longer I wish to say to you all, ladies and gentlemen (in my philosophy of life the ladies are included) I wish to say to you that you are very welcome. I trust that your meeting will be very agreeable to you, and when you go away you will feel that we have been able to do you some good and I wish you to understand that you have done us a great deal of good in coming here.

President Boutet: As president of the association, I feel unequal to the occasion. We have with us the silver tongued orator from Buffalo, Mr. O'Donnell, who we feel will always help, us as on previous occasions, and I would call upon him to respond to the cordial address of the Mayor.

Mr. O'Donnell.

Mr. President, your Honor, Mayor of Toledo, ladies and gentlemen:

I thought I would escape the watchful eye of our genial president this trip but it seems that sitting down there with Mr. Waughop of St. Louis he got me. On behalf of the association I wish to apologize for the annoyance caused when you entered the room. We had a gentleman who I believe is connected with your municipality, a Mr. Paine, and I want to say that he did not leave any pain in my system after he got through. He is all right.

Speaking for the association, it would be fulsome talk at this time to say that we appreciate fully and sincerely the very hearty and kindly sentiments you have expressed to us who have come from different parts of the country to participate in this convention. And I wish, sir, to thank you in a true sense, if you will accept it from us humble people and assure you that we will do our best to carry out the spirit and sentiment of the Golden Rule idea. That is, to do unto others as we wish to be done by. We have thus far seen very little of your beautiful city on Lake Erie, but I think the ladies especially will be given an opportunity to appreciate fully the sunlight and the magnificent buildings of this beautiful city of two hundred and fifty thousand souls.

I wish to say to you and to Mr. Stark, and all your associates in this city on the lake, as a citizen of Buffalo, at the other end of the lake, that we fully appreciate your cordial sentiments, and we trust that our actions while we are in your midst and when we leave you will merit the confidence of you men who are here today. I thank you.

And thereupon an adjournment was had until the ladies were given an opportunity to retire from the room, when the convention went into business session.

Secretary Skidmore read his report as follows:

Receipts	$714.76
Disbursements	454.65
On hand	$260.11

President Boutet: It is the duty of the executive committee to examine the books of the secretary-treasurer and report at one of the metings. I trust they will do so.

Before commencing with the rules I will say that I had a communication from Mr. McMunn, one of the members of our executive committee, from New York, saying that he regretted very much that he would be unable to be with us.

It was moved by Mr. O'Donnell that the voice of the association be couched in a telegram to Mr. McMunn. Carried.

M. C. B. Rules Read by Mr. Stark.

PREFACE.

1st paragraph.

Mr. Smith: Inasmuch as the preface makes the car owner responsible for repairs necessitated by ordinary wear and tear, can we charge the car owner for air hose with label worn out?

Mr. Stoll: In answer to Mr. Smith I would say that in transit, yes.

Mr. Smith: Is that what is being done? Are we billing the car owner where the air hose label is worn off so that we cannot tell as to its size?

Mr. Gainey: I cannot agree with the man from Toledo. I cannot see any place where the label would become worn in ordinary service. I cannot see that point at all.

Mr. Farber: Where air hose becomes defaced, you will find nine times out of ten that the air hose is porous and should be charged to the owner.

Mr. Shultz: Inasmuch as an air hose on a car offered in interchange in which the size has been worn off or rubbed off so that it cannot be read, is cardable, it seems to me that the only way that we can conduct the interchange in the future to protect the delivering line, is to remove this hose and bill the owner, unless it should be ruled that ordinary inspection would determine that it was the proper size of hose, it seems to me it would be necessary for the executive committee, or the arbitration committee to rule that a hose having M. C. B. dimension, although the size had been obliterated, should be passed in interchange. It would be necessary to bill the car owner in order to relieve the delivering line.

Mr. Stoll: The label on air hose is part of the hose and if the hose is bursted in transit it is charged to the car owner; if the label is worn out in transit, it would be charged to the car owner.

Mr. Curran: It seems to me that an air hose that is worn out or obliterated in the manner that the gentleman described, does not necessarily interfere with the safe running of the hose and I do not think it ought to be taken into consideration.

Mr. Gainey: That would leave too much of a loop hole. What would stop the men throughout the country from rubbing that plate off so that you could not tell. That had been done on the 1¼ air hose, and if you are to continue doing that you would get back into the old rut.

President Boutet: I think there is a misunderstanding of the question. If you had a car on your line with a badge plate so worn out, could you remove it and charge to the owner. He did not say anything about interchange.

Mr. Millburn: You are previous on this question. I think the discussion on hose should be left until we reach that rule.

President Boutet: I believe the point was well taken by Mr. Smith. He asked you a question that will not appear any other place in the rules. It isn't a question of interchange. It is a question of worn out hose.

Mr. Smith: It is not the hose; it is the badge plate.

Mr. Barber: It has already been decided by the arbitration committee and the executive committee, and we have nothing to do but follow their direction. If the badge plate is worn they will not allow you to stencil any information on the hose; neither will they allow you to patch the label. There has been some good work done in patching the labels, but they will not allow that. The label is worn out by the ordinary night and day working inspectors. They wet their thumbs and in the winter use the heel of their fists, and it does not travel through many interchange yards before it is worn out and the hose is worn out; and whether we would take it off on the middle of the system or not, is a question.

Mr. Hodgson: All railroads are buying 1⅜ hose at the present time, and it appears to me that nearly all the equipment should be now applied with 1⅜ hose. We have had an experience with the labels becoming loose and coming off altogether. I do not feel that that hose should be removed because the label is gone. I do not believe there is an inspector in the country today but who can tell a 1⅜ hose today without looking for it. With the continual rubbing it soon wears off, and I do not believe we should make them chargeable to owners.

Mr. Wymer: I do not believe we could properly charge the hose to the owners simply because the label is defaced without other imperfections. The subject of interchange is not to be considered here.

Mr. Shultz: That wasn't the question, but it comes in connection with this. The first question is, is a hose that had a worn out, defaced label, when offered in interchange, a cardable defect, if it does not show the size; and that being a fact, I cannot see why the delivering line should bear the responsibility of the car owner.

Mr. Hodgson: When it comes to the question of interchange, that is a different proposition. When a car is in the middle of interchange point, the label is defaced and loose and the hose is in perfect order otherwise, I do not believe it should be changed and charged to owner.

President Boutet: Do you believe that air hose with the badge plate so worn from service that the badge plate would be worn out, would give all the service that we could expect out of it?

Mr. Pifer: My view of this matter is that ordinarily an air hose badge that has become defaced, has usually performed its service. I think if the matter would be looked into, you will find that nearly all cases where a hose badge has become obliterated that the air hose is worn out.

Mr. Curran: The fact that the air hose would become defective by the badge plate wearing off does not in my mind interfere with the hose in the least, for the simple reason there is also a badge plate on there shows the date of application and date of removal, and when you cut that off you practically obliterate, and in the sense that this gentleman talked of, you would practically weaken the hose; but in my opinion, such is not the case.

Mr. Smith: I move that it is the sense of this meeting that hose with worn out badge plates are chargeable to the car owner except when offered in interchange.

Seconded by Mr. Stoll.

Mr. Barker: That is directly in opposition to the Master Car Builders' rules. It goes to say, if the car is offered in interchange with damaged label, it should be passed in interchange, and as far as the general run of railroading is concerned I do not believe that the inspectors on the interior points examine the hose only as to whether it will stand 70 lbs. pressure. We do not have inspectors enough to examine the badges on the hose; we leave it entirely to the interchange inspector. **And I**

think we should give it as the consensus of opinion that the ordinary night and day inspector should not examine the badge

Mr. Pifer: In connection with the motion just made, I feel that we would be doing wrong in making that a delivery company defect. If the car is defective at any time, why not make it at all times. If I understand the motion, it would make it a car owner defect, except when offered in interchange.

Mr. Faeber: I feel that the railroad companies are paying for a large part of hose that they had not ought to. If there was more care taken in giving the hose proper tests, they would find that the majority of them are porous, and instead of charging to the delivering company, they would have to charge to the owner. I do not think that the railroad companies are given a chance in paying charges for these old hose.

The question was put on the motion and lost.

2nd paragraph.

Question: Are we to understand that improper repairs are cardable immediately, or should they be taken up from joint evidence cards.

President Boutet: If you are asking that question personally, I will answer it personally. The time the repairs are made is the time the M. C. B. defect card should be put on; then you relieve the interchange points. If a person makes wrong repairs before the car leaves the repair track, you should put an M. C. B. defect card on covering those repairs. If there is any one in the room differs from that, I would like to hear from him.

Mr. Barker: I would like to take the sense of this meeting as to what an inspector shall do if his car arrives home with a repair card on from a delivering line that bears the information that they made improper repairs, and it does not carry a defect card. The rules are clear that a defect card shall be applied at the time the repairs are made, and what is the sense of this association in regard to that. Has a man a right to refuse the car, if he finds it with improper repairs without a defect card?

President Boutet: That brings up another question. We will discuss this question first. Is it proper to put on a defect card at the time the wrong repairs are made, or will the car go home and a defect card be given?

Mr. Stoll: The rules provide for that very plainly; they state that the party making the wrong repairs should apply a defect card at the time the repairs are made. Therefore it would not be necessary to demand joint evidence when the car got home if the car were properly carded with a defect card.

Mr. Smith: It is my opinion that where repairs at owner's defects are made and bill rendered that a defect card should be applied. It would not be proper to mark a repair card, no bill, when the repairs were owner's defects. Therefore, if he made repairs of owner's defects, he would necssarily have to bill and put a defect card on in addition.

Mr. Eubanks: We turn in our repair card and make no bill.

Mr. Smith: Only for delivering company defects.

President Boutet: A car that was repaired by you with owner's defects is marked on the repair card "No bill." That card is liable to be lost, and when the car reaches home the owner will demand joint evidence card.

Mr. Eubanks: What I wanted to say was if we made improper repairs and on account of them being improper, though they were owner's defects, we would mark it no bill, on account of improper repairs.

President Boutet: Wouldn't your company be responsible for the wrong repairs they had made if they were traced to your company?

Mr. Eubanks: Not for owner's defects.

President Boutet: Suppose you have a Big Four car on your line with a 10x12 bolster, you put in a 10x11; they get joint evidence and they trace it to you. If you come back and say you made no bill, they would want to know why you did not carry out the rules.

Mr. Eubanks: We might attach our repair card.

Mr. Stoll: In that case the owner might assume that you had the car in an accident and did not bill it and would give joint evidence.

Mr. Eubanks: If we put a repair card on and mark it no bill on account of wrong repairs?

Mr. Berg: The gentleman refers to rules 87, 88, 89, 90 and 91. They cover this argument. If you comply with the instructions there you would know what to do and you would not get in wrong. In reading our minutes it will convey to our officials and others the impression that we do not know our business when we really do.

Mr. Hill: I am a young man in the business and I have not had a great deal of experience, but in making repairs for owner's defects, whether I do it right or wrong, you may depend upon whatever I do upon that car, I am going to bill for. That has been my idea. I would follow the rules. I should put a repair card on and defect card for the wrong repairs I made, and if the repairs are wrong I should put an M. C. B. defect card on; but the owner would certainly pay for what I did on the car.

Mr. Curran: My view on that matter is that for owner's defects in making wrong repairs it is not necessary to put on an M. C. B. defect card, but mark the repair card "No bill." That seems to be the practice all over the country, and I do not see anything in the rules that require us to put on an M. C. B. defect card.

Mr. Hodgson: If a car is repaired in the New York Central and they apply a wrong coupler they do not put on any defect card for wrong repairs. There is no repair card on the car and the car arrives on the Grand Trunk. The coupler that is standard to the car is broken or is defective and the inspector orders the car on the rip track. That coupler is removed and they haven't one like it, so they apply a coupler in the other end of the car the same as the New York Central has applied. The inspector really does not know whether that is wrong repairs or not.

Mr. Chapman: I have had a little experience with this question of wrong repairs. I have always found that the closer I lived to the book of rules the better I came out, and if I make wrong repairs, even though it is the car owner's, it is my duty to place upon the car a repair card and bill the company. I also place upon that car at the time an M. C. B. defect card, showing the wrong repairs made. In regard to this gentleman who just spoke about the coupler, the majority of the cars are stenciled and the inspector or car repairer cannot go wrong. If he puts a 5x5 shank in place of a 5x7, he should card for wrong repairs.

Mr. Gainey: In making wrong repairs for which owners are responsible, the superintendent of motive power would get after some of these fellows if they did not make a bill for the repairs so that when they put an M. C. B. defect card on the car, their bill would offset the bill. If you put an M. C. B. card on there and mark "No Bill" you are at a loss of the owner's repairs which you made.

Mr. Eubanks: Rule 89 leaves it entirely optional with the party making the repairs whether he billed for them and put on a defect card or not.

Mr. Berg: Isn't it a case where no bill applies, where you make repairs where combinations exist, or damage in rough usage. There you mark it "No bill," but at any other time you issue a defect card.

President Boutet: Before we go any farther, I would like to have somebody move that it is the sense of this meeting that it is proper in making repairs to foreign cars to bill the owners for owner's defects and put an M. C. B. defect card on if they make wrong repairs.

Mr. Schultz: I haven't any objection to making the motion. But if we proceed along the lines that we have here for the last half hour and discuss the whole book on the preface, we will get in wrong. I move you that we defer the matter of wrong repairs until we arrive at Rule 87.

Mr. Trapnell: That closes the subject until it comes up farther along. The matter I wanted to talk on was the application of a defect card to a car for wrong repairs. The man who made the repairs at all times don't know it is wrong repairs and could not know it is wrong; therefore he is justified in putting a repair card on and letting it go through without a defect card. A car comes on the repair track for two broken draft timbers; they are old; he measures them up and finds they are 7¼ by scant 4, he applies a 4x7, or 7½ timber; when it comes home to the owner he says "The standard to my car is 4½ x 8. The man who made the repairs made them in good faith that they were standard; therefore I do not think you could censure the man. I do not believe you can apply an M. C. B. defect card to a car stating that he has made wrong repairs, when in his own mind he has made standard.

President Boutet: The way this matter was brought up it appeared that there wasn't any case of that kind. The man who made the repairs knew that they were wrong and he should put on a defect card.

The question was put upon the motion and carried.

Rule 2.

Mr. Trapnell: I do not see why the word "should" is in there. Why shouldn't it be "must."

Mr. Barker: The rule does not say "should not." If the word "shall" was in there, it would be much more positive than "should."

Mr. Gainey: If the Big Four were billing a cut of cars to the Queen & Crescent at Cincinnati and a car left the Big Four with the safety appliances all in good condition, but got over in our yard with one broken, it surely would not be taken back again.

Mr. Schultz: I hope that this word "must" is now understood. We have been interchanging cars at various points of the United States, running them on record. In last year's rule it was "it shall be;" this year it is "must be." In think this association should go on record as understanding that the Master Car Builders intended that defect cards shall be applied at the time the cars are interchanged. The Master Car Builders never said that we should use the United States mail, or any other way of applying a defect card, but that the defect card should be applied to the cars.

Mr. Barker: From the understanding that the gentlemen have of that rule, when a train arrives at interchange points we must put on a set of inspectors to inspect the train and put on cards to all the cars that have delivery company defects if we take it in interchange, and my understanding is that the majority of the railroads wont stand for that extra expense. You will have to put on extra inspectors.

Mr. Schultz: The majority of the railroads are back of the Master Car Builders and Superintendents of Motive Power who made these rules. Whatever is necessary under these rules to do to card a car at the time it is interchanged, will have to be done, as I understand it. It is authorized in the rules.

Mr. Smith: I agree with Mr. Schultz, and it is my opinion that when we have a car with a defect for which the delivering line is responsible, a defect card should be attached at the time the car is interchanged, except as provided for in the second paragraph of Rule 3 which says: "Defect cards shall not be re-

quired for any damage that is so slight that no repairs are necessary." The receiving road, I understand is the judge.

Mr. Wymer: It is my opinion it was the intention of the Master Car Builders last year and this year, that a card should be applied to a car at the time of interchange. And from the fact that they are not doing it in Chicago, it should not be inferred but what there are many people there who believe that it should be applied. I know Mr. Schultz' opinion on that very well and he is a live wire on the subject. However, he isn't the whole thing up there and cannot always have things as he would like to have them. I believe that in order to get the results that should be obtained by applying a defect card, it should be universally practiced. It is rather a burden upon one section to be required to comply with this rule and have it ignored throughout other interchange points. It is my personal opinion that as soon as the railroads comply with this rule, they will find it a great relief in interchange matters. It will dispense with a great deal of clerical work, and it has many advantages which I think will be readily seen, if this rule is enforced.

Mr. Pendleton: Mr. Shultz said our managers were behind the rule, but I feel that our managers will more readily excuse us for ignoring the rules than they will for delaying business or increasing the expenses. If we are going to have to put defect cards on, I do not think there is a line represented but whose expenses will be greatly increased; and if the expense isn't increased and they attempt to, I do not believe we are going to be able to comply with the rules, if we do not increase the expense.

President Boutet: Let me ask you a question. If the same interpretation of the rules prevails in Maine which prevails in California and the middle States, and we lived up to these rules strictly, you know that it would only be a short time until every car that bore a defect for which the delivering line was responsible, would have a defect card on, and it would not be necessary to delay that car in interchange. The principal trouble is in the different interpretations in the different portions of the country. A person in San Francisco will say, "There is a car that ought to be carded." It goes to Maine and they say it should not. There is not many defects for which the delivery line should be carded against if you look at it in a proper way. It would not require any more time than to make a record of it.

Mr. Shultz: Those of us who are at the bottom of the ladder have no right to interpret these rules any way except as they read. Our executive officers make these rules and we ought to carry them out, and then if we are wrong they will tell us.

Mr. Kipp: It would be my opinion that there would be more or less defect cards on cars and to make that card available at the interchange points it would be necessary to have an inspector hunt the car all over to find out whether it was carded or not. If he found it were carded he might not be able to read the card without turning it over. It would make expense. Most of our railroad managers want us to interchange cars with the least possible expense. As soon as we go to increasing the expense and holding up cars at interchange points, they say right away: "There is something wrong with that fellow. We tell them about the M. C. B. rules reading that all cars offered in interchange must be carded, and they say that if the car is safe to run they want it to go and if we cannot interchange it they will get somebody who will.

Mr. Shultz: In order to make it more pliable the Master Car Builders have reduced the cardable defects, in order that cars may not run around the country that have slight defects carded. They have specified that if it is safe to run it can go and should not be carded. That being a fact, it reduces the cardable defects to repairs that have to be made, and if they have to be made, they will be made, and there wont be as many defective cars traveling around.

Mr. Curran: I made a recommendation once to our company that if it had been adopted universally, it would have been a great benefit to interchange and would have obviated a great deal of delay. The rule is in effect at St. Louis that cars having defects that do not exceed a certain limit, for instance $2.00 would not be considered a cardable defect; would be owner's work. If that rule were put into effect today there would be very few cars that would be carded.

Question: I would like to ask Mr. Shultz what is being done in Chicago in regard to the new scheme at the stock yards?

President Boutet: I believe it would hardly be fair to ask a man for something that they are doing in Chicago in an open meeting. We come here to discuss M. C. B. rules and the proper interpretation of them. What we must and must not do is printed in very plain form. What is the need of trying to evade? There isn't a man in the room but knows that the holding up of cars in interchange will be of short duration. It won't be long until some car passes a point in interchange. It is the duty of the inspector to card that car. When a car is once carded there is a record made of the card just as well as we can make a report on a sheet of paper. If the rule is lived up to universally, it is a matter of short duration.

Mr. Hill: We have the word "should" in the first paragraph and "must" in the second. The word "should" carries its penalty with it because it is a violation of the Interstate Commerce laws, and it is optional with the man. In the second place it says that I must put an M. C. B. card on and it is your business to see that I do.

Mr. Shultz—I move you that it is the sense of this meeting that the proper interpretation of the second paragraph of this rule is that M. C. B. defect cards must be applied for all cardable defects at the time the cars are interchanged.

Seconded and carried, with but two dissenting voices, that of Mr. Waughop and Mr. Barker.

Mr. Campbell—This question of cars offered in interchange will bring up a question in our country; whether they are in a serviceable condition to load, or whether they are in a serviceable condition to move. There are lots of cars in a serviceable condition to move, but would not be considered so to load. The rules provide for the height of the couplers. You have a variation of three inches, from 31½ to 34½. An empty car at 31½ is not in a serviceable condition to load because when you load it, it will be brought down to the limit. The question has been brought up in our section of the country and I would like to have it decided. What has been the practice with regard to receiving empty cars at 31½ inches and would the receiving line be justified in loading them?

Mr. Hodgson: I believe that rule is very plain. It says they must be accepted if in serviceable condition. The receiving road is the judge. If the receiving road considers that it is unfit to load, they have no right to receive it. The inspector does not know whether it is to be loaded or is enroute home, but if he considers it is not fit to load, I believe he has a right to reject it.

Mr. Chapman—This does not say anything about loaded cars. It says empty cars. We are not delivering a car supposing some other man is going to load it. If it is in a serviceable condition to move I believe we have a right to receive it.

Mr. Wymer—I do not see any material change in this rule from last year. Last year it read "cars," which referred to both loaded and empty; and this year the word "empty" was placed in there, and it applies just the same on empty cars. On loaded cars there has been a change.

Mr. Barker—We are in the situation of receiving light empty equipment to be loaded with iron ore and pig iron, and our experience is that 31½ when empty is not safe. We receive it to load and it is a difficult matter to keep the shipper down to the limit, and we have to be very careful that the light equipment is high enough so that we are not under penalty. We have a right to refuse it.

Mr. Stoll—I believe the Master Car Builders in their convention have made mention of the backward movement of cars. If a car comes to you with a coupler too low there is nothing to hinder you from repairing it or making it standard height. Anybody can make repairs to anybody's car and bill them for it, and I do not believe that the backward movement should be allowed.

President Boutet—The intent has been to forward the movement of cars wherever possible. They have increased the owner's responsibility in order to keep the car in service. We have got to be governed by the Master Car Builders' rules as they read and there isn't any rule in the book that is going to cause as much dissension as this one.

Mr. Stagweich—Rule 20 in the old book and under "coupler" in the new book says that it must not be less than 32½ inches. So it gives us an inch. If it is less than that it must be adjusted.

Mr. Millburn—I would like to know if an empty car would be considered in a serviceable condition, if it were full of refuse.

Mr. Campbell—The stand that I have taken up north is that a car 31½ inches is serviceable to run if the delivering line does not know whether it is going to be loaded or not. Under the safety appliance act it is safe to run, and if the party that receives the car wants to load it he has a perfect right to raise it to the standard and bill against the owner. But I wanted to find out what the practice was, whether other places were objecting to receiving the car unless it came up to the sufficient height for loading.

Mr. Livingston—The practice of the Hocking Valley at Toledo on a car offered in interchange is that it may be 31½. And if the car is going to be loaded our inspector will order it to the repair track and we will make a bill against the car owner to put it up to the standard height. I do not think this rule refers to any refuse that might be in a car. It is a matter of the physical condition of the car.

Mr. Stark—I would like to ascertain how the matter is handled at other points. A car is delivered to a road for a return load. The empty car contains a lot of sugar beet refuse; should that be considered a car in safe and serviceable condition?

Mr. Shultz—It seems to me that this rule gives the receiving line an option to do just as it pleases with the matter. If a car is tendered for lading that is unfit, you have a right to refuse it. It is entirely optional with the receiving line as to what it will do with it.

Mr. Forest—I want to rise to a point of order. We are getting away from these rules all the time. We are talking about the height of a car, and now you come in with refuse.

Mr. Wymer—I believe that under these rules, if a car is offered in interchange with a draw bar 31½ inches, the inspector would have a perfect right to reject the car, if he so desired. It is a matter optional with him because the rules provide than an empty car should be better than that. I believe that if the car is offered for grain lading, the inspector has a right to reject it. I am an advocate of onward movement of a loaded car, and repairing an empty car instead of loading it. I believe one of the great faults in delaying loads is due to the fact that our inspection is too lenient on empty cars. I believe that when a car is offered in interchange for a certain service, it ought to be fit for that service when offered, unless the receiving line so elects to receive that car and repair it.

Mr. Livingston—I do not believe that an inspector always knows what it is to be loaded with; but you must accept the general condition of that car and pass on it, whether the car is safe to load or otherwise. If it is a matter of refuse, that is a matter that is provided for between two lines.

Mr. Chapman—This man wants to know how other roads are handling cars with refuse on.

Mr. Boutet—That is not a proper question just now.

Mr. Stark—I think it is a proper question. We have cars offered to us, and we are trying to determine when they are in a serviceable condition, and it seems to me that it is a proper question to ask whether a car containing a lot of refuse is in a serviceable condition or not. I do not know where in the rules we would discuss it, if we did not discuss it here.

Mr. Wilcox—Wouldn't the traffic department have something to say in regard to refuse in a car? What has a car inspector to do with refuse in a car?

Mr. Shultz—I think that it is proper to receive an empty car that is fit for the lading for which it is intended, the receiving road to be the judge. It is my idea, when a car is tendered for a certain purpose, and if it is fit for that purpose, then it should be accepted.

Mr. Kyle—The capacity is marked on the car; if it is marked 50,000 it is supposed to carry that, and if it is not fit to carry that the inspector should look at it.

Mr. Shultz—If the Pennsylvania tenders a car to go to Minneapolis for flour and the car is unfit for the lading, it should not be accepted.

Mr. O'Donnell—You are acting directly in opposition to the rule. I would like to offer an amendment to Mr. Shultz' motion that it is the sense of this body that the third section of Rule 2 means that all empty cars must be accepted in interchange, subject to local conditions, in order to expedite the movement of freight. What might apply to Chicago and Cincinnati might not apply to other points. I know the operating department is very anxious to have cars go forward instead of backward. I know that is the sentiment of the operating officials in our association, and there are certain local conditions that we can patch up among ourselves to overcome the backward movement of cars. Inasmuch as all these defects are mostly chargeable to the car owner, we ought to pass along on that rule and not pick it to pieces.

The amendment was seconded and carried.

Mr. Stokes—The question of refuse in cars is not a mechanical defect and it does not belong to the mechanical department. It is a transportation matter altogether.

Mr. Kipp—Our line received a lot of empty cars for loading containing refuse, sand, gravel and all sorts of things. While the gentleman on my left says it is up to the transportation department, they generally do not have facilities to inspect for such things as refuse in cars; they do not do it, and it is up to the car inspector to have the car in shape to deliver. We have had instances where it cost us $6.00 or $8.00 to clean the refuse in the winter time. And as far as the N. O. & W. are concerned they do not receive cars with refuse. The cars are sent back to the delivery line to be cleaned out.

Mr. Barker—Loaded conditions control a good many times in regard to rubbish. It is a delivering company defect. The Pennsylvania has decided that they will not receive any car with rubbish and they are not receiving them.

In regard to what commodity would require a clean car, up in the Adirondacks the D. & H. owns some very valuable iron ore mines; they grind it and use the waste water to wash the ore. They deliver the ore 97 per cent pure and they load it in coal cars. The cars have to be swept and the joints patched, sometimes lined with paper or cement. It requires clean cars. The anthracite coal requires cars as clean as passenger cars.

Mr. Stoll—The Master Car Builders' rules do not mention anything about cleaning cars. Local conditions ought to govern that, and we ought not to waste our time with the cleaning of cars at this time.

Mr. Singleton—The word "serviceable" refers to the condition of the car wheels and the running gear. The transportation department or the traffic department do not have representatives at interchange points, but they expect you to look after that, and if there are any cars received with refuse, who do they go after?

Mr. Stark—I raised the question and I am satisfied with the result. It is interesting to hear our friends state that it is a transportation matter. When our friend Stoll decides when it shall be cleaned, I am satisfied.

Mr. Stoll—We have four or five roads in Toledo that will not pay any attention to the orders of the chief interchange inspector and the other roads will abide by it. The biggest roads in Toledo have said they would not pay any expense for the cleaning of cars.

Mr. Smith—Under paragraph 5, what redress would the delivering company have for cost of transfer necessitated by defects. Is the delivering line chargeable with the cost of transfers as per A. R. A. Rule 15?

President Boutet—Yes.

Mr. Smith—Or does that apply in cases where the cars are improperly loaded?

President Boutet—In both cases.

Mr. Shultz—It is a question in my mind if that should be confined to the lading of a car. There are a great many railroads transferring cars on slight pretenses, making no attempt to repair them, and if they were compelled to fall back and require the delivering line to pay the expense, they would transfer a good many more. It seems to me that A. R. A. Rule 15 has reference to a car where the lading must be rearranged or transferred.

President Boutet—We endeavor to work under A. R. A. Rule 15 in Cincinnati. If the defects can be repaired with the load in the car in ten hours, we do not transfer. If they cannot be repaired, we give a transfer order against the delivering line. If the car is too high or too wide, it is up to the receiving line to receive that car and transfer it at its own expense.

Thereupon an adjournment was had until afternoon.

Tuesday Afternoon Session.

Mr. Pendleton—I would like to ask if it is the consensus of opinion that we handle transfers strictly under A. R. A. 15, or M. C. B. Rule 2?

President Boutet—I do not understand that the way we are working abrogates either of the rules. We do not consider that the rule was intended to transfer a car for a defect that could be repaired while the car was loaded in reasonable time, if it would only take 10 hours to repair it. It would cost more to transfer it.

Mr. O'Donnell—We have no right to catechise rule A. R. A. 15. As we understand it, the insertion of that rule was to overcome the backward movement of freight. Local conditions govern the defect of cars, and it should be taken care of locally.

President Boutet—I do not so understand it.

Mr. O'Donnell—I think you will agree with me that the delivering line will give a receiving line certain loads that require the application of draft bolts, etc., and you might hold the car fifteen or twenty hours. We might say that it was much cheaper to transfer the lading. There are local conditions that ought to govern, and I think A. R. A. Rule 15 is put in to govern the backward movement of loaded cars. I think we are wasting time by going into local matters.

Mr. Curran—Who is going to decide when it becomes necessary to transfer a car and we have only two inspectors. That is where these rules are lame. It is all right in Cincinnati where they have an arbitrator. We are working under A. R. A. 15, and we have cars transferred and sent back to us, and we never put a hammer on them and they come back again sometimes.

President Boutet—If you have two inspectors who cannot tell whether a car is safe or unsafe, you had better employ a joint inspector and put him in place of the two.

Mr. Curren—You know that you as an arbitrator have decided this question between two men. If we did not take these opposite views there would be no necessity for an arbitrator.

President Boutet—You overcome the same difficulty by putting a good man in there and paying him the salary you are paying the two.

Mr. Curran—It is not only between these inspectors, but it has to be settled in the general office. A fellow will come in for the transfer of a car at a local point. The company will object to the bill. They will say that their inspector said that that car should not have been transferred, and they will show by the record that the car was put back into service without any repairs; it brings up trouble in the general office. We have it every day.

Mr. Shultz—What I want to talk about is the attempt to return a car back to the delivering line after you have transferred it. If it is in a dilapidated condition they say "You had better get a home route card." And there is nothing in these rules that compels them to take that car back after the transfer.

Mr. Andrews—Isn't it a fact that when you transfer a car that the delivering road pays for the transfer. If that is the case that car has never been received by the receiving road and why shouldn't we take it back.

Mr. O'Donnell—There is a rule governing that.

Mr. Shultz: It is a fact. Here is a car we transfer for three or four broken sills. After we get it back it has low coupler. They will say: "It has penalty defects; we cannot accept it"

Mr. O'Donnell: I believe he is trying to put back on some fellow a car he damaged a little bit more after he transferred it.

Mr. Shultz: They never get any better when in bad order.

President Boutet: You would transfer the car and find it unsafe to handle back to the delivering line; wouldn't it be fair that you should strengthen it so that it would be safe to go back to them?

Mr. Livingston: Would you bill the car owner or the people who delivered the car?

President Boutet: If I had a car delivered with three broken sills, it would be a combination of defects for which the delivering line was responsible. I would charge the delivering line for any necessary work that would strengthen that car to get it back to them. If it were owner's defects, I would charge the owner.

Question: You would ask for a defect card for the material and labor getting it back to them?

Voice: I would look upon that as being temporary repairs and George would have to stand the expense.

Mr. Faber: If it is a delivering company defect, you can charge the delivering company for the temporary repairs you are making to strengthen the car; but I would like to know how you can charge the owner, if it is owner's defect, for temporary repairs. I have always found that where you made temporary repairs you could not charge the owner.

Mr. Elliott: Do I understand you to say that if I deliver a car to the M. P. for three broken sills, they transfer the car in place of repairing the broken sills, you would give them authority to bill me for shipping the car back?

President Boutet: If you delivered the car at Cincinnati I would do that. Our rules require that we shall deliver cars if safe to go to the transfer track. I would protect the receiving line as far as combination of defects is concerned.

Voice: You could transfer it and put the sills in if you desired.

Rule 3, Paragraph 2.

Mr. Faber: I think there should be some understanding as to what we would call "slight."

Mr. Shultz: Any defect which does not interfere with the safe operation of the car or its contents and is safe to trainmen ought to be passed. I do not believe that slight damage on cars any more than slight damage on buildings or anything else, ought to be paid for unless its usefulness is affected.

Mr. Pendleton: I do not agree with Mr. Shultz. If the side of the roof leaked, you could break one side of the car in; that would not interfere with safety.

Mr. Smith: As I understand it the receiving line still remains the judge, and in view of that fact the rule is very plain.

Mr. Wymer: There always has been a difference of opinion about how far we should go in carding cars. In some localities they are very much closer than in others, and it is placed in the rule to discourage the practice of asking for cards for minor defects; but I do not believe there can be anything outlined that is going to formulate a uniform opinion in regard to that. It is to discourage asking for cards for slight defects.

Mr. Shultz: I have a recollection of a great many defect cards being issued where the wheel would come in contact with the sill—not interfering in any way with the strength of the sill and to discourage such practices as that is what the rules are intended for. A scraped side is also what causes a good deal of trouble.

Mr. Livingston: I believe it should be understood by the inspectors what they should card a car for, other than when it should be necessary to renew the parts when it got home. The inspector knows about what his people would renew, and he ought to know what a receiving inspector should demand from a delivering road.

Mr. Barker: This is leaving it to the judgment of the local inspector and it is going to make more trouble than most any part of the rules. With some roads, if the whole side of a car is raked, they will not card for it. Under these rules it is not necessary for the protection of the load, if the whole side is raked, and that road may be desirous of keeping up the condition of their equipment and they want a card for it. And under this paragraph it is going to make many disputes until the inspectors are educated up to it.

Mr. O'Donnell: That is just what I was going to remark. In the next thirty or sixty days we will know better. I feel confident that we will have an arbitration decision before long, and they will explain it very thoroughly so that we will understand it.

President Boutet: It ought to say how far we should go. I am under the impression that no cards should be given for any car that the damage was so slight that it would not interfere with the lading that the car was intended for.

Mr. O'Donnell: I think if it is an 80 or 100 car, the owner or the receiving line would be perfectly justified in asking for a card.

Mr. Shultz: I move you that it is the sense of this meeting that slight defect, damage to sill, sheathing, or any other damage that does not require repairs, or does not interfer with the safe operation of the car, be not carded in interchange.

Seconded and carried.

Mr. Pendleton: I think it would depend a great deal upon the instructions the inspector got. Let us all agree when we go away from here that we will get our inspectors together and impress them so that they will all understand that rule.

President Boutet: Your remarks are just exactly right, but some of us are working under superiors. We can agree as to what is the proper interpretation, but we have to have their consent to put it into effect. And if our superiors give us their consent to do that, those are the instructions that we will give the inspectors.

It was moved that Rule 4 be laid over until we come to the rules mentioned in it. Seconded and carried.

Rule 5.

Mr. Shultz: I want to impress upon the members the importance of instructing the inspectors whenever possible to fill out the defect cards on both sides. There are a great many written with indelible pencil and the weather affects them.

Mr. Acker: Talking for the Toledo Terminal road, a line that handles all its business on switching charges principally, I agree with Mr. Shultz, that it is simply impossible to make anything out on defect cards providing they do not write on both sides of the card. We get cars from all over the country, and it is one of the greatest difficulties to read what the card is for. If we can take the card off and turn it over we have no trouble.

Mr. Shultz: The rule calls attention that the original card should be of card-board. A number of roads have taken it upon themselves to get up a card of very thin paper, and inasmuch as we know they are to be on the cars in the future, we should use our influence in discouraging the practice. In accordance with this rule, you would not have to accept it if printed upon thin paper.

President Boutet: We do not have that condition prevailing, but if we did I would call on delivering line to return that paper. If it were a car enroute I would not take the action, but the place to take the action is at the first point that the car is delivered in interchange. We all know that it should be card-board.

Mr. Hodgson: The rule says it should be of card-board; it does not say it shall be. I do not think we have any alternative.

Mr. Shultz: Should and shall mean the same thing in these rules. If this is only a recommendation on the part of the Master Car Builders, it seems to me it ought to be carried out.

President Boutet: In my mind there isn't any question but that it must be card-board. In no place in the rules is it referred to except as card-board.

Mr. Barker: There are some roads that pay a higher price to get a finer grade of paper, and what are these roads going to do? And the outside man, if a car comes to him with a lot of this thin paper on specifying the defects. We want to go home and tell the inspectors that they should refuse the card unless it is of card-board. It has left the impression on my mind that that is what we are going home to say.

President Boutet: The association took no action. Unless there is a motion made we will proceed.

Rule 9.

President Boutet: Some understand that it must be shown on the repair card; others on the bill.

Mr. Barker: That is governed by the rules. It says it shall be made in duplicate and triplicate.

Voice: I move that the name of the road and date when the triple valves were cleaned be stenciled.

Motion seconded.

President Boutet: The question is how you are going to show the information.

Member: I do not see the necessity of putting it on the repair card, but according to the rules we must stencil it on the auxiliary reservoir.

Mr. Gainey: On the side of the book it says: "Use of the repair card." And it undoubtedly means that it must be shown on the repair card. That was discussed at the Master Car Builders' Association and they said that the reason they wanted it there was to check the man up who had cleaned the car previous to the time he cleaned it.

Mr. Stoll: The beginning of Rule 9 is very plain: "The following information must be shown on the repair card." And it includes the entire Rule 9.

Mr. Shultz: In order to show that information you will have to put it on the cylinder. It carries with the point some of the men are trying to bring out. You will have to show where the cleaning was done and by what road.

Mr. Curren: That is the way I look at it. It is the intention to stencil the name of the road, so if bad work is done, they can show where the work was done.

Mr. Charles Stark: I move you that it is the sense of this meeting that it should be not only stenciled on the cylinder, but the information shoud be shown on the repair card. It is plain enough. The owner gets a bill; he knows who does the cleaning, but the second man does not know who previously did the work.

Motion seconded.

Mr. Barker: If I clean the air on a car and do not stencil it, and in thirty days from now it is on some other road and is cleaned and they do not find any stencil mark on it, how is he going to tell? Shall he be refused because the second man cannot tell that I have cleaned it thirty days prior to that?

Mr. Kyle: When you clean your own cylinder, do you want a repair card on it?

President Boutet: It is very essential when the owner cleans it that he stencil it to keep others from cleaning it and billing him.

The motion was carried unanimously.

Rule 10.

Mr. Charles Stark: We might all understand that but I believe it is an essential point. It is a question of where and how a man would gauge it. Ordinarily a man would think he would just gauge the outer thickness, but the rule doesn't say so. The only proper way I think of getting it with a square is to get your proper thickness at the base line. It means dollars and cents to your company.

President Boutet: It is a very essential matter, especially to people running steel tires on freight cars. There is a great deal of variation in its understanding.

Mr. Hodgson: I think that can be done with a pair of calipers. A pair of wheels removed will be sent to the shops for turning and the man who makes the repairs must be able to say at once how much steel is to come off of the old wheel. With a pair of calipers he can get the proper dimensions.

Rule 12.

Mr. Shultz: This is one of the best rules that the Master Car Builders made at the last convention. I hope it will have the result of keeping joint evidence cards from going back through the mails after inspection. As I understand it, such joint evidence as has been secured by sending through the mails is prohibitive, and that the signing of joint evidence by a joint inspector or by an inspector working for a car owner, or any other inspector working for a railroad, is all that is necessary, but it must be after actual inspection.

Mr. Pendleton: Do you mean that one party must represent the owner and the other the delivering line?

Mr. Shultz: Not necessarily. Any car inspector will do.

Mr. Pendleton: It says, one representing the owner and the other the delivering line.

Mr. Shultz: One representing the owner of the car and the other representing a railroad company.

Mr. Andrews: I would like to know if this inspection is to be made at the time the car is delivered home to the owner? We have had a great deal of trouble with this condition in the West.

President Boutet: I would judge the condition must be inspected at the time. It might be on a delivery track or interchange track of the other road.

Mr. Andrews: Where a Southern Pacific car goes home to the Union Pacific and we are asked to make a joint inspection with the delivering line at Omaha, and the U. P. claims that the S. P. is an affiliating line, we do not consider the S. P. car at home at Omaha, because we deliver to the U. P. at that point. Would you consider that the U. P. had authority to make joint inspection with an S. P. car home at that particular point?

President Boutet: Joint evidence should only be signed when a car is delivered to the owner.

Mr. Trapnell: I would like to ask a question relative to the signing of joint evidence, whether or not the same can be signed after a car has moved in interchange; supposing that at Chicago the Santa Fe would receive from the C. B. & Q. a card for a

wrong axle, too small for 70,000 capacity; would have a 60,000 capacity axle under the same. The car moved on the Santa Fe line to Kansas City and the defect was found. It is marked to their repair track. Would a joint inspector, or any other inspector have the authority to sign joint evidence?

Mr. Shultz: I would say that they have. Joint inspection does not have to be made at the time of interchange.

Mr. Curren: It is my opinion that that is the meaning of this rule.

Mr. Trapnell: That was a matter that was brought up in a discussion at the Southwestern Car Foremen's Association at Kansas City. We came to the conclusion that we could not do it, and that the car had to pass directly in interchange, thereby enabling him to sign joint evidence. After considerable discussion we decided we would take it up with the chairman of the arbitration committe, Mr. Hennessey, and he said technically in accordance with the rules we would be right, but I believe it would be a mean man who would not sign a joint evidence that these repairs were wrong. He merely states that these repairs were wrong and it is then up to the railroad company to get their protection from the party who made the wrong repairs. I find you can sign joint evidence for any wrong repairs on any car and at any place or time with the owner.

Mr. O'Donnell: What limit will we give the owner to say that the joint evidence should be signed. The owner might have a car on his line six months in continual service. I think there should be some limit according to common sense. I do not feel that we should let the owner have a car on his line two or three months and then come up with a lot of improper repairs that might be made by the owner. I would refuse to honor joint evidence on behalf of the delivering line.

Mr. Trapnell: The party making the wrong repairs would be the only one that was responsible.

Mr. O'Donnell: Do the owners always admit that to be true. I do not think a man working for 12 or 15 roads has any authority to sign joint evidence with no report at the point of interchange three months afterward.

President Boutet: I am like the Buffalo man. If a car came in on one of the lines at Cincinnati from some point on their road; they would call me to give joint evidence, I would sign a statement that such and such repairs were wrong, and they could do with it what they pleased, but I would not consider it worth the paper it was written on. If they received the car and did not detect the wrong repairs and they run it, I believe it is up to them.

Mr. Shultz: I know it is the practice to get joint evidence and it has no effect at all. When a railroad company gets joint evidence for wrong repairs they ought to make the repairs, under the old rule. The signing of joint evidence has absolutely no limit to it. There may be 10 or 15 joint evidence for the same defect.

Mr. Waughop: The owner of the car is supposed to have an inspector who knows his business. I cannot agree with Chicago. When a car is offered in interchange at St. Louis with wrong repairs of any description, the evidence of the joint inspector is taken there. The one month, or three months afterward, don't go. The rule is very plain. Joint evidence should be given at the point of interchange and nowhere else.

Mr. Eubanks: You cannot collect unless you could prove that they made the repairs, so what is the difference where you have the joint evidence.

Mr. Shultz: I wanted to correct St. Louis. All inspectors know their business, but the railroads do not correct wrong repairs, but continue to get joint evidence, and what they do with them all, I do not know. A defect card is the remedy for wrong repairs.

Mr. Barker: Joint evidence cards were put into force by the Master Car Builders to protect the owners, and the owner can only be protected once for one improper repair. He has no protection whatever unless some person bills him for it. What good would it do for the owner to take 12 or 15 joint evidence cards for the same repairs. I do not see why any one should refuse to sign joint evidence if the fact is that the improper repairs existed; the owner has no proctection unless he finds the fellow who made the improper repairs.

Mr. O'Donnell: Do I understand Mr. Barker to say that it would be right for an interchange inspector to give joint evidence on hearsay for the sake of the owner getting it.

President Boutet: He did not say on hearsay.

Mr. O'Donnell: We have a proper check on all joint evidence furnished. It is up to the receiving line to show the record of the original joint evidence. With me there is no joint evidence furnished unless a good and sufficient reason is given and there is personal inspection.

Mr. Wymer: We have been discussing M. C. B. rules having in mind the principle of keeping cars moving, and as I see this rule, there is a wise provision to that end. We all know when to secure a joint evidence card. At the time of interchange it very frequently requires a delay to a car. Sometimes the points of interchange in the large terminals are several miles apart, and in order to get the evidence at that particular time, it may mean considerable delay to the car. As I understand this rule, the owner of the car may secure the joint evidence any time, anywhere on his line by simply calling in a representative of some other road; no matter whether the car interchanged at that point or whether it interchanged six months prior. But I believe the intention is to keep the cars going and after the joint evidence is secured nobody is hurt except the man who made the repairs.

Mr. Trapnell: I agree with the gentleman. They are all talking about signing joint evidence at the time the car is interchanged. There isn't a word in the rule that says anything about the interchange of that car. It merely says that the owner and inspector of a railroad company can sign the joint evidence providing he has made a personal examination. There isn't anything in the rule that requires that it be offered in interchange before we sign joint evidence for the wrong repairs on a car. If you satisfy the inspector that these repairs are wrong, he can sign the joint evidence when you state the facts. He does not burden any one with that statement except the man who made the wrong repairs.

President Boutet: I presume you call to mind a meeting here in March of the Executive Committee when it was recommended by Mr. McMunn, one of our executive committee. Mr. Schultz stated that the C. B. & Q. did not demand any joint evidence for any repairs that they were not going to make. If it were asked for that way, we would have very little joint evidence.

Member: We get them for a bolt upside down. It is not necessary to move a car in interchange to get joint evidence.

Mr. Curran: To show why this matter has come up, we have a case on our road. They made several repairs to one of our steel cars and among other things they put two drop doors on the car. They did some other wrong work for which we got joint evidence. When the car reached Chillocothe, we found that the trap doors were wrong and would not go in between the openings. The card showed that all the repairs were made at the same time. We asked the inspector to come down and make joint evidence, before the rules went into effect and he refused to do it. That is what we want to cover in these rules. For instance a party will do a lot of work on a car and all of it will be right except the draft sills; the object is to show that these draft sills are wrong.

Mr. Gainey: I do not agree with Mr. Trapnell on that rule. It says the evidence of a joint inspector, or the joint evidence of two inspectors, one representing the owner of the car and the other representing a railroad company. It has got to be a joint inspector at an interchange point, and that covers the whole thing.

Mr. Shultz: For sake of convenience it is stated that a joint inspector who represents both roads may sign this joint evidence; for sake of further convenience if a car is discovered at any point on a railroad company right-of-way, that they may then call in any inspector working for a railroad to sign joint evidence with them. I cannot make myself believe that the joint evidence must be signed at the time of interchange.

I move that it is the sense of this meeting that the signing of joint evidence at the time of interchange is not necessary, according to Rule 12.

Seconded and carried.

Rule 14, par. 2

Mr. Smith: I would like to know when the journal boxes or contained parts are referred to, whether it is necessary to show the end of the car in addition to Ll, etc.

Answer: It is not necessary but it would be good practice.

The following telegram was read by Mr. Stark

H. Boutet,

Boody House, Toledo, O.

Impossible for me to attend your convention. Our road will be well represented by a number of members. Trust meeting will be successful and of interest to all.

F. W. Bazier.

Rule 17.

Mr. Shultz: The only new items in this rule are that it permits the use of fir or oak in splicing longitudinal sills.

Rule 18.

Mr. Gainey: The Car Foremen at Cincinnati decided that there was only one M. C. B. standard coupler and that is one that cuts off from the top and center. I cannot agree with them. I claim that any coupler is an M. C. B. standard coupler as long as it conforms to the M. C. B. specifications, with the exception of the cut off.

Mr. Hitch: They have adopted the top lift coupler as an M. C. B. standard coupler.

Mr. Barker: The Master Car Builders have not adopted any.

President Boutet: But they have adopted the form as to the cut off.

Mr. Gainey: If I take a side cut off Gould coupler from a car and put in a top cut off, I can charge the owner of the car, but if I take off a coupler with top cut-off, then I have to stand the expense of putting in a side cut off. That is all the change I can see in the M. C. B. coupler.

Mr. Barker: One of the members thinks that a light car measuring 31½ inches ought to be refused. Doesn't that bring it within the scope of the Federal law, if it is down below 32½.

President Boutet: I believe the government says 31½.

Mr. Wymer: It says the empty car should be adjusted. We have had a good many take the position that we could adjust that ¼ of an inch higher, but I always felt that we couldn't, because we come in contact with the law.

President Boutet: I do not think an interstate inspector would pay any attention as long as the coupler was not over or under ¼ inch.

Mr. Campbell: I know that they do take objection to it. They tell us that the limit is between 31½ and 34½ days. If it is ⅛ of an inch below it is not right.

President Boutet: We have never found one that raised any objection to anything within ½ inch.

Mr. Hodgson: I do not believe that it is the sense of this meeting that we are allowed to go over ¼ of an inch above or below.

President Boutet: Strictly speaking, no.

Mr. Trapnell: The new safety appliance laws say that the

minimum shall be 31½ and the maximum 34½. I do not see how we could go above or below.

President Boutet: They would have to have a level track to put it on to measure it.

Rule 21.

Voice: This, I understand, is to provide for owner's defects.

Mr. Burns: I have heard it argued that we could put a running board on a coke car and charge the owner.

President Boutet: Is one of the hopper cars as safe to go over as a box car with a running board and no protection?

Mr. Burns: No, but I think we are within the requirements of the law.

Rule 23.

Mr. Barker. I would like to ask whether you could change a 36 inch, or a 40 inch wheel and apply a 33, and it would be proper repairs?

Answer: That is what the rule says.

Mr. Barker: I can apply a 33 inch wheel and make it practicable.

Mr. Pendleton: I would like to ask the gentleman if he would be willing to accept his car if a man had to put in a 7 inch block in order to get his bolster?

Mr. Barker: I certainly would object.

Mr. Faber: The rule is plain. I do not think there is any argument on that.

Rule 31.

Mr. Barker: Do we understand that we should charge the owner or the man who issues the defect card?

President Boutet: I do not think there is much question.

Rule 32.

Mr. Lynch: Isn't there some confliction with Rule 3—the receiving line to be the judge?

President Boutet: I cannot see. It was the sense of this meeting this morning that no defect card should be given for any defect or damage so slight that it was not necessary in order to protect the lading.

Mr. Lynch: What is the object in having it carded, the receiving line to be the judge, when we have these same words in rule 3?

President Boutet: I am unable to answer why they put it in there and did not in the other.

Mr. Eubanks: I would like to refer to the practice of carding for metal end sills on steel cars. We have considerable demand from the L. & N. on cars principally issued at Cincinnati where they call for a defect card for dented metal end sill. We have been accepting them on what they call the old Cincinnati agreement that they do not necessitate repairs. Am I right in accepting them?

President Boutet: Are you sure that the cars were originally carded in Cincinnati or Louisville. I had that matter up and I found they was carded at Louisville and I requested them to take it up and they said afterwards they would not require any cards for any end sills that were not damaged badly enough to be removed. As far as furnishing rebuttal cards, it is owing to instructions. If a road receives a car and that road is compelled to card, I must furnish a rebuttal card.

Mr. Eubanks: We practice about the same thing. There are a good many of the sills bent and have been so for years, and it does not seem necessary to be taking a record, and why should they ask for rebuttal cards or defect cards.

Mr. Pendleton: In discussing Rule 3, as I see it, the only relief we can get under the new rule and get away from carding for slight damage, is by the education of our inspectors. We have got to get out with them and educate them to our interpretation of this rule. If we would all agree to do that, we would get some relief.

President Boutet: It was voted this morning that it was fair not to card any car which was safe to travel and to carry the commodity for any defect if it was not necessary to repair car.

Mr. Pendleton: I do not remember of a vote being taken that way. Mr. Shultz would not accept his own car without demanding protection.

Mr. Wymer: I do not think we can do better than to let the matter stand as it is. The rule is put in there for the moral effects it will have in discouraging the present practice of demanding cards for slight defects. I think, as Mr. Pendleton says, we should try to educate our inspectors to be a little broader gauge.

Mr. Pendleton: I think that we should have a limit, and should be in a position to say to our inspectors what they must cut out, and we would eliminate a great deal of carding. We should instruct our inspectors not to make a defect card or any record when the siding is slightly marked or the moulding raked a little bit. Fifty per cent of our carding today is done for defects of that kind that are never repaired. We should get together and say to our inspectors that we do not want that.

President Boutet: We should get together here and say what we are going to say is cardable.

Mr. Trapnell: The better way to arrive at that would be to have a committee to bring us in a list of repairs that our inspectors should be allowed to card for. I offer that as a motion that a committee of five be appointed to make a report.

Seconded.

Mr. Lynch: I do not see just what we can do even if that motion is carried. I could not take any instructions from this association as to what is cardable. We might get the opinion of this association, but as to putting it into effect, that would be another thing.

President Boutet: There are quite a number of us in the same boat that you are. If this association sees fit to say that it is the sense of this meeting that the power interpretation of a certain rule is a certain way, all that any of us can do is to take it home to our superiors and then take our instructions as our superiors sees fit.

Mr. Lynch: Even if the motion prevails, it will have no effect upon the majority because the instructions will be so vastly different. We all differ in our opinions on many matters and we will certainly differ in regard to what is cardable. I think if it is left to the good judgment of an intelligent car inspector, the thing would work out without going to that trouble.

President Boutet: If we said we would leave it to a competent inspector it would imply that we were not competent to judge and that we did not have as much judgment as the inspector.

Mr. Lynch: I beg your pardon. I think it is wrongly put. I did not mean to say that we did not have as good judgment as the car inspector, but the average inspector has just as good judgment as many of us in regard to such questions.

Mr. Shultz: The only good I can see is, we would get together and discuss the different items or things that are damaged on cars and express an opinion as to when such defects should be carded.

The question was put upon the motion and carried, the vote standing 44 in favor and 35 against.

President Boutet appointed the following to constitute the committee: Messrs. Pendleton, Shultz, Stoll, Charles Stark and Lynch.

Mr. Smith: I hold that rules 39 and 40 conflict.

Mr. O'Donnell: I think he is right.

Mr. Shultz: This is just an additional exception there. It says "or longitudinal sill, and damage"; it may have that in addition to it.

Mr. Lynch: There are two combinations in Rule 39; it requires the three articles and I agree that there is a confliction. There should be three items. The word "and" is substituted for "or."

Mr. Pifer: I do not see where there is any confliction. Rule 39 speaks of damaged end sills and goes on and mentions the other items which would form a combination had they been damaged at the same time.

Mr. Trapnell: I do not see where the confliction comes in.

Mr. Lynch: Under Rule 38, it requires three items, while Rule 40 calls for two items.

Mr. Waughop: I read that "Damaged end sill accompanied by damage to draft timber," one item; "Damaged end sill accompanied by damage to longitudinal sill" two items; "Damaged end sill accompanied by damage to either coupler body or pocket," three items.

Mr. Lynch: How do you understand Rule 38.

Mr. Waughop: That is simply a prelude to the other rule.

Mr. Pendleton: In rule 39 there are four combinations. What does it mean if it does not mean the end sill or coupler too? You have four combinations in 39. And then I would like to know what is meant by coupler pocket in a combination of defects?

Mr. Gainey: My interpretation of Rules No. 37, 38, 39 and 40 is as follows:

Rule No. 37: That it takes coupler body draft timber and end sill to form combination.

Rule No. 38: That it takes coupler pocket, draft timber and end sill to form combination.

Rule No. 39: That it takes end sill, draft timber, or longitudinal sill and either coupler body or pocket to form combination. What I mean is that end sill. draft timber and either coupler body or pocket will form combination, and that end sill and longitudinal sill will form combination as stated in Rule No. 40.

I do not think a damaged draft timber (or its sutstitute) enters into any combination of defects unless accompanied by damage to end sill and coupler or pocket.

Mr. Wymer: I am inclined to agree with the gentleman who first started the subject. There is a conflict. I have changed my opinion twice. It requires a damaged draft timber and end sill in order to form a combination with the coupler body.

President Boutet: It takes a coupler body, draft timber or end sill in order to form a combination. This "and" performs the same function in 39. I believe a damaged end sill accompanied by damaged draft timber, end coupler body or pocket is one combination; or damaged end sill accompanied by damage to longitudinal sill another combination

Mr. Barker: The point raised by Mr. Smith was well taken, not so much on account of the conflict as the intention of the language used. And I would move you that the rules on the combination of defects be referred to the committee that has been recently appointed, and that they bring in a report to us as to what are combinations under the various rules.

Mr. O'Donnell: I do not believe that committee should be given that. I ask that it be referred to Mr. Taylor to be placed before the arbitration committee and they will give us the correct interpretation. There is something wrong with the rules.

President Boutet: I understand your motion is that Rules 38, 39 and 40 be referred to Mr. Taylor?

Mr. O'Donnell: Yes, and if you see fit, 37 can be included in order to get the correct information.

Seconded.

Mr. Wymer: I do not understand why 37 and 38 should be included. The conflict does not appear there.

Mr. O'Donnell: You have three items to consider in 37 and 38. The word "and" in 37 throws you down.

Mr. Kyle: I do not see why we should include 37 and 38. They are plain.

Mr. Hodgson: I offer an amendment, that Rules 39 and 40 be referred to Mr. Taylor for proper interpretation.

The question was put upon the amendment and lost.

The question was put upon the original motion that 37, 38, 39 and 40 should be referred, and the motion was carried.

This was done and the following answer was received from Mr. Taylor, secretary of M. C. B. Association:

Mr. S. Skidmore,

Secretary C. I. C. I. & C. F. A. of A., Cincinnati, O.

Dear Sir: Replying to yours of Sept. 6th, the Arbitration Committee held a meeting here on the 12th inst. and instructed me to issue a leaflet changing Rule 40 to read as follows:

"Damage to two longitudinal sills, accompanied by damage to end sill."

It was thought that this correction would straighten the matter out satisfactorily. Yours truly,

Jos. W. Taylor.

Mr Pendleton: Before we proceed further, I would appreciate the information I asked for—"What is a coupler pocket?"

Answer: Anything that holds the springs and followers.

Mr. Hodgson: That is riveted to the coupler.

Mr. Shultz: Any device riveted to the coupler to which are enclosed the springs and followers.

Voice: We have had couplers in which the pocket was not riveted to the body of the coupler.

Mr. Pendleton: I have had a number of arguments where they claimed that the two minor lugs were pockets; they have insisted on cards where the minor lug is included.

Mr. Barker: Wouln't it be well to call this to the attention of Mr. Taylor. The mechanical drawings do not recognize any pocket. They have a yoke, and that is the official designation of the attachment for the springs and followers. The drawings sent out by the M. C. B. and their print book have a yoke which the Master Car Builders have adopted as universal. A great many questions are raised by men at the top of the ladder not using the proper terms.

Mr. Curran: A pocket is anything that holds the spring and followers and anything that holds the spring and follows in place in the way of a stem, is considered a stem.

Rule 43.

Mr. Curran: It seems to me that this rule governs the points that we had up to some time ago in regard to maintaining sills, etc.

Rule 45.

Mr. Smith: In case of open cars advertisements are placed on temporary stakes put in the pockets expressly for that purpose.

President Boutet: There has been quite a lot of contention about this. Some lines claim that an advertisment on a stake is an advertisement and should be so construed under the rule.

Mr. Chapman: The Pennsylvania has orders to accept any car with advertisements where the stake is in the stake pocket.

Mr. Bradley: We had requests at our place of interchange for defect cards covering such defects, and I refused upon the ground that the stakes were only temporary and it was not a cardable defect. Some roads hold that flat cars have no stake and if there should be advertising tacked on, it was a cardable defect but I refused to issue a defect card. The Pennsylvania has now issued orders that such defects should not be considered as cardable defects and no defect cards should be asked or given when cars are offered in interchange.

I move you that cars offered in interchange with advertisements tacked on temporary stakes or the lading, shall not be considered as cardable defects under the rules.

Motion seconded.

Mr. Smith: I had reference to a temporary stake put on expressly for the advertisement, where the stake does not protect the load.

President Boutet: It will not matter whether it is put in there for the protection of the lading or not, it is a temporary stake.

Mr. Barker: There are shippers in our territory that are putting on advertisements 2½ feet wide and 5 or 6 feet long. Wouldn't it be well if this motion prevails to amend it to be read that no part of the initial or number of the car should be concealed by the advertisement.

Mr. Wymer: The object of having this rule is to prevent the defacing of the car, and as long as they can advertise their business without defacing the car, I do not see why there should be any objection to it.

Mr Livingston: I believe Mr. Smith had in mind that the parties were tacking strips and putting on advertisements of different sizes.

Mr. Smith: No, I only had reference to temporary stakes placed in the pockets of gondola cars to support the advertising.

The question was put upon the motion and carried.

Rule 47.

Mr. Smith: I would like to ask if the delivering line is compelled to leave these chains on the cars?

Answer: No.

Rule 48.

Mr. Waughop: That is only prior to delivery in interchange.

President Boutet: Suppose it is in interchange.

Mr. Kyle: We have automobile cars with center posts composed of an I beam; is that a concealed part of the car?

President Boutet: In all cases it is not visible.

Mr. Waughop: It is a concealed part of the car.

Mr. Trapnell: I do not agree with him. You take a Cotton Belt automobile car or a Pennsylvania, and it is visible when it is closed.

Mr. Shultz: If the post were missing and the door closed the ordinary inspector would not detect the missing post. An inside or concealed part should not be carded in interchange.

Mr. Pendleton: On a Pennsylvania car it is very easily detected. When the post is in place it fits in that pocket.

Mr. Shultz: I do not agree with the Pennsylvania inspectors. There is not sufficient evidence to warrant them in taking a record of a missing post.

Mr. Curran: Then I consider it is not a concealed part.

Mr. O'Donnell: Isn't it a fact that the posts are taken out at the time the lading is in the car. When you remove these posts maliciously and throw them away, the owner should be protected. A center door post is bolted on to the small door with 5 or 6 one-half inch bolts. If they are missing, they certainly must have been taken off by some person; otherwise you might say that they are a part of the small door.

Mr. Shultz: I move that it is the sense of this meeting that center door posts on automobile cars are considered inside concealed parts of a car and not cardable in interchange.

Motion seconded.

Mr. Dunn: That question has been considered in the last few weeks in Chicago. The center door post on Pennsylvania cars is made of 3x5 I beam, and when in place and the door closed it has been considered by the committee that investigated it, that it is not a concealed part. Besides it is a concealed part only because it is missing. When the post is missing and the door closed, the pocket is not concealed. It is empty. We should not deprive the Pennsylvania railroad of proper inspection. I want to remind this association that it is required to follow the rules as written and enforce them as they are intended to be enforced.

Mr. Lynch: The question is not whether it is concealed. It is admitted that that portion of the post cannot be seen when the doors are closed. The motion is that it is considered an inside part of the car.

President Boutet: Inside and concealed, is the motion.

Mr. Barker: I assume that the committee possibly took into consideration the automobile cars, when providing for inside and concealed parts. An inspector can readily see if the posts are missing. The owner of the car should be protected, and we should not pass any motion here that will put us in conflict with the arbitration committee and the executive committee of the Master Car Builders.

The question was put upon the motion and the motion was lost.

Rule 52.

President Boutet: A man at Atlantic City told me that if a car was equipped with U. S. standard and so stenciled, and if one of those appliances broke, you had five years to repair it. I do not understand it that way. It must be repaired immediately after or it is a penalty defect. After it is once equipped, it must be maintained under all conditions. That was my answer.

Mr. Barker: That depends upon whether the car is stenciled. It is a penalty defect for a railroad to move it if it is stenciled.

President Boutet: If a car is equipped with ladder irons and one of them is broken, it is a penalty to move that car as much as if it was stenciled.

Rule 56.

Mr. Stoll: This morning we passed a resolution that worn hose label was owner's defect under all conditions. Why not worn out hose?

Mr. Smith: It seems to me that the motion I made this morning was lost; that a label worn out was not chargeable to the owner, and I do not see why it should not be as well as a bursted air hose. We have to make an exception in interchange in view of this rule, and I believe it was on that account it was lost.

President Boutet: No, I do not believe the sense of the meeting would have been any different.

Rule 58.

Mr. Bailey: What are wrong repairs to air brakes and how should they be handled.

Answer: An H triple in place of a K triple. Difference in the price of the valve and difference in operation.

Mr. Barker: It should be carded.

Mr. Shultz: It is not cardable in interchange but the owner should be reimbursed for the change.

President Boutet: I believe we decided this morning that whenever you put an H triple in place of a K that you should put a card on at the time you make the repairs. In interchange it would be a case of joint evidence.

President Boutet: Here is a road that wants to put on a quick action triple, and the other road puts on the old style. I believe the owner should be reimbursed and they should put on an M. C. B. defect card. If the car were offered in interchange joint evidence should be given if delivered to the owner.

Mr. Pifer. We have had a good deal of trouble with that for the past year and have been taking joint evidence each time, and we have been reimbursed in most cases by patching it up when the bill was presented for cleaning out the air brake. We took a joint evidence card.

Mr. Pendleton: Going back to the question we had up this morning on labels worn out on air hose—if the label is not shown on a hose and the car is offered in interchange, it would be a cardable defect. A worn out air hose offered in interchange is also cardable. I can protect myself against having them carded by making repairs of bursted air hose and charging the owner.

Mr. Pendleton: The question was whether we would be justified in making the repairs and charging the owner. It seems to me we would be compelled to make the repairs, or else we would have to stand for the card.

President Boutet: We understood it was not proper.

Mr. Pendleton: You see the position we are in. If we offer a car with a worn label, we would have to stand for the card. It seems to me that we should remove the hose and bill the

owner. This label is worn out and penalizes us for delivering the car, if it did wear out on our line.

Mr. Shultz: I agree with Mr. Pendleton on this. It is a question here whether or not railroad companies operating other railroad companies' cars on which the label becomes worn off or the hose defaced, so that we cannot offer it in interchange, it seems to me perfectly right to replace the hose at owner's expense, so that it will be exchangeable in interchange.

President Boutet: I cannot realize how a label is going to get worn out except in exceptional cases. A chain may rub it off, and if you will give the hose a test with soap suds you will find it porous and full of blubbers and you can charge the owner.

Mr Stokes: We remove a great many of them every day; some that have not been manufactured six months and the label is ready to fall off. The company is buying an inferior hose and the label wont stay on, and the man who puts it on should not be responsible.

Mr. Livingston: I support Mr. Stokes in that. The labels become lost. The hose seems to be all right, but it is a defective method of vulcanizing the badge plate; they come off on practically new hose. It is a defective method of applying the badge plate.

Mr. Pendleton: I can support both gentlemen. I have known of cases where the badge plate came off for some unknown reason. To dispose of it I move you that the matter be referred to Mr. Taylor, just as we have discussed it, and let him give his idea whether it would be proper to remove it and bill the owner.

Mr. Lynch: It seems to me that there must be some inferior hose. It is not frequently that we find any badge plates peeling off of hose. It occurs to me that the hose are not M. C. B. standard where the badge plate falls off that way. Any hose manufactured according to M. C. B. standard I think will stand any ordinary rubbing of the label because of its being vulcanized in there. I think it is the exception, rather than the rule, where we find a badge plate falling off of the hose.

Motion seconded by Mr. Shultz.

Mr. Livingston: I did not mean to convey the idea that the hose peeled off or that it seemed to get hard. We mean to say that the lift of the badge plate is taken from the hose; it simply is off of the hose, and in our opinion it is a case where it was not properly vulcanized to the hose.

Mr. Gainey: I do not think the badge plate being worn out if the hose is otherwise good, is chargeable to the owner of the car. Too many men are looking to billing instead of protecting themselves at interchange.

The motion was carried.

Rule 69.

Mr. Pendleton: It is ⅛ past the center the other dimensions are not required; or if it is ⅛ past the center, regardless of the length, it was carded.

Mr. Smith: If it is ⅛ past the center of the flange who is responsible.

President Boutet: If it is on the inside, the delivering company.

Mr. Smith: Suppose it is on top of the flange?

President: I expect most people, if the car was offered in interchange, would demand a card for it.

Rule 82.

Mr. Hodson: If there is a chip ½ inch extends through ⅛ of an inch past the center, does that condemn the wheel?

President Boutet: It has been so decided.

Mr. Hodson: I know inspectors who are not carding cars for that defect.

President Boutet: It is so thin that they do not think it can ever interfere, and it leaves the surface so smooth. I think a person should use his own judgment and not condemn the wheel.

Mr. Pendleton: The rules penalize the delivering line. If I run it in all probability I will be called upon to card it. I do not do it because I am afraid to let the wheel go.

Mr. Hitch: The way I read Rule 82, it strikes me that a chipped flange has to be 1½x⅛ past the center of the flange.

President Boutet: Yes, two conditions. That same condition prevails on both sides of the wheel and the arbitration committee saw fit to change that several years ago after lots of kicking on the part of car men, and I think with a little discussion and proper urging they will make it owner's defect unless the car has been in an accident. I think in making recommendations for changes to M. C. B. rules, the chipped flange wheel would be an excellent thing to make owner's defects.

Mr. O'Donnell: I believe that was recommended by some of the leading clubs.

President Boutet: It was recommended by this association several years ago. It takes at least three years before they are acted upon.

Thereupon an adjournment was had until Wednesday morning.

Wednesday Morning.

President Boutet called the meeting to order at 9 a. m.

Rule 85.

Mr. Smith: Under Rule 85 would an axle be considered scrap if it were increased ½ inch in length?

Mr. Eubanks: I would like to ask how it would be increased.

President Boutet: It would only be increased in length by the wearing of the front and back fillet.

Mr. Reed: I would like to refer to Rule 59. During the past year we have experienced considerable trouble with the salt water in refrigerator cars dripping down and eating holes in the pipes, making it necessary to renew them. Our company did not feel that it was necessary to bill the owner for the defect. Is it known as a defect or not?

Mr. Shultz: It seems to me it is owner's defects. The car was built for carrying that kind of a product.

Mr. Barker: It is up to the owner to take care of his drippings; if he wants them to spoil his train pipe he has got to pay for it.

Rule 88.

Mr. Smith: The question came up yesterday as to whether a card would be put on if it were owner's defect. It is well to put a defect card on in all cases, whether it is owner's or delivering line's defect, when we make wrong repairs.

Mr. Hewett: Yesterday as I understand it the company making the wrong repairs put an M. C. B. repair card on and the card marked "No bill." It should not be marked no bill at all.

Mr. Eubanks: A repair card marked "No bill" covers this case just as well as a defect card. I see no reason why a defect card should be put on and the company billed for these repairs, causing unnecessary work.

President Boutet: Yesterday it was decided to defer the discussion on Rule 3 until we reached Rules 87 and 88, and we have now reached that point.

Mr. Shultz: It seems to me that Mr. Eubanks understands that when he makes wrong repairs to owner's defects that he is entitled to bill on them. He can put on a repair card showing the repairs that he made. They will reimburse his company for the work that is done. He debits his company by putting on a defect card, permitting the owner to change it to the original standard, for which they will counterbill. In that way he will save the labor that he applies to the car on the original repairs. The way Mr. Eubanks looks at this I can see where he expects to be relieved from the penalty of making these wrong repairs from the fact that he does not bill the owner. He is right as far as he goes, but in so doing he penalizes his own company by not reimbursing him for the labor that they expended on the car.

Mr. Barker: The idea of the gentleman over there is to save clerical work, and I understand from what he has said that if he does not bill the owner, the owner has no redress, and the owner does not have to make a bill on a defect card, nor does he have the trouble of billing the owner. So he saves the office work and it seems to me that that might be a pertinent suggestion to the arbitration committee; because the mechanical department at present is overworked with clerical work, and the errors caused by billing owners.

President Boutet: I would state that the M. C. B. has had this same matter under discussion for a number of years. If you attempted to make repairs on a car of owner's defects but did not put a defect card on, did not make a bill and marked the repair card "No bill" it would lead to so many chances to confuse which the partial repairs of owner's defects have caused. They are having quite an amount of trouble, and it has been the one thing that has kept the M. C. B. from increasing owner's defects more than they have been by not following the rules. If we accept one rule we must accept them all. If we are unable to make repairs properly, put an M. C. B. defect card covering the defects. We cannot deviate from the rules. If we think it advisable to recommend a change in the rules, it will be all right, but until that change is made we are bound to obey the rule.

Mr. Smith: I can only concur in what has been said. I think Rule 88 covers this question enough that the company making improper repairs shall place upon the car at the time and place the work is done an M. C. B. defect card. I do not think there is any question on that.

Mr. Eubanks: Rule 89 appears entirely opposite. It states what you may do if you put it on and what you may do if you do not put it on.

Mr. Elliott: Suppose I get that car in our shop with the wrong repairs, what position will I take to get pay for what we do. I am not the owner of the car. The rule says that the company making the wrong repairs is solely responsible to the owner; who is the owner responsible to?

Mr. Shultz: It is a foreign car coming on to his repair track with wrong repairs and these parts broken. There is nothing to prevent the gentleman from making the proper repairs and billing the owner. He has no right to perpetuate the wrong repairs.

Mr. Livingston: I do not agree. If I would know that there was something wrong I would take it up with the owner and find out which was proper repairs. There are times when you cannot tell what are proper repairs, but you can take it up with the owner and if necessary he will furnish you a blue print. You have no right to maintain wrong repairs, but you can take it up with the owner.

Mr. Kyle: That is all well and good but suppose you have a loaded car on your tracks, then what are you going to do? It may take a day or a month to get the answer back from the owner. That is the position we are in.

Mr. Smith: I agree with Mr. Shultz. I think if a wrong part of a car breaks in fair usage we can charge the car owner. There ought not to be any argument on that.

Mr. Kyle: If you can do that that is all we want, but I do not see how we can do that. I had a loaded car come on the repair track, needing a pair of minor side castings, somebody had put in a short 11 inch side casting. The car had a minor draft and was so stenciled. We had to put a timber in the end that had the short pocket in. They issued an M. C. B. defect card. They had it a little more than a month ago under load, and we haven't the answer yet. We made the right repairs.

Mr. Kyle: We have dozens of cars running with 11 inch pocket, and I cannot see the necessity, because a car is stenciled, of going to work and putting in minor drafting. That is strong enough.

President Boutet: You have one of your cars equipped with a minor draft spring; somebody puts up a casting with a 11 inch pocket single spring; the draft timbers on that end again break; somebody else repairs it and they put up the same kind. Would you accept or reject those bills when made against your company?

Mr. Kyle: I would have to accept because the car went on the repair track in that condition. They did not make wrong repairs; they made the repairs they found. It was already carded for wrong repairs. I cannot see the necessity for two companies making wrong repairs.

Mr. Bradley: As I understand it so far, if I apply wrong draft timbers to a "Big Four" car, the road I represent will be strictly responsible to the owners for wrong repairs?

Answer: Yes.

Mr. Bradley: This gentleman here gets the same car on his repair branch a month later and reapplies draft timbers on account of the wrong repairs being broken. I have a perfect right to charge the Big Four for the wrong repairs on defect card. And if that defect card is on the car when he has it on his track and changes the wrong draft timbers, he has a right to charge the repairs on that defect card, has he not? Then he is responsible to the owner.

President Boutet: An M. C. B. card is good for its face any time the repairs are made.

Mr. Bradley: He has my defect card; he could bill on that. That makes his company responsible to the owner as I understand it; otherwise the owners get joint evidence and bill against the man making the wrong repairs in the first place, which he has a perfect right to do.

President Boutet: The question was brought up about making wrong repairs to owner's defects and not making a bill, and not putting a defect card on. That is what brought out all this discussion, so we are leading farther away all the time.

Mr. Hughes: I would like to find out why we put an M. C. B. repair card on.

President Boutet: He claimed that if you made wrong repairs to owner's defects, and put a repair card on and marked no bill, you did not have an M. C. B. defect card on.

Mr. Smith: I move you that it is not proper to make improper repairs to owner's defects, put a repair card on, marking the same "No bill" and not put on an M. C. B. defect card.

Motion seconded.

Mr. Hill: I want to know if there is a foreman representing any railroad here who will make any kind of repairs to owner's defects and not render a bill; is there any who make repairs of any kind to car owner's defects regardless of M. C. B. defect card or what not, and not render a bill, whether the repairs are proper or improper.

Mr. Shultz: I do not think there is a man in the room but who does that because the instructions are very plain, and I believe it is understood by all the railway foremen that that is permissible.

Mr. Eubanks: I will explain my posiion in the matter. I am somewhat overwhelmed, but the trouble that has confronted our people is that they have been in the habit of classing the two kinds of repairs together. In case they made repairs to delivering company defects, they put upon the car a card for improper repairs; and if they made repairs to owner's defects, they did the same thing and they never did render any bill. I want to get straight on the matter one way or another. It seems to be the opinion of the party that it is proper to make a bill and then apply a defect card. That all amounts to the same thing, but we want to get reimbursed for the work we do, especially where we think we are going to sign away the privilege of billing to the owner.

Mr. Pendleton: It seems to me it is compulsory for a man to make a bill on owner's defects and apply a defect card. When he marks it "No bill" he penalizes his own line. He is violating the rules. I believe if we all lived up to the rules we could get by them in trouble.

Mr. Curran: It seems to me that it would be superficial to apply an M. C. B. defect card for owner's defect, for the reason that the arbitration committee has decided that nobody can make these repairs but the owners of the car. I cannot call to mind the number of the decision, but I think the proper way to handle this would be through a committee who would look up the data and get it in the right number.

Mr. Bradley: Rule 87 says that the company making the repairs are solely responsible to the owner. The rule we are discussing at the present time says that when improper repairs on owner's defects are made and bill rendered, it does not compel you to render a bill but at the same time you are responsible to the owner. The only way I can see to handle that is to make a bill against the owner for improper repairs and apply a defect card, which will give the owners an opportunity to counterbill against the party making the repairs feel inclined to lose the whole amount of the bill. When a party makes wrong repairs and neglects to apply an M. C. B. repair card, can the owner make a bill against the party making the wrong repairs on the bill presented without joint evidence?

President Boutet: No.

The question was put on Mr. Smith's motion and carried.

Rule 90.

Mr. Alquist. How are car owners going to get protection under this rule? I had in mind a car we received last December with wrong draft timbers, wrong end sill wrong pocket attachment, two center sills broken and it had a wooden bolster in place of a metal bolster. There was no repair card on the car and no bill rendered. We had to change the car back to its original construction at a cost of $67.85; how are we going to get our money?

President Boutet: It is the duty of the car accountant to furnish you the movement of that car, and your superintendent of motive power can take it up and find out where the repairs were made.

Mr. Alquist: Arbitration case says the delivering line was responsible. 394 decision is still in force. What is to keep a man from making these wrong repairs, making no record and delivering the car to the owner with a defect card on the car amounting to hundreds of dollars and not saying anything about the repairs.

Mr. Alquist: How would a car owner get protection under Rule 90, if it would have to go to such an expense to get the car back to its original construction when somebody had made wrong repairs, simply because the man making the wrong repairs said nothing about the repairs made.

Mr. Alquist: We have been eight months trying to locate the party making the wrong repairs. We finally got the E. J. & E. to acknowledge making the repairs but denied the responsibility of the broken center sill; holding the Nickel Plate responsible for that. We finally got a partial card out of them. We did not get the credit of the scrap for the bolster.

Mr. Head: I think the gentleman will find that the decision quoted was rendered before Rule 94; that releases the delivery line for responsibility for wrong repairs made by somebody else.

Voice: I do not think there is any change in Rule 90; the rules provide a way for a railway to be reimbursed and there is no other only to watch your bills through the car accountant and find out.

Mr. Alquist: Do you always follow the rules in applying repair card and defect card?

Voice: Our men all have instructions to follow M. C B. rules.

President Boutet: Possibly some of us attending these meetings year in and year out do not realize the position the young man is in. We have quite a number of new members and these discussions bring out much good.

Mr. Stagwitz: We will take for instance a New York Central car has had wrong repairs way down West and the party making the repairs intended to slide the repairs in without applying an M. C. B. repair card; didn't want any money out of it nor pay anything for it; they delivered the car to the next road and the inspectors accepted the car in that condition, knowing there were wrong repairs, and found no defect card or repair with no bill on it. If there was a repair card with no bill, they could collect for the defect or bill against the company. The car finally is delivered to the Big Four. The inspectors also pass over the car, knowing the repairs are wrong, yet not going so far as to see whether there was a defect card or repair card on. The car comes to the New York Central and I say: "This car has had wrong repairs." The delivering line is responsible to the owner or to the company receiving the car. It is up to the Lake Shore to hunt up where they received the car from, and if they cannot do it, I believe the delivering company would be responsible in this case. If every man did his work, the owner would be protected in that line. I know I would not accept a car with improper repairs and no security for it.

President Boutet: I think we have a gentleman with us this morning who has been requested to give us a few remarks. Mr. Downing, Master Car Builder of the Lake Shore Railroad Company.

Address of Mr. Downing.

Mr. President and Gentlemen of the Convention:

I think there has been a mistake, gentlemen. I think you will all agree that a car cleaner was never cut out for speech maker. I cleaned cars here a good many years ago. There is a great deal for the car department to do; in fact, more now than ever. With the little light capacity cars that we had years ago, we had but very little difficulty in getting men to do the work. In fact the men we hired for car repairs were just a little more intelligent than some of us today. Hence they could go on and make repairs practically without any supervision. Things have changed; there are more complicated parts to cars, and the class of repairs that we have today, working with men we cannot talk to, are conditions that require better and closer supervision than we had a few years ago.

The parts that we have to put up today have changed. I recall when I worked on the C. H. & D. repair tracks in this city—I thought I was a pretty good fellow—I could pick up any one of the old C. H. & D. common draw bars and put it on my shoulder and carry it to the car. I have a picture of a man carrying a 5x7 today with a friction draft gear. Besides these men will not carry what we had to carry. You cannot say very much to them; if you do they will quit. It is a serious proposition and one which must have a lot of thought. It is a matter of education. There is no use to look for the big Swedes, German and Irish that we used to do the work with. You have got to do this work with a different class of men. I went into one of our yards a few weeks ago and tried to tell an oiler that he was not doing right and I was surprised to find that he could not talk English. I went after the foreman about it and he said: "Well, you will have to start a school and teach them to talk the language, or find some one else, because I cannot do it." That is probably drawing the line pretty close but it is really what we are up against.

Speaking of the complicated parts of cars, I took a drawing of the P. C. Brake equipment, and as I never was very much on the drafting business myself I got twisted up in about a half a minute. That is true of everything. I dare say you can go out and ask 90 per cent of the car repairers the function of a friction draft gear and he will not be able to answer. Perhaps a large percentage of our inspectors know very little about it. It is a matter of education. This is a feature the car department will have to look forward to.

I do not know how many have been as unfortunate as I have, to get into work without any education. It is a serious handicap. We have got to take our boys into the work and encourage them to make a study of our work. It is true you will hear men say that the salaries are not right. Perhaps they are a little low in the car department, but we try to size it up that all of us are holding our jobs because we cannot do better some place else, and whether our salaries are good or not, we should do everything we possibly can to boost the car men—the car department.

In the store business, you will see one man with a nice line of goods and he cannot sell anything, while a fellow with shoddy stuff is doing all the business. If we can put a thing like that over in our department I think the sales will come. But we have got to show. You take the most of us, we see a man sitting around doing nothing and we jump on to him pretty hard and tell him to go to work, but we walk right over $2.00 worth of material twenty-five times a month; that is money just the same as labor and should be watched closely. The education of the younger men in the car department is very important.

We should not feel that because a boy has a good technical education, that just as soon as we teach him the practice part of the business he is going to get our job. We should feel that he is going to keep our job. The more young men you get working for you the more you can be sure that you are going to hold your position.

Honesty is another thing. I listened to the discussion on the honesty of the repair man. If you are asked to do something that is not in accordance with the M. C. B. rules; tell the man who asks you to do it that you won't do it. Resign and make it known. The larger roads will be looking for you because they want honest men. I do not believe that there is a man in this hall who would make repairs and try to bill the owner, or rather bill the owner for repairs that are not made. He might feel that he had to do it. He does not. Any man who has nerve enough to say to his boss that he won't do a dishonest act and makes it known, will not have to work for such a road. There is always a better job for him.

In regard to inspection: We do not need any looser inspection than we have. I think we are just a little bit too loose. Some of the roads have gone so far as to buy some of the large mallet engines that pull the ends out of a car. They have put in a 400 special coupler to try to take care of this condition. Any of our cars going on these roads are liable to become weakened and come back on the other lines and cause trouble. I think we should all do all we can to agitate the condition that exists today on our freight cars. The doors are bad; the roofs are bad; the draft rigging is bad; with the older cars the ends are weak. It is difficult to get 300 cars out of 500 box cars for grain. Sit down along the side of one of the long trains and watch the draft gear pull off 3 or 4 inches from the bolster and you will think the inspection ought to be a little bit closer. And it isn't all inspection. It is trying to tell our superior officers the condition so that they will know. Put it up to them as it is and I am sure they will try to put up something stronger. We have spent a lot of money and we are keeping at it, and that is what we have got to do if we expect to keep the old equipment in the service. The large engines and the large power are here and they are going to stay, and they will haul big trains because that is what they make money on.

The Master Car Builders rules have been loosened up a little bit. We all agree that the Master Car Builders and Superintendents of Motive Power who have to do with the making of these rules are very conservative men. They do not like to jump at things. They take it quietly. I am very much in favor of handling the interchange under M. C. B. rules without any special or local agreements. I feel that that has been the trouble in the past; we have had too many local agreements. It has eased off at interchange points, and the Master Car Builders Association has not felt that any change was necessary. If we lived up to M. C. B. rules strictly and it interfered with the business, I am sure that they would make the necessary changes.

I want to go back to the car again. Years ago the car foremen and master car builders, whatever their title might be, designed and built their own cars. They do not do that any more. The manufacturers and designers criticise the design. I do not know about your roads, but we have only one or two men on the entire system who are able to criticise the design of a steel car. That is an awful condition to be in. We use men who have been brought up from car cleaners and car repairers, and who know but very little about the designing of cars. You have your steel passenger cars and steel freight cars, and I doubt if you could pick out five men out of twenty-five who could tell you the weak parts of those cars. I doubt if they could design a car. About all we can do today is to go and get the picture of some other fellow's car and pattern after it. If our boys get into this kind of work they ought not to be brought up that way. They ought to be taught the fundamental principles of the work of designing cars and in a few years the department would be so strong that the railroads and the management of the railroads would have to recognize them, and the salaries would come along when we are all right. The life and service of the cars and different parts of cars should be studied.

We have been making a little study of the steel coal cars. We find that the life of a steel coal car in the coal service is about 9 to 12 years; at the end of that time the floor sheets and hopper sheets have to be renewed. We also know that steel cars are designed with the idea that the sides will carry part of the load. After a car has been in service a number of years the inspectors have got to think how much of the load these sides can still carry. We have had several cars to go down in the center, due to the sheets being corroded. There are many things along that line that the management of the railroads want to know. We want to know what service we are going to get out of the solid steel wheels under freight cars, and we should make a study of these things and have the younger men study them.

I do not say this with the idea of tooting my own horn. On our division our foremen have about 27 young men inspecting cars —boys who are taking a drawing course in night school. This does not refer to the apprentice boys in the shop. We really cannot leave that to the workmen, because if we are working piece work the boys have to work into the system, they have to work piece work also, and the men as a rule do not like to take a boy and work with him. No matter what your percentage may be you have got to follow that up personally. We bring the boys into the office two or three times a year and talk to them; we ask them what they can make, and we found a boy who had been in the paint shop a year painting caboose desks; that is all he ever painted. The foreman is looking out for the output; he wants to get it out quick and he keeps the man there in order to specialize him. That isn't what you should do with a boy. The minute he learns to do one thing, push him along; then if you find one in the shop who develops quickly and you see that he is a general all around boy, shift him around. He is the fellow you want for foreman. Give him a general idea of everything. You cannot leave this to the workmen, and in many cases the foremen are prejudiced against the boys. Treat them like you would your own boys. They cannot be handled like men. They are just about like the old man that is ready to leave the service. You have got to talk to him kindly. With some boys it does not do much good to talk and sometimes the mother can do more to get the boy started right. Appeal to the parents before releasing the boy.

There are a good many things in the car department that the men who are qualified could tell you about. I feel that I do not need to go into statistics because I believe you know what it is costing. Some roads are paying as high as $75 per car per year, while other roads are only spending $30. It is either one thing or another. One road has too high a maintenance, or the other hasn't enough. When we had our old cars years ago the cost run along $45 a year. Now with the heavier cars, and heavier equipment, it is reasonable to suppose that the cost will go up. As to how much I am unable to say, but it will go up a good deal. The fellow who is only paying $30 with the modern car, isn't doing enough and probably getting into trouble on the road.

There is another feature that we are having trouble with on the two or more track railroads and that is the side doors. Single track roads do not have that trouble. They do not wreck passenger trains, and if a door falls off about all the damage done is to a switchstand. As all roads are double tracking, I think all car department work should be worked out along that line. The safety to passenger trains is very important and we have a good many injuries due to defects caused by defects to freight cars dropping in the track.

As I said before, the inspection does not want to be loosened. If you keep talking to your management and keep showing them the condition of your equipment, they will do as our management did; they made a very heavy cut in every department except the car repairs, and we are putting on all the men we can in that department. That has been brought about by the mechanical department on our line educating the transportation men up to what we need. I think you will all agree that the cars of this country are in need of repairs, and it ought to be talked and advertised. I do not say to advertise it to the fellow who can get it through with some legislation, but talk it to the management first and get them talking. I thank you.

President Boutet: On behalf of the association, I wish to sincerely thank our friend for his presence here this morning and for his words of encouragement. It certainly should be gratifying to the speaker to note the close attention given by all. I would call on Mr. Hodgson, Master Car Builder of the Grand Trunk, to answer some of the points brought out by Mr. Downing.

Mr. Hodgson: I do not think Mr. Downing's talk requires any comment. It speaks for itself. It does show to you and to me what a car cleaner can become. Mr. Downing started at the foot of the ladder and he is on his way to the top. And it is just such men we like to see at the top; men who know the business from A to Z. Not the technical man who receives his college education and goes into a drawing office. He learns to draw a picture, and it looks fine, but you give it to the practical man, it is not understood, and sometimes the draughtsman cannot read it or tell you what it is. If we will educate the young men; take them out of the factories and put them into our own drawing offices, they will make the best draughtsmen and the best mechanical engineers. When they send a blue print or sketch into the factory, the man who is going to do the work will know at once what is required. The work is facilitated and a great amount of money saved to the company he is working for.

Everybody knows what we are getting today in the heavy equipment, and everybody ought to know that the inspection isn't severe enough. Our discussion shows that we are handling cars with wrong repairs, and on account of wrong repairs, further defects develop. Where is it going to end. It is just such men as Mr. Downing who have been raised from the pit and taken their part in the inspection in the yard, that we want on our repair tracks. It goes to show that with a little education, a little night study, that any one of us can become a master car builder or a president of a railroad. Look after the boys in the factory and see that you have boys that you can put through the educational departments. Railroads now are picking out the best of their draughtsman and giving them college educations. What for? To better the railroad.

Mr. Downing speaks of carrying a draw bar years ago. I did

that same thing, but I could not carry one of the heavy couplers today.

I think I have said all that is necessary. I think Mr. Downing should feel gratified for the manner in which he was received this morning, and I am sure we all feel grateful to him for the address he has given us.

Mr. Stark: It is particularly fitting to have Mr. Downing with us this morning, especially to the Toledo delegation, for I have known Mr. Downing for a great number of years. It shows us who are in the car department—sometimes we feel that we are in the right church and the wrong pew, but Mr. Downing's case, as has been stated here today, is the result of merit properly rewarded. And I would move you that a rising vote of thanks be given him for his presence here this morning and for his talk.

Seconded and carried unanimously.

President Boutet: It is very gratifying that I can say to you that we extend to you a unanimous vote of thanks, and hope to have you with us during the remainder of the meetings.

Discussion Resumed.

Mr. Hewitt: I would like to ask him why he would throw the car back on the Lake Shore.

Mr. Alquist: I was the one who brought up that question and I would like to move that it is the sense of this association that when a foreign car, accepted by an intermediate road with evident wrong repairs and not owner's responsibility, that that car should be rejected or held until the proper repair card or defect card is applied to that car.

President Boutet: It would be unfair for me to put the motion. It is directly in conflict with M. C. B. rules.

Mr. Sternberger: The intermediate road does not know at all times what are wrong repairs.

Mr. Alquist: I said "evident wrong repairs."

Vice-President Trapnell Takes the Chair.

Rule 99.

Mr. O'Donnell: I move that we dispense with reading the items and prices unless some one has something to say on the prices.

Mr. Fisher: What is a labor charge for a spring hanger—any kind of a spring hanger.

Mr. Eubanks: What kind of a hanger?

Mr. Fisher: We have reference to the U-spring hanger—metal side beams pin over the top.

Mr. Curran: I do not think two hours would be enough. I think 10 hours would be a proper charge. You have got to let the car down, and if it is loaded the job is more hazardous.

Mr. Kyle: Isn't it the spirit of the M. C. B. rules that we charge for the actual time consumed in making repairs where we have no price. Even where we do have a price it has been the rule that the actual time should only be charged. I agree that a 10 cents per rivet charge would be right.

Mr. Hewitt: I believe it would be all right to charge the actual amount of labor where there is no price specified in the rule.

Mr. Fisher: I maintain that a truck spring is easier applied than a spring hanger. There is sometimes labor in getting them out when there isn't room enough to allow the head of the hanger to come through.

Mr. Sternberg: This is a matter of considerable importance. Charging actual time is all right, but there is so much variation in different roads making up actual time. I remember one time where a railroad company charged 22 hours for removing and replacing a body truss rod. The gentleman is right in saying that it is a little more work in getting out the hanger than in replacing the spring. In order to get the matter before this association, I move you that it is the sense of this association that two hours is the proper charge for removing and replacing a U-truck hanger.

Motion seconded.

Mr. Eubanks: I would like to amend it to three hours.

Mr. Trapnell: Wouldn't it be well to consider why the Master Car Builders' Association did not put a price on.

Mr. Sternberg: It was impossible for them to consider all of these things and it was their object to have a committee appointed on prices to take care of that part.

Mr. Curran: It appears to me that three hours would not anywhere near cover the charge of applying a spring hanger. It often occurs that we have to jack the car up and take the spring hanger out and take it to the blacksmith shop and have it repaired. It will require three hours for the blacksmith to do the work.

Mr. Livingston: If I had a case of a wooden truck sides and U-hangers, I certainly would make my charge according to the time. If a man objected to the bill, I ought to be in a position to tell him why it took me that long, and I do not think I would be turned down by any arbitration committee.

Mr. Bradley: If the hanger is bent it means blacksmith's labor. I changed a number of them in the last twenty years. I kept tab on them and they run as high as 11 in one day. Some I change in one hour and others in three, but I make an average price for two hours.

Mr. Swanson: Is it within the power of this association to recommend any specific price for any operation that will hold good. I would think this motion would be placed in such a way that it would be a recommendation to the Master Car Builders. We cannot place any specific price on any operation here and have it valid.

Mr. Trapnell: Any motion or any action that this association takes is only recommendatory. If this association would see fit to pass a resolution that this is a proper charge, of course there is nothing obligatory about it, and if this motion prevails it will be the sense of this meeting that such is the proper charge. It is a question of what the arbitration committee would say, but I think the opinion of men accustomed to doing the work, when there is no price specified, would bear a good deal of weight with any committee appointed to decide the matter.

The question was put upon the motion and lost; the vote standing 27 for, and 35 against.

Voice: Let us have the views as to how long it takes.

Answer: It varies from 2 to 10 hours.

Mr. Elliott: I move that it is the sense of this association that the actual time consumed be charged for such repairs not specified in this article.

The motion was seconded and carried.

Rule 108.

Mr. Eubanks: Is it proper to make a labor charge for rehanging side and end doors?

Mr. Trapnell: It appears to me that that rule is very plain. It says no charge shall be made except on the authority of a defect card.

Mr. Barker: We are accepting bills for rehanging our doors at 30 minutes, which I believe is the spirit of the rules; but when we receive a bill for applying new doors we do not allow that charge; that is included in the price for the door.

Mr. Stoll—Rule 107 permits you to bill for the rehanging of a side door, and one-half hour for an end door. When you get a defect card for a new door in interchange and bill for labor you bill for the new door, plus the labor.

Rule 114.

Mr. Hodgson—I think somebody should discuss that because some would use fir instead of pine.

Mr. Barker—We are allowed that under the rule.

Mr. Trapnell—I will ask Mr. Livingston if he destroyed a Southern Pacific car on his road and elected to reimburse—what his understanding of the rule is?

Mr. Livingston—If we destroyed a S. P. car on our line we would take it up with the owners and get authority, find out the condition of the car, and if we were to rebuild it we would make them an offer to replace the car and rebuild it with the same material that was originally in the car.

Mr. Hodgson—Suppose the car is destroyed by fire and he should ask the owners for a blue print. If they furnished it with no specifications, how does he know the kind of siding that was on the car? Would it be permissible for him to use fir or pine if the car had been originally equipped with something else?

Mr. Stoll—He could use what was on hand provided it was equally as good—any kind of pine, fir or cedar.

Mr. Hodgson—Rule 114 says the original kind must be used.

Mr. Stoll—The other rule says fir or pine can be used.

Mr. Swanson—My contention is, if I was unable to get a specification of that car, and I lived up to the M. C. B. recommended practice and other specifications on lumber, that the arbitration decision would be in my favor. I would have to use the specified siding as called for by M. C. B. in their recommended practice.

Mr. Hodgson—I asked for a discussion for my own personal information. We got into trouble and I offered to take it to the arbitration committee, but the road that the work was done for did not see fit to do so. They said they could settle their own claims.

Mr. Barker—It is said that this latter part of rule 115 is entirely in the interest of the private car owner and the owner of cars of small capacity, and as an encouragement to continue those in service, because they have made an exception in this case.

Mr. Swanson—I take it that the trucks would be valued at the depreciated value of the trucks at that time just as they are now; that they would be settled for at the depreciated value.

Mr. Smith: If I destroy another company's car with trucks of 50,000 capacity, I can choose as to whether I return those trucks or destroy them and allow the depreciated value.

Mr. Barker—Then we will throw away the idea that we shall pay the scrap value. Roads that destroy your trucks, or destroy your car bodies and have your trucks, will pay you the scrap value. They won't take the depreciated value unless the depreciated value is less than the scrap value. I do not know whether I get it clear as to who shall have the choice as to the second-hand value or the scrap.

Mr. Trapnell: As I understand Mr. Swanson and Mr. Smith, the person destroying the truck would have the privilege of rebuilding that truck or paying the owner for it at the depreciated value. That don't bring any scrap price in.

Mr. Barker—This is a case where the truck is not destroyed. It is serviceable, in good shape, and in place of the owner having the privilege of receiving his truck back, or having it returned by the party destroying the car, or buy it at the depreciated value, it says here that we may pay for it at scrap or second-hand value.

Mr. Smith—As I understand this rule, there is no provision made for the 50,000 capacity, or less, truck, except to private individuals. This is referring to heavy capacity trucks.

Mr. Kipp—It would be my opinion that it would be at the option of the company destroying or damaging the car whether he paid scrap value or second-hand value. If scrap value is less than second-hand value, according to the depreciation and age of the car, he certainly would not pay anything but scrap value.

Mr. Curran—The way I understand this rule is that the truck can be settled for at scrap value to the car owner, with the exception of the private owner, and the wheels can be settled for at either the second-hand value or scrap value; that part of it is in brackets. Where it refers to the second-hand value it refers to the wheels only.

Mr. Wymer—I favor the interpretation made by Mr. Kipp. The question raised is a good one to think about, but I believe it is up to the man who has the truck in his possession whether he should allow second-hand value for any part of that truck except the wheels.

Mr. Eubanks—I move you that the explanation made by Mr. Kipp be accepted as the interpretation of this rule.

Seconded and carried.

Rule 116.

Mr. Smith—In the fourth paragraph on page 71: "When cars of 60,000 pounds capacity or over, and so stenciled, have trucks with journals 4 inches or over in diameter when new, $40 per car shall be added to the figure as given above for the value of car bodies, when equipped with metal body bolsters." I understand that that $40 is to be added to the price of the car when new, and not $40 when destroying the car. Suppose a car is equipped with a metal bolster and it is destroyed, we do not allow $40 on the value of the car when it was destroyed, but we add the $40 to the cost of the car when new, and deduct the depreciated value from $40. Am I right?

Mr. Head—I perhaps handle as many cars as anybody else and that $40 is added to the new value of the car. Take, for instance, a box car; the body is $385; to that we add 10 per cent and to that we add $40 for the metal body bolster, which makes it $463.50; then from that we depreciate with the age of the car.

Mr. Barker—We have a recent decision on that, which says it shall be added as at the time the car was built, and depreciate from that time.

Mr. Head—Last year we thought 10 per cent should be added to cars except coal cars.

Mr. Hodgson—In the third paragraph it says, "When the capacity of any car other than a gondola is 60,000 pounds or over, 10 per cent should be added."

Mr. Head—The question sometimes comes up as to what per annum means. We have always thought that it meant the annual depreciation. You would not have 30 per cent depreciation. A few years ago we had the difference between a coach and a passenger and freight car, and there was an annual depreciation of 6 per cent, and the passenger car was 3 per cent per annum, and they have changed the passenger part to correspond with the freight.

Mr. Barker—The way the D. & H. operates under that, we make a per annum per cent on the depreciated value of the car each year. They were accepted and we found that other roads expected that from us, and we pay the bills on that. We reduce the value of the car from its first value the first year, and then we reduce it each year on its depreciated value until it reaches 60 per cent.

Mr. Trapnell—The amount of interest would be more than the depreciation of the car.

Mr. Head—The per annum—you multiply your rate by the number of years.

Mr. Barker—On the tank cars there are three depreciations—4 per cent on the tank itself and 5 per cent in the other case, and you have the depreciation on the frame of the car and then on the trucks. So there will be three items to figure on a tank car.

Mr. Head—There are two depreciations on every car we make settlement on. We make it 6 per cent on the body and 5 per cent on the truck.

Rule 118.

Mr. Head—A stock car not properly fitted with stalls—every road that has made settlement has settled at their price as a private car. Unless fitted with stalls you can only charge a railroad price. There are very few that are fitted for permanent stalls. The question arises as to whether they should charge the railroad price or put it in at the original cost of the car.

Mr. Barker—The question there, is, what is a stock car? There are cars for carrying racing horses and for prize stock that are built on the lines of passenger equipment; they are lined with leather and have partitions lined with leather. They are valuable cars and we should look into this and see whether they shall be considered stock cars or as belonging to the passenger equipment.

Rule 119.

Mr. Livingston—If we have a car that has been destroyed that comes in under the other rule and we elect to return the trucks in this case, it being an inside hung brake, would you return the brake beams with the truck? If the brake beams are hung to the body, would you then return the brake beams to the owner with the trucks?

Mr. Trapnell—In either case, that is my understanding.

Mr. Livingston—If you return the brake beams, does it carry with it the rods and all of the levers and key bolts?

Mr. Swanson—Our practice has always been to send back all of the equipment, stopping at the connection of the top rod with the lever.

Mr. Livingston—Do I understand that you stop at the top of the lever as it starts toward the brake cylinder?

Mr. Swanson—That is one connection.

Mr. Pendleton—I would like to ask Mr. Livingston if he is not talking about a destroyed car.

Mr. Livingston—Yes, and returning the trucks.

Mr. Pendleton—That should be handled under Rule 118. Rule 119 is concerning seriously damaged, and not destroyed.

Mr. Wymer—It seems to me that this question is settled under Rule 116. It says: "Price, including brake beams complete, truck levers, dead lever guides and bottom connecting rods."

Mr. Barker—If Mr. Livingston returns the trucks and does not return the brake attachments, we shoud ask him for a defect card and he will give it. That includes the entire foundation brake gear under the trucks.

Mr. Livingston—Does that carry with it your dead lever guides, the truck levers and the entire connection rod?

Answer—No.

Voice—I understand we would start at the floating lever and include anything that is not connected directly to the body of the car.

Rule 120.

Mr. Lynch—That is a very important rule in my opinion. This association has made several recommendations at different times in regard to its change. It is just as necessary now as it was before, and with your permission I will read a copy of a home route card to show you the necessity of the change. This is the case of a car becoming unserviceable on the Big Four at Cleveland and the Big Four made request for a home route card, which was furnished by the owner.

V. of A. 1513. From Big Four to W. of A., via Big Four—N. Y. C. & St. L.—B. & L. E.—B. R. & P.—N. Y. C. & H. R.—P. & R.—C. R. R. of N. J.—Penna. Co.—Erie—G. T.—D. & T. S. L.—T. T. R.—C. H. & D.—L. & N.—T. C., and Southern, to be shopped for sides, ends, roof, and floor decayed. (Records of 1909 and 1910.) Car delivered by the Big Four to the N. Y. C. & St. L. July 29, '11.

My object in bringing this before the association is that it may be taken up with the proper officials so as to cut out the 10 or 12 lines of circuitous routing, and I would move that while the owners elect to furnish home route cards, that they be over such lines as will take the car home over the shortest and most direct route. It seems to me that something might be done in regard to preventing cars from running all over the country in bad order condition.

Motion seconded.

Mr. Trapnell—I would ask Mr. Hodgson to make an explanation due this association for the Master Car Builders, which I think he understands.

Mr. Hodgson: The Master Car Builders' Association appointed a committee to confer with the A. R. A. to go into this question, and it will be only a short time when I think there will be a ruling on that. I think Mr. Lynch is proper in having these different lines eliminated, but I do not think we could do anything at this time on account of this other committee.

The question was put upon the motion and carried.

Mr. Hodgson: I do not think that motion should prevail in the face of the Master Car Builders' action.

Mr. Trapnell: I would recommend that Mr. Lynch's motion be changed so that we refer this specific case to the committee appointed by the Master Car Builders' Association as a case in point. It may have a tendency to get in line with the A. R. A. and show our position in the matter. If Mr. Lynch will change that part of the motion that we recommend to this committee.

Mr. Lynch: I have no objection to that being added. My idea was to send a copy of this home route card to your committee to impress them with the importance of getting them out the shortest route. And I would move its reconsideration.

The question was put upon the reconsideration of the motion and carried.

Mr. Trapnell: The question is before you in its original state.

Mr. O'Donnell: This association has worked on this point for three years to my knowledge. Eternal vigilance is the price of liberty. I think Mr. Lynch's motion will not do any harm and it only brings before the men the fact that the evil is still in existence. The amendment that I should offer, if agreeable to Mr. Lynch, is that this association has noted with much pleasure that a committee has been appointed to act upon this subject, and we respectfully submit the further evidence.

Mr. Lynch: I accept this as the original motion.

Seconded and carried.

Mr. Barker: In regard to the form of home route cards on page 87, there has been some difficulty experienced because the card does not have a date line, and there is no provision made for a date line. Wouldn't it be well if this association would recommend that the form be changed and a date line added?

Mr. Trapnell: Right under where the man signs his name, he puts on the date, but there is no specific line and it might be well to have a line for that purpose.

Mr. Barker: I make that as a motion.

Seconded and carried.

Rule 127.

Mr. O'Donnell: The balance of the rules are all executive, and I do not think we ought to burden Mr. Hodgson to read them.

Mr. Trapnell read Rule 15 relatively to our service.

President Boutet: I hardly think we all understand it from the discussion yesterday pertaining to the same thing when we came to A. R. A. rules. Some were pretty badly mixed up and I wish you would bring up your questions now.

Mr. Millburn: When a flat-bottom gondola is loaded with coal, the sides are bulged out beyond the limit of the receiving road, and they refuse to accept it and transfer it; who has to pay it?

Mr. Chapman: I believe the delivering line is responsible for the transfer of the lading in that case.

Mr. Pendleton: As I understand it under the rule, where there is no local agreement, it would be chargeable to the delivering line. Where it is due to defective equipment, I am to be the judge of cars going over my line.

Mr. Livingston: It is the same as a mechanical defect and the delivering company is entirely responsible.

Mr. Barker: It appears to me that that should be charged to the owner of the car. The car is defective if the sides bulge out so that it is not fit to carry the load. As far as the D. & H. is concerned, they are paying for it. Where we deliver a car to a connecting line and it is bulged out beyond their clearances, we have to give them a defect card so that they will bill us for drawing it in.

Mr. O'Donnell—I would like to ask if he will pay us in Buffalo. I think he means to convey the fact that he pays for it where the home lines are delivering the car, but it would not apply up in our country where the D. & H. is not a connecting line. We do that in Buffalo where the cars are weak and they are taking them home.

Mr. Hitch—I move you that it is the sense of this meeting that the delivering line is responsible.

Mr. O'Donnell—If Mr. Hitch wants that to go, I will sustain the motion.

Mr. Curran—If the bulged car was going home to the owner what would be the situation?

Mr. O'Donnell—They would transfer it without question at their own expense.

Mr. Curran—Wouldn't it be just as reasonable to ask the delivering company that a car loaded with grain would do all right if the owner of the car would have to stand for the transfer?

Mr. O'Donnell—It would be necessary in that case, according to my interpretation of the transportation arrangement, to penalize the people who did such a thing and make the delivering line responsible. It is not safe to say that the road delivering this car loaded it; they may have accepted it and it became weakened, but it is only just for the home line to receive it home without expense.

Mr. Pendleton—I cannot agree with Mr. O'Donnell. I do not see why I would not be just as much entitled to a transfer on my own car as I would on your car. You are going to force me to take the car and transfer it at my own expense. I do not believe it is right or intended under the rules. If you offer a loaded car in interchange with these defects, you are responsible for the transfer. I do not see why the delivering line should be forced to accept the car and stand the expense of transfer. Suppose that you received a car at one point with defects that entitle him to transfer under A. R. A. 15 against the delivering line and he did not take advantage of the rule in transfer, but he run the car on another connection, probably 100 miles, do you expect him to accept the car just because you allowed him to come up on his line?

Mr. O'Donnell—Yes.

President Boutet—This is put up as the case of a flat bottom coal car, loaded with coal, being received home by the owner from a connection; 95 per cent of the cases of this kind are cars that have been delivered by the owner to the road to take down to some mine to load with coal. It is almost impossible to detect the condition of all the empty cars, of weak stakes, causing the sides to bulge out, and I would consider it very unfair to ask the delivering line to stand the cost of transfer. A. R. A. rule was gotten up with the intention of changing the cost of transfer. It was the entering wedge into something that this association had asked for, to make the receiving line pay the cost of transfer under all cases. I cannot help but believe that Mr. O'Donnell is right when he states that if the owner's car is received with the sides bulged out on account of the stakes being weak, etc., that it is only right to ask the receiving line to pay the cost of transfer.

Mr. Pendleton—You understand the object of A. R. A. rule 15 was to permit the receiving line to pay the cost of transfer in the majority of cases and that this was a wedge leading up to that end?

President Boutet—Yes.

Mr. Pendleton—I do not understand how they happened to miss it. Under A. R. A. rule 15 as worded now we can transfer 75 per cent of the business today and bill the delivering line.

Mr. Pendleton—We transfer a great many cars at Kansas City and I assure you the delivering line is not penalized in more than 50 per cent of the cases. Our rules limit the cost of transfer. The cars must have certain defects before they are transferred. In many cases cars are offered to us that we do not consider safe to go, and if these conditions do not exist we have to transfer at our own expense. Under A. R. A. rule we can transfer 80 per cent of them and make you pay for them. The management would say that the first thing was to keep business moving, if the car was safe.

Mr. Trapnell—The chair desires to beg the pardon of Mr. Hitch. He made a motion a while ago, which was seconded, that it was the sense of this meeting that when a car is loaded with coal, or any other commodity, with sides bulged sufficiently beyond the clearance, that the delivering line bear the cost of transfer.

Mr. Trapnell—The best way to kill a rule is to enforce it, and A. R. A. rule states that a car not safe to run, according to M. C. B. specifications or rules, shall be transferred at the expense of the delivering line.

The motion will be the first order of business this afternoon.

Wednesday Afternoon Session.

President Boutet called the meeting to order promptly at 2 o'clock.

Mr. Kipp—If the gentleman would accept an amendment to the motion, why wouldn't it be well to include any coal car, not especially a flat bottom. We have lots of hopper bottom coal cars with the sides spread.

Mr. Hitch—I accept the amendment.

Mr. Waughop—Let us see how far the sides shall go.

President Boutet—Say it will not pass clearance, tunnel clearance or bridge clearance.

Mr. O'Donnell—I wanted to say a few words in regard to an owner refusing to accept his own cars home under such conditions without a transfer order and expense against the delivering line. Strictly speaking, I think Mr. Pendleton might be entirely proper, but I think A. R. A. rule 15 was brought into play more or less by the mechanical officers of the companies to expedite business, and as I understand the rule, it is going to help out wonderfully throughout the country. The point I brought out was, if a railway is forced to accept them home with owner's defects, isn't it just as fair to assume that they should accept their own equipment home with a defect that the owner is strictly responsible for when the transfer of the lading is found necessary? If Mr. Pendleton's ideas were carried out in our association, it would create the billing of many roads. We have in the neighborhood of three or four hundred cars of coal coming from different lines, going on what we term switching movement, a portion of it going up through the northern portion of Canada. The owners never ask for transfer expense. They simply accept the car with a couple of broken end sills without expense. The spirit of the times is that you must be fair. No car inspector is permitted to accept cars nowadays selfishly. They are supposed to work for the best interests of the railroads, and that should be the spirit that should prevail in our minds. We should look at the load and not the car.

Mr. Lucore—Unfortunately I was not here at the beginning of the discussion of this rule. As I understand it, this car in the case under discussion would not be transferred if it were going out in the open country where there were no tunnels to pass through. If that is the case the answer as to what road should pay cost of transfer would be contained in paragraph D of this rule, which puts the responsibility for the transfer upon the road which is unable to get the car to its destination.

President Boutet—That was about on the line of what I intended to say. The way we have interpreted Rule 15 down in our locality is that if a car is offered from one line to another loaded and the car is bulged out so that it will not pass clearances of the receiving line, or if the car is loaded with lumber so that it lays to one side on account of weak springs, or something of that kind, we pass a rule that the box car must be leaning a certain amount to one side so that it would not be safe to go in the open country. We were compelled to pass that rule on account of the clearances of some of the lines. The Pennsylvania's clearance on cars going east is 10 ft. 2. Some of the cars when new measure 10 ft. 2 in. And when a car is bulged 1 inch it would be too wide, and I think it would be unfair to say that it could not go forward. If a coal car is leaning, spread out 7 inches on one side, or a box car 8 inches, we would say that car is safe to go. I believe as outlined by Mr. Lucore, that was the intent of the makers of A. R. A. rule. If that is the intent, the understanding of this association is certainly radically wrong if the motion prevails.

Mr. Pendleton—I understand we are endeavoring to interpret the rules. It is not what we would like the rule to be or what we think the rule ought to be, but it is what the rule reads. We are trying to place an interpretation upon it according to the rule, as I understand it. If it is defective equipment, it is up to the judgment of the receiving line and the delivering line is responsible for that transfer. The rule does not make any mention of eight inches or ten hours' work to fix the load. We cannot take into consideration our local rules. This isn't going to interfere with the movement of business, but we will be governed by A. R. A. rule where we have no other agreement. Are we going to live up to A. R. A. rule and place an interpretation upon it here so that we will go home with the understanding that where we have nothing else the A. R. A. rule will govern, and we must place the interpretation upon the rule as it reads? As I read it, defective equipment means that you shall judge whether it is defective. Your inspector and mine will be the judges. If the sides are spread out and the side sill is decayed, it is defective equipment, and if we do not consider it safe for movement it is up to us to transfer and authorize bill from the delivering line.

President Boutet—If that car has defects for which the delivering line is responsible under M. C. B. rules, and cannot be repaired with the load in the car in reasonable time, then it is a defect for which that car should be transferred. I do not interpret A. R. A. rule to say that because a car has defects that it must be transferred.

Mr. Pendleton—It seems to me that the rule is perfectly plain.

President Boutet—Necessitating transfer?

Mr. Pendleton—No. As I understand that, it means that you and I are going to be the judges as to whether it is safe to run or not. It does not say whether it is car owner's defects. It is defective equipment. Who is going to be the judge and where are we going to draw the line? We want to move this business, but if we try to do it at Toledo and we are all broad gauge and run cars over to another connection which isn't broad gauge, the other fellow is going to transfer and penalize us for it.

President Boutet—According to that, if one road would deliver a car to another road with a flat wheel, we could transfer it and charge the delivering line for it.

Mr. Pendleton—Within the meaning of the rule they could. That is defective equipment.

President Boutet—I believe it is the duty of this association to take a broad view of that, as I believe it was the intent of the A. R. A. rule. If it is necessary to transfer these cars to make the repairs, then these rules should govern. I would like to have Mr. Lucore explain the object of A. R. A. rule, so that we may have no misinterpretation.

Mr. Lucore—The framers of this rule were very careful not to infringe upon the rights of the Master Car Builders, and they tried to work out a rule that would dovetail into the M. C. B. rules and cover the transportation features involved. In the case of Section A it was contemplated, I take it, that a car that had a flat wheel would not be transferred under the M. C. B. rules. By framing the rules as they did so that when the transfer is due to defective equipment that is not safe to run according to M. C. B. rules, it is left entirely in the hands of the mechanical people as to what cars should be run and what should not be run. Take the case in point: If the car were destined to a point out in the open country it is conceded that it would not be a defective car, but if it were destined to a point to be reached through a tunnel, an attempt is being made to show by paragraph A that it is a defective car. It seems to me very clear that in a case such as stated where the difficulty is with the clearance, disability of the receiving line, paragraph D would be the one to govern, especially in view of the fact that the foot note explains what the words "load limit" mean.

Mr. Shultz—It seems to me that paragraph D is intended to cover this particular case, and yet it looks like it would make the delivery line responsible for the transfer. I am sorry that

this discussion has got so far on A. R. A. rule 15, as I am afraid it will be misunderstood by a great many. I feel that the intention is that it applies where no other remedy is available than to transfer the car, and when that is necessary either receiving line or the delivering line is responsible, strictly in accordance with the rule as it reads. I believe it is entirely optional with the receiving road as to whether he is going to repair the car or not. Any mechanical defects for which he may see fit to transfer this car, I believe he can collect from the delivering line.

Mr. O'Donnell—Mr. Shultz brings out the point I was going to speak on. Mr. Lucore tells me that section D in his opinion would cover the width of the car, that is due to the weakness of the side. Mr. Lucore, of course, knows thoroughly the points about rule 15, but it seems to me, as Mr. Shultz has stated, that the receiving line reserves the right without question to call a car received in that condition defective equipment, because section D governs the physical condition of the car, that is as to weight or height as originally built. That is the way we interpret the rules in our association.

Mr. Barker—As I understand this rule and the motion, if a rule does that, the owner may deliver light cars to his connecting line that are not in proper condition to carry the load which it is designed to receive, and when the cars arrive back home with sides spread out, he may ask the delivering line for the expense of transfer. There is one word in this paragraph D that controls very largely, and that word is "disability," used in connection with the receiving line; if you will read it over very carefully you will find that it controls "When cars exceed load limits." It does not seem to be fair at all for a railroad to keep its equipment in such a condition that it would spread out so that it would not clear his own line, and then ask the delivering line to make them good on it.

Mr. Wymer—I do not believe that the motion as made is associated with paragraph D in any way. I believe that the matter in paragraph A applies in this particular case. There is no question in my mind but that there is a great deal of opportunity to take advantage, you might say unfair advantage, under the provisions of A. R. A. 15, if the receiving road is so inclined. The question has been raised as to whether or not the receiving line might transfer a car with flat wheels and charge it to the delivering line. I believe under this rule that could be accomplished, but it would not be reasonable. I do not believe that paragraph D has any connection whatever with a car that cannot be moved on account of clearances due to the car being defective.

Mr. Sternberg—Mr. Shultz and Mr. O'Donnell both voiced my sentiments in that respect. I do not believe that paragraph D is related very much to paragraph A. A is defective equipment, while D is for clearance dimensions, and as to accepting a car or transferring it for a pair of slid flat wheels, I think they have the wrong interpretation of that, because, according to M. C. B. rules, they would not transfer it unless the car was unsafe. If a coal car were spread out, it certainly would come under paragraph A.

Mr. Pendleton—I do not agree with Mr. Sternberg about a slid flat wheel. It is defective and M. C. B. rules govern. I would not think of transferring a car with slid flat wheels. I would fix the wheels.

Mr. Lucore—Perhaps I do not quite understand the point myself, and if that is true, there may be no difference of opinion after all. May I just ask the maker of the motion if it is a fact that the car we are talking about would be safe to run if the destination were reached without passing through a tunnel or other side obstruction?

Mr. Hitch—I had in mind at the time I made the motion that the car would not be safe to run anywhere.

Mr. Lucore—That is very different and I withdraw all I said. Certainly paragraph A governs.

Mr. Pendleton—I would not consider the transfer of the car under any condition, whether A. R. A. rule or not.

Mr. Sternberg—To do away with A. R. A. rule, could you transfer for a slid flat wheel under the M. C. B. rules?

Mr. Pendleton—The M. C. B. rules have never provided for transfers until last year, and then they brought in a transfer on improperly loaded cars. The only provision for transfer has been made by local agreements, and our local agreements have been made to limit the causes for transfer, to eliminate the great amount of transfers. Under A. R. A. rule there is absolutely no limit. That is the trouble with the rule. Some might say that A. R. A. rule did not mean anything. I believe they are half-way right about it, because it goes so far we do not know where the end is. If there were a limit to it we could work. I know how far I am going to go with it, but I do not know how far the other fellow is going. If he goes the limit, I am getting the worst of it and my superiors are going to get after me.

Mr. Stoll—Rule 2 on page 3 says that loaded cars offered in interchange must be accepted, except that receiving line may reject leaky tank cars and cars not loaded in accordance with the rules for loading materials.

President Boutet—I do not think there is a man in the room, as the rule has been explained by Mr. Hitch, but who would say that the delivering line should pay for the cost of transfer. It is hardly necessary to take a vote on the motion.

Mr. Kipp—As I understand it, if the owner of a car delivers a car to my line and I take it down a hundred miles and load it with coal, I bring it up and offer it loaded, and the car is spread out, and it goes safely over the railroad I represent and I get it to him, it is owner's defect and he says, "I am going to impose the cost of transfer on you."

Mr. O'Donnell—I move you that all discussion on A. R. A. rule 15 be eliminated fr m our proceedings. We are not in a position, and we know that none of these conditions as brought out by Mr. Pendleton will ever arise because the M. C. B. rule is put in there as prohibitive.

Motion seconded.

Mr. Lucore—I would dislike very much to see that motion prevail. It occurs to me that the discussion of this rule is just as admissible as the discussion of any other rule and I am sure the A. R. A. would be very glad to have it discussed. There is nothing sacred about A. R. A. car service rule 15. I agree that it can be improved. But we are trying at this time to get at what it means as it now reads; not to improve it. I hope we will go ahead and continue to dissect the rule.

Mr. Pendleton—I believe that this discussion should go in our minutes and our superiors will see it. They will understand why and it will bring out these points. Probably they will place us in a position where we can do the business just as they want it done, and we will keep it moving.

Mr. Lucore—As we all know, there used to be a lot of rejection of traffic going on at points of interchange. The receiving road would very naturally dislike to receive business and have to transfer at its own expense the cars that were in bad order. This rule was put in to help relieve the congested situation at the different terminals. It was put in in an attempt to be fair to all. It was thought that if a railroad delivered a car that under the M. C. B. rules was unfit to go forward, it was no more than right for the road so delivering it to pay for the cost of putting the goods in a car that was safe. It was hoped that would remove the feeling of reluctance that the receiving road had in the acceptance of freight. Then the other question came up. Should a road whose tunnels were small and tracks weak throw the burden of expense on to the delivering line? Paragraph D tries to settle that point. They have shown that when the vehicle itself would be safe to go forward, if destined to a point in the open country, then the receiving line should pay the expense; because the reason it could not go forward was really not because of the car's condition, but was because of the clearances, and it seems to me that that is a fair and equitable way to dispose of the matter. It is doubtless true that the rule can be improved, and when this association comes to the consideration of changes to recommend we can go into that phase of the matter very carefully, but I think all will agree that before recommending changes in any rule it is of the utmost importance to agree as to what the rule really means as it stands.

Mr. Dunn (Pa.)—I do not feel that the rule is intended to transfer a car with slight defects. It seems to me, however, that this association, with a view of arriving at some uniformity in regard to the interpretation of the rule, should agree on some method of handling defective cars under that rule. It is true, as Mr. Pendleton says, that a true and strict interpretation of the rule would admit of a car being transferred and charged to the delivering line. I do not think the makers of the rule contemplated that. I think we should agree that for any car having defects which can be repaired in 10 or 12 hours, such car must not be transferred. I think it would be proper for this association to agree so that all points represented here would enforce the rules in a uniform way. In regard to the car owner receiving his own car, the car owner is not responsible for the lading of that car. However, I feel that the framers of the rule intended that such a car, if delivered for switching movement, should be handled.

Mr. O'Donnell—Speaking on the motion, I take the liberty to say it was with no idea that we were fearful of what we were saying; it was simply this fact, that the rule has been carried out so satisfactorily at all the interchange points and the M. C. B. in their wisdom have seen fit to incorporate it without question, that it ill becomes us to try to pick flaws. We have our troubles and I realize fully the fact that the highest operating official, or whoever he may be, must look to us to expedite the movement of freight throughout the country. We are part and parcel of the system. But it was my idea that it did not look proper, after it had been incorporated by these officials, that we show that we did not understand it. I trust I have made my point clear.

Mr. Pendleton—You say that the rule has been so successfully carried out at all interchange points. Will you please tell me at how many points A. R. A. rule 15 is in effect?

Mr. O'Donnell—I can call to mind a large number of points where they have incorporated it in their local rules as a body. I do not know as it would be within my province—representing the other districts—to bring it up. I know we have.

President Boutet—As far as Cincinnati is concerned, I do not think anybody would have any objection to your mentioning Cincinnati.

Mr. Pendleton—They make exceptions to it, according to the president.

Mr. O'Donnell—That is only a local condition that we are paid to straighten out.

Mr. Pendleton—I do not know of a large terminal where A. R. A. rule is in effect.

Mr. O'Donnell—We handle in the neighborhood of 11,000 to 14,000 cars every 24 hours and we carry it out. I think there are several points east of Buffalo that have carried it out. There are 13 roads in our association that will stand by it.

President Boutet—In answer to Mr. Pendleton, he either misunderstood what I said or I said it wrong. I think we are carrying out A. R. A. rule 15 and I will tell the manner in which we are carrying it out. We will not transfer a car for defects that exist on a car if the repairs can be made in 10 working hours of one man. We will not transfer a car having the side bulged out if the car is perfectly safe to carry that load in the open country on a track that would not have close obstructions . I think we have been carrying out the intent of the rule and have not deviated from the rule.

Mr. Trapnell—Haven't you that authority unless otherwise provided? The "otherwise provided" in your constitution is 10 working hours of one man. In St. Louis it is 24 working hours of one

man. The same in Kansas City. We are working in accordance with A. R. A. rule, with that exception.

Mr. Hodgson—I will offer a motion, that it is the sense of this meeting that in receiving cars and delivering them under rule 15, A. R. A. section A, that if it requires longer than 10 working hours, that the car be transferred and the delivering company charged; but if the repairs can be made in 10 hours, they must be accepted and the repairs made.

President Boutet—Let us take a vote on Mr. O'Donnell's motion.

The ballot resulted in 42 in favor and 50 against, and the motion was declared lost.

The motion made by Mr. Hodgson was seconded by Mr. Dunn.

Mr. Swanson—You all know there are lots of commodities that are not transferable. Wouldn't it be well to extend the time for repairing a car of that kind? As you know, the traffic departments have a list of what they claim non-transferable freight. It seems to me it would be wise to extend the time on such cars.

Mr. Hodgson—That is optional with the receiving line. What I wanted to convey is that we have a reasonable time, and a time that will be taken by all railroads, but if you have a car that you cannot repair in 15 hours and if you wish to hold it over, there would be no question as far as I would be concerned, but the reasonable time would be 10 hours for not more than four men, to save per diem.

Mr. Sternberg—Does the 10 hours cover it for one man, or one hour for 10 men?

Mr. Hodgson—It covers 40 hours of labor.

Mr. Dunn—I would like to see that motion further amended to read 24 hours. I believe it would be better than to have an unlimited number of men working ten hours. I think it would be better to confine the recommendation to 24 working hours.

Mr. Hodgson—I will agree to that and I will make it read that it is the sense of this body in handling cars under A. R. A. rule 15, section A, that if the repairs can be made in 24 working hours by one man that it will be received, repaired and sent on to its destination; but if it takes longer than the 24 hours, that it can be transferred.

Mr. Pendleton—How are we going to arrive at the 24 hours—empty allowance or loaded? I believe we ought to say the empty allowance. If the car is loaded, and four end posts broken, it is 16, and the plate is 12; you cannot transfer it and it is transferable against the delivering line. It is up to us to repair the car; transfer it at our own expense, or run it. I would suggest that we say empty allowance.

President Boutet—We have cars loaded with bulk earthenware that were we to attempt to transfer the car it would cost the railroad company more than they would get from the freight. Consequently I think it behooves any man to use a little common sense and go a little bit beyond what he would term ordinary authority.

The question was put upon the motion and the motion was carried.

President Boutet—We have reached the conclusion of the M. C. B. rules. It is customary, if there is anything lacking, that we bring it up after we pass the rules, but I would ask that the association lay that aside for a few moments, as we have a couple of papers to be read, and after we get through with the papers we will proceed to any objections to any of the rules that any one wants to take up.

The following paper written by J. J. O'Brien was read by Mr. Farrin, owing to Mr. O'Brien's inability to be present:

In looking over the reports of your association from previous years, I note that the majority of these meetings were mostly consumed in going over in detail the Master Car Builders' rules so as to come to one general interpretation.

The question before you is, has this organization accomplished any particular results other than one general understanding of the Master Car Builders' rules? The recommendations your body has presented to the Master Car Builders' convention for the past several years, if my memory serves me correctly, have not borne good results, although the Master Car Builders' Association received and acted favorably upon many recommendations presented by other railway associations. From this it would appear that the Chief Interchange Car Inspectors' and Car Foremen's recommendations are somewhat deficient, consequently every precaution should be taken to prevent similar mistakes.

This organization, no doubt, comprises the most capable and brainiest men on car interchange and is so recognized by those who are in a position to know. Now, admitting the qualifications of this body, is there any feasable excuse why better results should not come of such a convention of car men? May I say that, in my opinion, not enough time and proper thought is given to the subject of car interchange? Every consideration possible should be given to this subject in order to better the movement of car equipment at the various gateways.

We must admit that owing to the heavy pressure brought to bear upon the Master Car Builders' convention by operating and mechanical representatives at their meeting in June of this year, may be attributed the changes made in the M. C. B. rules, effective September 1, 1911, which carry with them for the first time the compulsory acceptance of loaded equipment offered in interchange. Operating officials in recent years have well versed themselves on this subject and are continually looking forward to better the interchange conditions. They deserve considerable credit for what has been accomplished through their energy. The majority of operating officials favor joint car inspection at all large terminals. Can we say as much for the mechanical representative, and if not, why?

To better the movement of cars through the various terminals, we must exclude from the book of rules on interchange any and all obstacles that in any way interfere with continued movement of cars. During the period that foreign cars are in hands of handling company, such regulations should be made that will guarantee keeping up the general repairs and having them ready for movement at all times. No rules up to the present day have had any encouraging future for creating the necessary facilities and employing sufficient help to keep cars in proper repairs such foreign cars as on their line. The Master Car Builders have created fixed prices as near the actual cost as was possible to formulate, which has resulted in most every instance in a loss to the line making the repairs. Furthermore, it naturally results in a tendency for railroads of this country to shift the repairs of foreign equipment on to his next-door neighbor and it is continued so until the car is termed in railroad parlance a buzzard. Can we not, therefore, attribute a cause for the present defective condition of the equipment?

We must admit that the Master Car Builders have bettered the conditions each year on many of the rules, but there is as yet plenty of room for improvement. Would it not be well to recommend to further increase car owners' liability and also to remove all penalization on certain existing defects when offered in interchange and add thereto a premium to the railroad making repairs by adding a good per cent, thus making it worth while for the railroad to repair foreign equipment on their line. Just consider for one minute the wonderful improvement this would bring about in the construction of car equipment for the future, as well as keeping up the repairs to the cars that we now have to deal with. Is it not also a fact that the owning line would use every energy to see that its cars are put in first-class condition before tendering to connection, rather than pay a heavy premium for repairs to some one else? Only through some such arrangement can we expect conditions to meet the requirements, namely, by putting it strictly on a basis and allowing the man that does the work a profit. I am satisfied that under some such arrangement only could it be accomplished. However, before entering into this, the Master Car Builders would have to first create a standardization of parts on cars of various capacities, eliminating the necessity of railroads having to carry an extraordinary surplus of stock. We are all aware that, regardless of the vast amount of stock that we carry in order to meet the conditions as they come before us, that in many instances we are compelled to hold foreign cars upon our line for weeks awaiting some special casting or patentable parts. We must agree that is rather inconsistent and should not be tolerated by higher officials. No doubt this subject could be developed and excellent recommendations brought out in discussion. This organization of car men could appoint from their number various committees on these subjects, who after one year's research would be able to intelligently discuss the merits of their recommendations, and under no circumstances should any recommendations be accepted from committees unless they explain the reason why such recommendations are made. It places the matter more intelligently for all to understand and act, and it further fortifies the committee in its presentation so that when the organization makes a recommendation and it is presented before the Master Car Builders, it will carry with it justification of its acts.

I desire to further express my entire confidence in this organization of car men as being amply qualified to make any recommendations that they see would be beneficial to the railroad world on car interchange, provided your body extends its every energy, for your capabilities cannot be questioned, and consequently it behooves you all to create new ideas for the betterment of the future on car interchange.

President Boutet—I have asked Mr. Trapnell to reply to this.

Mr. Trapnell: I move you that the paper read by Mr. Farrin and written by Mr. O'Brien be received and recorded in the minutes of this association, and a vote of thanks extended from this association to Mr. O'Brien for his able paper.

Seconded and carried.

Mr. Trapnell: I believe the paper just read outlines the conditions which this association has to contend with. The matters as touched upon by Mr. O'Brien are very deep, and I concluded that in my humble way it would be better for me to place upon paper the answer to his paper, so with your permission I will read:

Mr. President and Members:

It affords me pleasure to reply to the very able paper prepared by Mr. J. J. O'Brien, which has just been read, in which he has outlined so clearly his honest convictions.

The first question that he touches on is: Has this organization accomplished any particular results, other than a more nearly uniform understanding of the Master Car Builders Rules?

It occurs to me that if only that one thing has been accomplished, it would have repaid us for whatever time and money has been spent in our meetings, for prior to the organization of our association the rules were interpreted to suit each inspector's individual desire, and it was seldom that two interchange points would interpret the same rule the same way; in fact, the same rule would frequently be interpreted differently by different roads at the same interchange points. With a more nearly uniform understanding all over the country of the M. C. B. rules of interchange which has been accomplished through this association, the interchange of cars without friction is possible, and harmony now prevails where discord in the past was common.

But our association has accomplished more than that. We have been the prime movers in the principal changes in the rules. We have recommended to the M. C. B. arbitration committee from year to year changes which we felt would improve conditions, and while they have not always seen their way clear to adopt them at once, many of them have at later conventions

been adopted by the arbitration committee and the M. C. B. association has approved them.

At the Chicago meeting of our Association the matter of splicing draft sills was advanced and Mr. Harvey of the C. B. & Q. became interested and went to his office, where he made a rough drawing of the ½-butt splice Fig. 9 B, and the same was recommended by this Association to the M. C. B. arbitration committee and today it is the standard splice for draft sills.

The rules, effective September 1, 1911, contain a change that we have advocated and have made the paramount issue for several sessions, having repeatedly recommended it to the arbitration committee for consideration and adoption. I refer to the rule under which all loaded cars offered in interchange must be accepted, with the exception of leaking tank cars, and cars having defects constituting a violation of the law. This change which the M. C. B. Association has made is a grand move in the interchange of cars, doing away with the back-haul of cars—something that has been indulged in to an alarming extent although it was doubtless never intended by the M. C. B. association that it would be.

The question is also asked by the writer of the paper, whether there is any good excuse why better results should not have been accomplished by a convention of car men such as ours. I have no doubt that we could have done better. But we have tried to do our part and who can look back without seeing where he could have done better? Associations are not unlike individuals in this respect.

Another clause in the paper suggests that it would be well for this association to recommend a further increase of car owner's responsibilities. This association has made such recommendations from time to time, and while the M. C. B. association has not gone as far in this respect as we have recommended, the new rules do increase owner's responsibility.

Another suggestion is made, namely, that this association of car men could appoint from their number committees on these various subjects, which committees after a year's research, would be able to discuss and recommend to this association, changes to be made in the rules of interchange. I agree fully with the writer in this respect. It seems to me that the idea is a capital one as the association would have then the meat of the nut before them as the result of committee work without having to spend the time of the association in picking out the shell.

I believe that since the organization of this association, we have endeavored to give our best thought to the matter of car interchange, and have suggested what seemed best under the conditions as we saw them, and if we have not always been able to have our superiors see the matter in the same light at the time it should not be held against our association, especially if our recommendations have been later adopted, which has been true in many instances.

And whether our recommendations are adopted or not, we will continue to recommend those things which from our experience appear to be for the advantage of the railroads, to expedite the movement of traffic through the various great gate-ways of our country, and in doing so keeping always in mind the matter of economy to the roads we represent.

The M. C. B. Association makes the rules of interchange, but the actual application of these rules is in large measure in the hands of such men as go to make up the membership of the Chief Interchange Car Inspectors and Car Foremen's Association, and we are trying to apply the rules not only in the letter, but in their full spirit.

Our association is subsidiary to the M. C. B. Association, the same as the Association of Transportation and Car Accounting Officers is subsidiary to the American Railway Association, and I feel very sure that our association would be only too glad to have the M. C. B. Association indicate to us the subjects they would like us to consider, the same as the American Railway Association refers questions to the Transportation Association for investigation and report. Doubtless this is what Mr. O'Brien has in mind, and let us hope that he, as a member of the M. C. B. Association will be able to bring about the plan in this particular, which he has suggested.

It was moved by Mr. Hitch that the association tender to Mr. Trapnell a vote of thanks for his able reply. Carried.

President Boutet: We have with us Mr. Kinney, Superintendent of Motive Power of the Hocking Valley, and we would like to hear from him at this time.

Address of Mr. Kinney.

Mr. President and Gentlemen:

Yesterday was the first time that I had had the pleasure of attending one of your association meetings. I have been interested, of course, in the proceedings of your past meetings, and I must say that the interest I observed among all present yesterand the interest that it inspired in myself, caused me to be with you today, of which I am very glad. It does not behoove me to make very extensive remarks, as you have other business of far more importance to you, but you are certainly the subject of congratulations for the bright lot of men that you have with you and the interest displayed by all. I want to say that I have remarked to my friends last evening and today several times that this is the association and the convention we need. The interest of all is apparent and they are not afraid to get up and express their opinions and ask questions that are of benefit to all.

This morning Mr. Downing brought up the subject of furthering the importance of the car men. That lies with you gentlemen. In the past the car men did not receive the consideration that they deserved. And I must make a confession. I was brought up in a locomotive shop, and when I was operating a machine, if a man brought a piece of work that was necessary on a box car I was offended; while a part that belonged to a locomotive had considerable reverence paid it. As I passed long through the different departments a different view came to my mind. And it is through associations of this kind and a broadening of the ideas that has got you before the general manager. There is no general manager who will raise any exception to a convention of this kind if he knows the true facts of how it is conducted; he will want every man that is possible to leave the service to be with you in these occasions.

There is another feature that I want to dwell upon and that is departmental organization. Transportation has made rapid strides in getting the movement of cars improved. The men in the car department are just as responsible for that as any one else and should be given the credit. Broadening your minds in this associations has brought about that condition, and you should forget that you belong to one department. Competition is too strong and you should not be afraid to give something to the yardmaster or some other department. Remember that it is your railroad, and you should all work together. I am glad to see that the roads of the West are getting away from departmental organization.

I am not going to say anything more. I am happy to be with you, and I want to say that the day when an inspector who might have some disagreement, could go out with a piece of chalk and tie up a terminal, has gone by, and to you gentlemen is largely due the credit of the result.

President Boutet: We wish to thank you for your remarks, and trust that we may have you, as well as some of the other officials, at some of our future meetings.

Mr. Sternberg read the following paper written by F. H. Stark:

I find that it will be impossible to take advantage of your kind invitation to attend your annual convention at Toledo on account of a meeting of the M. C. B. Coupler Committee at Philadelphia on the morning of the 23d.

It would be a source of great pleasure to be with you to renew old and make new acquaintances for I count among my best friends many of the car men with whom I have come in contact with during the years of railroad service.

Your association has accomplished much and there is still more to be accomplished. The presentation of papers at your annual meetings, the free discussion of same and your informal meeting together, are all sources of education and dissemination. There is no class of men better qualified to judge and pass on the subject of safe conditions than the members of your association who come in close daily touch with actual service. It is through your association that a more uniform interpretation of the rules is possible. I am frank to admit that it is not an easy proposition to establish absolutely the same practice in all sections, for what is safe on one road or territory, is not always safe under other conditions, hence to avoid dangers on one hand or unnecessary expense on the other, good judgment must be exercised on the part of the men in charge with the end in view of expediting the movement of freight consistent with safety with due regard to the interests of all. The transportation officials are more and more assuming jurisdiction over the interchange of cars and the question of dispatch appears to be the prime object. This has led the M. C. B. Association to increase the car owner's responsibility and has encouraged the careless handling of cars, resulting in a marked increase in cost of maintenance of equipment. It is a well known fact that the unfair usage of cars is determined largely by the owner's responsibility and it is impossible to measure the loss on this account. We can venture to predict that the railroads will some day awake to the fact that freight cars must be treated with more consideration.

For years the integrity of the car department was never assailed and it was only after the introduction of owner's responsibility on a much larger scale that the evil thought "sharp practice" was even suspected. There are no large interests, corporate or otherwise, that are based solely on a code of honor as is the case with the interchange and repairs of cars. We as car foremen should use our influence and discipline severely any subordinates that are inclined to violate the spirit of the rules.

It behooves every man to treat the subject conscientiously and hold sacred our good reputation.

I am glad to note, Mr. President, that you advocate a more general supervision not only pertaining to the interchange of cars but the proper repairs, billing, etc. I believe that I was the first man to advocate employment of district joint inspectors under the supervision of a commission, preferably practical car men recommended by the M. C. B. Association and approved by the American Railway Association. I believe such district inspectors should have jurisdiction over all the terminal chief joint inspectors and that the latter shall have charge of all the local joint inspectors within a certain radius of their headquarters. The district and chief joint inspectors to have authority over the interchange of cars, also the character of repairs to foreign cars and the practice of billing against other roads. The district and terminal chief joint inspectors should be members of the M. C. B. Association and actively identified with the Car Foremen's Association and enjoy the privilege of making recommendations to the M. C. B. Association.

The traffic of this country would not permit of our resuming the old protection system of interchange and every reasonable means must be put in practice to permit the prompt movement of freight at the least cost consistent with good practice. If the mechanical representatives do not measure up to the exigencies of the situation the responsibility will be assumed by the transportation department at a great loss to the railroad com-

panies and the car foremen will be subordinated and subject to the orders of the train and yard masters.

I trust that the members in attendance with their ladies and friends will enjoy the stay in Toledo and return to their duties with new vigor, looking forward to your next annual convention.

It was moved by Mr. Shultz that the paper be received and spread upon our minutes and that a vote of thanks be extended Mr. Stark. Seconded and carried.

Mr. O'Donnell: I do not think the paper calls for very much discussion. I think it is an excellent paper. From my personal acquaintance with the writer, I know that he gave it a great deal of thought before presenting it to this association, as he is a thorough mechanical man and has had such a vast experience, it would ill-become me to try to pick flaws with it.

The paper is an excellent document for the benefit of this association, and I think we should send Mr. Stark our warmest thanks for the excellent subject that he brings out. He is heartily in accord with our work, and that in itself is something we should feel proud of.

President Boutet: Yesterday we appointed a committee to enumerate defects that should be considered slight; we will now hear their report.

Mr. President:

We, your committee appointed to enumerate defects that should be considered slight damage under the interpretation of Rule 3, beg to submit the following and recommend that no claims be made for cards at interchange points for the defects enumerated.

Body of Car.

Edge of roof; end facia; side facia; end and side mouldings; end and side door caps; end and side sheathing; side and end door of box cars; side post and side braces; door and corner post of stock cars; side and end stakes; side and end planks; end of flooring of coal and flat cars; all sills, draft timbers, cross ties, dead wood; sub-sills; body bolster, if not damaged sufficient to impair the strength of these parts.

Steel Cars.

All sills; body transoms; cross tie timbers; side stakes; end stakes; side or end sheets; top and bottom angle irons not damaged sufficiently to impair the strength or necessitate removal.

Any slight damage to trucks that does not impair the strength of parts damaged, or require immediate repair.

Signed by the Committee.

Mr. Barker: I move you that the report of the committee be received, the recommendations as presented be adopted as the sense of this meeting; the committee tendered a vote of thanks and discharged.

Motion seconded.

Mr. Waughop: I am agreeable to the report, except that the committee has included wooden door caps, not metal, and I recommend that that be put in the report.

President Boutet: The M. C. B. decided that missing wooden door caps is owner's defect. The committee has decided that this be included in defects we would not card against delivering line.

Mr. Pifer: In the remarks about steel cars, he says that when damaged as he described, it is not sufficient to renew it. He did not say anything about repairing it. It may not need renewal but should be repaired.

President Boutet: Wouldn't the committee be willing to add "repairs?"

Mr. Charles Stark: I was going to state that the committee had that under consideration. A kinked or bent end sill does not necessitate removal, but the owner may consider that it necessitates for the appearance of the car, some repairs; but we considered that it should not be carded at interchange. But when you get an end sill that has been stove in to such an extent that you could not do anything but renew it, it should be carded. If you say "repairs" we will get right back into it; they will card for any little damage to a steel car. They might consider a side stake was put there for strength, and you side-swipe a car and bend it, and the car is sufficiently strong to carry that load, and does not necessitate repairs, still the owner would want it repaired for the sake of appearance.

Mr. Wymer: It is necessary to repair iron end sills in order to provide for safety appliance defects, and I think we could not ignore that altogether.

President Boutet: It appears to me that their recommendation carries that with it.

Mr. Barker: If the safety appliances need any renewal or repairs it has to be done before the car is delivered; and if necessary to repair an end sill, that would have to be done, if it carried with it the repairing of the safety appliances.

President Boutet: Often times an end sill is damaged so that it would not interfere with the safety appliances, but it might require one bolt or other work to make the car serviceable. However, any of us acknowledge we should repair that and I think the report of the committee covers it very ably. Under the report as accepted, renewal or repairs are required.

Mr. Shultz: A party brought up the question of whether or not it would be a good thing to itemize in here slight damage by fire on coal cars. It specified damage. It is my understanding that slight fire damage on the inside of coal cars, which does not impair the strength or efficiency of the car would be included.

The question was put upon the motion and unanimously carried.

President Boutet: We have come to this meeting and have adopted what we think is the proper interpretation of the rules. We are not all in a position to go home and say that we will carry them out, but we are in a position to put it up to our superiors and tell them what this association has done, and ask their consent to carry out the rules as outlined by this association. I think if we will all be sincere in doing that we will accomplish more good than could be accomplished in any other way. Let us at least endeavor to get our officials to sanction the carrying out of the rules as interpreted here, and if we do that we will extend more good to the railroads than anything else we can do.

We have finished the rules of freight interchange, and we will give any one an opportunity of bringing up anything that we have passed over.

Mr. Lucore: Will the members please turn to page 88, paragraph D, of A. R. A. car service Rule 15. I notice in printing this rule the star that ought to appear opposite the word "Cars" and the words "load limit" has been omitted. Will the members please put the star in opposite the words, so we will understand what the foot note refers to.

Mr. Hitch: I want to refer to Rule 70; cars equipped with forged steel wheels. The case I wanted to put before the association is this: Road A delivers one of their own cars to B; the car was originally equipped with steel wheels. On receipt by B they found one pair of cast iron wheels; he took exceptions to them on account of their being slid flat and procures an M. C. B. defect card against A for one pair of slid flat cast wheels. On the authority of the M. C. B. card, has B a right to bill should he replace that part of cast wheels with a pair of cast wheels?

Mr. Barker: An M. C. B. defect card is an order of the treasurer issuing it every time.

President Boutet: That does not appear to be the question. There is no question as to the responsibility of the cars, but A delivers to B one of A's cars with a pair of cast wheels in place of steel tire wheels, and it is slid flat 2½ inches or more. He has a card for the slid flat wheel; is he permitted to put a pair of cast wheels in place of the cast wheels that he removed; would not he be perpetuating wrong repairs?

Mr. Livingston: He certainly would not be perpetuating wrong repairs.

Mr. Bailey: I do not see how he could do it without assuming responsibility of the difference in the price of wheels, which would be $22. I believe that the car should be transferred.

Mr. Pifer: I do not look at it in that way. I feel that this car had a pair of cast iron wheels in place of steel wheels and they were carded, that B would have a perfect right to take those wheels out and bill upon a defect card covering a pair of slid flat wheels, and he would put on a pair of cast steel wheels.

Mr. Hitch: A is the owner and he knows that he is delivering the car to B with a pair of cast wheels which is wrong; hasn't B the right to bill on that car?

Mr. Wymer: I believe if B only demands a defect card for the flat wheels, he is not going far enough at the time of interchange. I think he should require a defect card for the cast wheel in addition to the defect; then I think he is correct and he should make proper repairs and bill A.

Mr. O'Donnell: I would like to ask if Mr. Hitch understood that those were cardable defects in interchange when he raised the question?

President Boutet: I can answer for Mr. Hitch that he understood that. He was bringing this case up for discussion He would protect himself too; he would get two cards, one for a pair of wrong wheels and would get a card for a pair of slid flat wheels. It was a question that we thought a good one to bring up and it was stated that way for the purpose of getting up a discussion. How would he be protected if he put in a pair of cast wheels?

Voice: He should put in wheels of his own.

President Boutet: The question came up in this way. A number of roads have a lot of new steel tired wheels but a majority of the roads haven't steel wheels and it was to cover this. Would he be permitted to perpetuate wrong repairs and bill on it?

Mr. Livingston: If that car were offered to me in interchange, the inspector would demand a card for the wrong pair of wheels, cast in place of steel; then get a card for the slid flat and then you could bill on the two cards.

President Boutet: That was the point that I had in mind all the time. It is possible if he is so equipped that he would get two cards. If the inspector at the interchange point knew he had no steel wheels, he would get two cards covering them; one for wrong wheel and one for slid flat, putting the card for the wrong wheels on the car and he would bill for a slid flat. But if he were equipped with steel wheels and demanded a card for a pair of wrong wheels and a pair of slid flat, it is possible for him to bill on two cards.

Mr. Smith (Erie): If he did apply the steel wheels, how would he bill for labor?

Mr. J. L. Stark: In discussing a certain feature of Rule 115, page 69, second paragraph, referring to settlement for trucks. I would like for my own information to have that feature explained "with the exception of the wheels."

President Boutet: That was passed on by the association this morning by the statement that a person destroying a car would have the privilege of paying for the trucks at scrap price, except the wheels, which would have to follow under the wheel rule.

Mr. Pifer: In the last section of Rule 121 in regard to a damaged car being sent home if the owner so elects; does that interfere with the rule where owners must receive their own cars?

President Boutet: I do not think so. I think they would have to receive it.

Mr. Smith: In going back to Rule 48, we will suppose that a box car or even a coal car is damaged by fire on the inside. Does

that mean being damaged in fair service? Under this rule, would it be a delivering company's defect, inasmuch as the damage was due to unfair usage?

Mr. Livingston: We have an arbitration committee on metal roofing and if the car was in O. K. condition otherwise, it was considered owner's defect. You would have to call it owner's defects if it is on the inside, unless it would be shown on the outside between the planks and the side.

Mr. Smith: Why do we have this clause, when damaged in fair service?

Mr. Pendleton: In answer to Mr. Smith, when damaged in fair service—you lose a door, it is fair service and owner's responsibility; we are penalized for not making repairs to it, by offering it to the other fellow.

Mr. Pendleton: I thought we were going to make it side doors at all times. It is not considered unfair service to lose a side door; but you will be penalized if you offer it to some other fellow without making the repairs. We have a decision where the interior was damaged and it was not visible on the outside, and the inspectors failed to detect it. It was a concealed part, and you could not hold him.

Mr. Smith: In view of that decision of the arbitration committee, I cannot see any necessity of incorporating the clause "when missing or damaged in fair service" in here. Fire damage is certainly unfair service.

Mr. Livingston: Isn't it possible that a railroad may have a car burned on the inside while handling the car in fair service? A car might be burned to considerable extent, at the same time no visible damage to the car on the outside, that it had been roughly handled.

Mr. O'Donnell: Suppose you have a new car recently put into service and some person takes the liberty of loading it with refuse, and you soak the floor, and the odor is such that it is not fit for any lading, who is responsible?

Mr. O'Donnell: We have a number of complaints in our district. Some person loaded an excellent new 80,000 box car with old refuse. The owners got the car home and had to pay out $100 on the car. All they did with the case was to report it to the superintendent. I told the receiving line that I had no authority to give them any protection on defect card. If you would see a man loading a car under those conditions, you would say "Stop a minute." You would know it would not be right because the odor stays with the car.

Speaking on Mr. Smith's question, we have a number of those cases; all we give the receiving line is a trace; if there is no evidence through the sheathing so that the inspector can see it, we give no card.

Mr. Barker: We have the same thing about foul odors and it is up to our operating department; if they take a nice new car and have it loaded with bloody hides and such things as that it is up to the operating department. We also have cars damaged by fire in fair service. We operate on a line that furnishes us cars for charcoal, and there are times when the coal is loaded with fire in it and it is hardly discoverable; the motion of the train starts the fire again. We never have had any particular trouble about that. The owner has generally received his car back unless his damage has been so serious that he would discover it from the outside. Mr. Kipp's road delivered some cars with the charcoal on fire, and if it catches fire and burns up in our possession, he will have to pay for it. If it does not damage the car on the outside, unless it is not very serious, Mr. Kipp's road does not ask us to give a defect card.

Mr. Smith: I am quite agreeable that these parts are owner's defects, basing my opinion on the decision of the arbitration committee, but what I would like to get is the opinion of the association.

President Boutet: I think you will have to agree, from what discussion we have had, that if it inside or concealed parts, that it would be considered concealed or owner's defect.

The report of the executive committee was read as follows:

We, your executive committee, have examined the accounts of the secretary and find as follows:

Expenditures and receipts are correct.

We commend to the association the good and faithful work of our overworked secretary and recommend that the secretary be paid as salary for this term the sum of $100, closing August 2, 1911.

Charles Waughop, Chairman.

It was moved by Mr. Pifer that the report be received and placed on file.

Mr. Shultz: The members should understand that the committee has recommended that we pay the secretary for his services for the past year $100; that, as I understand it, is $50 more than he got the previous year. As far as I am concerned, I want you to understand that we have felt that the service he performed last year at least worth that much money, and I know a great many of us would not do it for that amount.

President Boutet: I will venture to say that there isn't a man in this room that would do it for $500.

Mr. O'Donnell: I think the amount is altogether too small a fee. Those of us who have followed Mr. Skidmore for the last two days can readily see the vexatious amount of work.

Mr. Waughop: The chairman is willing to give more, but we have not got it.

The motion was amended to read that the recommendation contained in the report be adopted, and unimously carried.

Mr. Lynch: I have been requested to refer to Rule 115, second paragraph. The gentleman wants to know what can be considered the second-hand value of a truck.

Mr. Waughop: Anything that has been run twenty minutes.

Mr. Lynch: What is the second-hand value?

Mr. Hodgson: The second-hand value will no doubt be determined by the owners of the truck.

Mr. Wymer: I do not believe that was the vote of the association on the proposition this morning. I think we voted that it would be determined by the man who destroyed the car.

Mr. Hodgson: That was the scrap value.

President Boutet: It appears to me that Rule 115 was discussed and disposed of by the association. We have left a good deal of leeway. We have the passenger rules in the morning, and regardless of what may come up at that time, it is my intention to close this meeting at 11 o'clock, except the election of officers, and we will close at that time so that we may participate in the ride around the Terminal.

Mr. Hodgson read the Passenger rules.

Rule 3.

Mr. Smith: I have in mind some trouble we have been experiencing recently with missing tools for passenger equipment. It is delivered loaded and returned empty with the tools missing from the tool case. Who is responsible?

President Boutet: I will answer that from the way we treat it at Cincinnati. If a baggage car, or any other car, is delivered and we are unable to look inside on account of it being locked, and if it comes back with the outside appearance all right, the original delivering line will accept it.

Mr. Smith: If it comes back empty and the tools missing?

President Boutet: Yes, the line that originally delivered it would be responsible.

Mr. Kipp: That matter was so decided at Atlantic City.

Mr. Reed: I have been handling passenger cars that way for a number of years. The railroads have no protection, for there are a lot of tools that are locked up inside the cars and in boxes, and if we cannot get in to make an inspection, we think they are inside and concealed parts, and that the owner should be responsible for them when we cannot get into them.

Mr. Barker: On the Adriondack Mountains is situated a prison and the unfortunates are shipped there from other parts of the state. These men are at times very violent, so they put shackles on them, fasten the shackles to a long chain between two men, and fasten it under the seats. The chain is then locked to the last seat and sometimes the prisoners become violent and swing backward and forwards until they tear all the seats loose before arriving at their destination. They will stand up together and rip the seats through the floor. When receiving these cars a guard stands at each door with a loaded revolver and rifle, and he will refuse you entrance to the car to make an examination. Who is responsible?

President Boutet: That is a painful subject to bring up.

Mr. Hitch: If the company saw fit to furnish the car for that purpose, the company furnishing the car would be responsible.

Mr. Barker: The railroad company is obliged to serve the state.

Mr. O'Donnell: I think the state of New York should be responsible to the D. & H. without question.

Mr. Barker: It is Smith of the Erie that is interested. They furnish us the cars. They sometimes furnish us a car load of maniacs.

Mr. Smith: I would like to have others express their opinion in regard to missing tools.

President Boutet: In the absence of some one getting up and talking we will hold that the delivering line would be responsible.

Mr. Smith: I would move you to that effect.

President Boutet: It would not be necessary when there is no objection.

Mr. Smith: I think I would be safer in my opinion. I move that it is the sense of this meeting that if A delivers B a baggage or express car loaded and locked, so that inspection cannot be made, when it is returned, even if empty, and the tools missing from the case inside of the car, the company delivering the car originally loaded is responsible.

Motion seconded.

President Boutet: I would consider that would carry the inside portion of a baggage car.

Mr. Smith: I will amend it to mean that.

Mr. Berg: Suppose you receive it locked and sealed. The inspection shows that the tools are in the car and you deliver it back with the tools missing; are you going to hold the company that delivered the car?

President Boutet: If the Lake Shore would receive a baggage car from the Nickel Plate and they took it over a portion of their line and delivered it to the Ann Arbor with the tools intact. If they discovered that somebody had taken the tools out, would you acknowledge that they were in the car?

Mr. Berg: We trace the car to the point of unloading. If the tools were in the car after it was unloaded, then we trace the first road that shows the tools missing and that is the one that is made responsible.

Mr. Sternberg: A great many baggage cars are exchanged where the doors are unlocked and still they are unable to get inside, because the baggage, possibly of a theatrical troupe, is piled up.

President Boutet: I would suggest that your motion incorporate "Or in such position that the inspector is unable to see the contents of the car."

The question was put upon the motion and carried.

Rule 4.

Mr. Smith: Do we under this rule construe a broken pane of glass a passenger car defect due to unfair usage or fair?

President Boutet: We have always treated it as a delivering line defect; broken window glass or door glass. That is line expense. If the car were delivered in interchange, then it would be a cardable defect.

Mr. Pendleton: The rules do not say anything about inside or concealed parts in passenger equipment; it says owner's defects, delivering line defects and line expense. I agree with Mr. Hitch that the glass is pro ratable expense, on a regularly assigned car. On a car that was not regularly assignable, a broken glass would be delivering company responsibility.

President Boutet: He has been answered that it is delivering line defect, inside or outside glass, except on a line car when it would be pro ratable as line expense.

Rule 6.

Mr. Hitch: How does it hold on a private car owned by show people?

President Boutet: You can hold the show people up for all you can get out of them; you are not going to get any too much.

Mr. O'Donnell: What is a trip?

President Boutet: One continuous trip. There has been considerable discussion, and as long as only one railroad had one brass to charge to that journal, I do not think there could be any exceptions taken to it.

At passenger rule 14 the time having expired, no further discussion was had at this session.

Mr. O'Donnell: Before the parties leave I would like to serve notice that it is my intention at this time to ask that our constitution be amended, so that the term of our president hereafter will be but one year. I make this with the confidence that a majority of the members will accept it in the spirit that it is intended. The association in its infancy was compelled more or less to continue officers in control of offices for the simple reason that the membership did not permit of timber enough to pick from to fill the offices. I am going to offer that as an amendment effective this year. And that the term of our executive officers be but two years.

Mr. Shultz: Mr. O'Donnell's motion at the present time is inconsistent.

President Boutet: He is giving notice at this meeting that he is going to give the resolution. I say that it is necessary that it be in writing to be acted on.

It was moved by Mr. Trapnell that a vote of thanks be extended to Messrs. Stark and Hodgson who read the rules.

Seconded and carried.

Thursday Morning Session.

President Boutet: I want to congratulate the members in being present at all the meetings.

Mr. Hodgson: The members want to bear in mind about the gauge used for the 80,000 pound passenger cars.

Rule 17.

Mr. Hitch: The number of atmospheres of gas and the number of holders. I do not understand about the number of holders. I suppose that it means give the size of the holders.

President Boutet: I would state that it is necessary to specify the number and size of the holders, either by their dimensions or by their number.

Mr. Bradley: The way we have been handling it, if a car were equipped with three holders, we would issue a card for three No. 580 holders; that is exactly the way we handle it, so we can arrive at the number of receivers.

Mr. Curran: I do not believe a discussion is neccessary because if a railroad company does not furnish the information they cannot make a bill. We had trouble until we got the inspectors educated to giving the number and size of the holder.

Mr. Forest: The practice in Toledo is to give the number of holders together with their size, through the number of atmosphere shown. We must give that information or we cannot bill.

Mr. Hodgson: One thing to be taken into consideration in connection with gas holders, especially the shop men should take notice. I have noticed that where there were two No. 580 and one 530 tank and the 530 is the middle tank, the numbers outside are stenciled three 580. That means that the company is paying for gas that it does not get. I think every foreman should watch carefully to see that each car is equipped, if there is more than one tank,—that the tanks should be of the same dimensions, so there could not be any possibility of paying for something that the railroad does not get.

Rule 22.

Mr. Reed: This is the first year that we have had a rule covering the size of air brake hose on passenger cars. When all the roads are using one size of air brake hose on both passenger and freight equipment and have been for a number of years, it will be all right. There are a large number of Western roads that are using 1 1-8 and 1 1-4 inch hose on passenger cars and have a large stock of that hose on hand. The lines East of Buffalo tell us to remove this hose on account of them being under size. This rule goes into effect on September 14. Can we remove the hose from the Western cars that are under size and charge the new hose to the owner?

President Boutet: Under my impression of the rule you would have no right to remove the hose on passenger cars, as long as it was not defective, even if it is not up to 1 3-8, but if you apply a hose, you should apply 1 3-8. However, rule 21 says "Air brake hose applied must be made in accordance with specifications for M. C. B. standard 1 3-8-inch hose, and so labeled." I would not take it from that that you would have any right to remove a hose from a man's car that did not comply with that, but if you applied a new hose and attempted to bill him, it should be 1 3-8 inch the same as on other cars.

Mr. Lynch: I would like to know who he should charge the hose to when he applies a standard to comply with the connections.

President Boutet: I stated that he had no authority under these rules to change the hose and charge it to anybody.

Mr. Shultz: This is delivering line responsibility and I will assume that if these connections will take the stand that they want this hose changed, it would be perfectly right to ask for a defect card at the time of interchange.

Mr. Hodgson: Might I ask Mr. Reed if he received a coach from a Western connection with 1 1-8 or 1 1-4 hose and it were in perfect condition, would he remove that hose simply because it was less than M. C. B. standard?

Mr. Reed: Yes, and I have been doing that for some time in order to meet the requirements of the Eastern connections.

We remove the hose from the car and re-apply it.

Mr. Hodgson: But you make no charge to the company owning the car?

Mr. Sternberg: It appears to me you would have to protect yourself in interchange the same as you would on freight cars. If you do not protect yourself you will have to pay the other fellow when you deliver it back.

Mr. Shultz: It seems to me that this will have to be handled the same as we were obliged to handle the freight cars when the rules were changed in order to protect ourselves at the time of interchange. There are a great many cars delivered that we do not return over the same route and we should get a defect card at the time of interchange.

Mr. Curran: I think that is the only proper way to handle it. It is only an appendix to freight car rules and should be handled the same.

Mr. Smith: I do not agree. I believe it was the intention that when hose are applied the M. C. B. 1 3-8 must be used. I do not believe it was intended to hold up the passenger trains as we did freight cars.

President Boutet: I acknowledge that I was mistaken. I did not notice that the delivering line was responsible, but the heading of the rule so states. If that is the case I think the only alternative is to take the hose off before delivering, or card for it on delivery. If you do not do that I do not know what protection you have. You remember this association tried to discourage taking care of that and we were sat down on.

Mr. Smith: It says "applied."

President Boutet: Yes, but it makes the delivering line responsible. How can we make it responsible except at time of interchange?

Mr. Head: The freight rule says that it must be new when it is applied and charged to the owner.

Mr. Bradley: I do not understand that this rule condemns any 1 1-8 air hose, or inch air hose on September 1st. My interpretation is that any hose that it will be necessary to apply after September 1st, must be 1 3-8. I do not understand that you can hold up a car for a hose that has been on a car for the past six months or a year.

Mr. Reed: Of course you all understand that it is the first year that we have had this rule. We have been trying several years to get it. The rule goes into effect as I understand it, Sept. 1st. We have been, as I stated, changing these hose that belonged to the Western roads, at our own expense, and it would appear to me that we have the right now, after Sept. 1st, to remove the small hose and apply the standard 1 3-8 inch and charge to the owner. But there is a large number of these roads that have these small hose on passenger cars as their standard—1 1-8 inch and 1 1-4 and so labeled; but this rule plainly states that they must be 1 3-8.

Mr. Hodgson: It occurs to me that this road cannot bill owners for that wrong air hose. It is a delivering line defect and you should have a defect card before you can make a bill. Is the delivering line going to give you a defect card for that? Can you demand a defect card for that? I do not believe you can bill the owners direct for wrong air hose. It is a delivering line defect and you have got to have a defect card.

Mr. Hodgson: I move that it is the sense of this association that wrong air brake hose on passenger equipment, which would be less than 1 3-8 inch in diameter is a delivering company defect and you cannot, under any circumstance, bill on the owners without a defect card.

Motion seconded.

Mr. Smith (Erie): I will read rule 58 and rule 21. One reads "applied" and one says "equipped." I do not understand that a car passing in interchange is subject to a defect card on changing of hose in the passenger car rules, even though this delivering company defect extends to the end of page 116. Surely the delivering company is not responsible for depreciation and that is rule 18.

Mr. Curran: I believe I will change my opinion after reading the preface for freight and the preface for passenger. I see there is a difference in the third paragraph. I believe it is ncessary to demand a card for wrong hose.

Mr. Hitch: I want to call your attention to the fact that this refers strictly to air brake hose and not signal hose.

Mr. Wymer: I would like to inquire what object the receiving road would have in removing that hose if it were not defective?

President Boutet: The way you put that compels me to answer as to my view. Suppose a superintendent of motive power decided that to get the proper efficiency of brakes; it was necessary to have a hose of certain size and he issued instructions that he would not allow any cars to be run on a road without a certain sized hose; What is the man at interchange to do except demand an M. C. B. defect card? That is my personal opinion.

Mr. Wymer: There are a number of roads having a standard inch hose and there are a good many positions taken by superintendents of motive power that they will not handle cars under certain conditions, but I think that would be a question to settle between the two roads. I cannot see anything in these rules that would in any way entitle the receiving line to take a stand for

a defect card. This reads very plainly that a hose applied must be in accordance with the specification, and the only feature I see to the rule different is that it makes it prohibitive to perpetuate a hose which is less than 1 3-8-inch.

Mr. Reed: I will explain that in this way: There has never been any instructions issued by any of the lines but our Eastern connections around New York have taken exceptions to passenger cars equipped with hose smaller than 1 3-8 and for that reason we have not allowed them to go east of Buffalo. The Michigan Central is removing such hose at Chicago; the Nickel Plate at Buffalo, before delivery to the New York Central, but we handle all those cars to go east of Buffalo for delivery to another line at New York, unless they have M. C. B. 1 3-8 hose.

President Boutet: Do you cut out the inch air pipe?

Answer: No sir, we do not. We allow them to go with inch air pipe.

Mr. Shultz: I have been reading a little further and I feel now that it is not a delivering line defect; that the only reference this has to the matter would be that any air hose applied after September 1st, for which a bill would be made, must be M. C. B. standard 1 3-8 inch. And the only redress that the owner would have in case of having a hose applied after Sept. 1st, would be to get joint evidence and lick the party making the wrong repairs.

Mr. Sternberg: The way I interpret that rule now is that it is not the intention to remove any small air hose from the passenger equipment unless it is in a defective condition. When it is defective, they must apply standard 1 3-8 inch in order to be reimbursed for the change. If the hose is bursted and you put on 1 3-8 inch hose, you can bill for it.

Mr. Hodgson: In support of my motion I beg to disagree with my friend here. It says distinctly at the top of page 115, that delivering line is responsible; there isn't any question about it. A wrong air hose on a passenger car cannot be charged to the owners or any one else unless you have a defect card covering the defect.

Mr. Elliott: At the top of page 115 it says: "Delivering company responsible." The next rule is flat spots and rule 17 is gas in the holders; that is receiving line.

Mr. Hodgson: That is delivering company.

Mr. Elliott: That is all delivering company defects?

Mr. Hodgson: Yes.

Mr. Elliott: When you apply a new air hose on account of a bursted hose, you are to apply a 1⅜; I do not believe it is delivering line defect.

Mr. Hodgson: If it is bursted it is owner's defect; but if it is undersized it is delivering company's defect.

Mr. Pendleton: I made up my mind that I was not going to ask for the privilege of the floor. I was called down yesterday for jumping up so often, but I cannot agree with my friend from Port Huron on this rule. He says that rule 115 is all delivering company defect. As I see it the defects are designated (a), (b) and (c). (a) is owner's defect; (b) delivering line, and (c) line expense. I do not know what is meant by the letter (d). That comes under (d). It is not designated. I do not believe it is intended to change the hose, but if it is changed you must apply 1⅜; he certainly would not change a hose if it were not defective, but if it were defective and he changed it, it would be necessary for him to apply 1⅜ inch.

Mr. Bradley: I do not want to contradict Mr. Reed's argument. He has his instructions and has to obey, but my interpretation of the rule is that we cannot refuse to card for 1⅛ air hose. There is nothing in the rule that would make it delivering company defect. It simply says when you apply the hose. I will interpret that to mean when it is necessary to apply on account of a bursted or broken coupler to make it necessary to apply the hose; you would be obliged to apply a 1⅜ inch hose. I do not think I would undertake to hold up a car on account of a wrong hose.

President Boutet: If you had to hold it up, what would you do? He says he had to do it. He wants to know how he could protect everybody according to the rules.

Mr. Bradley: I think it would be necessary for us to take the matter up in order to get protection.

Mr. Wymer: I cannot see that simply because some railroad takes the position that it will not accept a car in that condition that it changes these rules in any way. Some roads serve notice that they will not accept passenger equipment with cast wheels, but the rules do not provide for having cast wheels changed at interchange. Mr. Hodgson's theory that this is a delivering company defect on account of the heading at the top of the page, I think is not well taken. If so, I wonder in what position he would place Rule 22.

Mr. Gainey: If I understand the rules correctly, the M. C. B. rules and the arbitration decision—the arbitration committee is trying to have noting but 1⅜ inch hose running throughout the country. If a company elects to run a smaller hose than that on their own line, and they deliver that car to another line, then they become responsible for that hose, and should put an M. C. B. card on just as they should in freight service. And the receiving line should protect itself against the delivering line. If they do not, they become responsible for it themselves. As I have always looked at the rules, it is a matter of getting rid of all hose excepting the 1⅜ inch.

Mr. O'Donnell: I was going to ask how many cases of this kind came up. Mr. Reed raised the question; perhaps it is one case every six months or a year.

Mr. Reed: I will say that it is 100 cases every thirty days. We have an accumulation of under-sized hose and we do not know what to do with it.

Mr. Hanson: I cannot agree with the gentleman on my right. While Mr. Reed has instructions from the New York Central lines, I think it is a matter strictly up to the New York Central. We get cars from points of connection and we change the hose; when the cars are returned we put the hose back on the car. I believe the intent of this rule was that no hose when applied should be applied unless it is 1⅜ inch hose, and I do not believe we have any right to ask a card from a delivering line unless it is equipped with 1⅜ hose.

The question was put upon the motion and carried.

President Boutet: We have with us this morning a gentleman from the freight department who has been very much interested in the association. He is general freight agent of the Michigan Central and president of the Transportation Club of Toledo, which I believe is the biggest railroad organization of this city. Mr. Conlin.

Address of Mr. Conlin.

Mr. President and Gentlemen:

We sometimes put cars in a hole, but you put me in one now. I am not an orator, and I did not come up to make a speech. I think your president has taken an unfair advantage of me. I have had the pleasure and honor of his personal acquaintance for some time and through his invitation yesterday, came back from a business trip to be present at your deliberations. I must say that while the first feeling that brought me here was one of curiosity, I was very much interested as I listened to the topics pertaining to the good of your body and the good of the railroads in general. I think if you were going to stay in our city I might ask permission to be a daily visitor.

In the freight department, to which I now belong, being of a modest disposition myself and peaceably inclined. I never like to fight with anybody, but I could often have been arrested for what I thought about the car repair man. We do not belong to a business; we belong to a profession. I am not an old man in in the class with your president and a few others here, but I am almost on the eve of my thirty-ninth consecutive year with the New York Central system, and I have seen some changes in railroading. We are getting together and making one system out of the railroads—one department. We have departmentized railroads too long. There are three essentials, in my judgment, for the railroad man: Ability, energy and loyalty, and I think these three requisites are possessed by this body here. I am not given to throwing bouquets, but I want to tell you gentlemen in all sincerity that I have been in many meetings of railroad officials from general managers and presidents down, and I can say truthfully that I never looked into the faces of a more intelligent body of men than you are, and the car repair department I know is perfectly safe in your hands.

From a car standpoint I am interested in anything that keeps the car moving. We haven't anything in railroading but a gigantic proposition. You are the workers; we are the diplomats who buy the commodities that we trade in, which is the transportation of freight and passengers; we are selling these just as the groceryman sells his sugar. We are branded "White Line," or "Blue Line," or "Merchant's Dispatch." It is graded on the expediency by which we transport from one place to another. The time of putting a car in the hole, or putting it on the repair track, and letting it stay there until somebody got ready to get it out, has gone, and the railroad that hasn't energy and a lot of men like you to keep its trains going, is going to fall behind in its tonnage earnings.

There is a great deal to be said. Our business is only in its infancy. Take the gigantic transportation of the world, with more than one-seventh of the entire population engaged in the transportation business—a business that occupies the time and attention and gives a livelihood to more than 150,000. It has done more to build up manhood; it has done more for the cause of temperance and all those things that go to make perfect manhood, than anything in this country. I can remember in this city thirty-five years ago, when it was no uncommon thing to break into a barrel of whisky and everybody from the engineer to the yard men got drunk and let the engine die on the track. A railroad man was not looked upon much better than a prowler and a hold-up man, but it is different now. We are in a business where the eyes of everybody are upon us. We cut a prominent figure in the political world just now. Every peanut politician in the country is aiming his shafts at the railroad, until we have the business of the country in a chaotic state; nobody knows where he is at or what move to make that he may not be jacked up by some politician who does not know anything about the business in which he is engaged, still he knows how to run a railroad.

You have lots of work to do and I must not detain you. I am sorry I was late.

As I said, the successful railroad man must possess three requisites: ability, energy and loyalty. Ability is necessary; energy is desirable, but without loyalty they would be no good. If I had the doing of it, I would not employ a man, from the section man to the general superintendent, who did not adopt the road as his own road the minute he went on the pay roll; particularly interested in his department, but in a general way interested in all departments. The president of our road is the executive head, but without men in your departments looking out for its interests at all times, he would be a failure. Railroads have two assets: The finances looked up in Wall Street and the loyalty of its men. They can get along without the assets in Wall Street; they can be dissipated by financial conditions, but the loyalty of the men will always stick to them. We must be true to the company. We can do that most effectively by taking a sincere interest in our own business and at the same time watching the other.

We have two departments: You men are connected with the operating department; I with the traffic. We have too long

pulled apart. It is a sad commentary on railroading, but I have been in the business several years and I have no idea of the time and attention that you gentlemen give to the details of the moving of cars, the ones that we kick about. It isn't so much a technical question of how to move cars, but the real question is to keep them moving. Fight out your technicalities afterwards. Move the car irrespective of expense.

We have got to have departments of railroads that are not working at profit.

I was talking to the manager of a large department store going through the tailoring department, and he said: "We have fifty tailors." I said: "Does this end of it pay?" He answered: "It never brought in one dollar, but it is necessary for the maintenance and prosperity of the balance of the departments." So we have to have some department that is run at an expense, that has to sacrifice its own department for the good of the whole. It may cost more to repair a car than to unload it, but if it can be repaired and go forward quicker than to unload it, it ought to be only a question of time, and not a question of expense. Time is everything. The railroads have changed the whole business of the country.

We will never go back to the old way. There isn't much difference between fast freight and express. I can remember when we did not have to promise from New York to Toledo any better than fifteen days. The Merchants Despatch had 8; we did it in 20. It might be 12 today and 30 tomorrow; but if you cannot promise today a three day delivery from New York to the store, you are not in it. Men are ordering by telephone. We deliver freight in Chicago the third morning from New York. If we don't we have got to get out of business. You can see that we cannot keep these cars on the side track waiting for bolts and nuts very long, the expense has to be pro rated.

We are adopting the same method in the payment of claims. Where it took a month, we pay them now and fight it out afterwards. We are dealing with an intelligent lot of people. The business men of this country know when they are getting what is promised them and the time has gone by, if it ever existed, when we can say to the business world "The public be damned." Gentlemen,I thank you.

President Boutet: In answer to the gentleman from Toledo in the freight department, I feel that words are inadequate. We have one stand-by we can always depend upon, and I would ask Mr. O'Donnell to reply to the gentleman.

Mr. O'Donnell: I do not know as we should spoil a good thing by handling it too much. Your apology for not being an orator was out of place. But we do not want to catechise it too much. We will take it home with us and think it over. We appreciate without question the words that Mr. Conlin of the Michigan Central has so aptly put before us. One thing that appealed to me very strongly was the fact that we should get the load through and settle our troubles afterwards. That is a sentiment that we ought to take home with us. Always remember that the company's interest is the paramount issue of what we are maintained and paid for, and if there is any little penalty connected with a transaction, sit down and settle it among yourselves. And while we are in the yards we should not look at anything except the interests of the company we represent.

I think we should feel very grateful to Mr. Conlin who has spoken to us so appropriately, and the compliment he has paid this body of men. I feel confident that it was sincerely expressed and came from the heart. And I move you that it is the sense of this body that we extend to the gentleman our appreciation by a rising vote of thanks, and assure him that we highly appreciate the sentiments expressed as a higher official, and that we will take them home with us and try to carry them out. And that Mr. Conlin be extended an invitation to attend our future meetings.

Seconded and carried unanimously.

Mr. Conlin: I thank you for the honor. It is an honor, when I feel that I am not an orator—never went to school a day in my life since I was ten years old. I worked on the section. I have been in the railroad game from the ground up. I am not an orator, but I have these interests at heart, and what I say might be rounded out in grammatical terms, but I thought when looking in your faces that I got my schooling where you did, in the school of hard knocks. There are not many men in the railroad work who carry a sheep-skin and I am glad to say that we are not the poorest men.

Mr. Shultz: The motion we passed just previous to Mr. Conlin's addressing us carried with it, as I understand it, the necessity of a defect card, providing we wished to change under-sized air hose and get paid for it?

President Boutet: That would be my understanding. If you want to remove air hose on account of the size you must receive a card from somebody and bill on it.

The report of the executive committee on new members was read as follows:

The Executive Committee wish to report that they have acted on the applications of the new members, the names being too numerous to mention in this report, but will appear in the report of the proceedings and their applications have been approved.

Mr. O'Donnell: I would move you that we amend our constitution making the term of our presiding officer one year, with the explicit understanding that the vice-president suceeeds to the president's chair each year; also that our constitution be amended to make the executive board consist of seven elective members instead of five, as at present, the term of office to be two years; members elected alternatively, three in one year and four in the following year. This will be drawn up in form, but the intention is understood from the explanation given.

Mr. Shultz: In explaining that resolution, I want to say that it is the idea of the members of the executive committee that it was unfair to have a few hold the office continuously, as there are so many bright, intelligent men belonging to the association, and for the purpose of changing about this condition this resolution was introduced. It was also our idea that in electing the executive committee that they be elected from different parts of the country so that the association may grow and expand.

President Boutet: If there are twice as many voting for it as against it, it will be considered as carried. I believe the recommendation is very good. It is absolutely necessary that we take some action. All in favor of changing the constitution as recommended, please rise to their feet and remain standing.

The vote was unanimously in favor of the recommendation.

President Boutet: It is customary to pass a set of resolutions to those who have contributed to make the meeting a success. First of all we should recognize the members from Toledo who have done such good work in our behalf.

Mr. O'Donnell: I do not think it requires any talk. I have been in the lime light a great deal, but it is necessary, I suppose, for some of us to do more talking than others. But there isn't a person within the sound of my voice but who will agree with me that the Toledo convention of 1911 has been the most successful, most business-like, most cordial and useful convention that this association has ever held. I think it is only proper and just that we should recognize the untiring efforts of Mr. Stark, Mr. Stoll, Mr. Forest and the good gentlemen of Toledo and the higher officials and railroad men who have attended our meetings, and that we tender them a rising vote of thanks, without question. We shall carry back home with us a most pleasant memory of our Toledo gathering.

Seconded by Mr. Bradley and others and carried unanimously.

Mr. Stark: I was going to say on behalf of the Toledo delegation, that we invited you to Toledo; we are glad you are here and only hope tnat you had a good time. The Toledo roads are well represented. We have 22 members in Toledo in this organization, and every road is represented by one or more men, and I am sure that wherever the convention goes next year you will find the 22 members at your convention.

Mr. Head: If I remember correctly when our Brother Stark was elected a member of the executive committee at the last meeting, in the city of Washington, he stated that he appreciated the honor and that he would try to merit the confidence placed in him by the votes of this association. I feel that he has delivered the goods, and I believe I express the opinion of all present.

President Boutet: I think we should give a vote of thanks to the housekeeper.

Mr. O'Donnell: I do not know how you met the housekeeper.

President Boutet: It takes a man from the West to meet the ladies and we have endeavored to represent that portion of the country.

Mr. O'Donnell: It is due the hotel people and also the press of Toledo for the kind consideration they have extended the membership of this convention, that a vote of thanks be tendered them. We have been in many hotels; we all know that, but the rank and file of the Boody House of Toledo is just as good as the big fellow on top. I think every member has been given the utmost courtesy. I know I have and wherever I go will speak for the Boody House first, last and all the time. I move that a vote of thanks be extended without question.

Mr. Schlacks read the names of the firms contributing as follows:

American Brake Shoe & Foundry Co.
American Steel Foundry.
American Mallables Co.
American Car & Foundry Co.
Bettendorf Axle Co.
Chicago Railway Equipment Co.
Columbia Nut & Bolt Co.
Columbia Brake Shoe & Foundry Co.
Galena Signal Oil Co.
Griffin H. Deeves Lumber Co.
German American Car Co.
Gould Coupler Co.
Hutchins Car Roofing Co.
Imperial Appliance Co.
Mobray & Robinson Co.
McCord & Co.
National Mallable Casting Co.
Pratt & Letchworth Co.
Procter & Gamble Transportation Co.
The McConway & Torley Co.
The Joyce-Cridland Co.
Lehon Co.
Union Draft Gear Co.
Westinghouse Air Brake Co.
U. S. Metal & Mfg. Co.
W. P. Taylor Co.
Franklin Ry. Supply Co.
Buffalo Brake Beam Co.
W. H. Miner Co.
Penna Specialty Co. and N. Z. Graves Co.
Imperial Car Cleaner Co.
Ward Equipment Co.
T. H. Symington Co.

Mr. Hodgson: I take great pleasure in offering a motion that a rising vote of thanks be extended to those who have contributed toward our convention here, for the manner in which the members and their families have been received during our visit here.

Seconded by many and carried unanimously.

Mr. O'Donnell: I believe Mr. Webb, Mr. Schlacks, Mr. Wright and Mr. Tawse fully appreciate how we feel toward them without any lengthy talk. I know I express the wish of the whole association that Mr. Webb and his co-workers will have the best of good health in the future and that some day we may see their names at the head of this association as president. I ask for a rising vote of thanks.

Carried unanimously.

Mr. Webb: It has been a pleasure to work with you here, with the co-operation that each and every one has given us, and I can truthfully say that our work for this convention has been easier and more pleasant through the help of the members of the association and the committee than it has ever been my privilege to work on. We have given you our best efforts and done all we could with the material at hand, and I only hope that if we serve on any other committees that our associations will be as pleasant as they have been with this one. I forgot for the moment the special work that was done by the reception committee of the car foremen. I think that a special vote of thanks is due them for their work in promoting sociability among the members.

A rising vote of thanks was extended the Toledo reception committee.

Mr. Stark: I move that we extend a rising vote of thanks to the stenographer, Miss Unkenholz.

Voice: Is that all she gets?

President Boutet: She will be well paid before we leave.

The motion was seconded and carried.

It was moved by Mr. Stoll that a vote of thanks be extended to the mayor of the city, Mr. Paine, Mr. Downing, Mr. Kinney, Mr. Conlin and Mr. Fogg for their addresses.

Seconded and carried unanimously.

Mr. Trapnell: I desire at this time to offer a resolution extending a vote of thanks for the courtesies extended to this association and its membership at the last convention by Mr. Bruce V. Crandall in the matter of furnishing each and every member a copy of the minutes of the meeting, with his compliments.

President Boutet: I do not believe the credit is all due to Mr. Crandall. It is true that it is through Mr. Crandall that we obtained it, but it was the firms who advertised in it that made it possible.

Mr. Trapnell: Those firms should be included in the motion.

Motion carried.

Mr. Lynch: I think we should not forget to extend a vote of thanks to the Terminal Railroad and all affiliating roads for their courtesy in giving us this trip around the city.

Seconded and carried.

Election of Officers.

Messrs. Head and Hewitt were appointed to act as tellers.

Mr. Waughop: Way back yonder in the past we had a so-called president, who was followed by another, and only two presidents have borne the heat and burden of the day. I rise to the nomination of one who has been faithful. The time is very opportune for this association to cut down keeping a president for seven years. Our talent has gotten so that we can afford now to make a president every year or two. I am going to place in nomination one whom you all know and all like. He is a Westerner and we cannot afford at this time to ignore the West. I put in nomination Mr. F. W. Trapnell of Kansas City.

Mr. Stark: I desire to second the nomination of Mr. Trapnell for president. He has served on our executive committee for a number of years, has served as vice-president for three years, as I remember it, and has given the association faithful service. It is only due that Mr. Trapnell be not only nominated but elected president of the association.

I would move you that the rules be suspended; that the nominations close and that the secretary be instructed to cast the ballot of the entire association for Mr. Trapnell.

The motion was seconded by many and unanimously carried.

Mr. Head: I take great pleasure in receiving from the secretary the unanimous vote of the association for Mr. Trapnell as president for the ensuing year.

President Boutet: I present to you the badge of authority as president of this association and may your term of office when ended be as gratifying to you as mine is in leaving the chair. I can only say that I am under many obligations to the members for their loyal support and for attending the meetings so regularly, not only at this meeting, but every preceding meeting during the term of my office, and I trust that you will be as successful in your term as I have been in mine.

President Trapnell: You have conferred upon me one of the greatest honors that it is possible to confer upon any individual of our membership It is evident from the splendid action you have taken that you have reposed confidence in my ability to be able to guide this ship through the coming year on to prosperity; to guide this ship so that when I come to give an account of my stewardship to you that I can look over the faces of the gentlemen here present and as many more as we can get—if it were doubled I would only be too glad to have them—and in that manner secure the more hearty co-operation of the higher officials which we are gaining every year. I trust that I will have the same co-operation with the membership and the officers of this association that my predecessor has had. If we work together in the future as we have in the past I have no doubt but that this association will become a power for good among all the railroad organizations of this country, always remembering that we represent the railroad—not a particular department, but the railroad which hires us and pays us. It is our duty to see that its business is handled with promptness and dispatch, and we can do that by assembling together and understanding how this man and that man—this point and that point, are handling their cars. And by gaining the information and understanding as Mr. Conlin says, there would not be any laying on the side track. He would be pleased and so would we. I trust that I willl have the co-operation as I outlined before. I thank you.

President Trapnell takes the chair and presides over the balance of the meeting.

Mr. O'Donnell: Coming from the Eastern section of the country where we have a large membership, and canvassing the individual members of this association, I rise to place in nomination a gentleman for vice-president, whom I feel confident at this time will meet your every expectation in the future. He has shown during this convention that the interests of this association are the ones nearest his heart. And I take great pleasure and deem it an honor to place before you for your vice-president the name of J. L. Stark, a gentleman whom I have known for years past and who is known to many of you. I feel confident that you will make no mistake in nominating him.

Seconded by many.

Mr. Boutet: I move you that the rules be suspended, that the nominations close and that the secretary be instructed to cast the ballot of the convention for Mr. Stark.

Seconded and carried unanimously.

Mr. Head: I take great pleasure in announcing that the secretary has cast the ballot of the membership for Mr. J. L. Stark and that he has been unanimously elected vice-president of this association.

Mr. Stark: I desire to thank you for the honor you have conferred upon me. I am with this association heart and soul. I consider it one of the best organizations in the country. I was particularly glad to have my superior officers with us yesterday and to hear the words expressed by him favorable to this association. I feel that instead of this association being considered in its infancy, it is already a full grown child, and I think the officials are beginning to recognize the fact that this is a large organization and one that is accomplishing much good. I thank you.

Mr. Boutet: I would ask the privilege of the floor and I move you that the present secretary who has served us so faithfully be continued in office. I do not think there is a member of the association who knows better than I, what the secretary has done in previous years. While it is true that Mr. Skidmore is a particular friend of mine and I am imposing a hardship stronger than any of you think, upon Mr. Skidmore, I move you that Mr. Skidmore be elected unanimously and that the president cast the ballot of the association for Mr. Skidmore as secretary.

Seconded by many and unanimously carried.

President Trapnell: By the authority of this association, I cast the entire ballot of the Chief Interchange Car Inspectors' & Car Foremen's Association of America for Stephen Skidmore for secretary-treasurer.

Mr. Skidmore: I will have to agree with what our past president has said that it is imposing a hardship upon me to accept this office and that no one knows as well as he the hardship that it does impose. I do not desire the office but for the welfare of the association, as it has been in the past, I will accept it under these conditions, to help the association along to the best of my ability. When this association adjourns, it means to go back home and work continuously the ensuing year until we can meet at some point in convention, to make these conventions a success. In conjunction with the president, there is a large amount of this work that I have done that might be let go, but I would call it neglect. There are so many small things that come up that one could pass by, but at the same time, some might consider it a slight. It requires an endless amount of work, and as you all well know, men who are employed in the car department of a railroad are busy people. I have neglected a lot of my private work and pleasures to give attention to the company I am working for and this association, and I will try to assist the president in the ensuing year, to make our next convention a much larger and better one.

I must say that this has been one of the best meetings that we have ever had. It is larger, and you could at almost any time call for a division vote and count up the full attendance here; that is something that we could not get at any other meeting in this country held in a place of this kind. There would be from one-third to half the members out sight seeing or some place. For that reason this association is going to have the name of workers. They do not come for pleasure. Of course, it is necessary to have a few of the pleasures along with the work, which the entertainment committee has so kindly given us.

I want to thank you for the unanimous election as secretary and treasurer.

Mr. O'Donnell: With your permission, I would like to ask that we extend to the young gentleman who is absent from this meeting, the confidence of the membership, by asking the unanimous election of Mr. McMunn on the executive board for one year.

Seconded by Mr. Skidmore.

Mr. Shultz: I think the members of this association might want to put him in for two years. I do not want to be antagonistic, but I believe if Mr. McMunn's name is left on the list for the executive committee that he will receive the vote necessary to keep him in office two years.

The following names were placed in nomination as members of the executive committee, and the members received the number of votes set opposite their respective names.

W. L. McMunn	100
F. C. Shultz	96
J. L. Hodgson	94
Albert Kipp	87
E. R. Campbell	74
J. J. Gainey	84
F. H. Hanson	71

E. Pendleton 58
A. S. Sternberg..... 56
C. J. Wymer..... 39

The seven receiving the highest number of votes were duly declared elected, the first four for two years and Messrs. Campbell, Gainey and Hanson for one year.

The following cities were suggested as meeting place for next year: Port Huron, Montreal, Pittsburg, Atlanta, Ga., Minneapolis and Denver. A trial ballot resulted in favor of Montreal; however, the matter is left in the hands of the executive committee.

President Trapnell: This morning there was a vote of the men taken as to where we would like to go for our next meeting, but there is one other little duty for which we have called the ladies, and that is sociability—to extend the cordial greetings that we have to our past president—our retiring president, the one who at this time steps out of the chair and takes the position as chairman of the executive committee—and I would call upon Mr. O'Donnell, the silver tongued orator of the Niagara Frontier, to step forward and extend to Mr. Boutet the feelings of the association.

Mr. O'Donnell:

Dear Ladies and Gentlemen:

Our worthy president in the past has called upon me to inflict myself upon my friends, but I did not expect our newly elected president to call upon me to give some more hot air. However, I will do my best as briefly as possible to try to meet the expectation of our esteemed president and the friends of Mr. Boutet.

It is customary through life, and the Bible tells in the scriptures, that to have pleasure, you must have more or less regrets and sorrows. The opportunity presents itself today more or less in line with this occasion—the parting of friends—the parting of friends who have been intimately connected with duties of this nature, creates a pang in the human heart. I think it is no exception to this sentiment to say that there isn't a person within the sound of my voice but who fully agrees with me in this respect. Some may feel that the honors carried by these high positions fully merit and do away with the troubles commensurate with the same, but from my personal acquaintance and the work that we have carried on with Mr. Boutet for the past three years leads me to believe that the percentage of work more than overcomes the honors given. I know Mr. Boutet has done the work cheerfully and not in a measure of selfishness. In stating these facts it is only just that I should say that my attendance at many of the executive meetings has led me to arrive at this conclusion, without question. I will say that the Chief Interchange Car Inspectors & Car Foremen's Association will never be mentioned in the future, without recalling the name of its very able president who has carried the association to such a successful termination for seven years as president and twelve years as one of its very best workers. I know it is the wish of this association universally that Mr. Boutet will have strength and wisdom and happiness for the remaining years of his life; that he may have the happiness of his helpmeet to carry him through, and that he may always carry with him the affection and the blessings of life.

I do not know what the committee have, but if it is what I think it is I do not know why they made the selection, because Mr. Boutet is always wet.

On behalf of this association, I deem it a great pleasure and honor to extend to you this little gift; as you keep it through the years to come, may it remind you, not of its intrinsic value, but more of the sentiments that we carry out in presenting it to you.

Mr. Boutet:

Mr. President, ladies and fellow members of the association:

I think I have been taken advantage of very unduly. During my term of office, especially since Mr. O'Donnell has been a member of the executive committee, which has been ever since he has been a member of the association, I always called on him to do my talking. On this occasion the president has taken advantage of me and asked him to make the presentation.

My work has been with the object that we should reach such a point as we have now reached, and it is more gratifying to me than I can find words to express. At the first meeting held in Kansas City. I took my wife with me, and Waughop and Mr. Cressy, of Omaha, and others told me I was a hen-pecked husband; couldn't go out without taking my wife. Possibly it was true. My back is pretty well scarred. My wife does not always censure me in public but I will catch it for this in the room. I believe at all times in bringing the ladies; it has been the upbuilding of this association, for when we have the ladies with us we are endeavoring to get somebody to provide amusement that would be enjoyable for both the ladies and the gentlemen, and more conducive to our good appearance the next morning. The association which we have built up is not only a credit to us but a credit to the railroads we are working for, and I believe that our general managers at the head of the organization appreciate that feeling. There has been in the past years up-hill work, and I think few of you realize what the pioneers had to work with to build up this association. It was not only a case of financial strain, but of taking rebuffs. Four years ago, going to the convention at Atlantic City, I was instructed to get some information along the New York Central lines, and that gave me a chance to stop off at Buffalo. I had heard a good deal about Mr. O'Donnell, and when I met some of the men at Buffalo I learned that they had the impression that we did not want any of the Eastern people in our association, and I am frank to say that they consented to come over and see how wild and woolly we were and attempt to curry us. We haven't a more enthusiastic set of fellows than we find in Mr. O'Donnell and the Eastern people. Now we have people from the South, and if we continue to grow we will have an association of which any one can feel proud. I feel that that is all the honor that could befall any man, and I am selfish enough to take a good deal of this honor to myself. I have not retired from this association. I expect to remain a member.

Mr. Waughop: I believe, ladies, that Mr. O'Donnell addressed you as "dear ladies"; I am going to call you "my boys." I am not talking to the men. The association has seen fit to keep Henry dry with an umbrella. It devolves upon me to take care of one of my boys. The association has sent a little token to the retiring president's wife; that is his father-in-law's daughter. But before I go any further I wish to say to our incoming president that I attended a little show in old St. Louis and heard a little song that seems to me very apropos of this occasion, and I want to give you one stanza:

"You never know how much you have got to know before you really know how little you know."

On behalf of the association, I wish to present to Mrs. Boutet a little bunch of flowers. I hope that you will not fade as quickly as they. May you take the St. Louis blessing with you. This is my latest toast: "Live until the Lord takes you but not too soon."

Mrs. Boutet: I thank you one and all.

Mr. Wymer: In all associations we have at least two prominent classes. The one in the majority are those who bring themselves rather prominently before the association by being ready to ask the recognition of the chair on most any question which may arise, whether they have anything of importance to offer or not, and they are usually found occupying the front row of chairs. The labors of these members extend through a period of three or four days while the association is in session.

The other class of membership is somewhat in the minority and instead of being in the front ranks is usually found in the background somewhere, performing quietly but actively the labors which really bear the fruits of the association. We have belonging to this association a member in that class in the person of our efficient treasurer and secretary, Stephen Skidmore, and this association has asked me to present to him a little token which, in a slight way, bears their appreciation for the good work you have done. In presenting you this fountain pen it is not intended to be any reflection upon the services you have rendered, but rather that it may in a small way make your burdens more pleasant to perform. It is not the wish of the association that its intrinsic value should be considered, but they wish you to accept it in the spirit it is intended—to convey the warm feeling that this association bears toward you, not only for your efficient work, but your value as a man.

Mr. Skidmore: I do not believe that I am able to say anything on this occasion any more than that I thank you.

Mr. Schultz: I wish to offer a resolution that we change our constitution so that the time of the meeting will be in the month of August, instead of September.

Seconded and carried unanimously.

The vote on a meeting place resulted as follows: Port Huron, 3; Montreal, 59; Minneapolis, 54; Pittsburgh, 9; Atlanta, 69; Denver, 55.

On motion of Mr. Lynch a rising vote of thanks was tendered the retiring officers.

Mr. O'Donnell: As one of the officers who has served this association for three years, I wish to thank you for the confidence placed in me. What little I have done was done with a sense of duty with pleasure connected with it. I trust that I will be able to attend these meetings.

There is a gentleman whose name has been before this association since its inception. I think it is only fittng that we should recognize the fact, and the great service rendered this association by Mr. Charles Waughop of St. Louis, by making him a life member of our association.

Motion seconded and carried.

On motion of Mr. O'Donnell the retiring president was presented with a gold badge.

Mr. Waughop: I thank you for electing me a life member. When I took hold of this association there were only twelve members. Mr. Boutet took hold of it with not many more, and now you are about 200. It is possible that in the years to come you will hear from me differently, and the honor conferred upon me now will always be remembered.

Mr. Boutet: We have a man who always remained faithful to the association. He and his good wife have been in constant attendance at these meetings ever since our meeting in Buffalo in 1901. He is not a man to get up and do much speaking on the floor, but he has been one of the members on whom we could lean when we wanted any information. I am going to ask that an exception be made and that Mr. Berg be presented with a gold badge, as retiring from the executive committee.

Seconded and carried.

Mr. Berg: I must agree with Mr. Boutet that I have not been a member on the floor very much, but I have always endeavored to do all in my power for the welfare of the association, and I have enjoyed it very much. I feel very much gratified to feel that it is appreciated in this way. I thank you very much and hope to be with you at future meetings. Any place you meet on the globe I will try to be with you and I will follow my old tactics and have at least two new members with me when I come.

The tellers were dismissed with a vote of thanks.

President Trapnell: As we are about to adjourn, I trust that when we go to our various homes that we will all have in mind the future welfare of this association, and any work that you may be able to do in the line of securing new members will be appreciated. If you will send the secretary their names, he will send the necessary blanks so that the membership of this association can be increased.

Thereupon an adjournment was had to meet at the call of the Executive Committee in 1912.

Recent Railway Mechanical Patents

RAIL-TRAVERSING TRUCK.

999,709—Louis H. Flanders, Pittsburg, Pa., assignor to the Elctric Storage Battery Co.

Patented August 1, 1911.

This is a freight truck designed for traveling on rails and so constructed that the driving mechanism is located entirely below the freight carrying platform. The truck is driven by an electric motor and storage battery.

CAR.

1,000,176—Frank S. Ingoldsby, St. Louis, Mo., assignor to Ingoldsby Automatic Car Co., St. Louis.

Patented August 8, 1911.

The invention consists of details of construction relating to a floor frame and the novelty consists particularly in the provision of cross shaped members having arms in compression and other arms at right angles thereto which are in tension or compression according to the location of the member, all of the arms being in substantially the same plane at the crossing. The arms have rounded upper surfaces and are clearly shown in the illustration.

999,709.

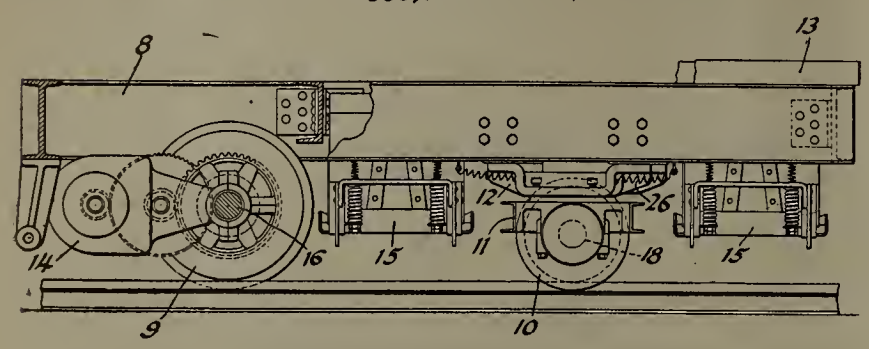

1,000,176.

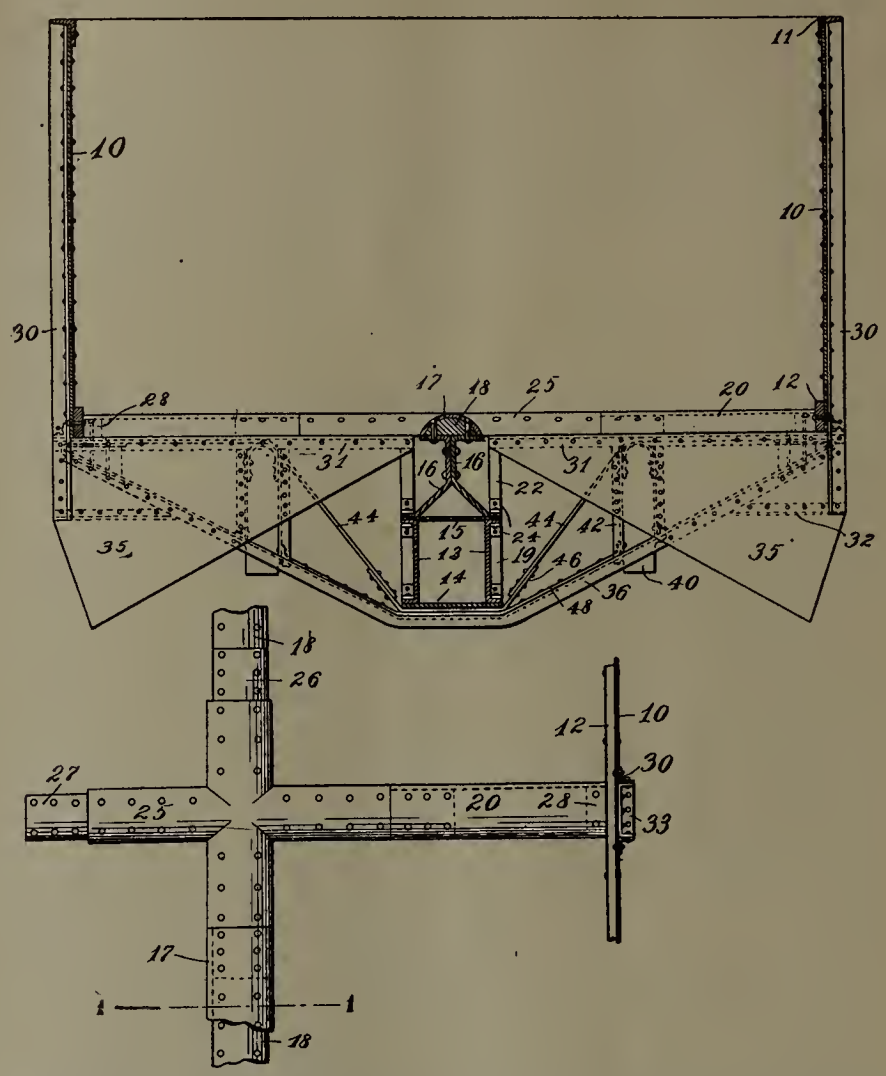

DRAFT RIGGING FOR CARS.

1,002,930—A. P. Prendergast and J. J. Tatum, Baltimore, Md.

This draft rigging is the combination of a draw-bar having a head whose end forms a portion of the convex surface of a sphere, with upwardly and downwardly projecting shoulders on either side and a yoke whose arms are united by a bridge wall, one of whose faces constitutes a part of the concave surface of a sphere; the yoke has inwardly projecting shoulders engaging the shoulders on the upper and lower sides respectively of the draw-bar head.

CAR COUPLING.

1,003,323—Chas. S. Bennett, Newport News, Va.

The herein described car coupler comprising essentially the following distinct elements, viz., the draw bar, a knuckle pivoted therein on a vertical pivot and including a rigid rearwardly extending tail piece having a vertical notch, a lock movable vertically in a plane at one side of the knuckle pivot, and an actuator

1,003,405.

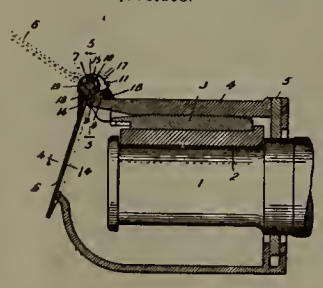

1,003,323

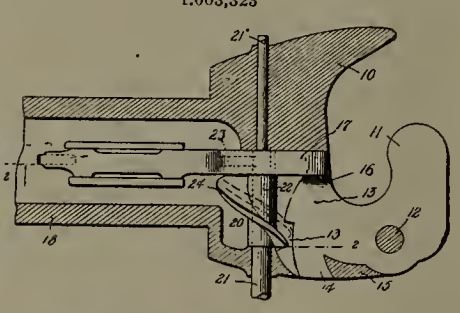

1,004,498

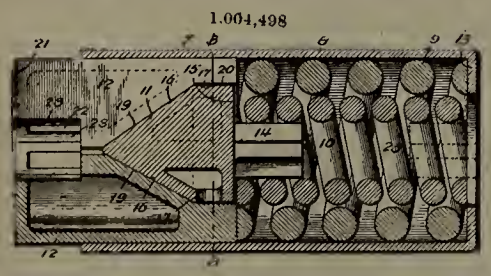

mounted on a horizontal axis extending beneath the lock and in the rear of the tail piece. The actuator includes a member which upon rotation of the actuator will lift the lock to unlock the knuckle and also includes a spiral cam extending into the tail piece notch, the cam being of constantly variable radius from one end to the other.

JOURNAL BOX.

1,003,405—John F. O'Connor, Chicago, Ill.

This device is a combination of a journal box and a lid. The journal box has an open inner end for the axle journal to project through and is provided at its outer end with a hinge member and a spring seat. The lid has a hinge member and a spring seat adjacent thereto and a C-shaped spring fitting at its ends in the spring seats of the journal box and lid and surrounding and externally housing the hinge members of the journal box and lid.

METAL CARLINE.

1,003,435—Edson C. Covert, assignor to Peter H. Murphy, Pittsburg, Pa.

A car roof comprising a plurality of cast metal carlines adapted to support the superstructure, each of the carlines comprising two elongated body members and an intermediate replaceable key member detachably secured to the body members. The outer ends of the body members have downwardly turned portions adapted to straddle the respective side plates of the car.

CAR DOOR.

1,003,563—W. S. Williams, Clinton, Ill.

A sliding car door comprising a main body portion, roll bearings, a door hingedly mounted in a cutaway portion in the upper end of the door, a hinged inspection flap in the upper end of the door, a keeper in the body portion of the sliding door directly beneath the lower edge of the door, a sliding bolt mounted on the door and adapted to slide into the keeper. Also vertically aligning brackets on the door and flap, a bolt slidingly mounted on the flap and adapted to rest upon the upper end of the bolt after passing through a bracket on both flap and door, and a cross bolt adapted to abut the upper end of second named bolt to prevent vertical movement of first and second mentioned bolts.

BOILER CLEANING DEVICE.

1,004,052—Vasil Mar Kay, Boston, Mass.

A cleaning device for steam boilers having, in combination, a cleaner, means for moving the cleaner horizontally within the boiler, and other means supported on the cleaner to move relatively thereto for imparting to the cleaner a vertical movement independently of the horizontal movement.

BRAKE SHOE.

1,004,218—Wm. S. Thomas, Renovo, Pa.

A brake mechanism including spaced side plates; a roller revolubly mounted between the plates, and adapted for frictional engagement with a wheel; a block slidable bodily between the plates and having spaced legs straddling the roller and engaging the end portions thereof adjacent to the side plates; and means for securing the block to an actuating lever.

1,003,563

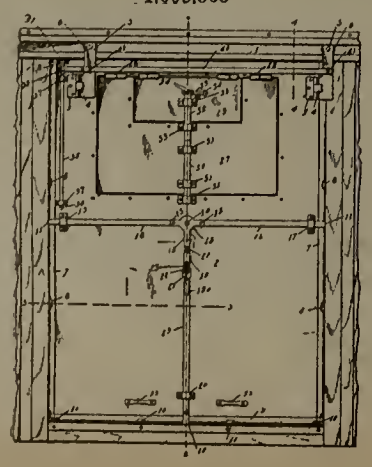

1,003,435

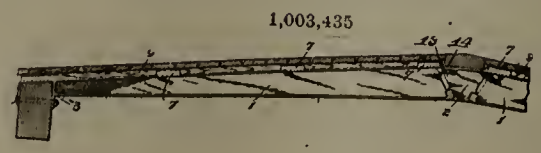

1,002,930

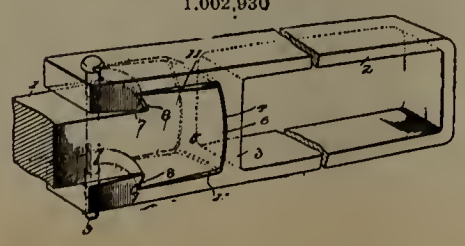

1,004,052

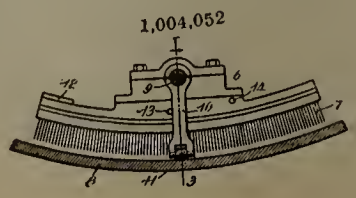

1,004,218

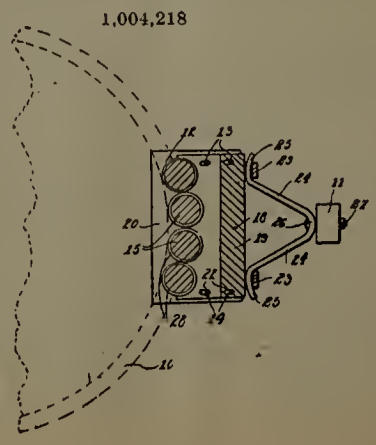

RAILWAY MASTER MECHANIC

Established 1878

Published by THE RAILWAY LIST COMPANY

WILLIAM E. MAGRAW, Pres. and Treas.
CHAS. S MYERS, Vice-Pres. LYNDON F. WILSON, Managing Editor
C. C. ZIMMERMAN, Bus. Mgr. OWEN W. MIDDLETON, Assoc. Editor
J. M. CROWE, Mgr. Central Dist. KENNETH L. VAN AUKEN, Assoc. Editor

Office of Publication: Manhattan Building, Chicago
Telephone, Harrison 4948
Eastern Office: 50 Church Street, New York
Telephone Cortlandt 5765
Central Office: House Bldg., Pittsburg, Pa.

A Monthly Railway Journal

Devoted to the interests of railway power, car equipment, shops, machinery and supplies.
Communications on any topic suitable to our columns are solicited.
Subscription price, $2.00 a year; to foreign countries, $2.50, free of postage. Single copies, 20 cents. Advertising rates given on application to the office, by mail or in person.
In remitting, make all checks payable to The Railway List Company.
Papers should reach subscribers by the 16th of the month at the latest. Kindly notify us at once of any delay or failure to receive any issue and another copy will be very gladly sent.

Entered as Second-Class Matter June 18, 1895, at the Post Office at Chicago, Illinois, Under Act of March 3, 1879.

Vol. XXXV Chicago, November, 1911 No. 11

CONTENTS.

Editorial—
- Weak Points in Design of Mallets....493
- Apprentice Instruction....493
- Third Man for Locomotive Operation....494
- Concerning the Railway Situation....494

Correspondence—
- An Interstate Labor Commission....496

Sweetwater Terminal, A., T. & S. F. Ry....497
Imaginary Day in Office of Secretary of Transportation....499
Mechanical Conventions, 1912....500
Going Some....500
Electric Locomotives for Hoosac Tunnel....501
Reminiscences of a Master Car Builder....503
Pop Valve Meter....504
From the Files of an S. M. P....505
Reinforced Concrete Roundhouse, N. Y., N. H. & H. R. R....505
Superheater Locomotives....509
Shop Kinks....510
- Chicago & Alton R. R....510

French 4-Cylinder Locomotive....512
Traveling Engineers' Association....515
Turntables with Motor Drive....515
New Rear End Lamps....516
External Throttle Valve....516
Electric Switching Locomotives....517
Model Machinery Plant....518
Some Advantages of Motor Drive....522
New Books....523
- The Application of Highly Superheated Steam to Locomotives....523
- Electric Traction for Railway Trains....523

Personals....524
Among the Manufacturers....525
- New Air Brush....525
- Automatic Swivel Brush....525
- Efficient Crude Oil Engine....525
- Portable Electric Drill....527
- New Literature....527
- Industrial Notes....528
- 20th Century Boring Tool....529

Members of the C. I., C. I. & C. F. Association....529
Recent Railway Mechanical Patents....532

WEAK POINTS IN THE DESIGN OF MALLETS.

Seven Mallet articulated compound locomotives of the 2-8-8-2 type, weighing 579,300 lbs., in service on the St. Louis & San Francisco have developed several serious weaknesses due to error in design. One of these points of weakness has evidenced itself by causing trouble with the parts forming the pivoted connection between the forward and rear frames. The pin, which is about four inches in diameter, is too small and the steel frame work forming its socket is continually shearing its small bolts and wrenching itself loose. Trouble has also been caused by a tendency of the casting, which forms the upper part of second slide bearing under the front end of the boiler, to work loose at its bolted connection to the latter, thus causing exasperating if not serious leaks. A third defect developed at the first attempt to turn one of the engines on a wye at Fort Scott, Kas. The curvature of the track on this wye is not so sharp as to cause trouble in the handling of consolidations, but, in the case of the Mallet, the flexible joint of the exhaust pipe, in turning to one side with the boiler, failed to clear the front equalizer spring hanger and breakage was the result. It has been found necessary to turn the engines on the table, cutting off the tender each time.

This same type of engine, in use on the Chicago & Alton, is giving serious trouble which is nearly all due to a too small boiler capacity. The engines were intended for pusher service when ordered and it is supposed that the designers allowed small boilers on this account. The performance is so poor as to cause a general dissatisfaction with the type among the men.

Until recently the Mallet locomotive has been considered more or less of an experiment. It has now progressed beyond that stage, however, and its popularity now depends upon the elimination of both major and avoidable minor defects in construction. The first and second defects above mentioned could hardly have been foreseen or avoided, but can easily be remedied in future orders. The third defect was a mistake pure and simple, as the maximum degree of curvature in track which a Mallet can successfully negotiate should be determined by the length of rigid wheel base, not by the location of fixed or moving parts above the frames.

There would seem to be little excuse for the too small boiler capacity mentioned with respect to the Chicago & Alton engines; clearance limitations are not responsible in this case. An English engineer of prominence once remarked that the tendency of American designers is generally to build boilers far too small when measured by standards adopted in England. Whether or not this is true, mistakes must be admitted when it becomes impossible to maintain steam pressure with a properly rated load even under the most favorable conditions.

APPRENTICE INSTRUCTION.

During the past few years there has been a great boom in educational work, especially along engineering lines. In addition to established technical schools and colleges there has been a large increase in the number of night school and correspondence schools and many young men have taken advantage of them. Sometimes they have been benefited and sometimes they have not, but the result has been that a great number of young men with a smattering of engineering knowledge have been turned loose and there has been an

over production of so-called engineers. The courses and requirements in technical colleges have been made harder each year and a dean of one of our leading schools recently said that although the attendance this year was not as great as usual, he was well satisfied that this was so. The effort to make the term engineer of real value and meaning by raising the standards of these schools is to be commended, for it means a stronger position for the school and greater respect for its graduates.

We are in need of fewer engineers and more men with enough technical knowledge to enable them to perform their work more efficiently. Although night schools and correspondence schools are doing much good, their greatest drawback is that their instruction does not go hand in hand with the practical work which the student does during the day. In order that the student, as well as the firm who employs him, may get the greatest benefit, his instructor should know and be in sympathy with his daily work. Large industrial plants are realizing this and are supplementing their regular apprentice courses by lecture courses and instructional work. The University of Cincinnati is at present very successfully co-operating with the industrial concerns of that city by giving their apprentices technical instruction. In this case the students put in part of their time in the shop and part in the class room. One of the large machine tool builders of Germany maintains a trade school of its own which is so complete that it teaches languages and higher mathematics to those who show themselves adapted to further instruction. This school has proved very successful and the firm has a wide reputation for the quality and finish of its products.

Recently the railways have been giving renewed attention to educational work, realizing that the efficiency of the road is dependent upon the efficiency and loyalty of each employee. The boys and younger men are of course the easiest to work with. This winter the Chicago Great Western Railroad is giving a course of lectures covering all departments of railway work, and the general manager recently sent out a circular letter to all station agents requesting them to forward the names of young men along the line who would be interested in entering railway work, in order that they might be induced to attend the lectures. Many a youth has to quit school at an early age and go to work. The railway which can offer him a certain amount of technical instruction will receive the benefit of better and more intelligent service. The mechanical department can with profit either give technical instruction or arrange to co-operate with a school of known reputation for this purpose.

THIRD MAN FOR LOCOMOTIVE OPERATION.

One of the advantages of the Mallet locomotive is the fact that it can approximately double the tonnage hauled by a single freight locomotive without doubling the crew as would be the case in double heading. In coal burning districts, however, it is almost impossible for a single fireman to handle the coal which a Mallet will burn. It has been suggested that an inexpensive solution is to break in student firemen by sending them out with veterans in this class of service, the student can alternate with the regular fireman and otherwise assist him in the heavy duties. If the number of Mallets is proportionately small, it will be found possible to fill engine crews in this manner without keeping the green man too long a helper. The students, of course, would not be paid firemen's wages.

CONCERNING THE RAILWAY SITUATION.

By Chas. H. Reid, V. P., Zug Iron & Steel Co.

In the daily grind of the press detailing the methods and probing of congressional committees into various types of so-called trusts, and by the Interstate Commerce Commission in the operation and regulation of railways, the primary object appears to be, not to try to discover how to correct faults that are the outgrowth of a bad system, but if possible to fasten the stigma of crime upon some individual or concern prominent in the business life of the country, for deliberate or technical—very often the latter—violation of federal laws and to magnify it into a heinous offense worthy of condign punishment.

The causes of the sudden slump in fall of 1907, primarily local, and largely the natural sequence of high pressure business overdone, and later accentuated by a more radical application of the Sherman Law to railway affairs, have now grown to the proportions of national issues. The elections of some months ago changed the political complexion of congress very materially, and the ambition of some new members to insert probes into every type of industrial combination has accentuated the uncertainty and added to the distrust that has so long paralyzed industrial activity.

Ostensibly this zeal for law observance is in the interest of the poor consumer, but the fervor of patriotism is too thin to prevent the politics and personal prejudice from showing, and the public is fed ad nauseam upon "discoveries" that have been common knowledge to ordinary readers and that have been openly accessible at any time to fair-minded, unbiased investigation. Show us the committee of the several that have lately been junketing about the country, jabbing at little blisters in corporate bodies, that have been sufficiently unprejudiced to investigate to a finality, the degree of injury resulting to the ordinary citizens from these technical violations, and whether the consumer is not being penalized in a ten-fold ratio by these same committees in the continued disturbance of public confidence, and an unnatural industrial depression that has lasted nearly four years, and during a period too when the general prosperity of the country has never been surpassed.

The Sherman Law was passed over twenty years ago, and the last sixteen years of its existence have been continuously under Republican administration. During this latter period there has been more open violation and technical evasion of the law, in over-capitalization and manipulation of railway properties by promoters and financial syndicates; more development of the "trust" idea, with all its real and fancied possibilities for evil, than was ever even dreamed of before. The attitude of these administrations not only discredited the law, through lack of earnest effort to vindicate it, but by their inaction fostered the idea that it would not stand the test. The best legal talent all over the country was employed during this period, as never before in our history, in teaching corporations and financial syndicates how to

evade the spirit and intention of the law through possible or fancied defects in its letter, in the formation of combinations that are now bitterly arraigned as law breakers.

It was not until the second term of Roosevelt's presidency that sincere effort was made to test the strength of the Sherman Law, and since its vindication by high court decisions, its application to some interests vital to the country's prosperity has been so uncompromising and so utterly inconsistent with the attitude of administrations for ten years previous, that the consumer has suffered vastly more in the four years of law enforcement since 1907 than could possibly have resulted to him under the old regime in double the period. Take the railways that for the past four years have been made special objects of uncompromising federal regulation under this 20-year-old law. They have not only been subjected to rigid interpretation of present law, but have been constantly menaced with other drastic legislation which has continued them in a state of deplorable uncertainty as to what they should or should not do until this new legislation is duly defined and its limitations fixed. There is no other single factor, or several combined in our national life, whose depression or normal operation affects the daily comfort and well-being of so many people in the ordinary walks of life as does that of the railway. In normal operation of the latter it is claimed a million and a half of employes receive a constant wage.

It is a very reasonable presumption that five or six persons are directly or indirectly dependent in a large degree upon each of these million and a half of railroad employes, either as relatives, or the tradesmen who supply their daily living needs. Add to these the very large number employed in the shops and factories that manufacture various types and parts of railway equipment who have been working only from 25 per cent to 50 per cent of the normal activity, and you have approximately one-tenth of the population of the whole country that has been very materially affected by the tedious and labored decisions of the Interstate Commerce Commission, or the political demagogery that has obtained in congress and committees, the members of which are constantly seeking for new marks for the probe, or individuals to indict.

The railways of the country, with their 230,000 miles of track, take for their upkeep, extension and renewal of equipment when in normal operation, nearly one-third the output of the iron and steel mills of the country, or approximately 9,000,000 tons of their products per annum. In any one of the past four years, because of the uncertainty referred to herein, and of the almost constant political agitation of some sort, the railroads have drawn scarcely one-third of the above tonnage, and because of general distrust and unsteady prices, other industrial enterprises than iron and steel have suffered unnatural depression. The natural sequence has been, suspension of some mills, half operation of nearly all others, and non-profitable operation to a large number during most of this period. What particular type of consumer has been benefited by this costly demonstration? And what about the horde of consumers who have worked but half time because of the manner of demonstration, and of the politics that throttle the best intentions of the law. Any national law the purpose of which is to be corrective and constructive, certainly contemplates the greatest good to the greatest number, and is neither local or sectional. Whatever latitude or discretion is permitted in its interpretation and enforcement, should as certainly be measured with reference to the general good, and be sufficiently elastic to include the possible remote sufferer as well as the immediate beneficiary affected by a ruling or decision. No thinking person sincerely decries the Sherman Law or denies its power to regenerate bad systems and by co-operation make them good. And why not co-operation? The railroads of the country have grown into bad habits both in financing and extravagant operation, because the enforcement of this law was grossly neglected for nearly two decades.

If the Interstate Commerce Court and Committee have the broad discretionary power their decisions warrant the people in believing, why can they not and why should they not, co-operate with railroads, to some extent at least, to restore industrial activity by favorable consideration of reasonable advance? Why not consider the millions dependent upon railroads for direct and indirect support, as well as try to promote the profit of shippers, by spending months in measuring the exact equities between different localities, while the wheels of industry stand awaiting the verdict relating to a single class of commodity? Early in 1910, encouraged by popular sentiment, and believing the promised era of prosperity was about to set in, the labor organizations of railway employes throughout the country began to formulate demands for higher wages and easier working conditions.

Many of the leading railway lines recognizing the trend and force of this sentiment, anticipated these demands and their attendant strike fever, by voluntary advances and concessions, and then announced an advance in freight rates to recoup this extra drain on their income. This advance was denied entirely by the Interstate Commerce Commission. Had the railways been granted half the increase asked for at that time, and had the commission at the same time required of them the creation of surplus funds from their income, for the gradual reduction of their inflated capital, and the betterment of their investment, and had measured them to periodic audits in which results satisfactory to the commission must be shown, there is little doubt but that the industrial situation of the country would be vastly better than it is today, and the little added burden to shippers through such increase would not have been a tithe of that imposed upon the whole manufacturing area of the country by the uncertainty and depression that is almost if not quite as pronounced today as two years ago. Under such concession and requirement the railways would have been steered out of the sea of uncertainty, would have known what they could and must do. A large part of the increase granted would have gone into circulation for material for the much needed betterment of their physical condition, put the mills into fuller and nearer normal operation; employed thousands more men on full instead of half time, and because of the required creation of stock redemption funds, the same economic practice and efficiency methods that are now being inaugurated on many railway systems, would have been just as necessary and a natural sequence. This latter, too, would

accomplish gradually the getting back to physical and intrinsic value, without the bogey of special federal legislation. The railway problem is a big and vital one, and should be handled with less public rancor and without prejudice. An aggregate proposition affecting nearly ten millions people and many billions of investment, requires very consistent treatment, and faults of fifteen years' growth cannot be purged in as many months, without tremendous and paralyzing shock. Demand better standards, and sincerely cooperate in securing them. Evolution is better than revolution. The railways are the pulse of the country, the arterial system of our commercial and industrial life, and at this critical period of their existence need a good health-restoring tonic, instead of phlebotomy and continued diet of political wind pudding.

AN INTERSTATE LABOR COMMISSION.

Editor Railway Master Mechanic: I have read with a good deal of interest your editorial (page 445, October issue) on the subject of regulation of labor unions of transportation employes. I think the suggestions worthy of very serious consideration. I believe the public, having secured regulation of transportation charges, are now more interested in securing proper and regular service, and certainly the disruption of railway service is a more serious matter to all of the public than the question of charges for service, because the stoppage of railway traffic affects directly, or indirectly, all of the public while the charges for traffic really affect only a very few people.

(Signed) H. U. Mudge,
Pres., C., R. I. & P. Ry.

Editor Railway Master Mechanic: Noting an article in the October number of the Railway Master Mechanic entitled "An Interstate Labor Commission," I would like to offer a few criticisms.

Passing by the writer's comments on the powers of the Interstate Commerce Commission, etc., we will take up for consideration the statement that "the railway world, and indeed the whole industrial world, is now confronted with the organization of labor trusts which are not responsible to the law, to its employers or to the public, while they hold in their hands the power to disrupt all of the structures of the public."

The statement that the labor organizations are not responsible to the law seems a rather broad assertion. I would respectfully ask in what way are they not responsible to the law. The labor organizations have for sale their labor. They may demand unreasonable prices or reasonable prices as the case may be, but the corporations are by no law of the land bound to accept their propositions. Each individual member is responsible to the law morally, socially and otherwise, the same as though he were not a member of a labor organization, just as each individual member of a corporation is responsible to the law. The whole question then, regarding the organization of labor, is making better the conditions and environments of the laborer, and the prime factor in this move is to get better wages. In other words selling his labor at the highest possible figure, and it depends entirely on the well understood and recognized principle of supply and demand—which principle is employed by all merchants and manufacturers. It might be argued that the labor organizations set their price or demands on the product or labor of the whole membership, and that the employer is compelled to accept the proposition as a whole without discrimination. As a counter argument to this it could reasonably be asked, would a merchant or manufacturer dismember his products or machine and sell a portion of it at the same proportionate price as he would sell the whole, running the risk of dispensing with the remainder at its proportionate price?

The writer states that "A railway cannot increase its own wages (rates) except with the freely obtained consent of its employers (the public)."

The question then arises, who are the public? Statistics I believe will show that about one-fifteenth of our population are railway employees, or are engaged in conducting transportation. One could go farther and say that anyone transporting by steam boat, wagon or other means is in the same vocation. My object is here to show that the railway employees are a considerable portion of the so-called public, and all those who are conducting transportation could not be seriously affected by raising freight rates unless the rates were raised so high that it no longer was profitable for the shipper to ship, thereby throwing the transporting companies out of employment. I believe the railway managers are far seeing enough to prevent a condition of this kind. It has been my experience that the railway companies are trying to encourage shipments and build up the country. It would seem illogical for them to do anything else.

Referring again to the restricting of railway rates, I believe that a railway company has the same moral right to hold its rates up ot the point where a fair percentage can be made on its investments as any merchant or manufacturer, and a railway company stands in the same danger of competition as does any one engaged in any other line of business. To boil the whole thing down it would appear that the so-called public have clamored for a reduction of rates, until the railway companies can no longer keep up their maintenance of way or rolling stock to that standard which they previously did, and the so-called public now comes along and insinuates that they should cut down the wages of their employees.

Would it not be well to have a commission appointed to enter the factories of this country, for the purpose of regulating the prices of their products? For the merchant and manufacturer are as much public servants as are railway companies. It is of more consequence to eat than to ride. As a primary proposition, most any locality will sustain its population without railways, but not without that which the merchant controls. It would not take a far seeing business man to arrive at the conclusion that the cheaper he could get his wares transported from New York to the Antipodes, the more profit he could make on them.

(Signed) H. L. Bartels, Parkersburg, W. Va.

A fireless steam locomotive is in service at the plant of the National Cash Register Co., which, although it looks very much like an ordinary industrial locomotive, consists essentially of a large tank and two low pressure cylinders. The tank is filled half full of water and steam is injected from the boiler plant at 150 pounds pressure. A reducing valve brings the pressure down to 60 pounds and it is claimed that the engine will run two or three hours at one charging. Here is an excellent opportunity for some one to urge this as a solution of the smoke problem in large cities.—Daily papers please copy.

In a recent magazine article on health the writer said that some people need automatic stokers more than many locomotives. From the way we have seen some people throw fuel into their "fire boxes" it is not surprising that the fire is nearly killed and their steam gets low.

At a meeting of the Executive Committee of the Master Boiler Maker's Association, held at the Fort Pitt Hotel in Pittsburg, Saturday, October 28th, it was unanimously decided to hold the Sixth Annual Convention of this Association in Pittsburg, May 14th to 17th, inclusive, 1912, headquarters being at the Fort Pitt Hotel. George N. Riley, of the National Tube Company, was made chairman of the general committee of arrangements and Roger T. Flannery, of the Flannery Bolt Company, was appointed secretary of this committee.

Sweetwater Terminal, A. T. & S. F. Ry.

The Atchison, Topeka & Santa Fe Ry. has just completed a roundhouse and terminal buildings at Sweetwater, Texas. This is in the central part of the state on the Texas-Coleman cutoff, a line which greatly shortens the Santa Fe's route from Galveston to the Pacific. The improvements include an 18-stall roundhouse, blacksmith shop, machine shop, woodworking shop, powerhouse, storehouse, lavatory building, coal chute, sandhouse, cinder pit and station. With the exception of the station the relative position of these buildings is shown in the drawing.

Sweetwater, Texas, Terminal, A., T. & S. F. Ry.

The roundhouse stalls are 92 ft. deep and three of them are equipped with drop pits containing the standard Santa Fe hydraulic jacks. A 44-ft. traveling crane with a capacity of 7½ tons has also been installed. At the permanent end of the roundhouse space has been left for a 133x173-ft. Mallet engine house and enough clearance has also been left so that the outer circle may be extended if this should be thought the most desirable way of taking care of the Mallets. The turntable is an 85-ft. span and is equipped with a Nichols turntable tractor, manufactured by Geo. P. Nichols & Bro., of Chicago. The tractor operates on a 440-volt, 60-cycle, 3-phase current.

North of the roundhouse is located the powerhouse, and just back of the roundhouse are located the lavatory, blacksmith shop, machine shop, storehouse and woodworking shop, as shown in the photographic illustration. The powerhouse is 60x75-ft. and is divided into an engine room and boiler room by a wall through the center. In the boiler room are three 78-in. by 18-ft. Murray return tubular boilers of 175 horsepower each, and working at 125 lbs. pressure. Also two Knowles 7½x4½x10-in. feed pumps, two Knowles 14x8½x12-in. duplex pumps for general use, and a Colles 1,000-horsepower feed water heater. The boilers have metal stacks 40 ins. in diameter and 70 ft. high. The power units in the engine room consist of two Curtis turbines direct connected to 480-volt, 60-cycle, 3-phase General Electric generators running at 3,600 R. P. M. The turbines are non-condensing. Compressed air is supplied by a cross compound, two-stage air compressor. Most of the fittings in the powerhouse are Crane fittings and are extra heavy.

The lavatory building is well fitted up with toilet facilities, is large and roomy and has space to spare for other purposes. The blacksmith shop is 36x46 ft. and contains three forges, a 1,100-lb. Niles-Bement-Pond hammer and a Niles flange clamp. There is also room for additional forges. A post crane of 14-ft. radius serves the center of the building.

The machine shop is 60x100 ft. One side of the shop is fitted up for bench work, with an office and tool room at one

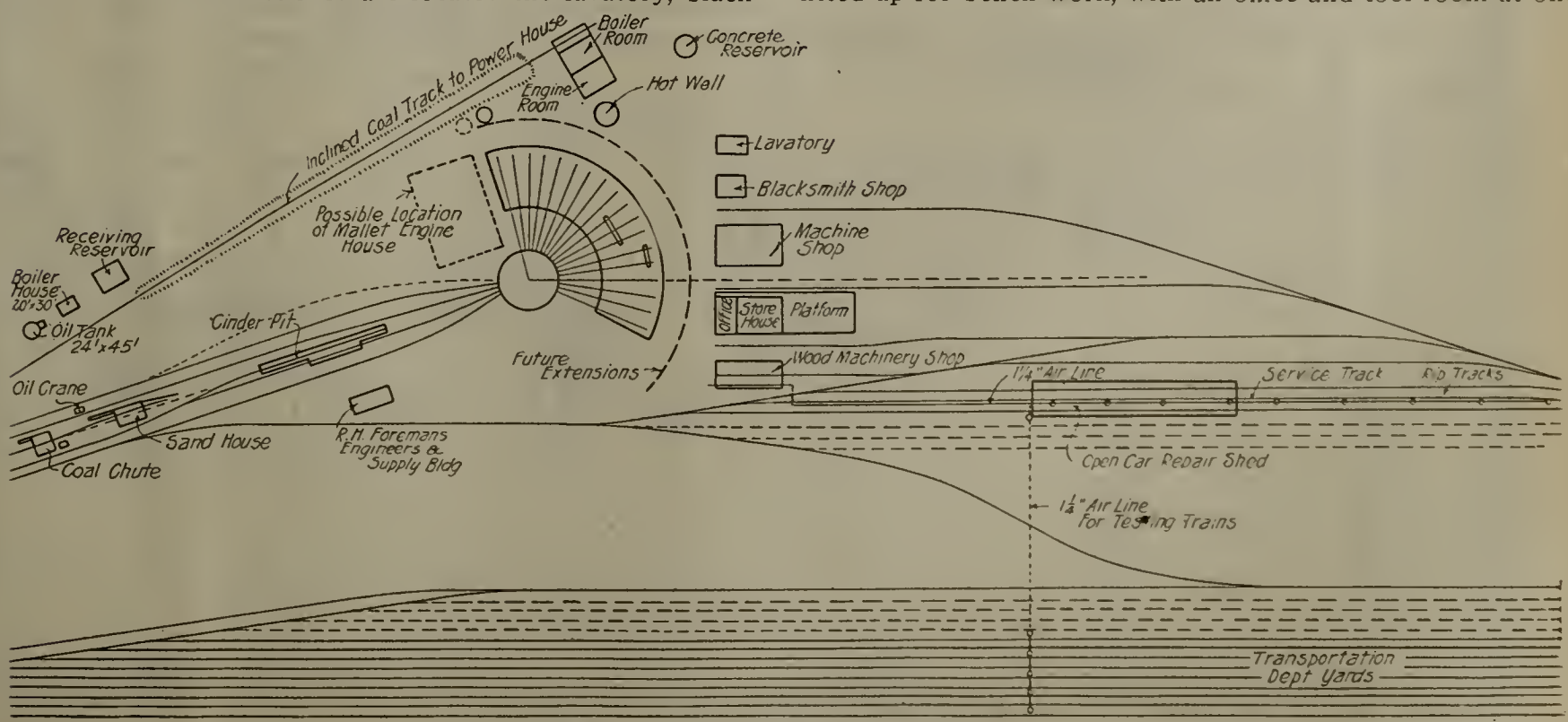

General Layout of Sweetwater Terminal.

Buildings Under Construction, Sweetwater Terminal.

corner. The larger portion of the building is occupied by the machine tools, power for which is supplied by two 25 H. P. motors belted to a single line shaft. Three radial bracket air cranes are used for serving the heavier machines. The storehouse is 60x122 ft., and has a platform at the rear 60x 125 ft. The wood shop building is 40x100 and is equipped with four machines, as shown in the table below. A service track extends through the building.

Between the powerhouse and lavatory is a concrete cistern 50 ft. in diameter and 15 ft. deep, having a capacity of over 191,000 gallons. It is supplied through an 8-in. pipe which connects it to the lake. The suction of the high pressure pump in the powerhouse is connected to the reservoir through an 8-in. pipe and the discharge is connected to a fire line of 8-in. pipe, with reductions to 6 ins. In this line is a 24x60-in. steel tank and the line extends to the various buildings with hydrants where necessary. The suction of a duplex pump is connected to a hot well just outside the powerhouse and the discharge supplies hot water for washing and filling locomotives. Air is supplied to the various buildings through a 3-in. pipe, tapering to 2½ ins. and 2 ins. Most of this line is overhead on supports. Steam is supplied through a 2½-in. line from the powerhouse. Lavatories are connected to an 8-in. sanitary sewer and a 12-in. waste water sewer, with 6 and 10-in. branches, connects the cinder pit, turntable pit, drop pits and powerhouse.

All of the buildings with the exception of the wood shop are of reinforced concrete and were constructed by means of the tower and two chutes shown in one of the illustrations. The wood shop is sided with corrugated metal. Roofs are of wood, covered with a composition roofing. The work was done by the Witherspoon-Englar Co., Monadnock Blk., Chicago, general contractors, and under the supervision of F. H. Adams, engineer of shop extension. Following is a list of the equipment and machine tools which are now being installed:

Powerhouse:

3—78-in. x 18-ft. Murray return tubular boilers.
1—1,000-H. P. Colles open-type feed water heater.
2—7½x4½x10-in. Knowles duplex boiler-feed pumps.

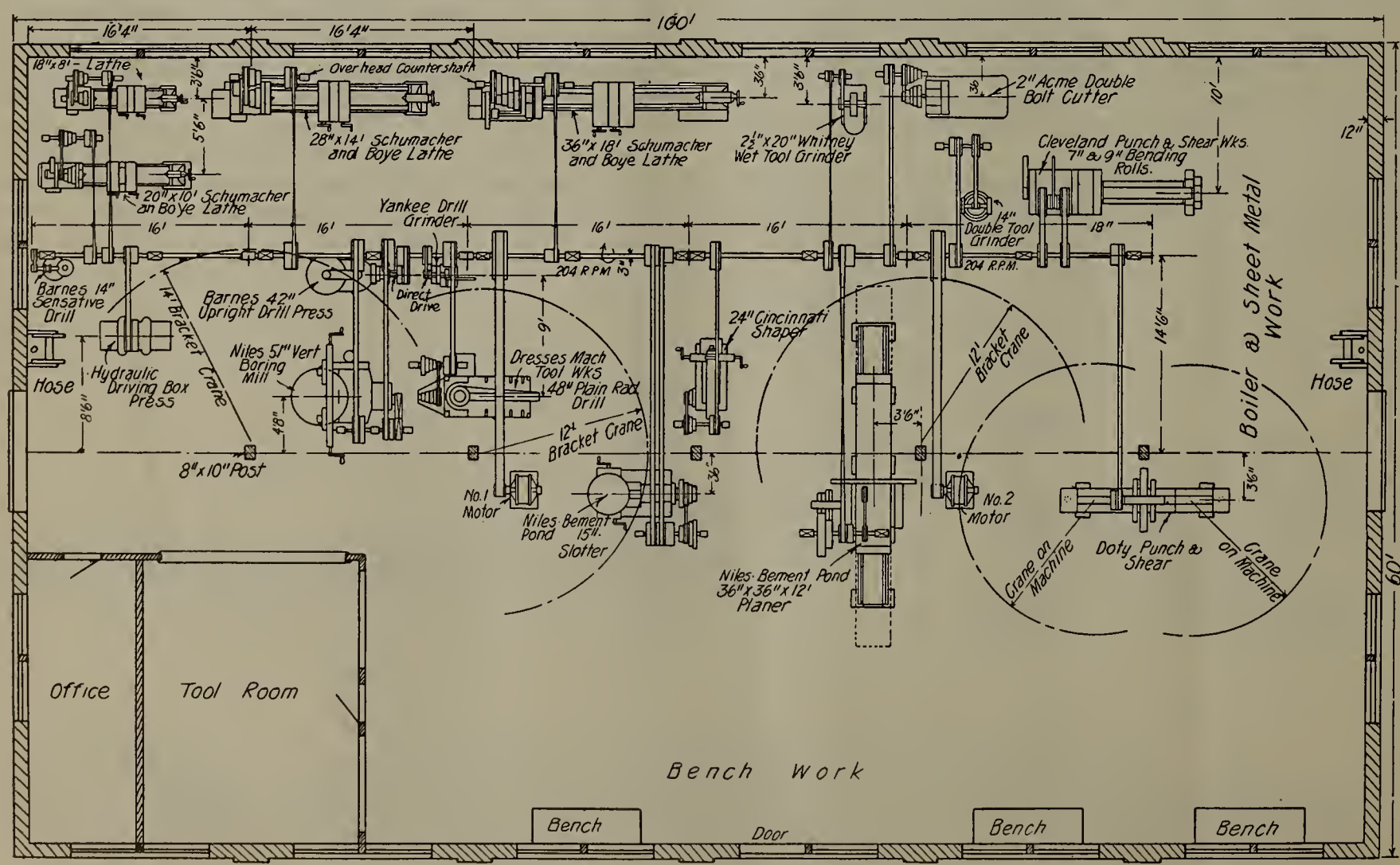

Machinery Layout, Sweetwater Terminal.

1—Motor-driven turbine pump, capacity 500 gals. against 100-ft. head.
2—125 KVA. direct-connected Curtis turbine-driven General Electric generators at 3,600 R. P. M., 480-volt, 60-cycle, 3-phase, non-condensing for 125-lb. steam pressure.
1—1,000-ft. Dunn-Gordon cross compound, two-stage air compressor.
2—14x8½x12-in. Knowles duplex pressure pumps.

Roundhouse:
1—15 H. P. Nichols motor-driven electric turntable tractor.
1—Three motor 7½-ton, 44-ft. span, traveling crane.
2—Santa Fe standard hydraulic drop pit jacks.

Blacksmith Shop:
1—1,100-lb. Niles-Bement-Pond single-frame steam hammer.
1—Hand crane to serve hammer.
1—10 H. P. electric motor.
1—Steel pressure blower, 5½-in. outlet.
1—Face plate.
2—Forges.
2—Anvils.
1—Slack tub.

Machine Shop:
1—Schumacher & Boye engine lathe, 36-in. x 18-ft. bed, with face plate jaws.
1—Schumacher & Boye engine lathe, 28-in. x 14-ft. bed, with 26-in. chuck.
1—Schumacher & Boye engine lathe, 20-in. x 10-ft. bed, with 18-in. chuck and taper attachment.
1—Schumacher & Boye engine lathe, 18-in. x 8-ft. bed, with 16-in. chuck.
1—51-in. Niles-Bement-Pond vertical boring and turning mill.
1—Machine Tool Works 4-ft. heavy pattern radial drill press.
1—42-in. Barnes upright drill press.
1—Barnes 14-in. upright sensitive drill press.
1—Niles-Bement-Pond planer 36x36-in. x 12-ft. stroke.
1—Portable locomotive cylinder boring bar.
1—Acme 2-in. double-head bolt cutter with 12 thread lead screws.
1—Yankee "P-O" twist drill grinder.
1—Whitney 2½x20-in. wet emery grinder.
1—Santa Fe build 2x14-in. double dry emery grinder.
1—60-ton Santa Fe upright belt-driven driving box press.
1—Cincinnati 24-in. pillar shaper.
1—Niles-Bement-Pond 15-in. slotter.
1—Doty double-end punch and shear, 36-in. throat, ⅝-in. plate.
1—8-ft. boiler plate flanging clamp.
1—Cleveland Punch & Shear 6-ft. boiler plate bending rolls for 7/16-in. plate.
2—25-H. P. General Electric motors to drive above machinery.

Wood Machinery Shop:
1—Greenlee rip saw table for 24-in. saw.
1—Greenlee automatic cut-off saw, 24-in. saw.
1—Greenlee 2-in. vertical hollow chisel mortiser with two boring attachments.
1—Bental & Margedant 42-in. band saw.
1—Berlin 8x15 four-side sizer and moulder.
1—35-H. P. General Electric motor to drive above.

The Chicago Great Western is giving a course of lectures this winter at Oelwein, Ia., for the purpose of educating and inducing young men to enter the service of the "Corn Belt Route." There are about forty lectures by various officials, covering all phases of railroading and they should be of great benefit. If a few more railroads go into the educational business, they will give our schools and colleges some strong competition.

"AN IMAGINARY DAY IN THE OFFICE OF THE SECRETARY OF THE NEW DEPARTMENT OF TRANSPORTATION."

By Fairfax Harrison.

Fairfax Harrison, president of the Chicago, Indianapolis & Louisville Ry., on August 1st delivered an address before the Conference on Southern Problems at the University of the South, Sewanee, Tennessee; his subject was "Government Ownership of the Railways as Unnecessary as It is Undesirable."

That he might illustrate in a graphic way some of the probable results of government ownership, Mr. Harrison, after a very complete discussion of the subject, closed his address as follows:

"Let us then imagine a day in the Washington office of the Secretary of the new Department of Transportation.

"The Secretary has just concluded his first six months of government management of the railways of the United States, but he is not altogether happy in his great office. The statement of the results of the six months' operation which lies before him is only part of his troubles, but that in itself should be enough. In pursuance of the pledge of his party platform on which a year ago he had triumphantly stumped the country, he began his administration by reducing rates Although business has been fairly good, revenues have shown decreases from week to week from the very start, owing to the reduced rates, and somehow there has not been accomplished that economy which he had proclaimed would come from increasing the wages of employees to the point where their individual responsibility for results would be awakened and high efficiency of labor ensue. This theory had sounded particularly well from the political platform and undoubtedly won many votes, but, while the Secretary had done his part and had increased wages in the amount fixed by a board of arbitration consisting of the heads of the various labor organizations, somehow the resulting efficiency was not forthcoming and the operating income was steadily less. The Secretary sometimes suspected that his managing organization was responsible for this, because on his coming into office he had reduced the salaries of all the general managers, in response to congressional criticism of the payment of higher salaries to railway officers than were paid to cabinet officers, and as a result most of his competent operating officers had resigned—'to engage in other business,' the circulars read. The Secretary had heard that this had happened in Switzerland also and had never been quite comfortable in replacing the general managers, who had been born and bred on the road, by lawyers with political pull who were recommended by their senators.

"So the Secretary had determined on a reaction and had made several advances in specific commodity rates. This morning he was greeted from the top of his mail by a clipping from a Chicago newspaper denouncing this action, vocally accusing him of graft and demanding his immediate resignation. This was accompanied by a pleasant and clever cartoon depicting the maxim of Philip of Macedon that any fortress can be taken which can be reached by an ass laden with gold, and in this case the fortress was labeled with the Secretary's name and its turrets aptly resembled the Secretary's peculiar ears.

"Farther down in the mail was a letter from the Board of Trade of Liverpool demanding that export bills of lading issued by station agents shall be personally endorsed by the President of the United States: a protest from a G. A. R. post against the Secretary's new system of scientific divisional organization because it was modeled on that of the Confederate army: a resolution of Congress calling for information as to the movement of switch engine No. 999 from roundhouse to shop without a 'full crew,' and the all steel caboose equipped with drinking water as required by the act

of such a date: a protest by the Federal waterways commission against reducing rail rates in competition with the water rates obtaining on the rivers recently canalized by the government,* a letter from the Department of the Interior demanding the concessions from published freight tariffs, on supplies shipped to Indian agents, which that Department was wont to demand of the railroads before the government took them over; and finally a communication from the Post Office Department advising that as the mail was running normally heavy the usual quadrennial weighing to determine mail pay would be postponed until the Department should determine that it was more to the interest of the Department to have it done.

"Having read these pleasant and encouraging missives, the Secretary turned to receive his assembled visitors.

"First, there was a delegation from a labor union, accompanied by a United States Senator, to demand the removal of the only efficient general manager left in the service (who for very love of the work had remained despite reduced pay), because he had ventured to close his shops when his appropriation was exhausted. Next was an influential member of Congress from one of the slum districts in New York, who had a reputation as an authority on political economy and represented the ultimate consumer. He wanted to know whether the generally expected deficit in the income account of the government operated railways was to be met out of general funds of the government and so fall upon the taxpayer at large; he argued, and the Secretary could not but recognize the force of it, that this was but another form of special privilege similar to the protection by customs tariff which had weighed upon the country for so many years and only recently had been removed; the reduction of rates for the benefit of the shipper with the effect of creating a deficit to be made up by the taxpayer was, he urged, worse tyranny than Schedule K itself.

"The Secretary then turned with a heavy heart to delegations from the Chambers of Commerce of Boston, Seattle and Atlanta, who came to enquire whether the Secretary did in fact contemplate, as had been announced in the press, the introduction of the zone system of rates which is in force in Germany, for if so they all wanted to protest (on different specifications it is true) against wiping out the existing systems of rates, based, it was admitted, on apparent discrimination between localities, but they urged that they had done business on those rates for a generation and surely the Secretary did not wish to bring on an already nascent panic by throwing all established business into chaos; the Secretary was too practical a patriot to do that.

"The Secretary sighed, and, with pure intellectual relief, greeted a group of new and ambitious congressmen who wanted information on which to formulate the annual 'pork barrel' bill for new construction of unprofitable branch lines to all county seats. At least the Secretary could sympathize with that: it was practical politics.

"Last came the bureaucratic purchasing agent, and with a complacent smile, reported that he had requisitions for one dozen fountain pens and can save three cents apiece on their cost if authorized to purchase five years' supply. This was the last straw, the Secretary exploded, rehearsed the experience of Moses with the green spectacles in the Vicar of Wakefield, and went home to lunch.

"The proposal that the government shall acquire and operate the railways is essentially an economic, a business question, but it must be decided in political debate. One is nevertheless encouraged to believe that the American people will, when called upon to do so, decide it right, because the most important and the most difficult economic question of this generation, that of the gold and silver standards, was determined correctly by popular vote in a fierce political campaign. That was a supreme evidence of one of the qualities of our civilization which a stranger cannot always understand. We live in an age when everything 'progressive' seems to be considered sacrosanct, when the American people seem to want to change institutions for the mere sake of change, yet in the last analysis sober judgment usually prevails. It is confidently expected that no such violent economic revolution as the taking over of the operation of the railways by the federal government will ever get beyond the realm of debate; but perhaps even to debate it brings us within the shrewd comment of an intelligent observer in a recent English review:

"'A passion for reform has seized the American people (says Mr. A. Maurice Low), and not to take part in the work of reform burdens their conscience. Not to hear the still small voice of reform is to be guilty of mortal civic sin. * * *

"'The historian of the next century will wonder what it was all about. The historian of the present century is equally puzzled to find the logical explanation. The historian that is to come will learnedly prove that the American people in the beginning of the twentieth century were suffering under an intolerable burden, that, sunk in sloth, they had permitted themselves to be robbed of their rights and at last rose in rebellion and were fired with a mission of reform. The perspective of a hundred years may enable a more correct view to be obtained of social conditions than we can get today, living in the midst of them, but the *raison d'etre* for this hysterical wave of reform that is engulfing a sober and intelligent people defies discovery. The Americans were never so well off as they are today, their future never appeared so bright, and yet they are discontented, frightened of themselves, fearful of what fate has in store for them.'"

MECHANICAL CONVENTIONS 1912.

The executive committees of the Railway Supply Manufacturers' Association in convention with the executive committees of the American Railway Master Mechanics' and the Master Car Builders' Associations met at the Belmont Hotel, New York City, October 24th. It was decided to hold the next mechanical convention at Atlantic City, N. J. The Master Car Builders' will meet first beginning June 12, and the Master Mechanics will meet on the following Monday, June 17, each continuing three days. The supply exhibit will be on the Million Dollar pier as usual.

GOING SOME.

The following was received from Mr. C. L. Acker, master mechanic of the Toledo Terminal R. R.:

On Tuesday A. M. October 17, 1911, we shopped Baldwin engine No. 5, one of our regular belt engines used in crosstown switching service, for a set of 6 new tires. At 6:30 A. M. as soon as reasonably could be expected after the whistle was sounded, work was begun, and the engine jacked up to clear the rails, ready for action. All the old tires were removed and a complete set of new Midvale tires applied. All rods, guides, crossheads, brakes, air cylinders, sand pipe, etc., were re-erected; during this time the boiler was being caulked and other repairs made to the tank. The engine was jacked down on to the rails, coupled to the tank, the boiler filled with water, and fired up to a steam pressure of 100 lbs., moved over the turn table O. K. for service in 7 hrs. and 30 minutes. The total cost for labor was $17.83. The burner which we used for this work is one that was gotten up by our shop forces as an experiment and proved to do good work.

During the same time our No. 1 McMyler coaling crane was placed in the shops, blown off, cooled down, and 10 lb. 2½-in. flues removed, scale removed from the sheet, and 10 safe ended flues applied. All work was re-erected and the boiler fired up for service in 6 hours and 30 minutes.

Electric Locomotives for Hoosac Tunnel, B. & M. R. R.

The Boston & Maine R. R. has in service since the latter part of May, five Westinghouse electric locomotives for freight and passenger service at the newly electrified Hoosac Tunnel. One of these locomotives hauls each train and its steam locomotive with banked fire through the tunnel. This practically eliminates the obnoxious steam, smoke and gases incidental to steam operation. These locomotives have four geared motors, twelve wheels and are designed for operation on 11,000 volts alternating current. Two are used for heavy freight service and the remaining three for combination passenger and light freight service.

The electrified zone extends from Hoosac Tunnel Station, Mass., to North Adams, Mass., a distance of 7.92 miles, of which 4.75 miles are within the tunnel. The central zone of the tunnel has an almost level track 1,200 feet in length, with an ascending 0.5 per cent grade up to this level track from both the east and west portals.

The passenger locomotives were designed to handle trains having a maximum weight of 730 tons, inclusive of steam and electric locomotives, and to maintain a schedule time of 14 minutes between East Portal, Mass., and North Adams, Mass. The locomotives for freight service were built to handle heavy freight trains having a maximum weight of 2,000 tons, including both steam and electric locomotives, and are required to accelerate this tonnage on the 0.5 per cent grade in the tunnel.

The under running gear consists of two massive trucks. They are known as 2-4-0 articulated trucks and have 63 in. wheels. Each truck has two driving axles constituting a rigid wheel base 7 ft.-0 in., and a pilot axle arranged to swing radially on the well known Rushton truck principle. The truck side frames follow the general design of the cast steel frames for steam locomotives, except that they are outside of the wheels. These frames are joined at each end by a cast steel box section girder of sufficient strength to care for the stresses involved in bumping in freight service. The bumper girder at each end of the locomotive is equipped with an M. C. B. coupler mounted with a Westinghouse friction draft gear.

Train Hauled by Electric Locomotive, Emerging from Hoosac Tunnel.

The adjacent bumper girders at the mid length of the locomotives are joined by a draw bar with a pin connection at each end. The eye in this bar is elongated at one end and the length of the bar is so arranged that it is impossible for the bar to be subjected to compression under severe bumping conditions. The three wheels on each side of each truck are equalized together. The longitudinal stability of the trucks is provided by the method of mounting the cab. The cab is supported by eight spring-loaded friction plates, two

Running Gear and Motors of B. & M. Electric Locomotive.

Single-Phase Combination Freight and Passenger Locomotive, B. & M. R. R.

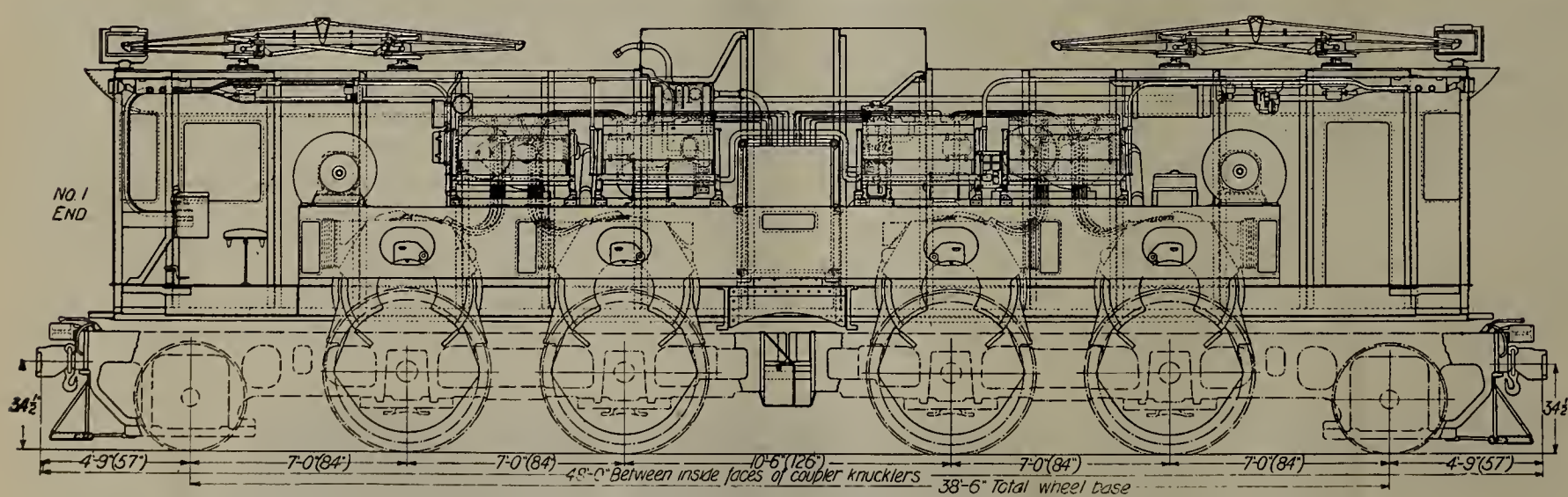

Longitudinal Section of Boston & Maine Locomotive.

plates resting on each end of each truck. This relieves the truck center pins of all the weight. This method of supporting the cab interposes two sets of springs in series between the rail and the cab and gives an exceptionally easy riding cab. To relieve the cab from possible pulling and bumping strains, the center pin of one truck is arranged with longitudinal clearance. This truck can not only rotate but can also move longitudinally relative to the cab.

In the interior of the cab a long raised deck is built along the center line which covers the motors and serves as a stand upon which the control apparatus is erected. The central arrangement of the equipment, with the numerous side windows, affords excellent light and ample room for inspection and overhauling.

Each motor is bolted rigidly to cast steel cross ties, and the weight of the motor is thus carried on the main semi-elliptic springs. The detail of this mounting is such that the motor can be lifted from the truck frame by a crane, after the cab has been removed, or the motor can be dropped into an overhauling pit when the trucks are in position under the cab. This method of mounting gives the highest center of gravity possible with a motor connected to the axle by single reduction gearing. It is particularly advantageous for locomotives that operate over tracks which are occasionally submerged.

Each end of the motor armature shaft is fitted with a solid pinion, which meshes with a gear having a rim that is flexibly connected to the center. The gear centers are mounted

on opposite ends of a hollow axle or quill which surrounds the wheel axle with a 1½-in. radial clearance between the inner and outer axles. The gear center is equipped with six arms arranged alternately with the wheel spokes. The end of each arm is bolted to one end of a helical spring, and the other end is bolted to the wheel spoke. This spring is of sufficient flexibility to allow each wheel complete individual freedom in negotiating track inequalities.

The total weight of each locomotive is 260,000 pounds, of which about 48,000 pounds is supported on each driving axle and about 34,000 pounds on each idle axle. The gear ratio for the three freight locomotives is 22:91 and for the two combination freight and passenger locomotives is 34:79. Each locomotive is equipped with four Westinghouse 315 h.p. air cooled, No. 403-A motors and with Westinghouse non-automatic unit switch control. The freight locomotives have a continuous tractive effort of 21,000 pounds at 21 m. p. h. and the passenger locomotives have a continuous tractive effort of 12,000 pounds at 37.5 m. p. h.

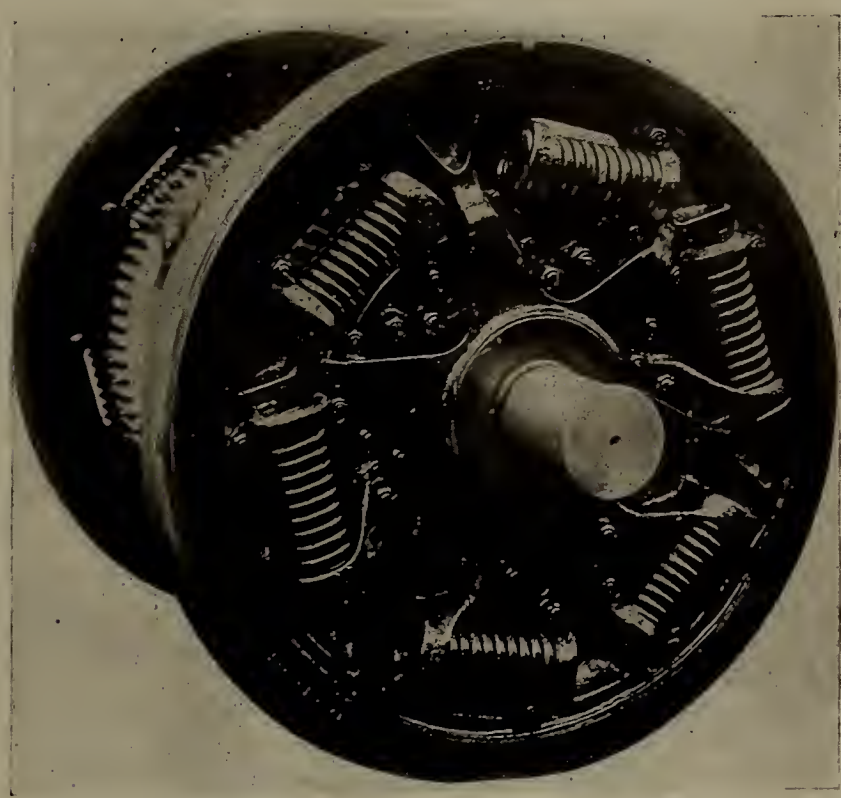

Pair of Drivers, B. & M. Locomotive.

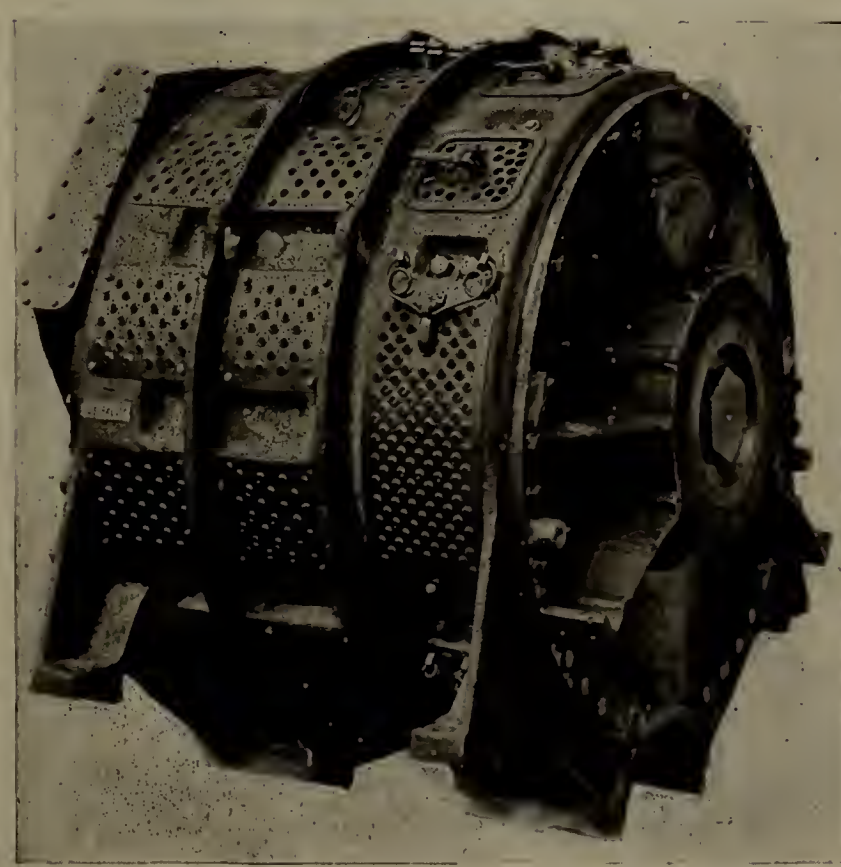

Single-Phase Motor, Showing Pinion on Commutator End, B. & M. Locomotive.

REMINISCENCES OF A MASTER CAR BUILDER.—IV.

In traveling over the country today a passenger can hardly realize the wonderful improvements that have been made in the passenger equipment in the past forty to fifty years, both for the safety and comfort of the traveling public.

In the early days of railroading passenger cars were not much more than one-half the size of our modern coaches, the average size being about forty to forty-five feet long, eight feet wide, and the sides about six feet high inside, with a plain arched roof, the center being raised about eight or ten inches above the plates. The cars were heated by wood stoves, one in each end of the car, and lighted with candles, two on each side of the car above the windows, the candles were placed in a sort of lamp with a large glass globe and gave just about enough light to make the darkness visible. The windows were small with wide panels between them and dropped down below the belt rails similar to some of the street car windows now in use.

The cars had no provision for ventilation except to open the windows and in very cold weather when the car was filled with passengers, the windows and doors closed and the stoves red hot, the air in those cars was something awful.

One of the first subjects taken up by the Master Car Builders' Association at one of their first meetings, was the heating and ventilating of passenger cars, and in answer to one of the circulars sent out by the committee, "as to the amount of air required per minute, to keep the air in a car pure," one of the old members answered, "that depends on the class of stock carried, in some of our trains if you were to take out both ends of the car I doubt if the air at the rear end of the car would be fit to breathe."

Needless to say he referred to some of their emigrant trains, and if a person has ever been through one of our modern coaches filled with some classes of emigrants, he can imagine the condition of the air in one of the old cars under those conditions, and they did not need to be filled with emigrants to make the air almost unbearable.

One of the first improvements was the introduction of the raised or monitor roofs and some of the first attempts were curiosities; on the first car changed on the old road, a strip of roofing, about four feet wide through the center of the car

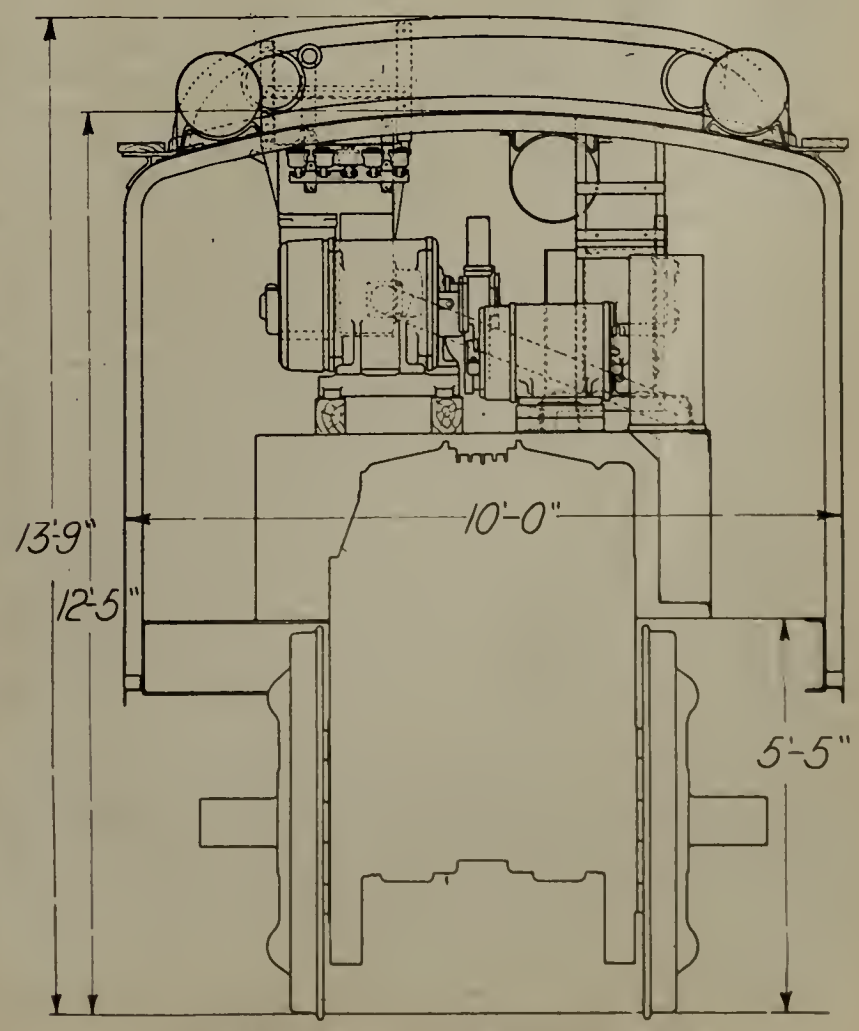

Transverse Section of Electric Locomotive.

was removed, running to within about six feet of each end of the car. On each side of this opening was placed a plank about twelve inches wide, set on edge, with openings cut out for the windows, the glass being set in the openings. The bottom edges of the planks were cut out to fit over the old rafters and securely screwed to them, the rafters were then sawed off flush with the inside face of the deck and covered with a flat moulding.

Two or three of the rafters were left in place to hold the roof together and were cased over with some of the same moulding that was used on the bottom edge of the deck. The ends of the deck inside were finished square and moulded the same as the sides. Light rafters were joined into the top edge of the plank with the ends projecting about six inches outside, forming a sort of cornice, and the roof was then boarded over, the ends of the deck outside being carried down on a bevel to the main roof over the end plates.

The roof inside was covered with a stamped cloth headlining, the edges being covered with mouldings and the remainder of the lining tacked up to the rafters with large, black or silver headed nails. Three center lamps were placed in the deck and kerosene oil was used for lighting, which was a decided improvement over the candles.

The outside of these cars below the windows was divided up into large panels running lengthwise of the car with a large oval panel at the center on each side, which was elaborately ornamented. The amount of time and labor expended in painting and ornamenting the outside of one of these old cars was about double what it is today on a modern coach. The car was first given two coats of lead and oil, then sandpapered lightly, then two coats of rough stuff, which was allowed two or three days to become thoroughly dry, this was then rubbed down with rock pumice stone and water, then two coats, sometimes three, of flat body color, then one coat of rubbing varnish which was rubbed down smooth with ground pumice stone and water when the car was ready for striping and ornamenting.

The cars were painted a chrome yellow and had a narrow stripe of red around each panel with a fine line of black parallel with the stripe. The edge of the belt rail and each edge of each moulding had a narrow black stripe. The letter board, corner and door posts and the oval panel in the center of the car were painted a different color and elaborately ornamented in gold leaf and colors.

Then the car was carefully cleaned with a sponge and water and given two coats of wearing body varnish, and when the work was properly done, the outside finish of one of these cars was equal, if not superior to any work done at the present time.

The general appearance of the car with the new deck was such an improvement over the old cars that an order was issued to change over all the cars to the new plan, so the next decks were framed with deck sills and plates, deck sash were used in the window openings and exhaust ventilators placed in several of the panels between the windows, the old rafters were removed and new ones substituted, giving more head room under the sides of the deck. Iron rafters were forged out the shape of the roof extending from one side plate to the other, thus giving an open deck the whole length of the car. The next change was when the ends of the deck were extended to the end plates of the car. On the under side of the hood openings were left covered with fine wire netting, and the end panels in the deck were hinged to open inward against a stop forming ventilators which allowed the air to enter at the front end of the car and escape through the exhaust ventilators on the sides of the deck.

The theory was good but it failed to work out satisfactorily in practice; in very cold weather a blast of air would come in at the end of the deck striking the floor about the center of the car and freezing out the passengers in that part of the car, but it was an improvement over the old cars with no ventilation.

About this time the ornamented headlinings came into use and the paint shop was fitted up with a long gallery where the cloth could be stretched, filled and finished, ready to tack up inside the car the inside of the deck being painted and ornamented in the same colors, as those on the head lining.

After this the style changed to round corners, round or oval top doors and sash and even the inside blinds had oval tops, all the mouldings on the inside of the car were worked out on the same curve and a large amount of gilt moulding was introduced wherever a place could be found for it.

The old wood seat ends were replaced with cast iron end frames, spring cushions used and the entire style of upholstering improved. All these changes were brought about in a period of ten to fifteen years and were in use for about the same length of time with very little change, but experience in the repairs and maintenance of these cars proved expensive and the next change was to a plain square finish, large double windows, plain, flat panels and mouldings which could be easily cleaned or refinished and this plan has been largely followed up to the present time.

POP VALVE METER.

F. J. Zerbee, master mechanic of the Cleveland, Cincinnati, Chicago & St. Louis Ry., has invented a device for measuring the total period a locomotive pop valve remains open on each trip. He calls his invention a "pop valve meter." It is illustrated in the accompanying sketch.

Mr. Zerbee has the following to say with reference to the device:

"I have a device attached to the pop valve, that records the hours and minutes the pop is blowing. On arrival of engine at the terminal, the record can be removed from the device, and the road foreman can show it to the engineer and fireman and say to them: 'You have consumed so many hundred pounds of coal more than was necessary to pull the train.' This coal was wasted by excessive popping. You can stop this waste by the engineers watching their injectors, and the firemen watching their fire and dampers. You must work together and stop this waste.

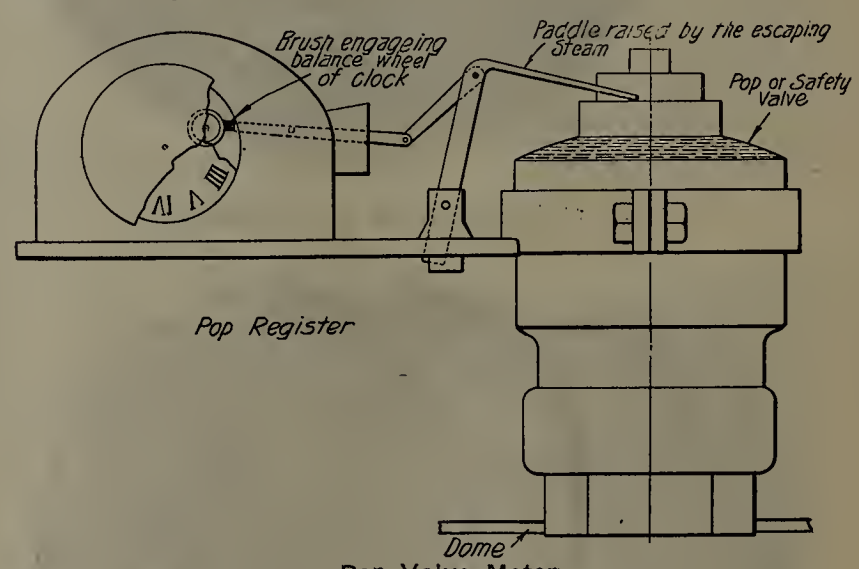

Pop Valve Meter.

"By the application of this device to our engines, we are saving on an average of from one to one and a quarter tons of coal on a 138 mile trip. Furthermore, this device checks up the round house men and hostlers. A great deal of popping is done over ash pits, and around terminals and docks.

"The water wasted through the pop valves also cuts a large figure. In a great many instances, if this water had not been wasted, extra stops for water would be avoided. A great deal of coal is wasted in starting a heavy train from a dead stop, as well as by making the stop for water.

"The firemen cannot find fault with the device, for the reason that, if they work with their brains a little more, they will not be obliged to shovel so much coal.

"How often you have engineers and firemen coming in off their run and say, 'That engine is a dandy. The pop was howling all over the road. Fine steamer.' As a general thing the pop

valves are muffled, and do not cause annoyance. In going over the road, the fireman glances up at the steam gauge, which registers 200. The engineer does the same. They are both happy. At the same time the pop is blowing away the company's coal, at the rate of 975 pounds per hour, with a 3¼ in. pop valve. They arrive at the terminal. The engineer says to the master mechanic or round house foreman, 'That fireboy is O. K. He just kept that engine howling over the road. She had her white flag out during the whole trip.'

"Now the object of this device of mine is to make popping odious instead of popular, and the men that can get over the road with the least popping are to be considered the best and most careful employes. The engine crews do not have access to the records, but it is constantly checking them up. This keeps them on the alert, and keeps them attending to business, consequently making a large saving in fuel and water. The expense of applying and maintaining this device is small. It will pay for itself in a few trips. We have a number of crews on tree steaming engines who can make the round trip without the pop valve raising off the seat, and with plenty of steam to do the work. It is only a matter of educating the men to get results."

Following is a table representative of the form used in keeping records from this device:

Bellefontaine, O., ...1911.

Eng. No. Westbound.....Eng. No. Eastbound.....
Trn. No. Westbound.....Trn. No. Eastbound.....
Engr. Westbound .....Engr. Eastbound.....
Fireman Westbound ..... Fireman Eastbound.....
Time leaving Belleft.....
Time arriving Indpls.....
Time leaving Indpls.....
Time arriving at Belleft.....
Time of pop blowing westbound.....Hrs.....Min.
Time of pop blowing eastbound.....Hrs.....Min
Coal wasted on westbound trip.....lbs.
Coal wasted on eastbound trip.....lbs.
Water wasted round trip.....Gallons.

.....
Foreman.

Note.—The safety pop valve will waste :
¼ lb. coal per second.
1 lb. coal every 4 seconds.
15 lbs. coal per minute.
900 lbs. coal per hour.

Note.—The inspector at each end will unlock the device promptly on arrival at terminal, and record on the line above the time shown on clock.

.....
Inspector.

FROM THE FILES OF AN S. M. P.

June 3, 1911.

Mr. X. Y. Z., M. C. B.

Dear Sir: Referring to the present untidy condition of North Yard, please take steps to have same cleared up and put in a more respectable condition, at the carliest possible date.

Q. M. C., Supt. Motive Power.

June 6, 1911.

Mr. Q. M. C., S. M. P.

Dear Sir: In compliance with your order of the 3rd inst., I have to report that North Yard has been cleared up Bad order cars have been sent to the hospital tracks, scrap materials have been carefully piled up, and several large iron flower pots or vases have been stolen from parks and private yards, filled with suitable plants and placed in conspicuous positions through the yards.

X. Y. Z.,
Master Car Builder.

REINFORCED CONCRETE ROUNDHOUSE FOR THE NEW HAVEN R. R.

The New York, New Haven & Hartford R. R. has under construction, according to the "Engineering Record," a large reinforced concrete roundhouse at the Cedar Hill freight yards in the city of New Haven and about 2 miles from the present passenger station. This circular structure, 360 ft. in diameter, contains stalls accommodating 43 steam locomotives or 86 electric locomotives and will be used in lieu of several smaller roundhouses. It is located on the west bank of the Quinnipiac River and when completed will be the largest roundhouse of the New Haven system. Both freight and passenger engines will be stalled in the ring, which is 86 ft. wide and about 35 ft. high with a reinforced concrete roof covering the entire area. Within this covered ring is an open area 188 ft. in diameter, in the center of which is being constructed a 75-ft. half-through steel turntable. The site is about 3 miles upstream from the mouth of the river in the New Haven harbor at a point where the land is marshy and often covered with water at high tide.

Because of the unfavorable nature of the underlying soil it was an extremely difficult proposition to prepare it for the foundation and besides the river is about 20 ft. deep at a distance of 25 ft. from the outer wall of the roundhouse, which necessitated some means of preventing the bog from working into the stream when the weight of the fill is imposed upon it. Accordingly, after the piles had been driven, the river bank was rip-rapped with 1,000 tons of large stones averaging about 1.5 cu. ft. in size. Tests showed the bog to be about 3 ft. deep, under which was 15 to 20 ft. of silt and then a stratum of clay and sand over a bottom of hard clay.

About 4,500 spruce piles, 40 to 50 ft. long, were first driven by means of three pile drivers, one using a hammer of 2,200-lb. weight and two using 3,000-lb. hammers. These pile drivers were operated on timbers and rollers and were hauled to different parts of the work by means of a block and tackle. Each pile is loaded to between 7 and 8 tons. The foundations are approximately on a level with the marsh and about 30,000 yd. of cinder fill, 6½ ft. deep, will be used inside the walls of the roundhouse to bring the ground up to the level of the tops of the pits. This fill will be worked in from the upper edge of the rip-rap to further prevent possible movement of the bog.

A 12-in. cap of concrete was placed over the piles, the cut-off line of the top of the piles being 6 in. above the bottom of the footing. Five piles were driven under each exterior wall column and six ⅝-in. square twisted steel bars, 4 ft. 6 in. long, arranged in a circle were placed in the column foundation; the diameter of columns out to out of bars is 11 in. The distance between columns on the outer ring, under the exterior walls, is 25 ft. 7½ in. and the foundation wall is arched across this intervening space and reinforced with two 60-lb. rails embedded in the concrete to support the ring wall, which is constructed of both concrete and brick.

The top of all column foundations is 7 ft. above the cut-off of piles and the top of the rail is 5 in. above the top of these foundations. The column foundations are battered from the base up and vary in dimensions according to the weight imposed upon them. The bases are both square and rectangular in shape. Under the engine pit a 12-in. footing cap was placed over the piles and the tops cut off as described for the column foundations. The pit piles are spaced about 2 ft. center to center longitudinally and are arranged as shown on the plan. Two 15-in. vitrified salt-glazed sewer pipes were run out under the pit foundations for a heating outlet. Pit No. 31 crosses the center of the drop pit and the plan of foundation was altered to provide for the extra load at this point. The rails are run to the outer foundation wall, which is 4 ft. 8 in. x 10 ft. 6 in. at the base. Two 8-in.

I-beams, 6 ft. 2 in. long, were used to reinforce this beam under the rails. These beams were set into slots in the piers at either end and rested on ¾ x 10 x 16-in. shoe plates fastened by 1¼-in. anchor bolts extending 8 in. into the concrete.

Each of the forty-three engine stalls has a pit 62 ft. long, 4 ft. 6 in. wide and 2½ ft. deep with a concrete floor laid on a well-rammed cinder fill and concrete foundation walls. The rails are fastened to the tops of the five foundation walls by means of ¾-in. dowel bolts cast in the concrete. The bottom of the engine pits is built with a crown at the center, sloping to either side for drainage. Wrought-iron gratings with 2 x 5/16-in. slats are placed over the openings of the steam and drainage pits. Extending across three of the engine pits is a drop pit. Movable 100-lb. rails span this pit at the three points where the engines cross and 60-lb. rails are laid on either side of the drop pit for transferring the parts taken out for repairs; these latter rails are greased in order to slide the transfer trucks over. Hydraulic plunger jacks under each of the three engine pit tracks are used to sustain detached trucks or other parts. A 6-in. I-beam trolley conveyor is installed over the drop pit. The beams supporting this trolley are reinforced with three ¾-in. rods at the bottom for the full length and two ¾-in. rods at the top for one-quarter of the span each side of the support. The track is supported by ⅝-in. rods attached to the concrete beams above by heavy anchors and fastened to the I-beams by plates and bolts. The floor of the engine pit is reinforced with expanded metal and 60-lb. rails. Square rods are used to strengthen the steam pit floor.

The long columns which supported the roof are reinforced by square twisted rods placed in the four corners and hooped with No. 3 wire 12 in. on centers. Metal corner beads on the legs of the columns consist of 2 x 2 x3/16-in. angles anchored by means of counters and stove bolts 6 in. long and spaced about 24 in. on center. The same size angles are used on wood sills and fastened by means of long screws. Anchorage for the window buckwork was provided by leaving ⅞ x 6-in. slots and casting No. 9 wire anchors in the concrete 12 in. on centers. Continuous nailing strips 2 x 1½ x ⅞ in. were anchored in the sides of columns where it was necessary. The exterior walls above the foundation are built of brick 12 in. thick, and inclosed the entire engine ring. Between these columns, in each bay on the outside circular wall, there are large window sashes with 12 x 14-in. lights; the upper and lower sashes are made to slide for ventilation, while the center sash is stationary. The inner circle is fitted with wood slat rolling doors in each bay; the doors are built of Georgia yellow pine slats with glass panels inserted to give light at this point. Each rolling door has a small sliding wicket door which rolls up with it. A continuous line of sash takes up the space between the tops of doors and the roof levels. All mullions and sills are of concrete reinforced with square twisted rods. Cast-iron weights are installed for operating the windows on the outer circle of the house, and wood bucks, 2 x 4 x 8 in. in size, four to each jamb, serve for nailing strips. A wooden door opening ouward is provided from the house to the entrance track and an iron ladder runs to the roof at the end of the entrance stall.

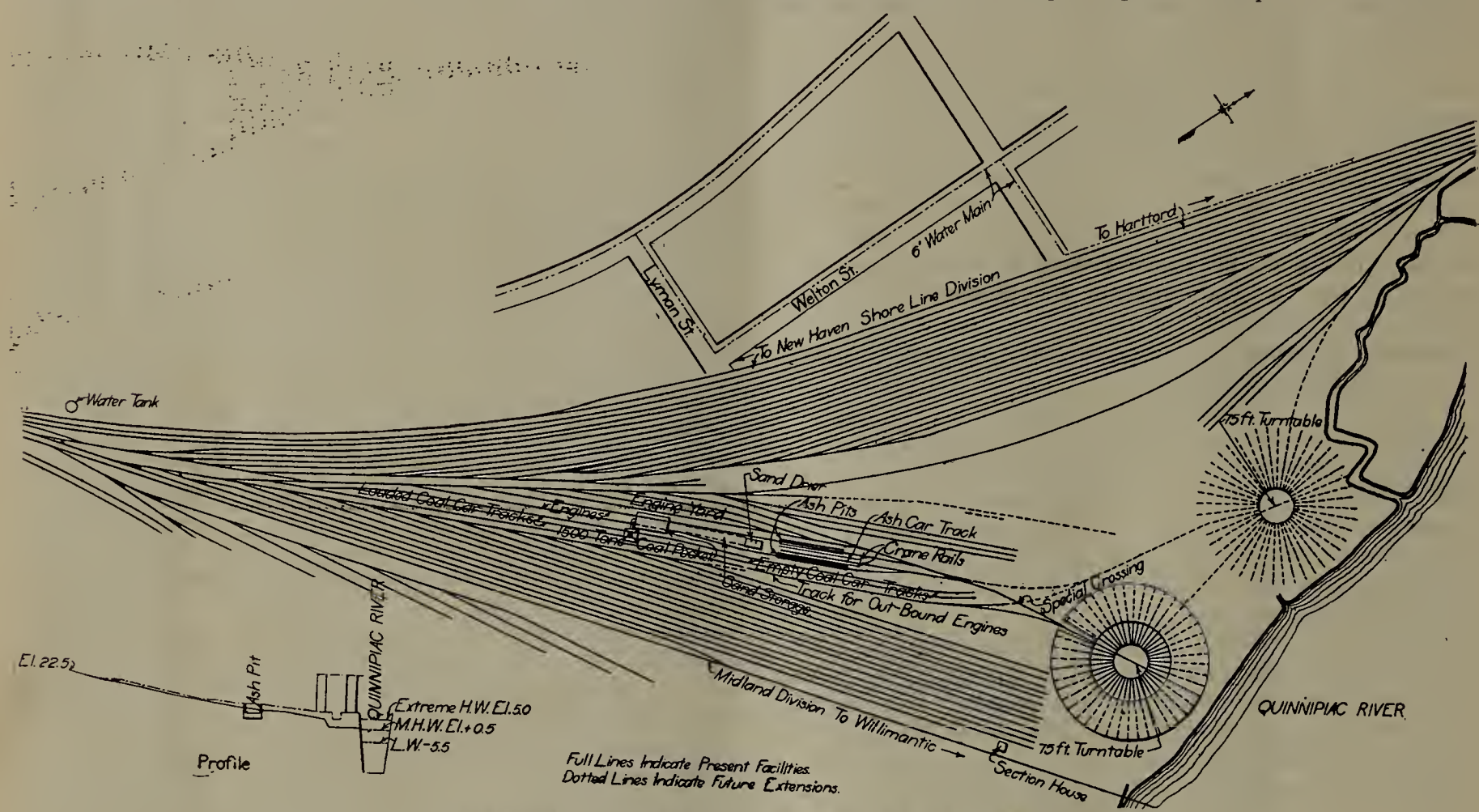

General Layout of Cedar Hill Yards and Engine House.

The roof is carried around the ring in three sections, the center portion, 28 ft. 6 in. wide, being elevated about 6 ft. to provide for the insertion of stationary and of pivoted sash with 12 x 12-in. lights for ventilation and lighting. The middle section slopes outward for drainage, while the two other sections are pitched as shown for the same purpose. The roof slab is 2½ in. thick of concrete reinforced with Clinton wire cloth and covered with a three-ply slag roofing. Large radial roof girders about 1 x 3 ft. and about 7 ft. on centers support all three sections of the roof. Square rods in the bottom varying in size from ⅝ to ⅞ in. serve as reinforcement. Some of these rods are bent up at the ends and over supports to provide for shear and negative bending moments, while others are bent through brackets into the walls and columns. Roof purlins averaging 5 x 12 in. in section and about 5 ft. on centers run the entire length of the roof sections and are reinforced with square rods placed in the bottom. Sheet lead cornices and drips are attached to the outer edges of the roofs. Conduits for electric light-

ing are installed in the floors, roof beams, walls and columns.

The apparatus for heating the pits for workmen is being installed by the B. F. Sturtevant Company and consists of a No. 14 multivane fan, an 8 x 10-in. vertical engine and two independent groups of 1-in. wrought-iron pipe with a total of 8,730 lin. ft. of pipe, with wrought iron fresh air connection. Fresh air is drawn through an opening in the outer brick wall, which is covered with a louvre ⅜ x 4 in. in dimensions and a galvanized wire screen of ½-in. mesh with channel frame, and forced over the hot-air pipe and through the hot-air ducts which are carried inside of the outer wall of the roundhouse to the trunks leading to the pits. This duct is lined with semi-porous hollow tile bonded to the walls with galvanized steel wall ties and finished with ½ in. of cement plaster throughout. The size of the duct diminishes from the fan connection after each pipe branch by sloping the sides and bottom. Each branch of hot-air heating system from the main duct is made of salt-glazed vitrified sewer pipe with necessary ⅛-in. bend increasers and Y-branches. The heating apparatus is designed to heat twenty-two pits at a time. Pipe hangers, which are made adjustable to take up or move over as desired, are cast into the concrete roof beams at required points.

A smoke jacket of standard design is being installed over the engine pits extending from the hood through the roof to a height of about 13 ft. A cast-iron frame is bolted to the concrete around the opening by 1 x 30-in. anchor bolts and fastened to the jack by an angle and ¾-in. stud bolts. The hood and stack are lined with ⅜-in. asbestos lumber furnished by the H. W. Johns-Manville Company.

The turntable is built of 17-ton plate girders which run on a bronze saddle or bearing at the center and sixteen wrought-steel center rollers set in under the track radially. Ball bearings were used around the outer ends of the table, which gives a rolling bearing in two directions, vertically and horizontally. Forty-nine piles, in seven rows 2 ft. center to center, were used under the center bearings and three rows of ninety-three piles about 2 ft. 5 in. center to center under the outer ring. Dowel bolts ¾ in. long were cast 7 in. in the concrete around the outer circle to hold the 8 x 12-in. yellow pine timbers and 7½ x 8-in. ties. These bolts have square heads and washers set into the timber and the hole is filled with pitch. A reinforced concrete drain pit, 4 ft. square, delivers the water from a gutter around the center bearing to an 8-in. cast-iron drain pipe. The ash pit is built of reinforced concrete with granite paving on the bottom and lined with firebrick to protect the concrete from the action of hot ashes. A gantry crane and clam-shell bucket will be used to transfer ashes to cars.

The roundhouse is part of a group of proposed buildings to include in addition a 1,500-ton coal pocket, a sand drier, an auxiliary 75-ft. turntable and a water tank, as shown in the location plan. The present contract includes the 55,400-gal. water tank and it is now under construction. Foundations for this tank were laid on 45-ft. piles projecting 6 in. into the 1-ft. cap, the cut-off point being at 0.0 elevation. The reinfroced concrete tower consists of four columns 16 in. square under the center and eight smaller columns, 14 in. square, spaced evenly around the outer edge. The outside columns are rigidly connected by horizontal braces around the bottom and at the middle point, while the reinforced concrete floor system serves to stay the top. Diagonals 9 x 12 in. in size are used as lateral bracing for the four interior columns. The floor slab is 9 in. thick and 30 ft. 9 in. in diameter with the upper surface at El. 45.25. Reinforcement of the slab consists of ½-in. square twisted rods, 4 in. center to center, laid in both directions in the upper part of the slab. The slab is supported by beams, 1 ft. 2 in. x 2 ft. 6 in. in dimensions, measured to the top slab and running diagonally across the bottom between columns and

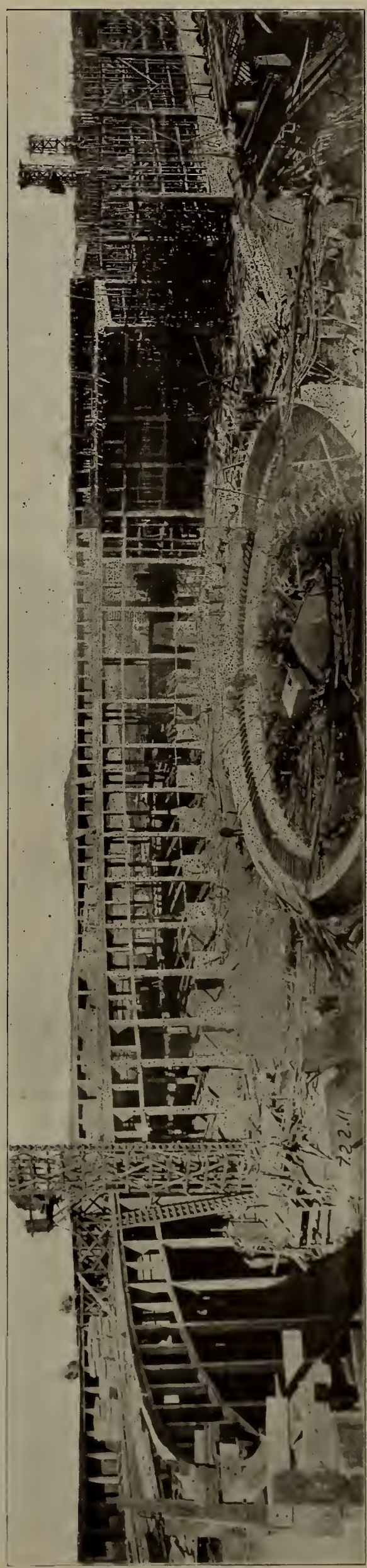

Construction View of Cedar Hill Roundhouse, N. Y., N. H. & H. R. R.

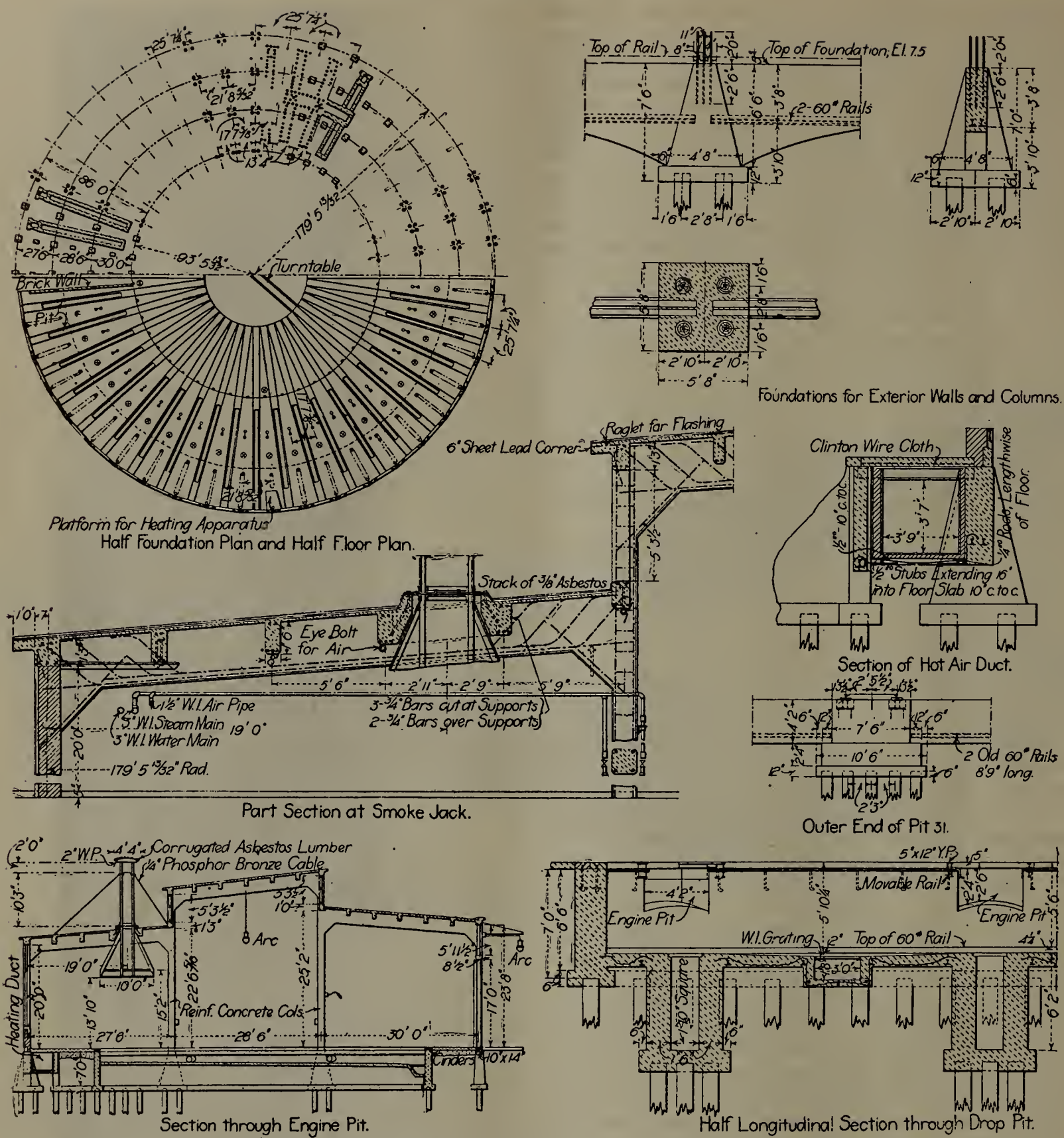

Details of Concrete Roundhouse, N. Y., N. H. & H. R. R.

also a large beam around the outer edge between columns. All concrete above the tops of the piers, El. 7.5, is a 1:2:4 mixture and below this elevation a 1:3:5 mixture was used. The columns are reinforced with two old third-rails bolted back to back with ¾-in. bolts about 3 ft. apart and fastened with two old fish plates where they break joints. These old third-rails weigh about 95 lb. per yard and are wound every 3 ft. with three turns of ⅛-in. wire. The bottom of the slab and girders is reinforced with corrugated bars bent up over the supports to provide for negative bending moment and shear. The tank itself is constructed of wood and has an outside diameter of 24 ft.

With the exception of 1⅞-in. lumber used for columns and beam bottoms all forms are built of ⅞-in. stock. The column forms are securely tied by 4 x 4-in. wood collars bolted together and spaced about 3 ft. on centers vertically. Because of the treacherous soil around the building the column forms and roofing forms are shored up by a large number of old steel rails laid on the upper surface of the engine-pit foundations. Forms are fastened with double-headed nails, the second head projecting about ¼ in., giving a good hold for a claw hammer, and it is said that this method effects a great saving of time in taking the forms apart.

A 1:2:4 mixture of concrete of medium wet consistency is used in the superstructure of the roundhouse, while a 1:3:5 mixture is used for foundations. The engineer in charge is having a complete set of crushing tests made on all concrete. Six-inch cubes, of each day's pouring, are made at the building in steel forms and forwarded to the testing laboratory of the railroad. Tests are also frequently made on the sand to ascertain the percentage of foreign matter. Cubes of the 1:2:4 mixture show an average crushing strength of 1,570 lb. at ten days and 2,740 lb. at thirty days, while the 1:3:5 mixture tests at 930 lb. and 1,890 lb. respectively.

Giant Portland cement is being used in the roundhouse proper and Alpha Portland in the foundation of the outer turntable. The reinforcement consists entirely of square twisted rods with the exception of the 2½-in. roof slab, which is reinforced with Clinton wire cloth. Trap rock from Middlefield, Conn., and Wallingford sand are used for the

concrete. Economy double-headed nails, made by the F. A. Neider Company, Augusta, Ky., are used in all form work.

The preliminary work began last fall, but it was not until May 1 that the building was actually under way, since which time a force of about 250 men has been employed and the work is now being rapidly pushed to completion in order to be ready for occupancy this fall. A cement shed, with a capacity of four carloads, is located near the mixer, while sand and crushed rock are shoveled from freight cars onto piles alongside the industrial tracks, from whence they are conveyed by Orenstein-Arthur Koppel Company cars to a 30-ft. Ransome bucket elevator and hoisted by a double-drum engine to bins above the mixer. This engine also operates the cement elevator, which runs up to a platform above the mixer hopper, where one laborer feeds in the required proportions of cement. All concrete is mixed in a No. 2 Ransome mixer and distributed to the different sections of the work in a 30-ft. Lakewood car operated by an endless chain over a wood trestle, about 20 ft. high, which is built from the elevator at the mixer stall, over the center of the turntable, to a similar elevator at the opposite side of the clear area. One Ransome and one Insley 30-ft. bucket are used in the elevators, which extend up to the roof. The car and Ransome bucket are operated by the engine shown near the mixer, while a separate engine is used for the Insley bucket. Concrete is dumped from the car into the feeding hoppers when the elevator is down and is pushed in 6-ft. Ransome carts to any section of the building. These carts were run inside the covered ring on a low trestle when casting the pits and foundations, while for the roof itself and the columns the carts were run on boards placed on the roof. By the above arrangement an average of 100 yd. of concrete is laid in a day. It is stated that at favorable points 27 yd. have been laid in an hour. All columns are cast with the roof and are tamped with a long wooden pole having an iron point, care being taken not to displace the reinforcement. Steam for the entire plant is furnished by a 125-hp. marine boiler.

The Cedar Hill roundhouse was designed by the engineering department of the New York, New Haven & Hartford R. R., Mr. E. H. McHenry, vice-president; Mr. Edward Gagel, chief engineer; Mr. H. L. Ripley, engineer of construction, and Mr. J. M. Sullivan, Jr., assistant engineer in charge of the work. The general contractor is F. T. Ley & Company, Inc., of Springfield, Mass., Mr. W. G. Smith, superintendent.

SUPERHEATER LOCOMOTIVES.

The following is taken from information furnished by the Locomotive Superheater Co., 30 Church St., New York, by courtesy of Geo. L. Bourne, V. P., People's Gas Bldg., Chicago, and supplements that published on page 172 of the May issue of the Railway Master Mechanic:

General.

The present demand for locomotives with increased hauling capacity within the limits imposed by the strength and clearance of the roadbed and structures, requires the use of larger cylinders and increased steam capacity.

The saturated steam locomotive cannot meet these requirements if large cylinders and short cut offs are used on account of the large steam losses, running up to 30 per cent, caused by cylinder condensation. With a longer cut off they are limited by boiler capacity.

The superheated steam locomotive however, using steam at a temperature of 600° F., permits the use of large cylinders and short cut-off, i. e., the economical use of the steam, because the superheat prevents the cylinder condensation and attendant losses.

These characteristics of the superheated steam locomotive with the additional important ones of 20 to 25 per cent economy in coal and 30 to 35 per cent in water explain the universal inquiry and demand for the superheater locomotive.

The front end should be carefully inspected at regular intervals. The flues can be easily inspected from the front while a light is held at the firebox end.

At regular intervals the boiler flues should be blown out the same as the boiler tubes are blown out, and thoroughly cleaned of all ashes, cinders and soot. At the same time any deposit which may have accumulated on the return bends nearest the firse box should be broken off and removed.

When handling the engines about the engine house, yards, etc., before the cylinders are warmed, the cylinder cocks should be kept open until dry steam appears.

Engine Men.

The general operation of the superheated steam locomotive is the same as the ordinary saturated steam locomotive. Cylinder cocks should be kept open when starting until dry steam appears.

A smoky fire has a lower flame temperature, reduces the degree of superheat and uses more coal.

The engineer should know that the superheater damper is open while using steam and closed when steam is shut off.

Leaks in the front end or superheater units, flues stopped up and derangement of draft appliances not only affect the steaming of the engine, but reduce the degree of superheat and should be reported and corrected at once.

Blows in cylinder and valve packing should be reported and receive proper attention, as they will cause scoring, due to removal of oil from wearing surfaces.

Repair Shop Men.

When the engine is in for general repairs the superheater parts should be carefully cleaned, examined and all defective parts should be repaired or replaced. The superheater units should be painted with a thin coat of hot tar as soon as cleaned to prevent rusting. The ball joints should be reground and joint should show a good continuous bearing all round the ball.

With the flat gasket type of joint between header and superheater units the flange on the unit should come up parallel to the face of header so that the gasket has only to make the joint and does not have to take care of any angle between the flange and header.

In replacing the superheater units it is essential that they be properly located in the top of the flue to prevent obstruction to the flow of gases through the flue.

In locating the superheater header, its face for superheater unit joints, should be square with the tube sheet, parallel to the top row of flues and the correct distance above them to insure correct position of the superheater unit in the flue. It should be firmly supported at the ends by header supports securely fastened to the sides of the smoke box.

The joint ring between the header and dry pipe should have a flat and ball face to permit free adjustment of the header. On reassembling, the superheater should be subject to same water tests as boiler.

The pistons should be removed from the cylinders, cleaned, examined, and all sharp corners filed off. In reassembling, piston should be lined up central in cylinder and be carried by piston rod extension and crosshead guides.

The metallic piston and piston rod packing should be free from the weight of the piston, and fit tight on the rod and in the cylinder bore respectively. For piston rod packing a mixture of 80 per cent lead and 20 per cent antimony is recommended.

All relief and vacuum valves should be cleaned, examined and have all joints reground and damaged parts renewed. The cylinders, cylinder heads and steam chest should be carefully lagged and have lagging properly protected.

Shop Kinks

An item good enough to publish is good enough to pay for

CHICAGO & ALTON R. R.

By R. J. McGrail.

The equipment of a modern railroad shop has been rapidly coming to the front as one of the great questions confronting superintendents, master mechanics and foremen all over the country.

The matter of having good machine tools and first class men to operate them is a very important factor, but if the workman is handicapped by lack of system, much time is lost before the actual work is started which tends to decrease the output.

Cleanliness and sanitary conditions should exist in all modern shops and in order to keep a shop clean, things should be so arranged that there are no corners for the accumulation of dirt. Thus, the long old fashioned bench along the wall has given place to the shorter bench which is placed in the open where everything is exposed to full view, thus eliminating the possibility of the untidy mechanic throwing scrap and waste material under the bench out of sight and where it will accumulate.

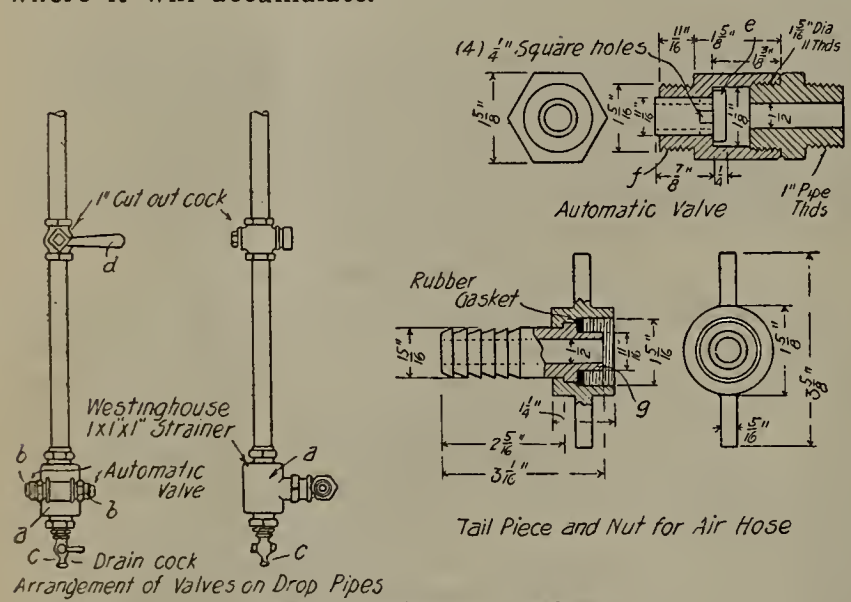

Fig. 1—Shop Air Valve.

The place for scrap material is in the scrap bin, and the waste material should be taken care of in refuse receptacles, placed conveniently about the shops. Suitable racks should be built for taking care of the raw material and finished articles.

The method of handling material requires special attention and, in fact, the whole system of shop operation is a study which requires continual application in order that the desired results can be obtained.

J. T. McGrath, now superintendent of rolling stock of the Chicago & Alton R. R., had considerable experience with modern shop methods when he was with the Grand Trunk Railway.

It will be remembered that the Grand Trunk recently built a modern locomotive shop at Battle Creek, Mich., and to Mr. McGrath was given the task of planning and equipping the shop, as well as bringing it up to its present high state of efficiency. He is the originator of a large number of shop kinks, a few of which are given below:

Figure 1 shows the arrangement of air valves throughout the shop. A Westinghouse air brake pipe strainer is connected to two automatic valves (b-b). The convenience of this arrangement is, that the strainer not only acts in its capacity as a strainer, but also acts as a receptacle for water in the pipes, which may be drawn off by means of the drain cock (c). In case either of the automatic valves require repairing or the strainer examined, a cut-out cock (d) is placed in the pipe above.

The details of the automatic valve are shown in the same figure. The valve (e) is kept constantly against the seat by the air pressure when no hose connection is made. The tail-piece and nut are so arranged that in screwing the nut to the threaded portion (f) of the automatic valve, the projection (g) on the tail piece forces the valve (e) open, admitting the air through the 1-4-in. square holes in the valve stem. When the air is taken off the valve automatically closes again.

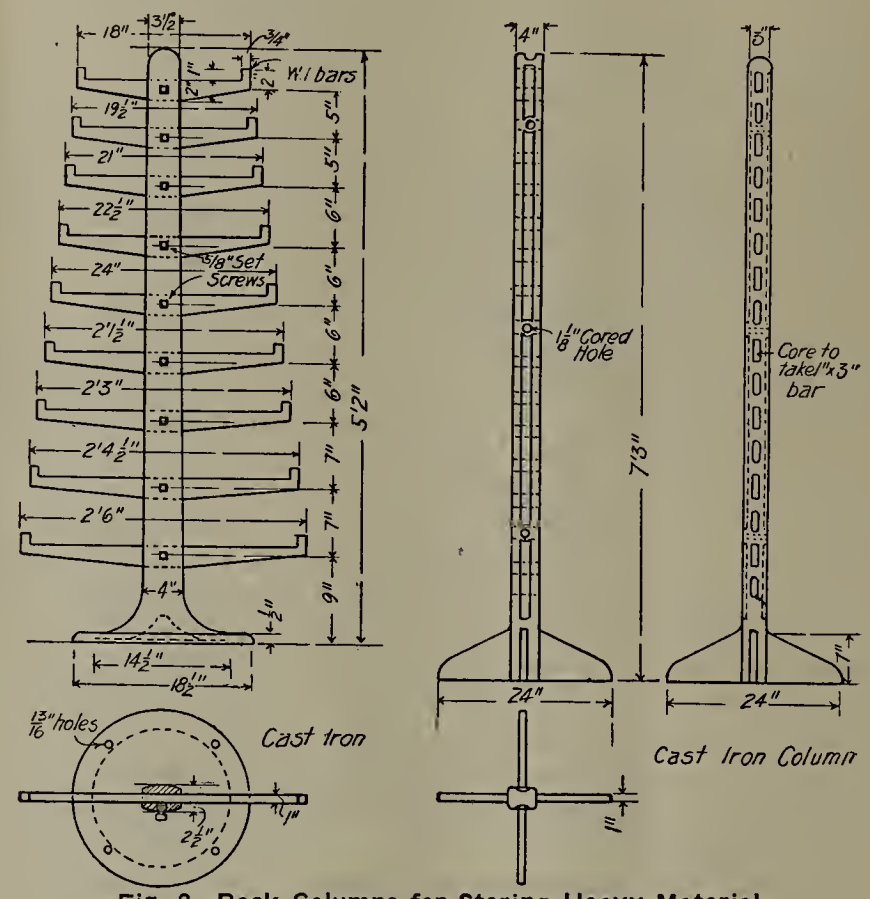

Fig. 2—Rack Columns for Storing Heavy Material.

The sketch at the left in Figure 2 is a cast iron column with wrought iron arms. Two of these, placed at an interval of a few feet, make a very neat arrangement for the storing of light bars of wrought iron or steel. Excellent pipe racks can be made out of them and sometimes boards are placed on the arms forming a series of shelves which may be used for various purposes. The right hand sketch in the same figure is another column used in the construction of racks for storage of large quantities of material.

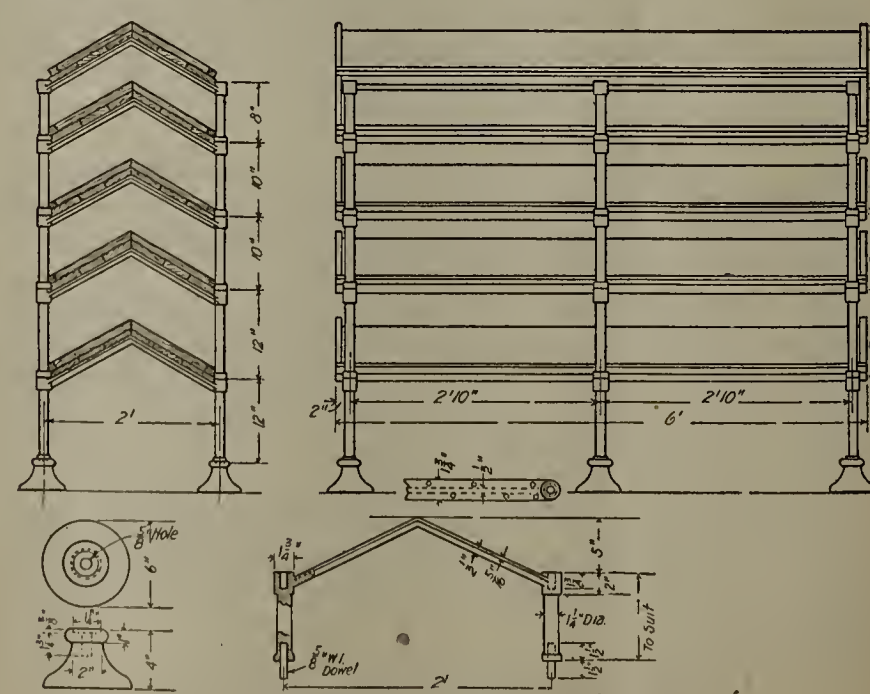

Fig. 3—Sectional Rack for Tool Room.

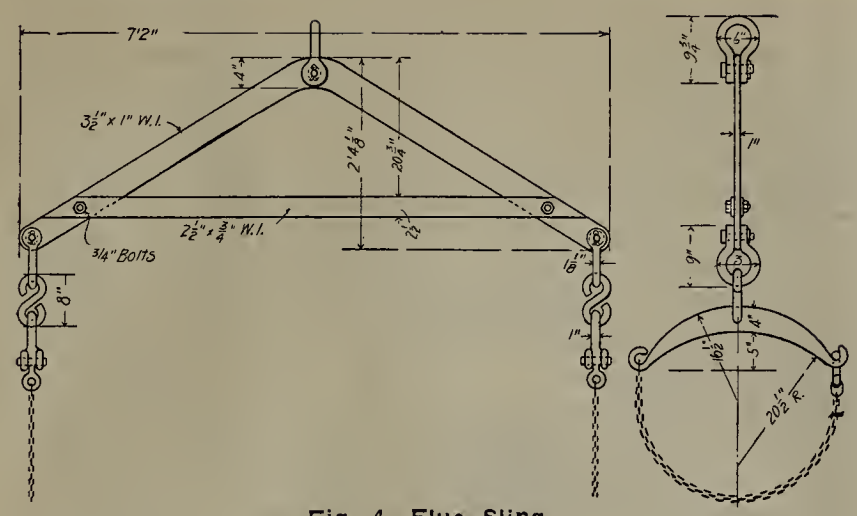

Fig. 4—Flue Sling.

Figure 3 is a sectional rack for use in the tool room. The construction of this is very simple, as will be seen from the sketch. A detail of the casting from which this rack is built is shown and it will be seen that these are made interchangeable. This makes an excellent rack for taking care of drills, reamers, etc. It is especially adapted to a tool room where space is limited, on account of being able to add to the number of shelves as occasion requires.

Figure 4 is a sling for carrying boiler flues by means of an overhead crane. It makes a neat and effective device for this purpose.

Figure 5 is a hard grease press—very simple in construction but effective in its work.

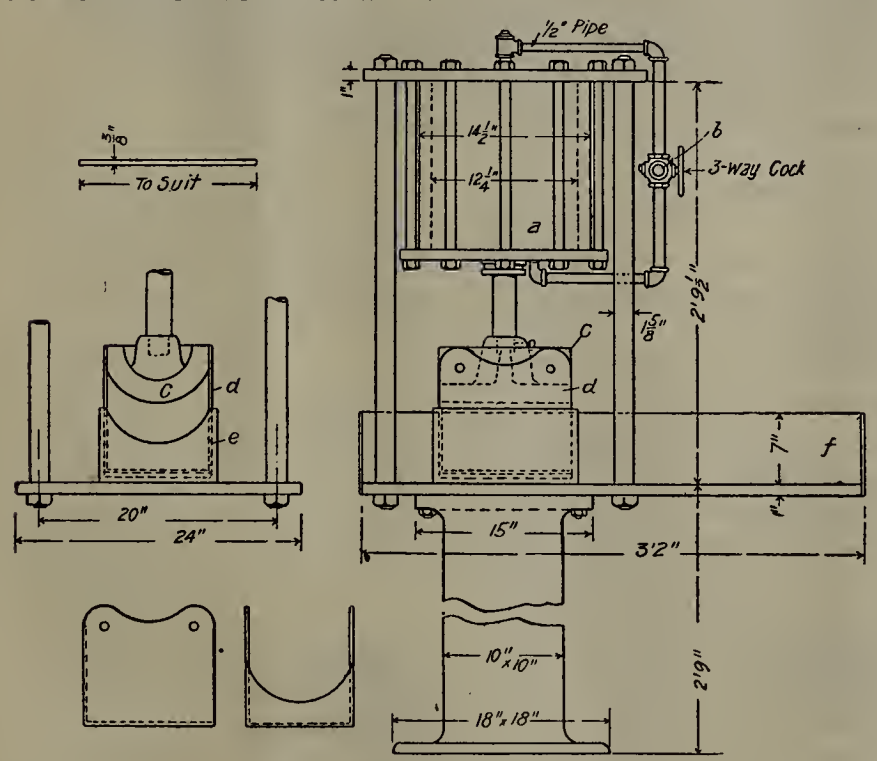

Fig. 5—Hard Grease Press.

The cylinder (a) is operated by the three-way cock (b); the plunger (c) fitting into a light metal receptacle (d), similar in shape to the locomotive axle box cellar. This again is fitted into a die (e) of the exact size as the cellar. Sufficient hard grease is taken from table (f) and placed in the receptacle (d), while the plunger (c) is elevated to its highest point. The plunger (c) is then forced down and the grease pressed into the required shape. To take the cake of grease out, the pins (g) are placed through the holes (h) in receptacle (d.) The plunger (c) is then elevated, bringing with it the receptacle (d) containing the cake of grease. The grease is then easily removed from the receptacle (d) on account of it having only three sides closed in, one side being left open for the purpose of sliding out the cake.

Figure 6 shows a shop truck equipped with roller bearings. This is a very useful article in the machine shop or in fact any place where there is a hard and even floor. The frame is constructed of angle iron, well supported by bent wrought iron bars, making it capable of carrying any load that may be placed upon it. It is a time saver in getting material from one part of the shop to another, as it frequently can be loaded and rushed off to some distant corner of the shop in less time than it would take to do so by means of the overhead crane.

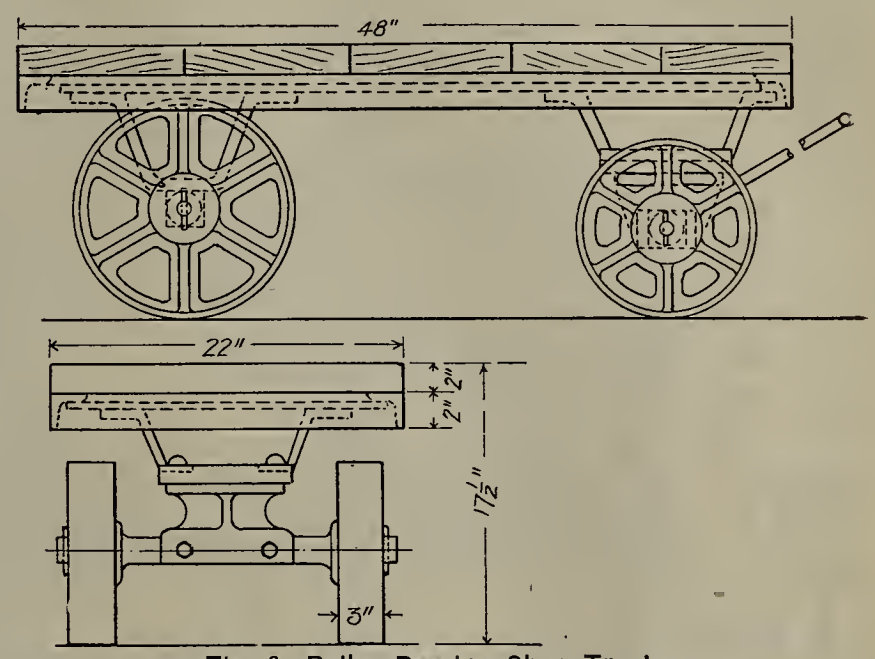

Fig. 6—Roller Bearing Shop Truck.

Figure 7 is a sectional elevation of the air brake testing plant, located on the balcony. The air brake repair department is located in the immediate vicinity, the pumps and other material being raised to the balcony by means of the electric traveling crane in the machine shop, and picked up by the air hoist shown in sketch.

This hoist serves the entire air brake department. In the background are placed the auxiliary reservoirs, while immediately in front are the air pump stands. To the right is the bell-ringer testing stand, and at the left the brake cylinders are shown, attached to one of the wall columns next to the triple valve testing tanks, in front of which are the brake valve stands, while above is the train line piping. This makes a neat and compact testing plant which needs to be seen in the reality to be appreciated.

(To be continued.)

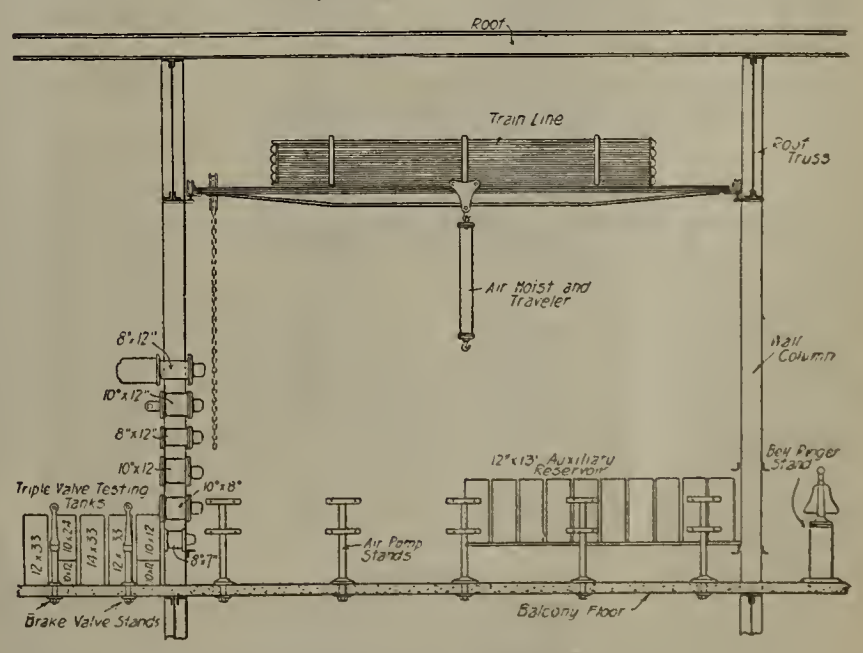

Fig. 7—Air Brake Testing Plant.

A trade journal in speaking of the recent wreck of a fast flyer says: "If, in future accidents, the steel cars do not stand the test better than those in the instance cited, lumbermen will be justified in claiming equal or superior merits of the wooden car built on a steel frame, and consequently entitled to regain the market for their commodity which steel in this connection has to a considerable extent supplanted." If you haven't guessed it, we will say that this is from a lumber paper, The Lumber Review.

FRENCH FOUR CYLINDER LOCOMOTIVE.

The accompanying drawings, taken from "Engineering" (London), show the details of a four cylinder simple superheater passenger locomotive, built at the Paris works by the Paris-Lyons-Mediterranean Ry. for heavy fast service. The engine, which was delivered late in August of 1909, is now on exhibition at Turin. It is said to have run 46,500 miles.

At the same time this locomotive, No. 6101, was built, the railway built another of like dimensions, except in the cylinders, which were compounded and without a superheater. The latter engine, No. 6001, was tested out in the same service as the one illustrated, but not with the same good results. Following the results of the trials the railway ordered thirty more locomotives of the four cylinder, simple, superheater type here illustrated. Engineering gives the results of the tests in the accompanying table:

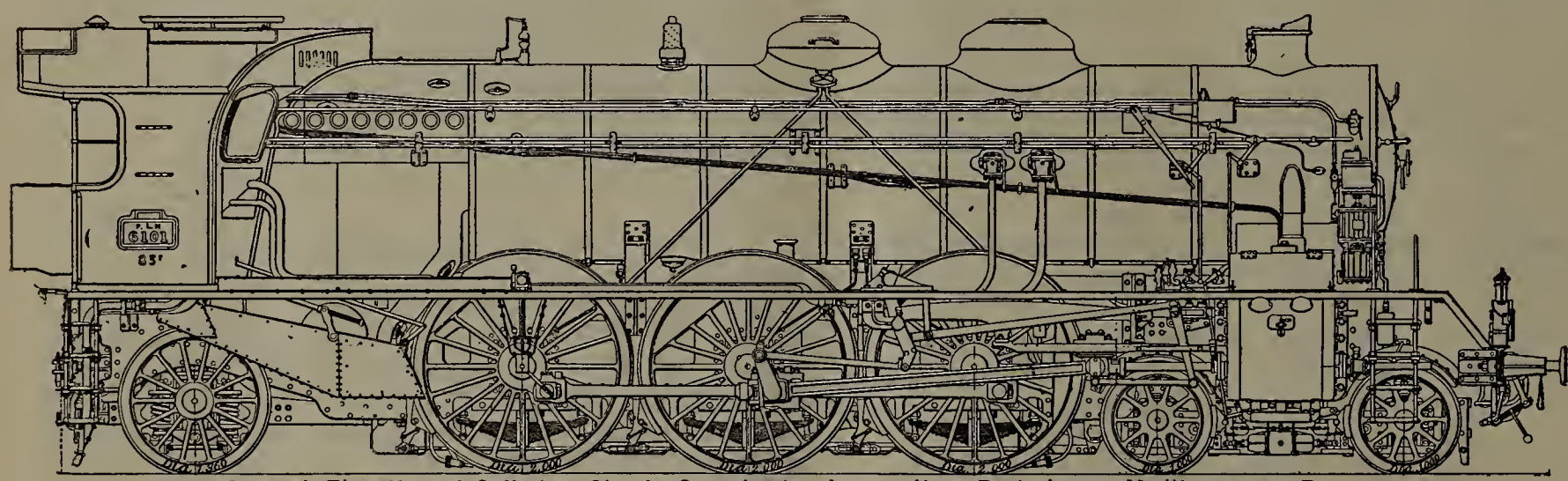

General Elevation, 4-Cylinder, Simple Superheater Locomotive, Paris-Lyons-Mediterranean Ry.

The following are the principal dimensions of the engine exhibited at Turin:

Total length of grate	7 ft.
Width of grate, front	6 ft. 10 ins.
Width of grate, rear	6 ft. 4 ins.
Grate area	45.25 sq. ft.
Inclination of grate	12 deg.
Height of firebox inside, front	6 ft. 7⅜ ins.
Height of firebox inside, rear	5 ft. 0¼ in.
Length of firebox inside, at top	7 ft. 5 ins.
Length of firebox inside, at bottom	6 ft. 9 13/16 ins.
Width of firebox inside, level with center of boiler	4 ft. 11 11/16 ins.
Width of firebox inside at bottom, front	6 ft. 10 ins.
Width of firebox inside at bottom, rear	6 ft. 3 11/16 ins.
Thickness of copper, sides and back plate	0.551 in.
Thickness of copper, tube-plate	0.984 in. and 0.551 in.

The boiler-tubes are of steel. There are 143 having 2.165 in. outside diameter, and 28 of which the outside diameter is 5.236 in.; the former are 0.085 in. thick, and the latter 0.157 in. The length of the tubes between tube-plate is 19 ft. 8 3/16 ins. The superheater tubes are also of steel; they form 28 sets, their outside diameter is 1.378 ins., and their thickness 0.137 in.

Heating surface, firebox	171.12 sq. ft.
Heating surface, tubes	2,176.58 sq. ft.
Heating surface, total	2,347.70 sq. ft.
Superheating surface	760.10 sq. ft.
Outside length of firebox shell at top	8 ft. 4 ins.
Outside length of firebox shell at bottom	7 ft. 7 ins.
Outside width of firebox shell at bottom, front	7 ft. 8 ins.
Outside width of firebox shell at bottom, rear	7 ft. 2 ins.
Diameter of boiler-barrel, inside large ring	5 ft. 6½ ins.
Length of barrel	19 ft. 4 ins.
Thickness of barrel-plates	0.590 in.
Inside length of smokebox	8 ft. 7 9/16 ins.
Inside diameter of smokebox	5 ft. 7⅝ ins.
Height of center line of boiler above rail-level	9 ft. 6 ins.
Water capacity up to 4 ins. above firebox crown	1,793 gals.
Steam space	130 cu. ft.
Working pressure	170 lbs. per sq. in.

The stack has an inside diameter of 19.1 ins. and 16.2 ins. Its top rim is at a height of 13 ft. 7 ins. above the rail-level. The top of the nozzle is 12¼ ins. below the center line of the boiler.

Distance between frame-plates	4 ft. 0⅝ in.
Thickness of frame-plates	1,102 ins.
Outside width of foot-plate, front	8 ft. 6⅜ ins.
Outside width of foot-plate, rear	9 ft. 5⅜ ins.
Length of engine outside buffers	45 ft. 10¾ ins.
Diameter of wheels—tires (2.756 ins. thick)—bogie	39.37 ins.
Diameter of coupled wheels	78.74 ins.
Diameter of trailing wheels	53.54 ins.

There are four cylinders, two outside and two inside, all are 18.898 ins. in diameter, with a 25.59-in. stroke.

Distance from center to center of outside cylinders	7 ft. 1 ins.
Distance from center to center of inside cylinders	1 ft. 8½ ins.
Length of outside connecting-rods	9 ft. 10 1/16 ins.
Length of inside connecting-rods	5 ft. 6 ins.
Lead of inside cylinder cranks over outside ones	180 deg.

The valve motion of both the outside and inside cylinders is on the Walschaert principle; the slide-valves are cylindrical,

COMPARISON OF TEST RESULTS OBTAINED FROM LOCOMOTIVES NO. 6001 AND NO. 6101.

—	Average Water Consumption per Unit of Coal Consumption.	Average Consumption per Horse-Power Hour, indicated on the Pistons		Average Consumption per Horse-Power Hour Absorbed by Tender Draw-Hook	
		of Coal.	of Water.	of Coal.	of Water.
Engine No. 6001	7.31 litres per kg. (0.73 gal. per lb.)	1.553 kg. (3.4 lb.)	11.27 litres (2.48 gals.)	2.661 kg. (5.9 lb.)	19.39 litres (4.27 gals.)
Engine No. 6101	7.12 litres per kg. (0.71 gal. per lb.)	1.350 kg. (2.98 lb.)	9.57 litres (2.11 gals.)	2.221 kg. (4.9 lb.)	15.74 litres (3.46 gals.)
Difference	0.19 litre per kg. (0.019 gal. per lb.)	0.203 kg. (0.42 lb.)	1.70 litres (0.37 gal.)	0.440 kg. (1 lb.)	3.65 litres (0.81 gal.)
Equal, per cent.	2.60	13.07	15.08	16.53	18.82

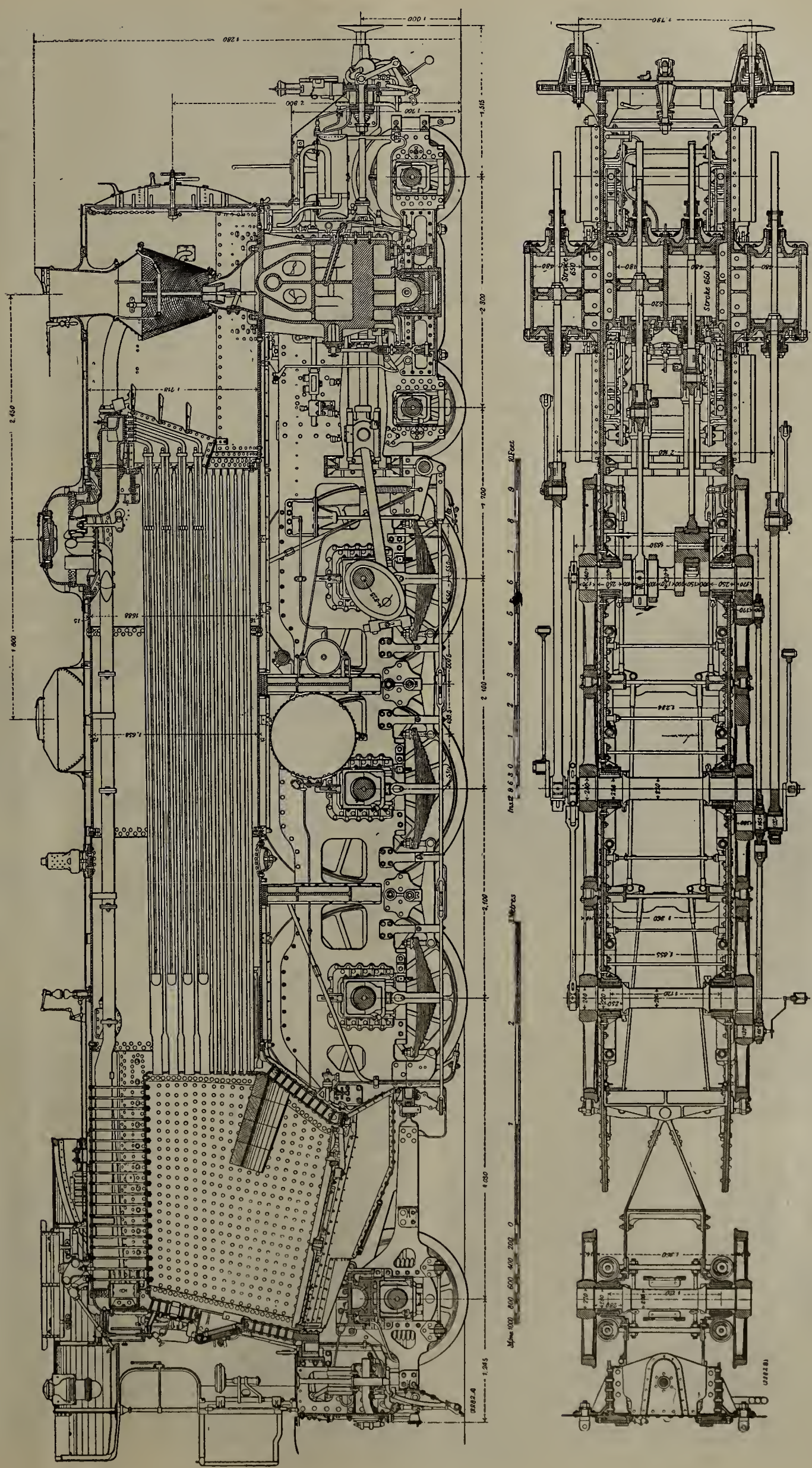

Four Cylinder Simple Superheater Locomotive, Paris-Lyons-Mediterranean Ry.

8.661 ins. in diameter, with a 4.764-in. maximum stroke. The outside lap is 1.181 ins., and the inside lap 0.157 in.

Average maximum steam admission	70 per cent
Angle of oscillation of link	43 deg. 32 min.
Length of steam-ports of all cylinders	20.158 ins.
Area of inlet and exhaust-ports	31.75 sq. ins.
Area of steam inlet-pipe	23.87 sq. ins.
Area of exhaust-pipe	37.20 sq. ins.
Maximum opening of adjustable exhaust-pipe	34.56 sq. ins.
Minimum opening of adjustable exhaust-pipe	23.25 sq. ins.
Weight of engine, empty	163,800 lbs.
Weight, in working order, on each bogie axle	22,000 lbs.
Weight, in working order, on each coupled axle	36,400 lbs.
Weight, in working order, on the trailing axle	29,300 lbs.
Total engine weight in working order	182,675 lbs.

The boiler, with the exception of the inside firebox, which is of copper, is built throughout of mild steel. The top part of the firebox shell joins direct on to the barrel, without an intermediate dished plate. The firebox shell is in three parts, the crown and two side plates double-riveted together. Hollow steel stays connect together the crowns of the inside and outside firebox; a row of transverse stays, drilled only for a length of 7.638 ins. at both ends, connect together the firebox side-plates at their top part, where they are flat, and not stayed by the crown stays. The front and rear firebox sheets are not vertical, but slant, as shown. The back plate is strengthened above the firebox by plate-stays and by two longitudinal stays fitted to the barrel.

The front and back plates and the side plates of the inside copper firebox are stayed to the outside shell by manganese-bronze stay-bolts, except at the part of the side walls underneath the fire-brick arch, where the stays are of copper. The firebox tube-plate is also connected to the barrel by ten steel stays. The inside firebox crown is curved transversely, and slants from the front to the rear. This assists in maintaining a good supply of water over the firebox when the engine is descending an incline.

The barrel is built of three rings. The longitudinal seams are butt-jointed with double straps; the inside strap is double riveted to each ring-plate, while the outside strap is single riveted only. The transverse seams are lap-jointed and double riveted. The boiler lagging consists of yellow brass sheets fitted to a series of supports and held in place by rings on the barrel and by screws on the firebox shell. The space

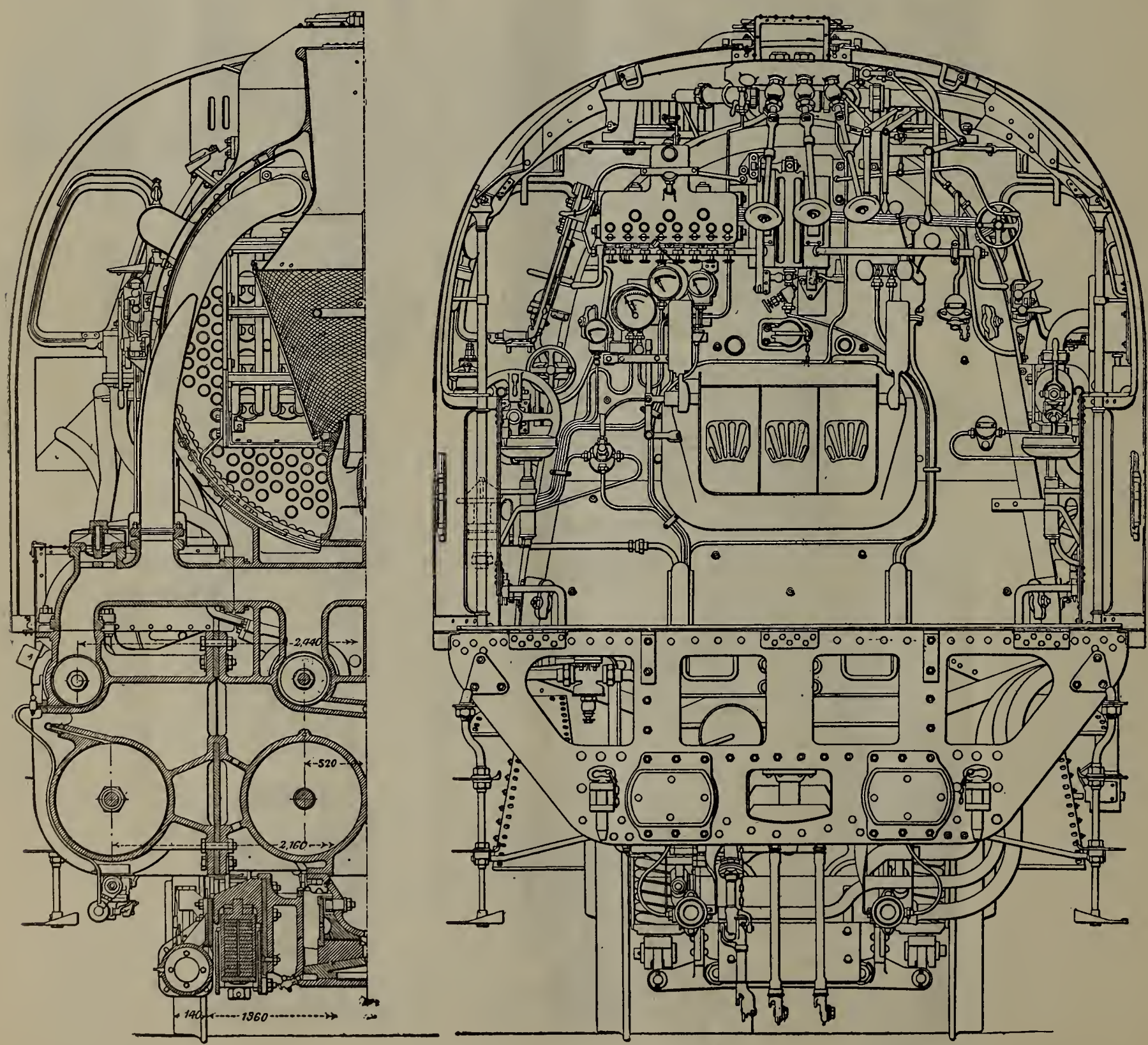

Sections of P.-L.-M. Locomotive.

between is filled with asbestos boards. The firebox door is on a horizontal hinge; it opens from bottom to top on the inside of the firebox. It consists of three flaps; the end ones open by means of levers, the central ones butting on either one of the former. The levers are fitted with counter-weights sufficiently heavy to maintain the door open, but not too heavy to prevent it from closing automatically under the action of an escape of steam should a boiler-tube burst.

The superheater is of the Schmidt type. The smoke-tubes containing the superheater tubes end in a casing closed in front by three doors which open out automatically as soon as the regulator is opened; the circulation of hot gases in the smoke-tubes is thus only made possible when steam from the boiler circulates in the superheater tubes.

The frame-plates are of steel, 1.102 ins. in thickness. They are inside the wheels and are connected together in front by an I steel buffer beam, in the rear by a draw-plate built up of plates and angles, by six intermediate cross-beams cast in steel, and by the inside cylinders.

The driving-axles are bored through their whole length, the diameter of the hole being 1,575 ins. The inside cylinders drive the first axle, which is a crank-axle; the outside cylinders drive the second axle. There is one valve-gear for both cylinders on each side of the engine; it is outside the frame-plate, and is, as already stated, of the Walschaert type. It operates the valves of the outside cylinders directly, and those of the inside cylinders through a rocking lever jointed at the middle of its length on a support fixed to the frame-plate. By this means the steam distribution to the inside cylinders is the reverse of that to the outside cylinders. The valves are cylindrical, and with inside admission. Air-inlet valves are fitted to the steam-pipes for running with closed regulator. The reversing gear is with screw mechanism.

The steam supply is effected through a regulator with balanced valve, placed inside the steam-dome, and operated by a lever from the footplate. The steam flows first to a compartment of the steam-collector, which distributes it to the twenty-eight sets forming the Schmidt superheater, whence it proceeds to the other compartment of the collector, and thence to the cylinders by two pipes fitted at the two ends of the second compartment. The slide-valves are lubricated by a sight-feed lubricator having eight tubes, two for each valve-chest, and fitted to the back plate of the firebox. Each cylinder is provided with a ball lubricator.

TRAVELING ENGINEERS' ASSOCIATION.

Following is the list of subjects for discussion before the 1912 convention of the Traveling Engineers' Association:

No. 1—"The increased efficiency of locomotives and benefits derived from chemically treated water."—Fred McArdle, Chairman.

No. 2—"Fuel Economy; What relation do mechanical appliances, such as locomotive superheaters, mechanical stokers, brick arches and the handling of trains, have on this subject?"—F. P. Roesch, Chairman.

No. 3—"Handling of long passenger and freight trains with modern air-brake equipment."—W. F. Walsh, Chairman.

No. 4—"What sort of inspection of locomotives and work reports should be required of engineers upon arrival at terminals?"—H. F. Henson, Chairman.

No. 5—"How can the traveling engineer get engineers and firemen interested in economical use of fuel and lubricating material, maintain that interest and the influence upon fuel economy and lubricating methods?"—Robert Collett, Chairman.

Paper—"What are the advantages vs. disadvantages of lead on the modern high class locomotives?"—J. Fred Jennings, Chairman.

TURN TABLES WITH MOTOR DRIVE.

Economy of time and of operating cost are the most important considerations in the operation of railway turn tables. The relative importance of these two features depends on the amount of traffic to be handled. At a very busy yard the saving of time becomes the first consideration, and any device that will lessen the time required to handle engines and cars is welcomed. The greatly increased amount of traffic that can be handled in a given time is of more importance than the saving in operating expense. At the same time the careful and efficient management of modern railway systems demands that no unnecessary expense be incurred either in the first cost of apparatus or in its operating expense.

The increasing frequency with which turn tables are used, as well as the increased weight of rolling stock in many cases, have compelled many roads to install power drive. Engines operated by air, steam, gas or gasoline have been used for this purpose and have resulted in a saving both of time and operating expense. However, the constantly increasing use of electricity in railroad service is causing these devices to be replaced by electric motors, since an available source of power is often at hand without the installation of additional generating equipment. The motor consumes no fuel while idle, it is always ready for instant service, and it is under perfect control in the hands of a single and comparatively unskilled operator.

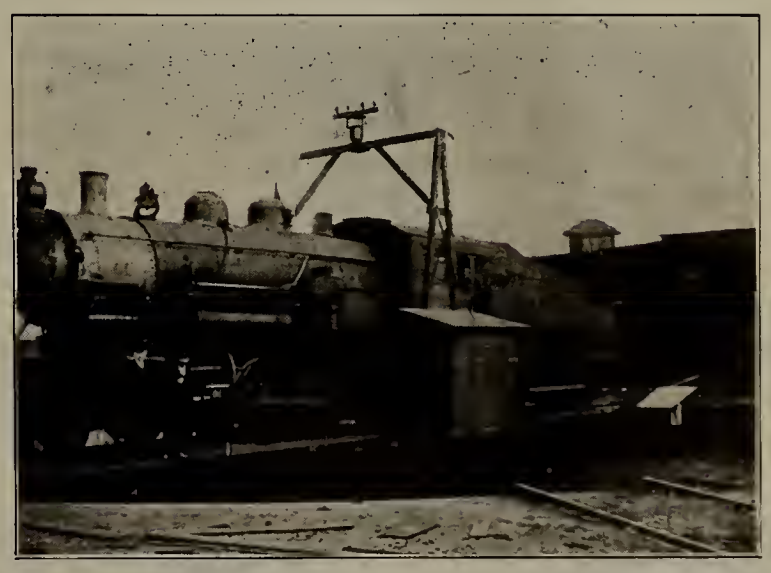

Electric Turntable Tractor in Operation.

Simply closing a switch and moving a controller handle starts the table, and an efficient brake enables accurate stops to be made. The motors are designed and built to develop the high torque necessary for rapid acceleration; under average conditions the heaviest locomotive can be turned completely around in two minutes, and the table stopped accurately at the right point. The motor equipment can be installed in the small space which could not be economically utilized for any other purpose.

Power is available at almost every important railway yard or terminal, and the expense of installing and maintaining electric conductors is very small compared with similar expense for steam or compressed air pipes. Moreover, the losses by radiation and leakage in steam and air pipes are considerable and continuous. There are no corresponding losses for electrically driven tables, and the efficiency of electric equipment is much higher than steam, air or gas engine drive.

Safety devices can be installed to insure full protection from injury in case of accident or careless operation. By the use of electric tractors, delays in handling locomotives can be avoided and schedules can be more easily maintained. The work is of an intermittent character and usually is rushing for a short period and then at a standstill. Especially

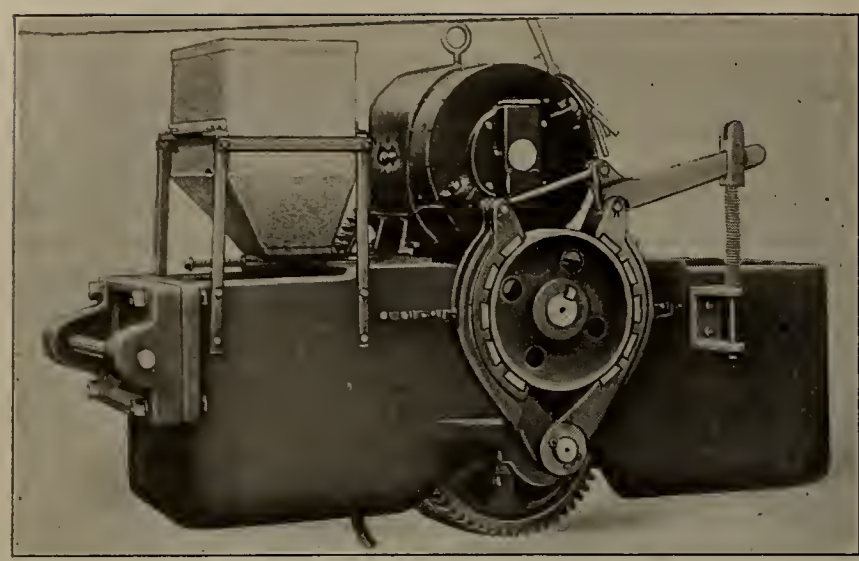

Electric Turntable Tractor.

is this true of turn tables at terminals, where many locomotives often come in at about the same hour. The much shorter time required by the electrical equipment to turn the table expedites the movement of the locomotive and relieves the congestion.

Economy of Electrical Operation.

Approximately average operating conditions are shown in the following account, which applies to a railway turn table where a Westinghouse electric tractor superseded hand operation. The value of time saving, although possibly more important than reduced cost, is neglected in the following consideration.

The total cost of the electrical equipment, including installation, was approximately $1,500.00.

Annual expense of hand operation:

Two men 24 hours per day, at 15c per hour.....		$2,628.00
Annual expense of motor operation:		
One man 24 hours per day at 15c per hour.	$1,314.00	
Current, average $8.00 per month.....	96.00	1,410.00
Annual reduction effected by the use of electricity..		$1,218.00

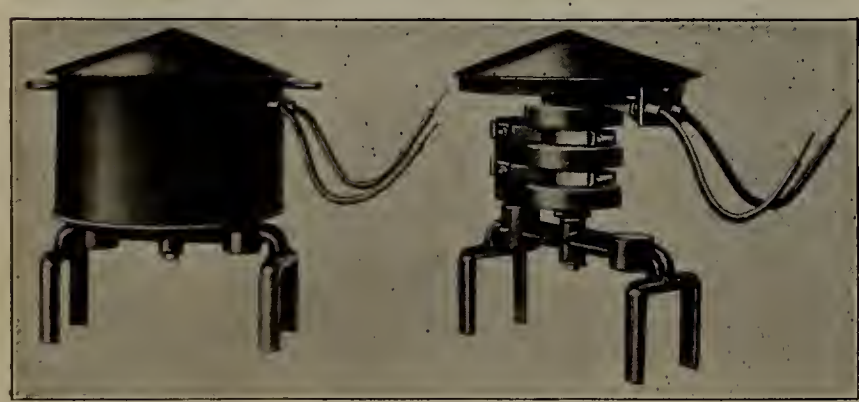

Current Collector for Tractor.

If to the operating expense be added a charge of 12 per cent of the cost of the electric installation, of $180.00 for interest and depreciation, the balance in favor of motor operation is still $1,038.00. In addition, the saving of time and the increased amount of traffic that can be handled in a given period, while difficult to reduce to actual figures, will be of greater importance in a crowded round house than the saving in operating expense. The excellent showing made by the foregoing equipment resulted in the immediate installation of five more tractors of a similar nature and the determination to supersede all hand operated tables by electric tractors at important points on the line operated by this particular company.

NEW REAR END LAMPS.

The Missouri Pacific-Iron Mountain is installing the Fresnel Signal Lamp on the rear end of its trains. This is the same light used aboard ships and on steamboats. It is a long, narrow belt of light and gives a spread of illumination of 45 degrees on either side of a central point, or, a total illumination of 90 degrees. The ordinary signal lamp used on the rear end of trains is the small bullseye, and while the light is bright, it has no spread, throwing out only a thin line of illumination directly back of the train.

The big advantage of the wide spread of light that the Fresnel lens gives is that in rounding a curve it spreads its rays in all directions over the land, so that trains on the other turn of the curve can plainly see it, whereas they cannot observe the light of the ordinary train signal lamp. This fact gives the Fresnel lens a great advantage in the line of safety.

The problem of getting a light that would carry around curves is one on which the railroads have been working for years, because it means so much to them from the standpoint of safety. The Fresnel lens has been worked on by numerous railroads, but there were mechanical problems connected with it that they were unable to overcome. Mr. B. H. Mann, signal engineer of the Missouri Pacific-Iron Mountain, has been working for over a year to overcome these defects and has finally succeeded in perfecting the lamp so that it can be used on railroad trains.

Service tests have been made recently on the Hot Springs Special and on both of the through, fast trains to Texas. These tests have been most satisfactory, and arrangements are now being made to have the Fresnel lens signal lamp to take the place of all other signal lamps on all trains of the system.

EXTERNAL THROTTLE VALVE.

A patent has been granted to W. F. Buck, superintendent of motive power, Atchison, Topeka & Santa Fe Ry., covering what is known as the Buck external throttle valve, which is located outside the locomotive boiler shell and immediately adjacent to the steam chests.

The external throttle valve has a number of advantages. One of these is to secure quick control in starting or stopping a locomotive. Quick control has been almost impossible in the case of locomotives fitted with superheaters when slipping. The Buck throttle valve overcomes this condition and it also has a number of other good points.

While this throttle is designed primarily for use with locomotives equipped with superheaters, it is equally applicable to locomotives using saturated steam, and is suitable for the designs of superheaters arranged for either high or low degree of superheat.

A general view of the throttle, its connections and application in connection with a Buck-Jacobs superheater is shown by the accompanying illustration. The throttle is secured beneath the superheater on the outside of the boiler, communicating with it by means of a hole through the shell. Above the superheater is a connection to a large globe valve, and this, in turn, is connected to the dome by an outside pipe. Short steam pipes lead from the throttle to the cylinder saddle casting. The throttle is operated by a bell crank connected with a reach rod leading to the cab. The details of construction are shown clearly in the sectional view.

In the case of smoke tube superheaters, saturated steam may be led to the superheater header, either by an external pipe from the dome or by the usual inside dry pipe. From the header, superheated steam is led to the throttle by two steam pipes similar to the common form of smokebox steam pipe.

An external throttle valve is, of course, readily accessible at all times for inspection and repairs. This feature, especially in connection with the outside location of steam pipes and connections, introduces a desirable innovation in locomotive practice. It places the joints outside the boiler

shell, where steam leaks may be detected quickly and where repairs may be made conveniently. The joints are removed from the intense heat of the smokebox, that tends to cause leaks, and in the event of a leak the steaming qualities of the locomotive are not affected.

The accessibility of the throttle provides many advantages. While the boiler is under steam pressure the globe valve near the dome may be closed, thus shutting off steam from both the throttle and the superheater. Repairs to these may then be made without the long delay incident to blowing off steam, cooling boiler, removing dome cap, etc.

Should the throttle become disconnected, either open or shut, it is possible to get at it promptly. Temporary repairs may be made at once and the engine can proceed with its train. In case of such an accident, with the usual form of throttle, it would be necessary to kill the engine. Furthermore, there is no stuffing box, gland or packing for throttle rod in cab.—Santa Fe Employes' Magazine.

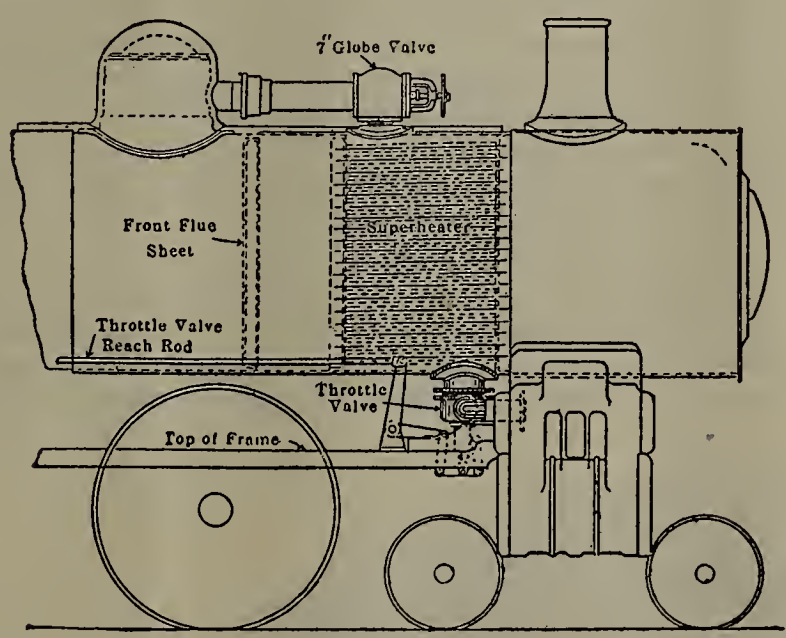

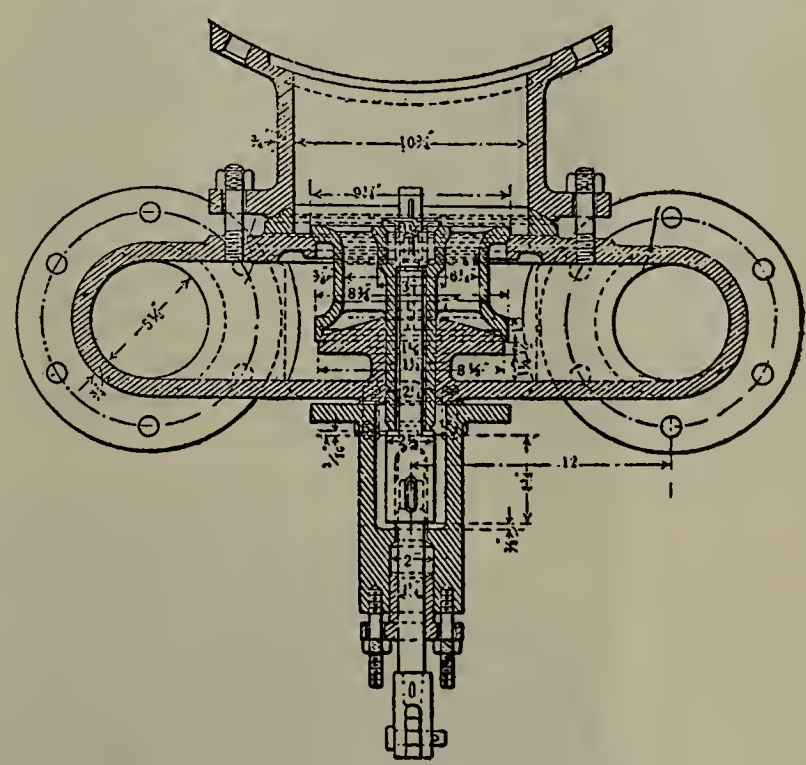

External Throttle as Applied to Locomotive Equipped with Superheater.

ELECTRIC SWITCHING LOCOMOTIVES.

Many unique features are incorporated in the 240-h. p., 30-ton, all-steel electric switching locomotives designed and built by the Terre Haute, Indianapolis & Eastern Traction Co. at its Indianapolis shops, 1120 West Washington street, under the supervision of L. M. Clark, master mechanic for the company. The locomotive is used principally for shifting coal cars and other switching service. The specifications for the locomotive are as follows:

Length over buffers	30 ft.
Length over cab	7 ft. 8 ins.
Width over sheathing	9 ft. 6 ins.
Width over all (grab handle)	10 ft.
Height, trolley base to rail	12 ft. 3½ ins.
Height, undersill to rail	3 ft. 7 ins.
Bolster centers	17 ft. 6 ins.
Total wheel base	22 ft. 4 ins.
Rigid wheel base	4 ft. 10 ins.
Total weight	60,880 lbs.
Body construction	all steel
Underframing	8-ft., 7-lb. I-beams
Body bolsters	10 ins., M. C. B.
Trucks	Standard, 0-50-410
Wheels	34-in. solid steel
Axles	5x4½ in., A. C. and I. R. A.
Journals	4¼x8 ins., M. C. B.
Motors	quadruple, Westinghouse No. 93-A-2
Gear ratio	16-71
Control	Westinghouse HL
Air brakes	Westinghouse AMM
Compressor	Westinghouse D2EG
Brake cylinder	12x12 ins.
Coupler	Rigid M. C. B.
Sanders	Pneumatic
Heaters	Electric
Trolley	U. S. No. 10

"HL" control equipment was selected for the locomotive because of its ability to continuously and reliably handle the large currents incident to shifting heavily loaded cars. With switching locomotives there are, necessarily, frequent applications of the controller to the first and second notches; that is, there is almost a continuous breaking of heavy currents. Because of this, "HL" control is preferable to the K types for such service. A further advantage of "HL" control for locomotive work is that the controller occupies but little space in the usually crowded cab and leaves plenty of room for the operator to step about and look out on all sides.

The switch group for the control and the reverser are mounted under one of the sloping hoods at one end of the cab, while the compressor and other air brake details, with the exception of apparatus that must be available for manipulation, are mounted under the other. The grid resisters for

Interior of Cab, Electric Switching Locomotive.

Electric Switching Locomotive, T. H., I. & E. T. Co.

the control are mounted underneath the car. Small incandescent lamps for illuminating the air gauges in the cab are in circuit with lamps arranged in the hoods. This arrangement facilitates inspection of the equipment.

As is evident from illustrations, the wiring and the arrangement of the apparatus within the cab is very carefully worked out. All of the conductors in the cab are carried in wrought iron conduit and the incandescent lamps for lighting the cab are arranged on condulet outlets. The "HL" controller and the engineer's valve are mounted on a wrought iron support away from the sides of the cab so that the motorman can walk entirely around them.

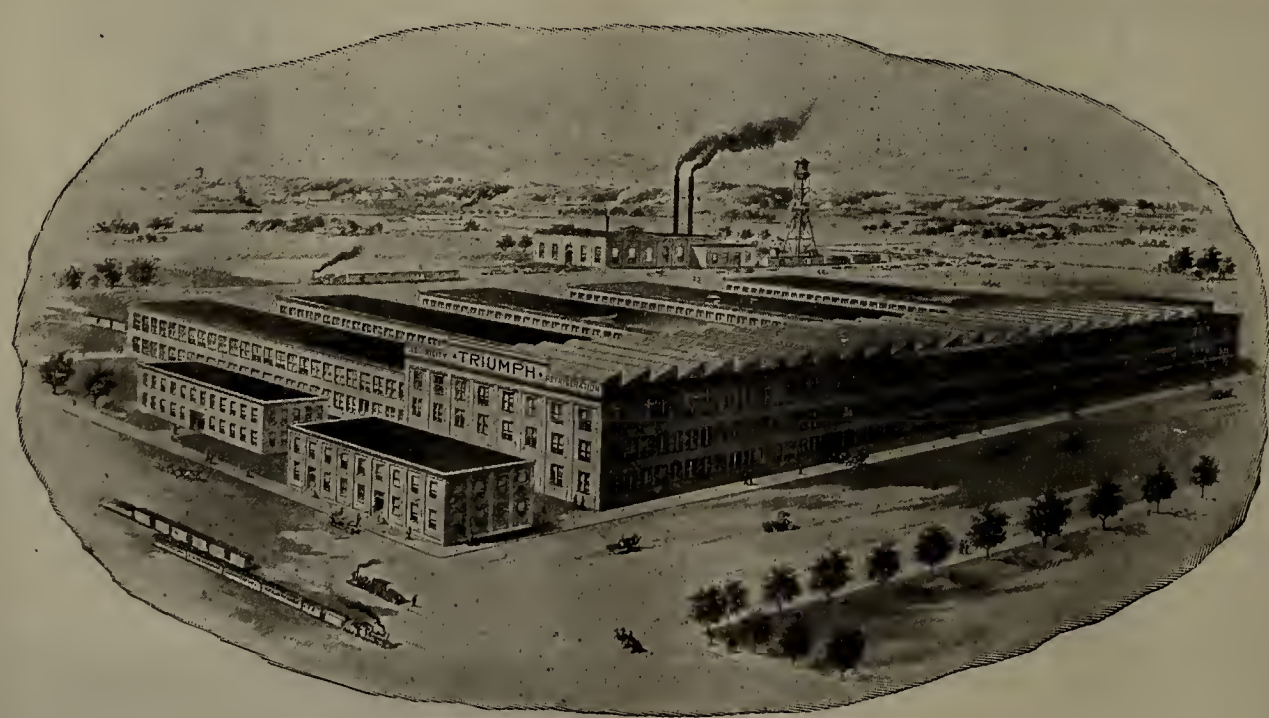

General View, Triumph Electric Co. Plant.

A MODEL MACHINERY PLANT.

The Triumph Electric Ice Machine Co., of Cincinnati, has recently erected and is now occupying its new plant at Oakley, a sub-division of Cincinnati. Before laying out this plant, a careful study was made of other plants and a plant which is model in many respects is the result. The site consists of 8½ acres on the main line of the Baltimore & Ohio and a short distance from the tracks of both the Pennsylvania and the Norfolk & Western. As is usual nowadays, a general plan has been laid out which will admit of additions in the future. The general scheme consists of a main building 500 feet long with ells at right angles 60 feet wide, three stories high and 60 feet apart. All buildings are of steel construction, faced with red brick and provided with the saw-tooth type of roof. About 125,000 square feet of floor space are provided in the buildings now erected. A general plan of the plant is shown in one of the drawings, the heavy lines indicating the buildings already constructed and the dotted lines showing the contemplated future extension. The usual plan of having the raw material enter at one end of the factory, pass through successive steps and arrive at the other end as a finished product, is followed.

In the main building each side bay is provided with a second and third floor gallery, each of which is served by two freight elevators. The third floor gallery on either side overhangs the lower gallery by a distance of six feet and this construction permits material to be lowered or raised to or from the main floor by the overhead traveling crane. It also allows material to be transferred direct from the third floor east bay to the third floor west bay, and in addition it provides some additional 9,000 square feet of floor space.

Each gallery is approximately 40 feet wide and 13 feet high, with the exception of the first floor, which is 14 feet high. All four galleries are supported in the center by a 12-inch box girder in addition to the main columns at the sides. The overhanging construction of the third floor galleries is supported by brackets, as shown. In addition to the four elevators previously mentioned, access is had to the various galleries by means of stairs.

The main floor between the center columns is 60 feet wide and is cemented the entire length and width, forming a solid foundation for the heavy machine tools.

The longitudinal I-section girders for providing the necessary strength for the flooring of the galleries are spaced 5 feet 8½ inches apart and are six in number. The construction is therefore light and at the same time strong. All floors and galleries are well lighted and ventilated by means of side windows, much care having been exercised in this direction, as it is believed that this is a most important point in the construction of any factory building. It has been conclusively demonstrated in many plants that the output per man is greater with a well-ventilated workroom than in a close one, and it is self evident that good work cannot be done with poor light.

The products of the Triumph company consist broadly of two classes, electric light and power machinery on one hand, and refrigerating apparatus on the other. These two divisions, although under one management, have separate operating staffs and work independently of each other. Great care, therefore, had to be exercised in laying out the factory to ensure that each of these departments would be able to carry out its work to the best advantage and at the same time not interefere with the production of the other.

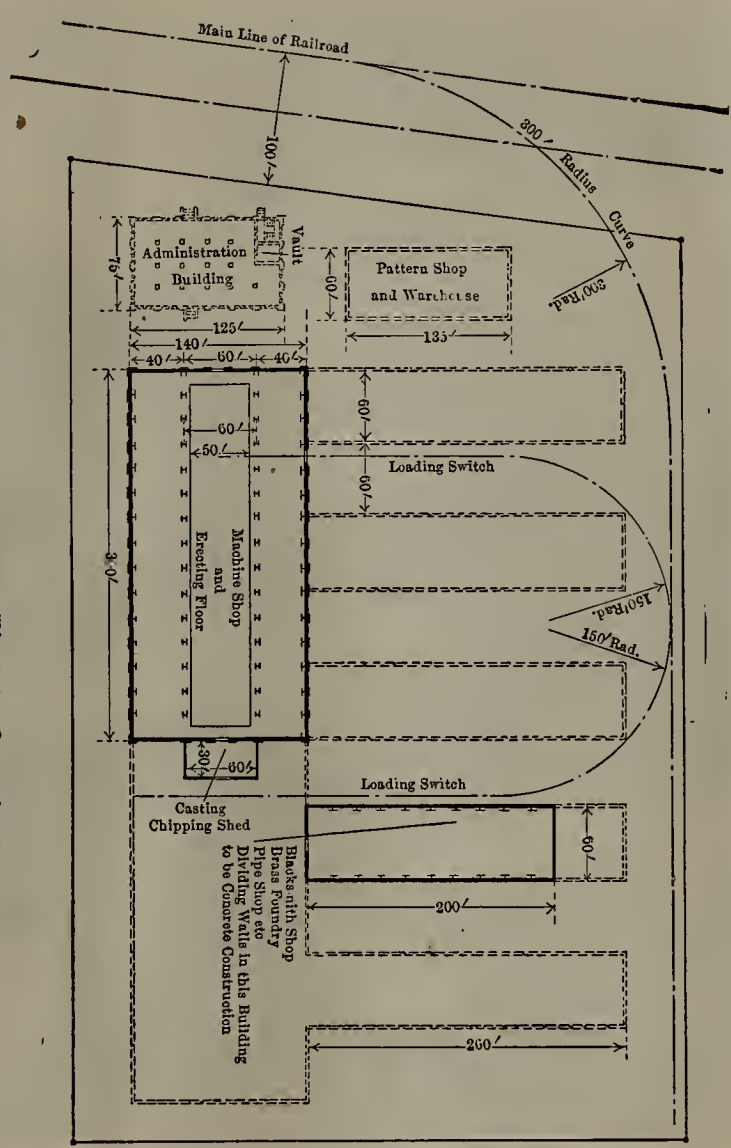

General Plan, Triumph Electric Co. Plant.

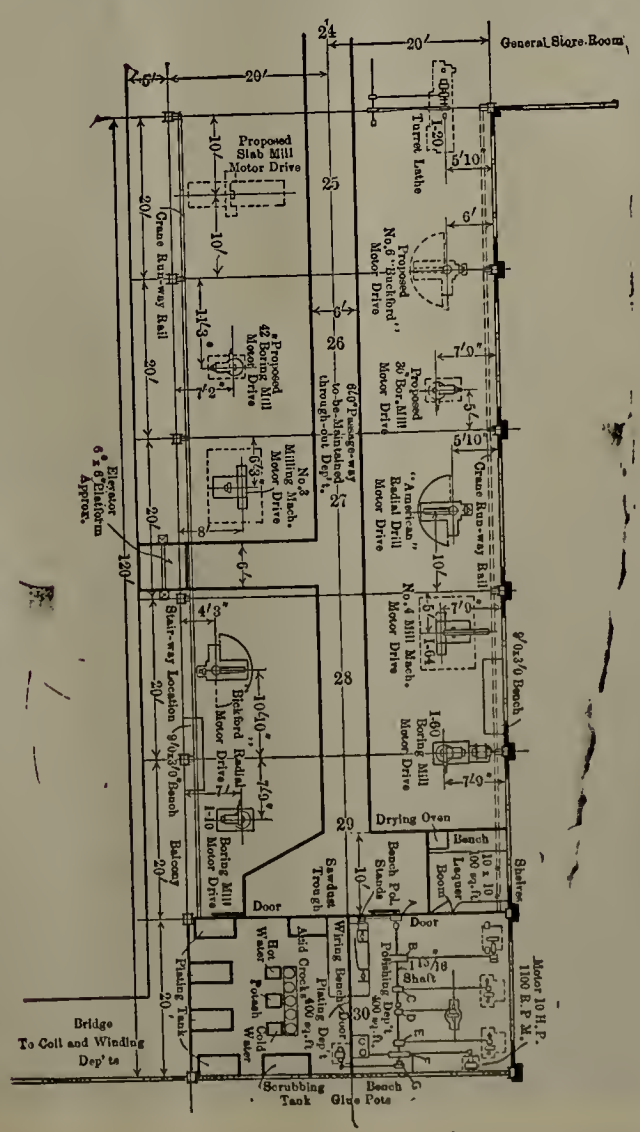

Section of Machine Shop.

The main floor extends the full length of the building and as far as the main columns on either side, covering approximately 48,000 square feet of floor space. In this portion of the building are situated the large planers, boring mills, etc., for both departments. The whole floor is served by a 15-ton motor driven Box crane with a 5-ton auxiliary hoist.

At one end of the building is situated the testing department in close proximity to the outgoing railroad switch. The floor at this point is built up of Z-sections and concrete for convenience in anchoring machines under test. Additional strength is provided by means of ordinary railroad rail embedded in the concrete and placed longitudinally with the Z-sections.

Adjoining the heavy tool department is the platen floor department, containing all heavy portable tools, and is no situated that work can easily be transferred from one department to the other. In factories doing heavy work this is a most important part of the plant, inasmuch as it is often more feasible to bring the tools to the work than to mount large and awkwardly-shaped pieces on permanently placed machine tools.

Outside the main building, but adjoining it, is the chipping shed, which is fitted out with pneumatic tools and sand blasting apparatus of approved pattern. Here also it will be noticed that the situation is such that the minimum amount of handling is required to transfer work from this department to the machine tool department on the main floor.

The first floor of the east bay is devoted to the small apparatus testing department, punch department, assembling department and the present office building. The office arrangement is, however, of a temporary character. A separate administration building has been planned and will be erected in the near future. Its position is clearly indicated in the general plan.

Taking these departments in the order named, it is noticeable that the small testing department is located under the armature department on the third floor and is served directly by an elevator. Here are tested all small direct-current machines and induction motors of small size. Its location is also such that the finished machines can be immediately boxed and shipped without further handling.

In the punch department are some features that appear to be novel, especially with reference to the method of cleaning laminations. The oil which invariably collects on the punchings is generally removed by the application of gasoline, and until recently this has been the means employed by the Triumph company. This method, however, necessitates the storage of a considerable quantity of this inflammable material and greatly adds to the fire hazard.

After experimenting along different lines the Triumph company finally hit upon the following expedient which answers admirably in every particular. It was known that potash has an affinity for lard oil, and working on this basis it was found that by using this oil for lubricating the punch dies and afterwards plunging the laminations into a boiling solution of potash, the oily film was entirely removed and the iron was cleaned even more effectively than had previously been the case when gasoline had been used. A few minutes only is required to effect this result, the laminations being then plunged into another tank of clean boiling water, rinsed and then quickly dried. The beauty of this system is in the rapidity with which the work can be performed, as it is obvious that many laminations can be dipped simultaneously.

Some doubt arising as to the effect of the potash on the iron, exhaustive tests were carried out and proved that no deteriorating effects ensued. In consequence, this method has finally been adopted with excellent results.

Following the work through the shops in the order of production we come to the assembling department immediate

Center Bay of Main Machine Shop, Triumph Electric Co.

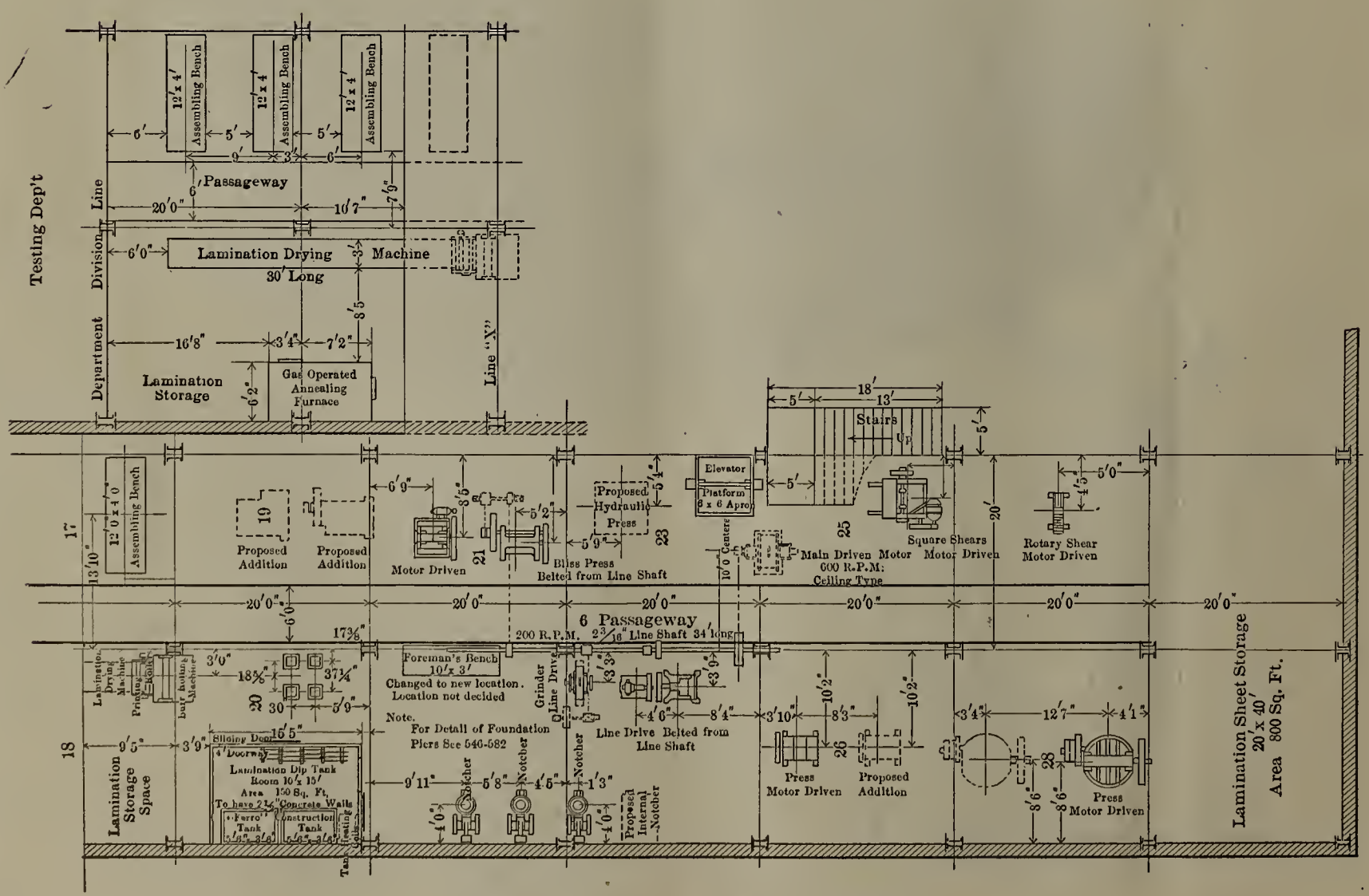

Layout of Punching and Pressing Machinery.

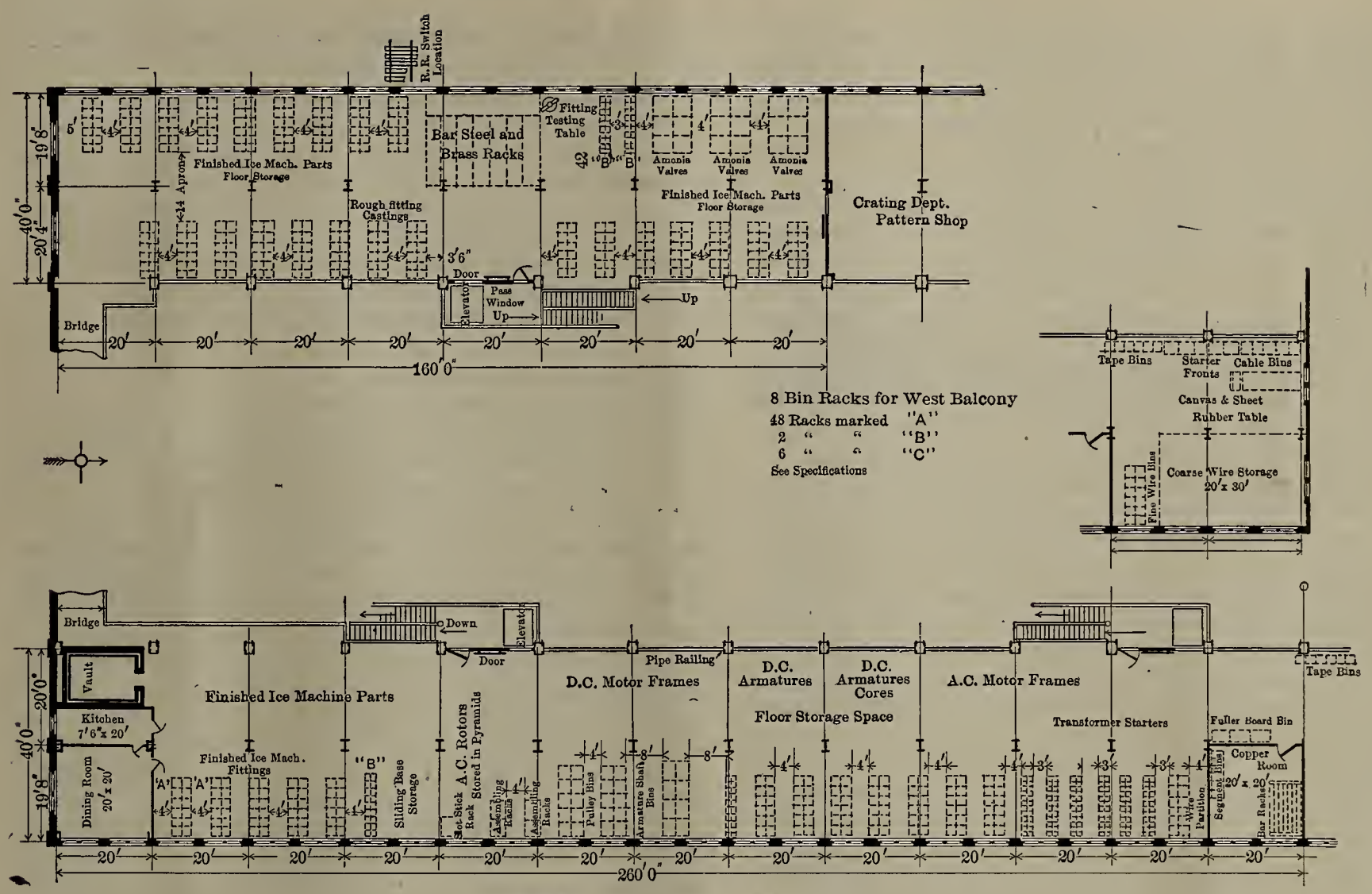

Storerooms, Triumph Electric Co.

Small Tool Department.

ly adjoining the punch department, where the laminations are assembled into cores and are then rady to be transferred either to the stores immediately above on the second floor and there entered as a semi-finished product, or else to the armature winding department immediately above on the third floor.

On the third floor above the stores are located the switchboard department, commutator department and coil winding department, the raw material for each of these sections being contained in the stores below. Here again the proximity of the stores to the departments handling material located therein is apparent.

The shop office, tool room, lathe department, where all refrigerating machine-work is performed, and employes' dining room are all located on the first floor of the west bay. Here also are situated the wash rooms for the use of the men.

The refrigerating machine store room and pattern shop are on the second floor of the west bay. It will be noted that here as well as on the east bay side, the stores are located on the second floor, in this case immediately above the refrigerating machine shop. Following the plan of the east bay, the west bay is also equipped with two elevators, and in addition to third floor is also served by the overhead traveling crane. The third floor on this side is devoted to the polishing department, screw machine department, steel crown department.

The office building is a single unit. In other words, each department, while being entirely separate, is not totally enclosed, divisions being made by handsome brass railings three feet high placed around the various departments. This arrangement undoubtedly provides the best lighting and ventilation. As in the factory, the various sections have been laid out with due regard to space and their relationship to one another. A supply room of ample proportions for storing stationery, literature, etc., is provided at the rear of the building—also toilet facilities of modern type and plenty of conveniences in the shape of coat closets and hat pegs.

In conjunction with three other companies, which are located on adjacent property, a $100,000 power plant has been erected and is now in operation. This plant will supply power, light, heat, water and compressed air to the several factories, and is equipped with Triumph generators of 300 kilowatts capacity, direct-connected to Hamilton Corliss, cross-compound engines. The power and light cables are run underground to the point of distribution, as is also the hot water for heating the various buildings, and compressed air at 90 pounds per square inch pressure for driving the pneumatic chipping tools. Every building is equipped with automatic sprinklers, water at 100 pounds per square inch pressure being supplied for them.

The feeling of co-operation between the men and the company is fostered and promoted by the management by a system of weekly meetings, at which the heads of all departments are present. These committees are five in number and may be classified as under

(1) General Committee.
(2) Electrical Design Committee.
(3) Ice Machine Committee.
(4) Sales Committee.
(5) Foreman's Committee.

Each meeting is presided over by the general manager and minutes are carefully kept and read.

Situated in the open country and with trimly kept lawns surrounding the various buildings, the new plant of the Triumph company is a good example of modern factory construction.

J. F. Deems, general superintendent of motive power, rolling stock and machinery, New York Central Lines, has resigned to become president of the Ward Equipment Company, New York, with office in that city.

SOME ADVANTAGES OF VARIABLE SPEED MOTOR DRIVE.

To successfully operate the majority of machine tools, a motor having a wide range of speed is desirable. In order to meet this demand, the Triumph Electric Co., of Cincinnati, Ohio, has developed a line of adjustable speed commutation pole motors shown in the accompanying illustration.

These motors possess the following special features which render them particularly suitable for machine tool operation.

(1) Wide adjustment of speed.
(2) Constant speed maintained at any given speed.
(3) Constant output at any speed.
(4) Heavy overload capacity.
(5) Sparkless commutation at any load.
(6) Motors will operate without sparking at any speed or load within capacity of the motor and in either direction of rotation without shifting the brushes.

The construction is very similar to that of the Triumph constant speed motors, with the exception that commutation poles are placed midway between the main field poles, and are firmly bolted to the field yoke. These poles are formed of the best quality wrought iron and are carefully wound and insulated.

The coils are in series with the armature circuit, so that the strength of these poles depends upon the load on the motor, and is therefore proportional to the armature reaction. This is true irrespective of the direction of rotation, so that the points of commutation are always in a field of such magnetic strength that sparkless commutation at all loads and all speed variations is obtained. This method of construction permits heavy overloads to be carried with ease and safety.

Sparking is primarily due to self-induction in the armature. In other words, the current flowing in a short circuited coil as it passes under a brush is reversed, passing from the maximum in one direction to the maximum in the opposite direction. This varying current generates in the coil an electromotive force tending to maintain this varying current, the effect of which is to produce sparking. Further, the current in the armature coils tends to produce a magnetic field in the vicinity of the pole corners, viz., in the region of the coils that are being short-circuited. These lines of force are cut by the armature coils as they rotate, and an E. M. F. is generated in them. This E. M. F. is in such a direction that it tends to maintain the current flowing in the coil. This effect is known as armature reaction, and is another prolific cause of sparking.

In a constant speed motor these two conditions are overcome partly by what is termed brush contact resistance, and partly by shifting the points of commutation, so that the short-circuited coil is at the edge of the magnetic field. When placed in this manner, the E. M. F. generated aids in the reversal of the current.

In order to obtain the necessary high speeds with variable speed motors, a reduction of the field strength is necessary, and is therefore no longer available for overcoming the magnetic field of the armature. In addition to which the increased speed of the armature proportionally increases the maintaining E. M. F., which assumes such proportions that the carbon brush cannot overcome it.

The increased speed also increases the amount of self-induction in the armature. It will therefore be seen that destructive sparking would take place with this type of motor, when running at the higher speeds, unless some means were employed to overcome the self-induction and armature reaction.

In order to successfully meet these conditions, it is necessary to provide an independent magnetic field by introducing commutation poles, located between the main poles and wound with coils in series with the armature. It is obvious now that any increased load will not weaken the field of commutation, since the coils on the commutation poles are in series with the armature. Moreover the commutation poles produce a commutating field independently of the main field and irrespec-

tive of the direction of rotation, since a reversal of armature current will also cause a reversal of current in the commutation poles. The effect therefore of the commutation pole is to eliminate sparking by removing its cause.

The sparkless operation of these motors insures long life for the commutator, smooth running for the motor, and less wear and tear on the brushes.

The advantages of the commutation pole type of motor are many, and include in addition to the above:

(1) Less heating generated in the commutator.
(2) Higher efficiency, due to the lower iron and commutator losses.
(3) Due to the sparkless commutation, less carbon and copper dust is deposited on the motor, which is therefore cleaner and less liable to burn-outs.

The flat type starting and regulating rheostat is arranged with armature resistance for starting duty only and field resistance for speed variation. This type of controller is recommended for service where the operator is within reach of the controlling handle, the speed regulation being obtained entirely by means of shunt field control.

The drum type controller operates with armature resistance for starting duty only, but has a large number of field steps, so that a wide range of speed may be secured by varying the field strength of the motor. These controllers are made in either reversible or non-reversible styles.

The advantages of individual motor drive are more and more being recognized every day. Increased output is obtained by using a variable speed motor, as the proper cutting speed can then be applied to every class of work, resulting also in an improvement in the quality of the work.

Generally speaking, the amount of power wasted in driving line and counter shafts averages from 30 to 50 per cent. With the use of the individual motor drive this waste of power is entirely eliminated. Each machine will draw power from the line only when in actual operation.

The use of a direct drive also permits each machine to be placed just where it is wanted, resulting in an increased output, due to the added facility of handling the work thus obtained. This arrangement also permits the location of tools to be changed at will without the necessity of considering the layout of any line shafting. Additional tools may be readily added from time to time.

In most modern machine shops, all tools, especially those of the larger sizes, are served by an overhead traveling crane. The use of the individual motor drive, with its entire freedom from overhead shafting, hangers and belts, greatly simplifies this work.

And finally, the entire absence of overhead shafting, moving belts, etc., greatly adds to the cleanliness of any factory.

Increased light and freedom from grease and dust bears directly upon the output per man, increasing the quality and quantity of his work.

Triumph Vanable Speed Motor.

New Books

THE APPLICATION OF HIGHLY SUPERHEATED STEAM TO LOCOMOTIVES, by Robert Garbe; edited by Leslie S. Robertson; 70 pages, cloth, 6x9½; published by the Norman W. Henley Publishing Co., 143 Nassau St., New York City. Price $2.50.

The daily increasing use of superheated steam in locomotive service and the corresponding necessity for information give unusual importance to this. Practical Treatise on the Subject. It is fully illustrated and specially prepared for the use of all interested in the application of superheated steam to locomotives. The book contains chapters on: Generation of Highly Superheated Steam, Superheated Steam and the Two-Cylinder Simple Engine, Compounding and Superheating, Designs of Locomotive Superheaters, Constructive Details of Locomotives Using Highly Superheated Steam, Experimental and Working Results with Superheated Steam Locomotives. The author writes from his experience in Germany and with reference particularly to results obtained in the Prussian State Railways, American mechanical engineers have recognized the fact that the Germans are still far in the lead in this work and that for information as to best practice a study of their methods is productive of best results. This book is an excellent means to that end.

* * *

ELECTRIC TRACTION FOR RAILWAY TRAINS. By Edward P. Burch; 583 pages, 6x9; published by the McGraw-Hill Book Co., 239 West 39th St., New York. Price $5.00.

The publication of this book is peculiarly timely in that there is a demand for knowledge on the subject of electrification heretofore to be found only in railway club papers or from miscellaneous and more or less unreliable sources. The book is well illustrated and is perhaps best described in the words of the author as follows:

"A development in electric traction for railway trains is in progress, the extent of which is scarcely realized except by those engaged in electric railway engineering. The work of electrification now completed by four large steam railroads, the New York Central, the New York, New Haven & Hartford, the Long Island, and the Pennsylvania, at their New York terminals and by the Great Northern Railway and the Sopkane and Inland Empire Railroad in the state of Washington, presents notable examples of this application of electric motive power. It has led other important railway companies in this country to consider the advantages of electric power, both for old steam roads and for all new railways.

"The opportunity which has been given railroads to utilize the advantages of electric motive power has already resulted in a remarkable growth. No more striking display of progress in electrical engineering can be obtained than that shown in the illustrations of the various types of electric transportation equipment built since 1906. Equipment has been strengthened commensurate with the needs; details of design and control have been perfected; manufacture, maintenance, and inspection have been simplified, until the motive power of electric trains now presents no serious difficulties in modern railroad operation.

"No publication relating particularly to the subject of electric traction for railway trains has appeared in America, because the men who were qualified by experience and knowledge to write have not found time, or have been prevented by businss reasons. In the writer's opinion such a work is needed, and this book has been published in the hope that it may meet this need. It is not, however, intended as a popular treatise upon the subject, for it is assumed that the reader has a good knowledge of steam and electric railway practice.

"The material has been systematically collected since the year 1900, which marked the close of seven years' service as electrical engineer for the Twin City Rapid Transit Company, operating the electric railways and long interurban lines in and near Minneapolis and St. Paul. This was followed by much valuable experience on steam locomotive tests and on dynamometer cars, and later in electrification plans for several steam roads. Electrification work throughout the country has been inspected and studied for use in consulting practice, the data thus collected being used as a basis for the material contained in the book. Viewpoints have been obtained from many sides and angles. Ideals of steam railroad officials, of superintendents of motive power, of steam and electric locomotive enginemen, of manufacturers, and of skeptical bankers have been weighed, and sifted. Facts, comparisons, descriptions, statistical tables, leading opinions, results in operation, and references to the best current literature have been collected to constitute a book of reference for engineers. Manifestly all of the material and tables could not be presented, but special effort has been made to avoid passing judgment or stating conclusions without presenting the important issues and sometimes the details of the case.

"In the use of the work as a text-book, emphasis should be given to a study of statistical tables to bring out conclusions. when, in consideration of the present status of electric railway transportation, it is possible to do so. Classification in itself is not valuable and stress should be laid on the function of the relations of the elements involved. The limitations on practical electrification must be observed to get good foundations for a study of economic problems and efficient methods of train operation. Technical reports by students on the relative merits of mechanical connections, electric systems, train equipment, on methods of development, and on economies of train operation will bring out good results if they are criticised, revised, and discussed pro and con, by the students themselves.

"The book is further intended as a guide for those who desire to follow the development and practical application of electric traction on American trunk-line railroads. . The history and present status are carefully outlined to give a preliminary survey and in general the subjects are treated from the view point of steam railroad men who desire to study electric motive power. Data on cars, trucks, power station design, substation practice, manufacturer's data, wiring diagrams, etc., are not presented. Electric traction for street railways is not considered, and details of interurban railways which do not run cars in trains are omitted. The subject has been limited, as the title indicates, to electric traction for railway trains."

Personals

R. D. Malloy succeeds Edward Wees as general foreman of the Pere Marquette at Frankfort, Mich.

T. F. Dreyfus has been appointed master mechanic of the Baltimore & Ohio, with office at Benwood, W. Va. He succeeds D. H. Speakman.

H. H. Hale has been appointed superintendent of motive power of the Cincinnati, Hamilton & Dayton at Cincinnati, Ohio, succeeding W. L. Kellogg, who has been appointed to a similar position on the Pere Marquette at Detroit, Mich. F. C. Pickard has been transferred from the Cincinnati, Hamilton & Dayton to the latter road, as master mechanic at Saginaw, Mich.

W. H. Donley succeeds F. G. Colwell as master mechanic of the Illinois Central at East St. Louis, Ill.

R. N. Hemming has been appointed superintendent of motive power of the Indiana Union Traction Co., vice Walter M. Evans. Office at Anderson, Ind.

E. O. Llano has been appointed superintendent of the Nacozari R. R., with office at Nacozari, Sonora, Mexico.

H. A. Uhler succeeds W. C. Greenstreet as road foreman of engines on the National Railways of Mexico. His office is at Monterey, N. L., Mexico.

A. S. Howe has been appointed superintendent of motive power of the Nevada-California-Oregon Ry., to succeed W. D. Gardner. His office is at Reno, Nevada.

H. Rhoads succeeds G. H. Matthews as master mechanic of the New Orleans, Texas & Mexico and the Orange & Northwestern, with office at De Quincy, La.

A. W. Munster has been appointed engineer of tests of the New York, New Haven & Hartford, filling the position recently

W. P. Hobson, S. M. P., Ches. & Ohio.

H. H. Hale, S. M. P., C. H. & D.

W. L. Kellogg, S. M. P., Pere Marquette.

vacated by the promotion of B. S. Hinckley. Office at Boston, Mass.

The Ohio River and Columbus Ry. has leased the Cincinnati, Georgetown & Portsmouth and the Felicity & Bethel, all of which will be operated independently. Robert B. Hackney is the newly elected president of the organization, with office at Cincinnati.

W. T. Kuhn has been appointed master mechanic of the Toronto, Hamilton & Buffalo at Hamilton, Ont.

F. A. Keiser succeeds H. L. Walther as superintendent of the Yreka R. R. at Yreka, Cal.

John Burns has been appointed master mechanic of the Eastern division of the Canadian Pacific, vice J. B. Elliott, retired. The office is at Montreal, Que.

James W. Gibbs succeeds R. G. Cox as master mechanic of the Virginia & Southwestern, with office at Bristol, Tenn.

Joseph Quigley has been appointed master mechanic of the Cincinnati, New Orleans & Texas Pacific, vice T. O. Sechrist, resigned, with office at Ferguson, Ky. H. B. Hayes succeeds Mr. Quigley as master mechanic of the Alabama Great Southern at Birmingham, Ala.

W. R. Duff has been appointed master car builder of the International & Great Northern at Palestine, Texas. Mr. Duff was formerly general car foreman of the Trinity & Brazos Valley.

R. E. French succeeds S. C. Honea as master mechanic of the Liberty-White R. R. at McComb City, Miss.

Charles D. Young has been promoted from assistant engineer of motive power of the Pennsylvania Lines West to engineer of tests of the Pennsylvania, with office at Altoona, Pa. He succeeds E. D. Nelson. Mr. Young was born May 19, 1878, at Washington, D. C., obtained his education at the Washington public schools and Cornell university and entered the service of the Pennsylvania Lines West in 1900 as a special apprentice. In March, 1903, he was made assistant roundhouse foreman at Columbus, O., and during the year 1904 was chief computer at the locomotive testing plant at the St. Louis fair. After this he was appointed motive power inspector and later master mechanic at Ft. Wayne, Ind. In October, 1906, he was appointed assistant engineer of motive power, which position he held until his recent appointment.

W. P. Hobson has been appointed superintendent of motive power of the Chesapeake & Ohio, with office at Covington, Ky. Mr. Hobson was born in Goochland county, Va., June 29, 1869, and received his education in the public and private schools of Virginia. He began his railroad work Sept. 1st, 1886, as machinist apprentice in the shops of the Chesapeake & Ohio at Huntington, W. Va., and later went to Hinton, W. Va., as machinist. In April, 1891, he was promoted to night roundhouse foreman. Ten years later he was promoted to general roundhouse foreman at Clifton Forge, Va., and in about three months was made assistant master mechanic of the Huntington division of the Chesapeake & Ohio, with headquarters at Hinton, W. Va. In December, 1904, he was appointed master mechanic at Lexington, Ky., and on May 1st, 1910, was transferred to Covington, where he remained until his present appointment.

Among The Manufacturers

NEW AIR BRUSH.

A new mechanical device for applying paints, designed to supersede the hair brush, is made by the F. J. Lederer Co., 400 Guilford St., Buffalo, N. Y.

As far back as the time of cave men, paint was applied by using a stick with bristles fastened at one end, and so for centuries men used this tool with little improvement. But the twentieth century has brought the air brush, and it has come to stay.

The air brush is a small automatic hand device used to apply paint. It is operated with compressed air, and applies paint in an atomized or spray form. Although the fine spray is like vapor, the compressed air forces the paint into the grain of wood and into its crevices difficult to reach with a hair brush. It is adaptable for paint, lacquer, liquid bronze, enamel, japan, varnish, etc.

It has been stated that one man can paint as many articles with the air brush, as four or five men can paint with a hair brush in the same space of time and that black paint can be covered with white paint, using only one coat and without showing streaks. Owing to the fact that the operation of the air brush was not fully understood failures have resulted in the past. The above mentioned company is prepared to send representatives for demonstration of the "Buffalo" air brush.

AUTOMATIC SWIVEL VISE.

The Rock Island Mfg. Co., Rock Island, Ill., is the manufacturer of a very efficient swivel vise. This company operates its own foundry and is able to get its alloys cast more satisfactorily for this reason.

The vise, which is illustrated herewith, has a screw and handle of cold rolled steel, nut of malleable iron, and jaws of crucible tool steel. When the work is fastened in this vise, its rotation is stopped automatically and positively.

The company manufactures all classes of vises and has a neat

Rock Island Automatic Swivel Vise.

souvenir consisting of a miniature vise, which will be sent to any railway mechanical official who sends a request. This little vise is extremely useful for very small work.

AN EFFICIENT CRUDE OIL ENGINE.

The Atlas Engine Works of Indianapolis, Ind., has recently produced a crude oil engine which, in recently conducted tests, shows results in efficiency well termed remarkable. This engine is of the Diesel type and depends for its internal combustion simply upon the heat generated by compression within the cylinders. It requires no ignition system, carburetor, fuel mixer or heating device. The fuel used is the cheapest of crude oil, which contains about 19,000 B. t. u. per pound. On the basis of 2 cents per gallon for the fuel, adding the cost of operating engineer and supplies, and then figuring liberally for interest and depreciation, the cost of current produced by this engine is said to be less than 1 per cent K. W. H.

It may be noted from the table that while the thermal and absolute efficiencies of the Atlas engine are high as com-

pared to high class steam engines, the intermediate or mechanical efficiency of 80% at full load, when considered alone, seems low. The seemingly excessive drop in power between the cylinders and the shaft is explained by the fact that engines of this type use part of the power developed in the cylinders for the compression of air to atomize, inject, ignite and burn the fuel oil; in other words, to get the fuel into suitable form and insure the conditions necessary for perfect combustion, and when reckoning the net power output of each engine, the energy used to drive the air compressor is deducted.

Cycle of Operation.

The engine works on the four-stroke cycle. On the first downward stroke of the piston, pure air only (and not an explosive mixture) is drawn into the cylinder. On the first upward stroke this air is compressed into a small clearance space between the piston and the cylinder head. No combustible mixture exists in the cylinder during this stroke and premature ignition, or back-firing, is impossible.

The compression of the air to 500 lbs. pressure raises its temperature to about 1,000 degrees Fahrenheit, sufficient to ignite the small amount and finely divided spray of oil which thoroughly mixed with a jet of air at abopt 900 lbs. pressure, is gradually introduced through a small nozzle during about one-tenth of the second downward stroke, at such a rate that the temperature and pressure during the combustion period remain practically constant. Upon entering the hot air in the cylinder this spray of fuel-oil, every globule surrounded by the air which atomizes it, burns steadily as fast as it is injected into the cylinder. About one-half of a cubic inch of oil (less than a thimbleful) is burned in each 21x30 inch cylinder during each working stroke, the exact quantity being regulated in proportion to the load by a simple pump, the delivery of which is directly controlled by a powerful and sensitive governor. After the fuel valve closes, the gases work expansively and the terminal pressure is but slightly in excess of that of the atmosphere.

At the end of each working stroke the exhaust valve opens and the products of combustion are expelled on the second upward stroke, thus completing the cycle, which repeats itself in each cylinder during every two revolutions. The engine stokes itself, the pump delivering exactly the amount of fuel required during each working stroke. It is more independent of attendance than any other prime mover, and automatically adapts itself to all changing conditions.

Starting.

With each engine, or series of companion engines, is furnished eight heavy steel bottles or storage reservoirs charged with compressed air at about 60 atmospheres or 900 pounds pressure. These air bottles are arranged in two sections, with a cut-off valve for each bottle and another separating each group of four bottles. The manipulation of a starting lever opens a valve which admits sufficient air from one section of the bottles to drive the piston of one cylinder during the first few revolutions, the heat generated by the compression of air in the other cylinder or cylinders meanwhile igniting the oil that has been injected, after which the starting lever is thrown out of commission, closing the air valve, the cams operating the fuel admission valves coming into play simultaneously. The engine is ready for full load in less than a minute after the initial movement of the starting lever.

The air from one section of the bottles is sufficient to start the engine at any time, under any condition, the other section being held in reserve. A three-stage compression pump automatically and continuously charges and recharges the bottles, which in turn supply the jets of air by which fuel oil is regularly injected into the cylinders of the engine.

Date of Run	6-21-11	6-20-11	6-20-11	6-19-11	6-21-11	6-20-11	6-21-11
Duration of Test in Hours	1	1.5	3	2	2.5	4	1
Load in K.W. Hours by Switch Board Meter	67	83.3	132.	173.5	200.4	205.75	249.
K.W. to Compressor by Watt Meter	24 75	22.66	23.6	25.5	29.6	29.25	31.
Transmission Losses to Compressor 23.6%	5.84	5.34	5.5	6.	6.98	6.91	7.31
Net K.W. Used by Compressor	18.91	17.32	18.1	19.5	22.62	22.35	23.69
B.H.P. Used by Compressor	25.32	23.20	24.25	26.13	30.31	29.94	31.74
Net K.W. Delivered to Line	48.09	65.98	113.9	154.	177.78	183.4	225.31
Net E.H.P	64.44	88.41	152.62	206.36	238.22	245.75	301.91
Generator Eff % Manufacturers Rating	87.	88.	89.	90.	91.	91.3	91.
Net B.H.P.	**74.**	**100.4**	**171.4**	**229.2**	**261.7**	**269.4**	**331.7**
Rev. of Engine per Min	**174.7**	**174.1**	**173.13**	**173.1**	**172.9**	**171.9**	**171.**
Fuel Oil Used Lbs. per Hr	50.	61.3	81.	108.	120.4	128.	167.
Pounds Oil per K.W. Hour	1.04	.93	.71	.7	.68	.7	.74
Gal. Oil per 100 K.W. Hours	14.22	12.73	9.73	9.6	9.27	9.55	10.15
Pounds of Oil per B.H.P. Hour	67	61	.472	.47	46	.476	.503
Gal of Oil per 100 B.H.P. Hours	9.18	8.36	6.47	6.44	6.3	6.51	6.9
B.T.U. per B.H.P. Hour	12829.	11680.	9038.	9000.	8808.	9115.	9632.
Thermal Efficiency of Engine $\frac{2545}{\text{B.T.U. per B.H.P.}}$	19.8	21 7	28.15	28.27	28.9	28.	26.4
Fuel Cost of 100 K.W. Hrs in Cts. Oil at 2 Cents per Gal.	28.44	25.46	19 46	19.2	18.54	19.1	20.3

Summary of Tests by C.E. Sargent-M.E.
Atlas Oil Engine
300 B.H.P.

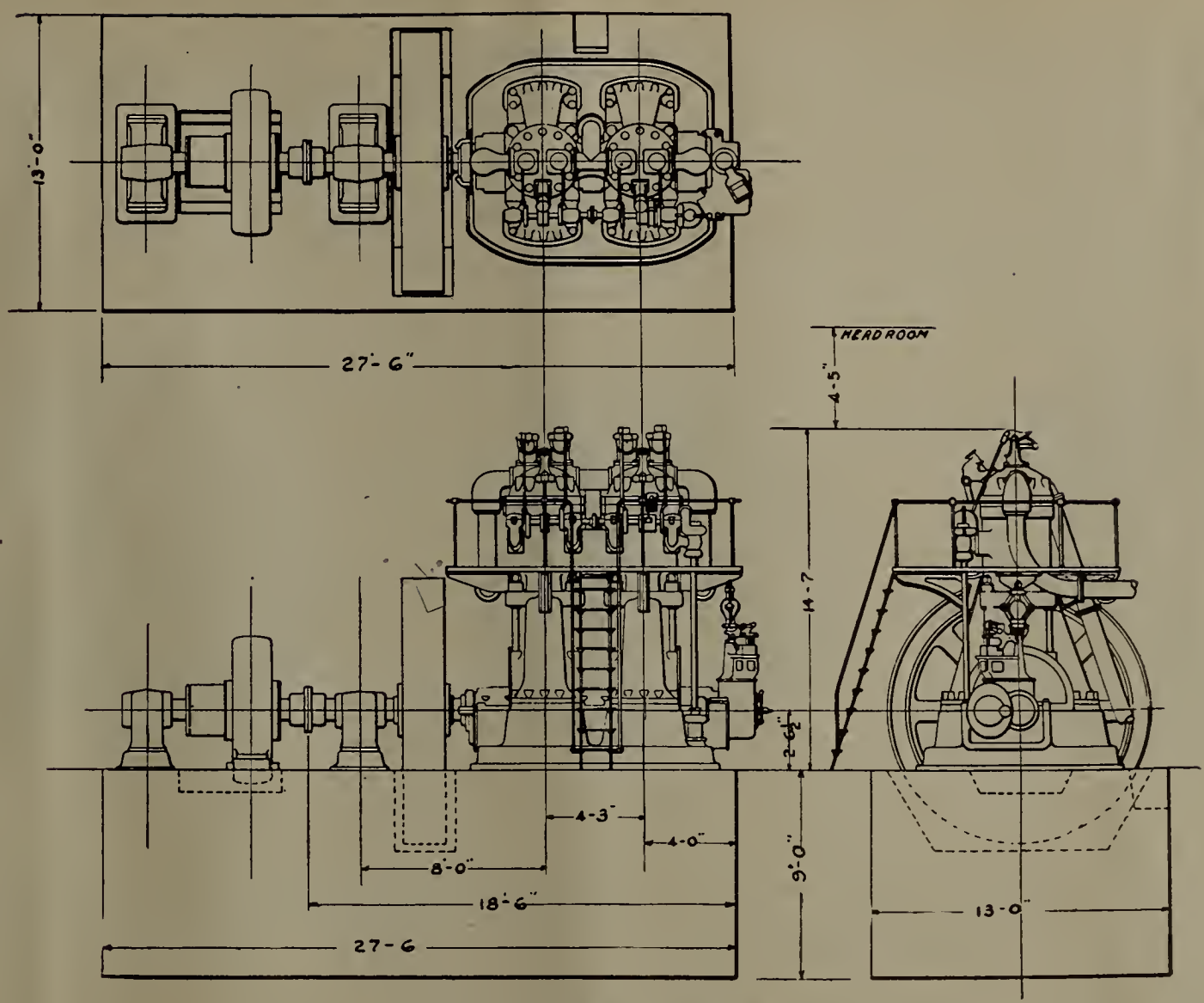

300-H. P. Atlas Oil Engine.

Regulation.

The governor is driven directly from the main shaft. There are no intermediate gears. The mechanism is not subject to shocks due to the valve gear. The entire mechanism is finely graduated so that less than one-half of a cubic inch of fuel oil is injected on any working stroke when full load is on, and smaller amounts to suit momentary load conditions.

The fuel injection pump is of the two-stage type. The first stage is directly controlled by the governor and serves to measure, at the last instant before the beginning of each working stroke, the exact quantity of oil that is to be admitted. This governing stage operates against pressure not in excess of the atmosphere and is sufficiently sensitive in action to perform its important functions with the necessary quickness and accuracy.

Portable Electric Drill, U. S. Electric Tool Co.

PORTABLE ELECTRIC DRILL.

The drill herewith illustrated is made to operate by attaching the lamp cord to any ordinary incandescent lamp socket. The motors are wound for direct or alternating current. The electric drills are considered to be very handy tools on account of the fact that they can be attached to any lamp socket and can be taken any place about the shop for use. An advantage of the electric drill, especially in the winter time, i that it will not freeze up. The cost of operating an electri drill compared to air drills will run, it is said, about fifty per cent in favor of the electric drills.

These electric drills are made in various sizes to drill up to a 2-inch hole in metal. A small electric drill for drilling out tell-tale holes in stay bolts is made by the same manufacturer. The advantage of electric drills on this class of work is that there is no vibration, consequently, the electric drill will not break twist drills.

A great many railways have ordered these electric drills for this class of work. The tool is manufactured by The United States Electrical Tool Company, Cincinnati, Ohio.

New Literature

The Nickel-Chrome Chilled Car Wheel Co., of Pittsburgh, Pa., has issued a diagram showing wear of tread on its wheels after a 60,000 mileage. There were no broken flanges or brake beams in a 70,000 mileage.

* * *

The Steel Car Forge Co., of Pittsburgh, Pa., has recently issued a catalogue illustrating and describing the various materials it manufactures such as the new "safety appliance" forgings and standard freight car forgings.

The Smooth-On instruction book No. 10 contains about 90 pages of instructive matter concerning the use of their iron cement for varied purposes. The Smooth-On Mfg. Co., of Jersey City, N. J., has also issued a leaflet on the merits of Smooth-On gaskets.

* * *

Two recent circulars of the Gold Car Heating & Lighting Co., of New York, describe the Cyclone ventilator, and a new electric heater which is designed to give a maximum amount of ventilation through its coils.

* * *

The Garland Nut & Rivet Co., West Pittsburgh, Pa., has recently issued a booklet entitled "Concerning Nuts and Rivets." It is easy to read and shows many of the points of superiority of Garland products.

* * *

The Hisey-Wolf Machine Co., of Cincinnati, has catalogue No. 8 ready for distribution. It shows a complete line of portable electric machine tools consisting of electric grinders for every class of work, buffers, polishers and electric hand and breast heavy duty radial drills.

* * *

The Allis-Chalmers Co., of Milwaukee, has recently issued three bulletins in its usual style. These are respectively entitled "Direct Current Motor and Generators, Type K," "Direct Current Motor and Generators, Types H and HL," and "Direct Connected Corliss Engines, Reliance Pattern."

* * *

Descriptive leaflet No. 2378, covering rotary converters for railway service, has just been issued by the Westinghouse Electric and Manufacturing Company. This is a four page leaflet, and contains a number of illustrations describing the various parts of rotary converters, such as armature coils, spider, equalizer connections, collector rings, commutator brush riggings, etc.

* * *

The Garvin Machine Co., of New York City, has issued a number of leaflets and circulars covering cutter and surface grinders, milling machines and rapid screw slotting machines.

* * *

Two bulletins on air compressors have been issued by the Ingersoll-Rand Co., of New York, Form 3109, consists of twelve pages in description of class NF-1 steam driven, single stage, straight line compressors, and bulletin 3007 takes up "P B" power driven compressors of the duplex type. Both bulletins give detailed views of the machine.

* * *

The Eagle White Lead Co., of Cincinnati, O., has just issued the "Ewlco" pocket book. It is of convenient size for the hip pocket, has a very neat cover of near leather, and contains considerable information regarding the various properties of metals; also shop hints on handling babbitt, information regarding friction and coefficients of friction, and a number of ruled pages for jotting down notes.

* * *

The R. K. LeBlond Machine Tool Co., of Cincinnati, is sending out its latest catalogue on lathes. This catalogue is a model in many respects. It is 6x9 in. and has embossed covers of dark green stock. Descriptions and dimensions are arranged logically, all the machines are well illustrated, and anyone interested can locate the lathe he is looking for with a minimum amount of trouble. The catalogue is representative of LeBlond products.

* * *

The "Shape Book" of the Carnegie Steel Co., Pittsburgh, contains profiles, tables and data appertaining to the various structural shapes made by its mills. It supersedes a similar book issued in 1903, together with all supplements. It is 5x7 in., bound in a neat flexible cover and should prove very useful to those who are interested.

Industrial Notes

E. A. Johnson, eastern sales manager for the Duff Manufacturing Co. at New York, has been appointed general sales manager with headquarters at the general offices, Pittsburgh, Pa. C. A. Methessal has been appointed eastern salesmanager with office at 30 Church St., New York, succeeding Mr. Johnson.

The Industrial Iron Works, Bay City, Mich., will erect a machine shop, 125-ft. x 350-ft. in area, which will cost about $200,000.

The Louisville Steel & Iron Co. has been organized with a capital of $400,000 to take over the Louisville Belt & Iron Co., of Louisville, Ky. The general offices will be located at Indianapolis, Ind.

Announcement has been made of the division of the Block-Pollak Iron Co., with branches in Chicago, Cincinnati and St. Louis, into two separate concerns. A new company, to be known as the Hyman-Michaels Co. and capitalized at $225,000 has been formed, and will represent the Block interests in Chicago, St. Louis and other branch offices with the exception of Cincinnati. The Pollak interests will have charge of all the property of the old company in the latter city, and will be known as the Pollak Steel Co.

The Chicago Steel Foundry Co. has purchased twenty-three lots, between Thirty-seventh street and Thirty-seventh place, Kedzie avenue and the Chicago & Alton R. R. right of way, in Chicago, and will construct two buildings to be occupied in part by their Chicago plants. The buildings will include a foundry and a two-story office building and pattern shop.

The Westinghouse Electric & Manufacturing Co. has recently received the following orders: quadruple, direct current, No. 306 interpole railway motors equipped with K-35-G control, from the Morgantown & Dunkard Valley; 4 quadruple interpole motors equipped with multiple unit control from the Detroit United Railways Co., 20 quadruple, direct current interpole motors equipped with K-35-G control from the Cleveland Railways Co.

20TH CENTURY BORING TOOL.

There have been many improvements in machine tools and implements used with the same during the last decade, each one aiming at an improvement in product or in a reduction of cost, or in both. One of the most notable ones has been the invention of adjustable or expansion boring tools, especially as applied to the refitting of wheels to old axles.

The "Pohlman" expansion boring tool made by the Wellman Co., Medford, Mass., is a good example of the latest type of efficient boring tool.

The extension boring tools offer the same, or nearly the same, opportunity that one has in a planer—of using several cutters in order to diminish the power required to remove a certain amount of metal. The accepted theory is that the resistance offered by a cut varies as the square of the thickness of the chip. The accompanying illustrations, A, B, C, will assist one in taking in the situation at a glance.

A is a block in which one cutter is being fed at the rate of ¼ in. at each revolution. After the first revolution the cutter has opposed to its progress a chip ¼ in. thick. During the first quarter of the first revolution the cutter, starting at nothing, reaches a depth of 1-16 in.; at the half turn the chip has increased to ⅛ in.; at the three quarter turn to 3-16 in.; and finally at the end to ¼ in., and this is maintained until the last revolution.

In B, with two cutters, during the first quarter and up to the half revolution the action has been the same as that of the single cutter, but the depth of cut never gets beyond the ⅛ in. stage because there are two cutters at work and

one of them is continually clearing away ⅛ in. before or in front of the other one.

In C, or with four cutters, as in the "Pohlman" tool, the first quarter of the first revolution is the same exactly as the first quarter of the A, but after that neither cutter ever gets more than a chip 1-16 in. thick because the other three have each removed their 1-16 in. before the path of the one following; but the four together have in a full revolution removed ¼ in.

The resultant saving in power for the work is so evident as to need no explanation.

These tools are manufactured for use in boring mills, upright drills, turret lathes—in short, in any tool used for boring. They are left with a rough turned shank, ready to be fitted to the tool in which it is to be used. This shank is part of the tool itself; or the shank is left on an intermediate spindle fitted to the boring tool. They are made in many standard sizes.

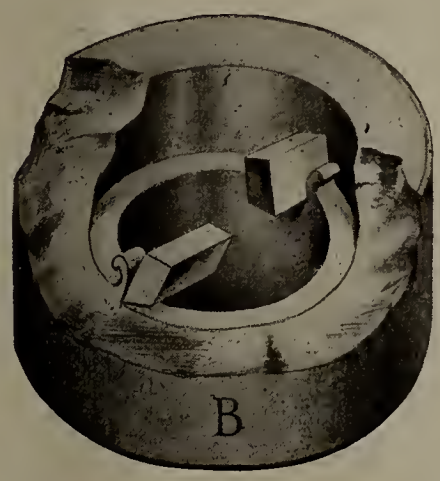

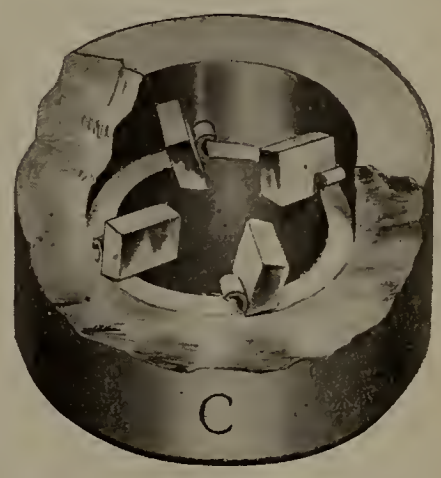

Members of the Chief Interchange Car Inspectors' & Car Foremen's Association

Chas. L. Acker, M. M....T. T. Ry., 209 Courtland Ave., Toledo, O.
Peter Alquist, F. C. D...C. H. & D. Ry., 675 N. West St., Lima, O.
J. L. Andrews, F. C. I. & J. C. I.....E. P. & S. W. Ry.....P. O. Box 738, Tucumcari, N. M.
J. M. Ashby, C. C. I.....N. Y. P. & N. Ry.....Cape Charles, Va.
A. Armstrong, J. C. I....All Lines..519 Austell Bldg., Atlanta, Ga.
Fred Atwater .....Columbia Nut & Bolt Co..... Bridgeport, Conn.
E. L. Adreon, W. A. B. Co.....1932 North Broadway, St. Louis, Mo.
C. S. Adams, A. G. F....N. Y. C. & H. R. Ry. Car Shop.....Mott Haven, New York City
C. A. Allen, F. C. I.....N. Y. C. & H. R. Ry. .....427 Potomac Ave., Buffalo, N. Y.
C. G. Anderson, G. C. F..D. L. & W. Ry., 130 Ideal St., Buffalo, N. Y.
John Barnwell, A. C. I. I..All Lines .....Room 14, Union Depot, Kansas City, Mo.
F. A. Benson, C. J. I.....Erie-D. L. & W. R. R.....Erie Baggage Room, Elmira, N. Y.
F. P. Black, G. F.....C. & O. of Ind.....Brighton Station, Cincinnati, O.
H. Boutet, C. I. I.....All Lines.....Carew Bldg., Cincinnati, O.
G. M. Bunting, F. C. R...P. R. R.....Cleveland, O.
W. E. Barker, C. C. I....D. & H. Co.....Sidney, N. Y.
J. I. Bailey, F. C. R.....C. H. & D. Ry., 1107 Clark St., Toledo, O.
J. L. Brady, F. C. D.....L. & N. Ry.....1708 Greenup St., Covington, Ky.
J. C. Burke, F. C. D.....Mo. Pac. Shop.....3001 Chouteau Ave., St. Louis, Mo.
C. D. Brenneman, F. C. D.M. & O. Ry.....Cairo, Ill.
A. Berg, F. C. D.....L. S. & M. S. Ry.....920 East 25th St, Erie, Pa.
J. V. Berg, Clerk.....L. S. & M. S. Ry.....Cleveland, O.
Chas. Bossert, C. I. I....All Lines, U. S. Yards.....Chicago, Ill.
J. A. Bradley, F. C. D...N. Y. C. & St. L. Ry.....187 Babcock St., Buffalo, N. Y.
R. L. Burch, G. C. F....B. & O. Ry.....Newark, O.
T. M. Baughan, G. C. F..C. G. W. Ry.....Oelwein, Ia.
Val Baltz .....Wheeling Term. .....2810 Moyston St., Wheeling, W. Va.
L. J. Burns, Eq. Insp.....C. & O. Ry.....2037 Eastern Ave., Covington, Ky.
J. Brannon, A. C. I. I....All Lines.....Carew Bldg., Cincinnati, O.
A. A. Burkhard, A. G. F..N. Y. C. & H. R. Ry..West Albany, N. Y.
F. M. Brown, F. C. R....Erie Ry. .....1435 Kenilworth Ave., Cleveland, O.
H. Baldwin, F. C. R.....M. C. Ry., 553 Victoria Ave.....Niagara Falls, Ont., Canada
W. F. Brazier, S. R. S...N. Y. C. & H. R. Ry.....New York City
J. H. Bendixen, Vice-Pres.Bettendorf Axle Co.....Davenport, Ia.
John Brady .....Bettendorf Axle Co.....Davenport, Ia.
Jos. Backman, F. I.....N. Y. C. & H. R. Ry.....644 Polk St., West New York, N. J.
B. Boutet, A. C. I. I.....All Lines, 809 Carlysle Ave., Cincinnati, O.
R. Barnaby, F. C. I.....D. L. & W. R. R...Sloan, Erie Co., N. Y.
G. J. Charlton, F. C. D...D. L. & W. Ry.....520½ Lake St., Buffalo, N. Y.
F. Cleary, C. C. C. D....D. L. & W. Ry.....114 Schiller St., Buffalo, N. Y.
M. Covert, A. M. C. B...S. C. Line.....Chicago, Ill.
T. G. Case, F. C. I.....N. Y. C. & H. R. R.....Grand Central Terminals, New York City
H. N. Calderwood, G. C. F.A. T. & S. F. Ry., 1641 Woodlawn Ave. .....Kansas City, Kan., Argt, Station
E. R. Campbell, G. C. F..Minn. Trans. Ry. Co.....St. Paul. Minn.
W. D. Cox, T. I.....W. & L. E. Ry., 1526 Broadway, Toledo, O.
C. H. Costley, C. J. C. I. Cairo Term. .....Cairo, Ill.
W. Chapman, F. C. D....P. R. R. & N. Y. C. & H. R. Ry.....Canandalgua, N. Y.
A. C. Colson, G. F. L. & C. D. .....L. S. & M. S. Ry.....94 King St., Dunkirk, N. Y.
J. W. Curran, G. C. I...B. & O. R. R.....509 Overton St., Newport, Ky.
Chas. Carey, C. C. I....E. J. & E. Ry.....9132 Greenwood Ave., Chicago, Ill.
F. T. Carpenter, C. F....H. V. Ry.....226 N. Spring St., Logan, O.
J. Coleman, A. C. I. I...All Lines..758 West 9th St., Cincinnati, O.
F. W. Chaffee, G. C. I...N. Y. C. & H. R. Ry.....N. Y. C. Station, Albany, N. Y.
A. E. Calkins, C. C.....N. Y. C. & H. R. Ry.....610 Grand Central Station, New York City.
D. Copland, A. G. M.....G. A. C. Co.....Harris Trust Building, Chicago, Ill.
E. Chamberlain, C. F.....P. .....N. Y. C. & H. R. R.....New York City
J. R. Cardwell.....Union Draft Gear Co.....544 Monadnock, Bldg., Chicago, Ill.
Geo. B. Culver.....Ward Eqpt. Co.....1029 High Bridge, New York
G. F. Cassidy, Foreman..N. Y. O. & W. Ry.....Weehauken, N. J.
J. Dixey, M. C. B.....D. S. D., 6340 Ingleside Ave., Chicago, Ill.

S. Demint .....All Lines .....
..Room 14, Union Depot, Kansas City, Mo.
Jos. Dyer, C. I. I.....All Lines.....Youngstown, O.
T. A. Donahue, Foreman.C. M. Co.....Glendale, O.
Arthur Deane, C. J. C. I..D. & H. Co. & D. L. &W. Ry.....
..... Binghamton, N. Y.
P. T. Dunn, M. M.....P. R. R.....Chicago, Ill.
Frank Deyot, A. G. F....N. Y. C. & H. R. Ry.....
.....1002 Fillmore Ave., Buffalo, N. Y
J. B. Dunkin, Foreman..L. S. & M. S. Ry.....Collinwood, O.
J. H. Douglas, F. C. R..W. & L. E. Ry..2614 Pratt St., Toledo, O.
H. J. Dormer, G. C. F...T. T. Ry.....2028 Mich. St., Toledo, O.
J. P. Donahue, Foreman.L. T. Ry.....348 Georgia Ave., Lorain, O.
T. J. Donahue, Foreman.N. Y. C. & H. R. Ry.....
.....218 Hauge St., Rochester, N. Y.
J. H. Diebert, F C. R...L. V. Ry., 316 Fenton St., Buffalo, N. Y.
A. Duckworth, F. C. D..G. T. P. .....
.....77 Alma St., St. Thomas, Ont.,Can.
F. C. Dunham .....U. S. Metal Mfg. Co.....
.....165 Broadway, New York, N. Y.
J. J. Devanney, F. C. D..T. R. R. A.....
.....410 Union Station, St. Louis, Mo.
F. Eicher, Foreman.....C. C. C. & St. L. Ry.....
.....3rd & Mill St., Cincinnati, O.
W. P. Elliott, F. C. D...Wiggins Ferry Co.....
.....1218 N. 15th St., East St. Louis, Ill.
O. G. Eubanks, C. C. I...A. C. Line.....Montgomery, Ala.
B. F. Edmonds, F. C. I..St. L. & S. F. Ry.....
.....1815 Booneville St., Springfield, Mo.
J. E. Eipper.....Columbia Nut & Bolt Co.....
.....4322 N. 41st Ave., Chicago, Ill.
Max Epstein, President..G. A. C. Co.....
.....Harris Trust Bldg., Chicago, Ill.
J. W. Ensign, Distriet
Manager .....A. C. & F. Co.....Huntington, W. Va.
John Edwards .....9328 Luella Ave., So. Chicago, Ill.
J. W. Egan, Foreman....Erie Ry.....Nillson Ave., Cleveland, O.
F. L. Fox, G. C. I.....P. M. R. R.....
.....Union Depot Bldg., Detroit, Mich.
J. H. Forrest, F. C. R...T. & O. C. Ry.....
.....682 Wallbridge Ave., Toledo, O.
W. J. Frey, G. C. F.....L. E. & W. Ry.....Lima, O.
J. F. Farran, F. C. R...Penn. R. R.....Terrace Park, O.
A. Faerber, F. C. R.....N. Y. C. & H. R. Ry.....
.....51 Girard St., Buffalo, N. Y.
D. C. Follas, C. C.....T. T. Ry., 204 Terminal Station, Toledo, O.
Geo. Fisher, F. C. R.....G. T. R. & Wabash Ry.....
.....St. Thomas, Ont., Canada
H. H. Fryer, Rept.....S. C. L. .....
..29 Live Stock Exchange, Buffalo, N. Y.
A. T. Fish, G. I.....N. Y. C. & H. R. Ry.....
.....94 Oxford Ave., Buffalo, N. Y.
G. W. Ferguson, Supt...L. T. Ry.....Lorain, O.
E. S. Farlling, G. F.....Jersey Shore Shops.....Jersey Shore, Pa.
N. Fehl, F. C. R.....Penn. R. R. .....
.....3426 Golden Ave., Cincinnati, O.
Geo. P. Fox, G. F. C. D..N. Y. C. & H. R. R.....
.....430 Elk St., Albany, N. Y.
C. R. Greene, C. J. C. I..All Lines.....So. St. Joseph, Mo.
Geo Graeber, F. C. P...D. & L. W. Ry., 213 Grey St., Buffalo, N. Y.
J. J. Gainey, G. C. F....C. N. O. & T. P. Ry.....
.....16 Davies St., Ludlow, Ky.
P. S. Givans, Foreman...L. & N. Ry.....Cincinnati, O.
C. F. B. Granstaff, J. C. I.B. & O. & W. T. Ry.....
.....1053 Cherry St., Wheeling, W. Va.
J. E. Gillham, C. J. I....El. P. Rys.....
.....1225 Wyoming St., El Paso, Tex.
J. M. Getzen, C. Arb. D..Niagara Frontier Car Inspection.....
..... Buffalo, N. Y.
J. O. Gould, Genl. Supt..Gould Coupler Co.....Depew, N. Y.
E. A. Gilbert, Rept.....W. H. Miner Co.....
.....667 Rookery Bldg., Chicago, Ill.
A. G. Goolsby, Foreman.E. P. & S. W. Ry.....
.....2910 Madiera St., E. El Paso, Tex.
Thos. F. Gallary, P. W. I.N. Y. C. & H. R. Ry.....
.....20 York St., Buffalo, N. Y.
J. D. Gresham, F. C. R..U. R. R. Co.....
.....1063 Rozell St., Memphis, Tenn.
C. Hildebrand, Foreman..B. R. & P. R. R.....
.....27 Garvey Ave., Buffalo, N. Y.
J. W. Hogsett, C. I. I....All Lines .....Fort Worth, Tex.
C .M. Hitch, G. C. F.....C. H. & D. Ry.....Cincinnati, O.
G. F. Hitch, F. C. R.....Ill. Cen. Ry. .....
.....819 Rayburn Bld., Memphis, Tenn.
C. C. Hill, G. C. F.....C. & O. Ry.....Covington, Ky.
F. H. Hanson, D. G. C. F.L. S. & M. S. Ry.....
.....639 E. 101st St., Cleveland, O
S. C. Howe, D. A.....N. Y. C. & H. R. Ry.....
.....10 Colby St., Albany, N. Y.
W. H. Hall, C. C. I.....Cen. R. R. of N. J.....Jersey City, N. J.
Eugene Head, C. C. C. D.W. R. R.....Springfield, Ill.
C. C. Hewitt, S. I.....N. Y. C. & H. R. Ry.....
.....243 Maple St, Buffalo, N. Y.
E. Howe, Foreman.....M. C. Ry.....
.....Box 407, Bridgebury, Ont., Canada.
H. H. Harvey, G. C. F...C. B. & Q. Ry.....
..2348 So. Central Park Ave., Chicago, Ill.
J. C. Mumiston, C. J. I...L. S. & M. S. & B. & O. Ry....Elyria, O.
H. Hill, F. C. R.....C. C. C. & St. L. Ry.....Ivorydale, O.
M. F. Hogan, A. F. C. R.....434 Clark St., Waverly, N. Y.
J. L. Hodgson, M. C. B..G. T. Ry.....
.....1014 Huron Ave., Port Huron, Mich.
W. T. Horsman, A. C. I. I.All Lines.....1223 Dawson St., Toledo, O.
C. A. Halleen, F. C. D...L. S. & M. S. R. R.....Ashtabula, O.
M. Hoffman, F. C. R....D. L. & W. Ry.....
.....133 Millburn St., Buffalo, N. Y.
H. A. Hodson, F. C. D...C. C. C. & St. L. R. R...Brightwood, Ind.
W. Honeycutt, C. C. I...Santa Fe R. R.....Clovis, N. M.
W. L. Harwell, F. C. R..C. & O. R. R.....
.....1151 25th St., Newport News, Va.
T. O. I. Imhof, C. C. to
C. I. I.....All Lines....Terminal Station, Toledo, O.
F. J. Ieringhausen, J. C. I.....424 Bilbo St., Lake Charles, La.
A. Johnson, F. C. R.....N. Y. C. & St. L. Ry.....
.....7402 Ellis Ave., Chicago, Ill.
Ellis Jones, C. C.....T. & O. C. Ry.....Bucyrus, O.
I. J. Justus, S. I.....N. Y. C. & H. R. Ry., 1514 Grand
Cent. Term.....New York, N. Y.
W. E. Jones, C. C. I.....A. B. & A. Ry.....
.....620 Chestnut St., Atlanta, Ga.
C. L. Johnston, Sales Agt.N. M. C. Co.....Toledo, O.
E. H. Jones, S. I.....N. Y. C. & H. R. R. R.....
.....Car Shop, East Buffalo, N. Y.
C. L. Jolly, J. C. I.....Himtods, N. Y.
G. H. Jones, F. C. R....N. Y. C. & H. R. R. R.....
.....W. 65th St., Shops New York City
A. Kohlhepp, F. C. R....C. A. & C. Ry...Milo P. O., Columbus, O.
A. Kipp, G. C. I.....N. Y. O. & W. Ry.....Middletown, N. Y.
Thomas Kyle, F. C. D...N. Y. C. & H. R. Ry.....
.....575 Mott Haven, New York City
A. J. Krueger, P. W. I...L. S. & M. S. Ry.....
.....2003 Sassafras St., Erie, Pa.
Z. F. King, C. C. I.....A. C. Line.....Savannah, Ga.
M. A. Kemmett, G. C. F.C. R. R. of N. J.....Ashley, Pa.
A. H. Koerner, F. C. R..P. R. R.....Columbus, O.
Geo. R. Lovejoy, G. C. I.....226 Union Depot, Detroit, Mich.
P. M. R. R.....
M. Longdon, F. C. R.....B. & O. R. R.....
.....2452 W. 6th St., Cincinnati, O.
A. Lawson, Foreman.....N. Y. C. & H. R. R. R.....
.....Exchange St., Buffalo, N. Y.
H. A. Lightner, G. C. F..I. C. R. R.....East St. Louis, Ill.
Geo. Lynch, C. I. I.....All Lines.....Erie Depot, Cleveland, O.
F. M. Lucore, A. to G. A.A. R. R. A.....
G. C. Livingstone, F. C. R....401 Grand Central Station, Chicago, Ill.
H. V. Ry...1020 W. Broadway, Toledo, O.
W. C. Lindmer, F. C. I...Penn R. R.....Buffalo, N. Y.
S. R. Larimer, F. C. R..C. H. & D. Ry.....
.....50 N. Tremont St., Indianapolis, Ind.
Geo. W. Llewellyn, Secy.Joyce-Cridland Co. .....Dayton, O.
S. Lindman, F. C. R.....L. S. & M. S. Ry.....
.....4 Todd St., Ashtabula, O.
J. P. Mahoney, F. C. R..P. R. R.....682 Elk St., Buffalo, N. Y.
W. D. Mooney, F. C. R..L. S. & M. S. Ry.....
.....15242 Plato Ave., Cleveland, O.
Geo. E. Mitchell, M. C.
B. C. .....C. A. & C. R. R.....Mt. Vernon, O.
A. L. Marshall, G. C. F..D. R. & G. R., P. O. Box 86, Minturn, Colo.
P. J. McGreevey, F. C. R.B. & O. Ry.....Cleveland, O.
Jas. Marea, G. F.....T. St. L. & W. Ry.....
.....879 Prouty Ave., Toledo, O.
E. D. Morrison, G. F....B. & O. Ry.....Columbus, O.
A. S. Meek, I.....H. V. Ry. .....Logan, O.
J. E. Meehan, G. F.....W. R. R.....427 Crittenden, Toledo, O.
C. W. Maddox, G. C. I...C. & O. Ry., 309 N. 28th St., Richmond, Va.
W. H. Mayer, F. C. D...C. C. C. & St. L. Ry.....
.....520 N. Madison St., Bellefontaine, O.
Stephen C. Mason, Secy..McConway & Torley Co., Pittsburgh, Pa.
W. G. Millburn, C. J. I..All Lines, 562 N. Main St., Fostoria, O.
G. A. Marlow, C. I.....Penn. R. R., 16th & Wayne Sts., Erie, Pa.
F. L. Myers, F. C. R....Van Ry. .....East St. Louis, Ill.

W. R. McMunn, C. C. to S. R. S.....1514 Grand Cent. Term., New York City
H. A. Martin, G. C. F...B. & A. Ry.....Milo Junction, Maine
Geo. McDonald, D. C. I..C. R. I. & P. Ry.....32 N. Boeke St., Kansas City, Kan.

J. A. MacNeill, W. I.....A. C. & F. Co.....1510 Syndicate Trust Bldg., St. Louis, Mo.
Geo. V. Martin .....Natl. Mall. Cstg. Co.....Cleveland, O.
A. F. Macpherson, Vice-Pres. .....Bettendorf Axle Co.....1590 Old Colony Bldg., Chicago, Ill.
P. A. Martin, Supt. Eqpt.N. C. L. Co., 45th St. & Center Ave.... Chicago, Ill.
J. E. McCormick, G. C. F.Sou. Ry., Box 59.....Spencer, N. C.
E. Messeroll, F. C. R....G. T. Ry., Bridgeburg P. Q., Ont., Canada
J. B. Malone, F. C. R....C. & O. of Ind.....Brighton Station, Cincinnati, O.
C. J. McFadden, F. C. D.C. C. C. & St. L. Ry..East St. Louis, Ill.
O. W. Minnick, A. C. J. I.N. Y. C. & H. R. Ry., 2602 West 4th St.. Williamsport, Pa.
R. H. Niehaus, F. C. R..W. R. R...4135 Flad Ave., St. Louis, Mo.
J. T. Newby, T. C. I....M. & O. Ry., 213 Preston St..... Jackson, Tenn.
W. E. Neary, Foreman..A. C. & F. Co.....Detroit, Mich.
P. Nihill, C. J. C. I.....All Lines....43 Pearl St., Westfield, N. Y.
G. H. Nelson, Insp.....N. Y. C. & H. R. R. R., 113 Peabody St..Buffalo, N. Y.
R. J. O'Dea, A. S. C. D..Erie R. R.....Meadville, Pa.
T. J. O'Donnell, Arb.....Niagara Frontier Car Inspection.....Buffalo, N. Y.
Frank Ott, A. C. I. I....All Lines.....227 Field Ave., Toledo, O.
W. L. Ostrander, F. C. I.L. S. & M. S. Ry., 1245 Norwood Ave.... Toledo, O.
J. H. Orchard, F. C. D...D. & H. Co.....Carbondale, Pa.
A. G. Olberding, Pres....Columbia Brake Shoe & Foundry Co..... Cincinnati, O.

R. O'Neil, F. C. R.....C. H. & D. Ry.....Dayton, O.
Pearl Parker, D. G. F. C. D. .....C. I. & S. Ry.....Kankakee, Ill.
W. J. Palmer, F. C. D...L. S. & M. S. Ry.....Elkhart, Ind.
E. Pendleton, D. G. F...C. & A. Ry.....Alton, Ill.
Chas. E. Pfeiffer, G. C. I.B. R. & P. Ry., 15 Snider Ave.....Du Bois, Pa.
H. E. Passmore, M. M...T. & O. C. Ry.....Kenton, O.
H. G. Powell, F. C. R...N. & W. Ry., 1600 Brewster Ave..... Cincinnati, O.
A. M. Patrick, C. J. I...B. & M. & D. & H. Co.....Mechanicsville, N. Y.
E. C. Pearse, G. C. F....C. C. C. & St. L. Ry., 8701 Clark Ave.. Cleveland, O.
J. G. Pfister, G. C. F....N. Y. C. & H. R. Ry., 909 McBride St...Syracuse, N. Y.
G. C. Payne, Foreman...B. & M. & N. Y. C. & H. R. Ry.....Rotterdam Junction, N. Y.
W. Pigeon, F. C. I.....D. L. & W. R. R., 206 Gibson St.....Buffalo, N. Y.
H. C. Pearse, F. C. D...I. C. R. R..24 Pleasant St., Freeport, Ill.
C. C. Rodebush, S. A....Erie R. R..5318 Julia Ave., Cleveland, O.
C. Riordan, F. C. R.....N. Y. C. & H. R. Ry., 2340 Lockport St..Niagara Falls, N. Y.
James Reed, C. J. I.....N. Y. C. & H. R. Ry.....Buffalo, N. Y.
F. T. Rice, A. C. I. I....All Lines, 1620 Washington Ave.....Fort Worth, Tex.
S. Robinson, F. C. R.....P. M. Ry.....2416 Chase St., Toledo, O.
Jos. Rischman, F. C. R..Penn. R. R.....2019 Erie St., Toledo, O.
T. Reilley, G. Y. M.....C. C. C. & St. L. Ry.....Cincinnati, O.
Chas. A. Rudowsky, F. I.N. Y. C. & H. R. Ry., P. O. Box 383....White Plains, N. Y.
Otto Roem, C. C. to M. C. B. .....N. Y. C. & H. R. Ry.....Mott Haven Car Shops, N. Y. City
C. F. Richards, C. C. I..L. & H. R. Ry.....Phillipsburg, N. J.
John Sins, Foreman.....A. R. L. Co.255 E. Beck St., Columbus, O.
M. Shreenan, G. F. C. D.So. Buffalo R. R.....Buffalo, N. Y.
R. D. Shearer, G. F.....N. Y. C. & H. R. R. R.....Lyons, N. Y.
J. R. Schrader, G. F. C. D.N. Y. C. & H. R. Ry., 1244 Clay Ave.....New York City
P. C. Scheibel, C. C. D...N. Y. C. & H. R. Ry., Car Shops.....East Buffalo, N. Y.
F. C. Schultz, C. C. I.....C. B. & Q. Ry., 1625 S. Western Ave..... Chicago, Ill.
W. J. Stoll, C. I. I.....All Lines.....228 Term. Bldg., Toledo, O.

Jas. C. Scott, J. C. F....N. Y. C. & L. V. Rys., 86 Andes Ave....Geneva, N. Y.

W. E. Sutton, F. C. R...L. V. Ry....445 Broad St., Waverly, N. Y.
F. X. Schuler, J. I. & F..N. Y. C. & Owasso Ry., 20 Vanweden St. Auburn, N. Y.
J. L. Stark, G. C. I.....H. V. Ry.....Spahr Bldg., Columbus, O.
S. Skidmore, F. C. R.....C. C. C. & St. L. Ry.....6th and Millcreek, Cincinnati, O.
Chas. S. Stark, F. C. D..H. V. Ry.198 Thurman Ave., Columbus, O.
H. J. Smith, G. C. I.....D. L. & W. Ry.....Scranton, Pa.
J. B. Stachewicz, G. F...Erie Car Works.....Erie, Pa.
F. T. Smith, A. G. C. I...Erie Ry.....Salamanca, N. Y.
F. C. Stonehouse, F. A. B. D. .....H. V. Ry.....Columbus, O.
S. Stock, F. C. R.....D. L. & W. Ry.....226 Longenecker St., Buffalo, N. Y.
C. N. Swanson, S. C. D..A. T. & S. F. Ry.....130 Clay St., Topeka, Kan.
A. S. Sternberg, G. I. C. D.W. R. R.....Springfield, Ill.
B. S. Shuart, F. C. R....C. H. & D. Ry., Morefield Shops..... Indianapolis, Ind.

J. M. Shay, G. C. F.....B. & O. Ry...626 4th Ave., Cincinnati, O.
J. G. Stokes, F. C. R....M. C. Ry.....1414 South St., Toledo, O.
C. J. Stroke, A. G. F....N. Y. C. & H. R. Ry.....39 Manitoba St., Buffalo, N. Y.
A. T. St. Cyr, A. F. I...L. S. & M. S. Ry.....Ashtabula, O.
C. B. Shaver, G. C. F....St. L. T. & E. Ry., 532 Washington Pl..East St. Louis, Ill.
C. A. Shoemaker, Supt...G. A. C. Co.....Warren, O.
W. H. Sanford.....A. C. & F. Co.....Buffalo, N. Y.
W J. Schlacks.....McCord & Co., People's Gas Bldg..... Chicago, Ill.
E. E. Silk.....Bettendorf Axle Co.....Davenport, Ia.
J. Shyne, F. C. I.....N. Y. C. & H. R. Ry., 23 Littlefield Ave..East Buffalo, N. Y.

J. Schaefer .....338 Gibson St.....Buffalo, N. Y.
N. Schaefer, Foreman...C. E. Co.....90 Linden St., Ludlow, Ky.
P. Simpson, Supt. Eqpt..I. R. Co.....Lawrenceville, Ill.
W. Starkey, F. C. R.....A. A. Ry.....2515 Erie St., Toledo, O.
Hugh Steele .....C. R. D. Co., 1304 First Natl. Bank Bldg. Chicago, Ill.

H. B. Stuff, F. C. R.....Penn. R. R., 3462 Linwood Ave..... Cincinnati, O.
J. W. Stoker, G. F. C. C..N. Y. C. & H. R. R. R.....Mott Haven Car Shops, N. Y. City.
J. Stack, F. C. R.....B. & O. R. R.....East St. Louis, Ill.
F. W. Trapnell, C. I. I..All Lines, 14 Union Depot Bldg.....Kansas City, Mo.
C. W. Thompson, G. C. F.N. Y. C. & H. R. Ry., Center St.....East Syracuse, N. Y.
L. J. TenBroeck, J. F...D. & H. Co. & N. Y. O. & W. Ry.....Sidney, N. Y.
W. S. Teall, G. C. F.....D. & T. S. L...832 Barnes St., Toledo, O.
W. O. Thompson, M. C. B.N. Y. C. & H. R. Ry.....East Buffalo, N. Y.
C. A. Taylor, A. C. C. C. D. .....N. Y. C. & H. R. Ry., Room 1514.....Grand Central Terminal, N Y. City.
J. E. Vittum, C. I. I.....All Lines..396 N. High St., Columbus, O.
Chas. Waughop, C. I. I...All Lines, 5157 Fairmount Ave.....St. Louis, Mo.
W. R. Wilson, G. F. C. D.L. S. & M. S. Ry., 103 Emery St..... Toledo, O.
W. D. Williamson, J. C. I.L. S. & M. S. Ry., R. F. D. No. 43..... Greenville, Pa.
Chas. J. Wymer, G. C. I..C. & E. I. Ry.....Danville, Ill.
C. M. Whitney, G. C. F..St. L. & S. F. Ry.....Chaffee, Mo.
F. W. Werhan, F. C. D..A. C. L.....Florence, S. C.
A. F. Wilcox, M. C. B....Jacob Dold Packing Co....Buffalo, N. Y.
H. Woollatt, G. C. F.....P. M. Ry., 12 West Ave.....St. Thomas, Ont., Canada.
J. H. Weale, C. J. I.....N. Y. C. & H. R. Ry., 65th St. Yards....New York City.
G. C. Weight, Foreman..Penn. Ry., 856 E. 23d St.....Erie, Pa.
W. Westall, G. F.....L. S. & M. S. Ry., 748 E. 105th St..... Cleveland, O.
L. S. Wright.....Natl. Mall. Cstg. Co., 311 Ry. Ex. Bldg.. Chicago, Ill.
G. S. Wood.....209 Great Northern Bldg....Chicago, Ill.
G. A. Weber, C. C. D....L. S. & M. S. Ry.,539 W. 17th St., Erie, Pa.
G. L. Waltt, M. I.....N. Y. C. & H. R. Ry., 41 N. Ashland Ave.Buffalo, N. Y.
W. S. Wright, F. C. D...St. L. & B. E. R. R., 3604 State St.....East St Louis, Ill.
J. W. Wilson, C J. I....N. Y. C. & H R Ry., 2603 W. 4th St....West Williamsport, Pa.
J. Westervelt, G F.....N Y C & H. R. R. R. Rochester, N. Y.

Recent Railway Mechanical Patents

1,002,834.

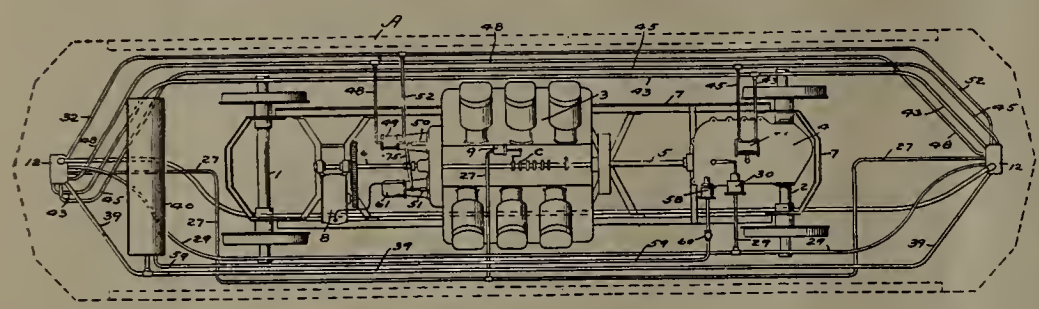

Reissue 13,297.

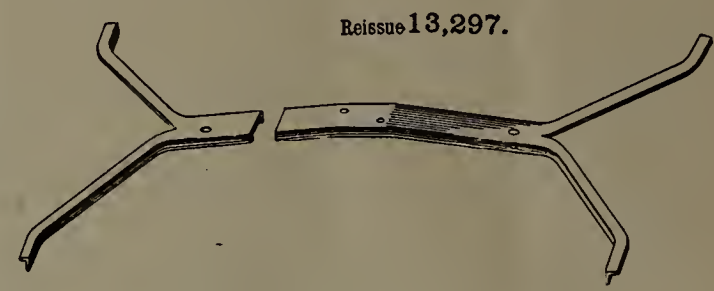

RAIL MOTOR CAR.

1,002,834—Leland F. Goodspeed, Wilkinsburg, Pa., assignor to the Westinghouse Air Brake Co., Pittsburgh, Pa.
Patented Sept. 12, 1911.

In this improved car, which is driven by an internal combustion engine, preferably of the six cylinder type; means are provided for controlling the brake, clutch, chain speed gears, etc., by means of compressed air, all of these devices being controlled by means of pipes which run to a controller in the nature of an engineers' valve located at each end of the car. A motor generator and storage battery are also provided, for starting the engine and for auxiliary power purposes.

TRUCK FRAME.

1,006,549—A. L. Hastings, Chicago, Ill.

A truck frame which consists of the combination of a body part comprising upper and lower flanges and two vertical parallel connecting webs connecting the flanges, a chafing frame bent up of sheet metal into substantially T-form and surrounding each of the webs, the opposed faces of the chafing frames being offset inwardly adjacent their lower ends to allow insertion of a bolster between the plates.

1,005,340.

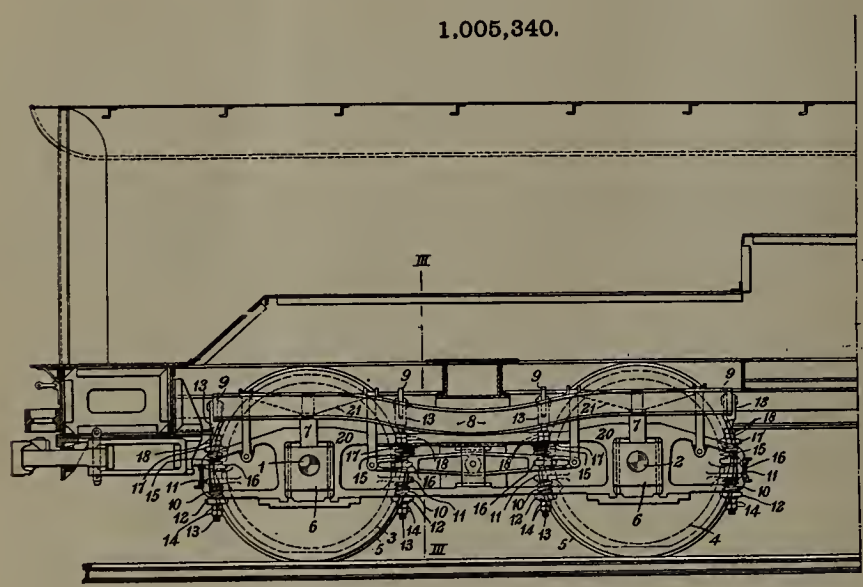

Reissue 13,297

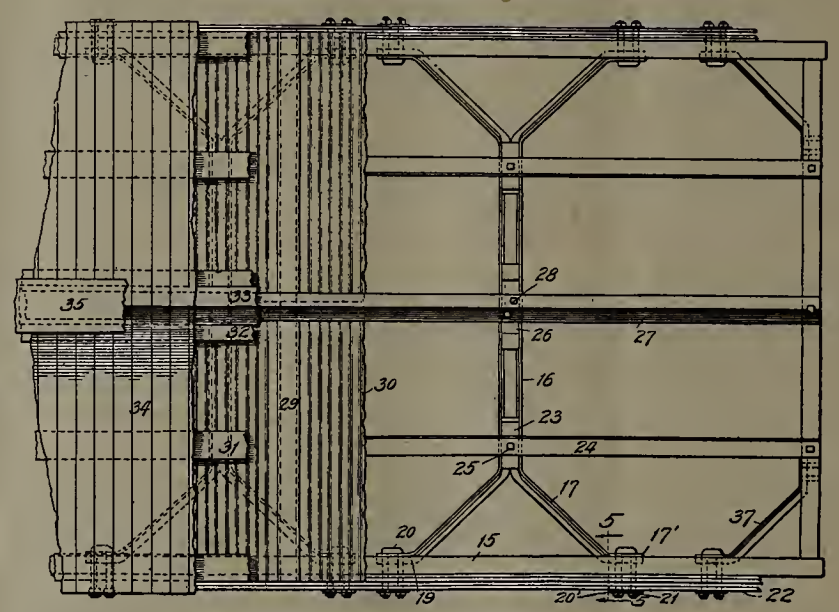

CAR-ROOF FRAMEWORK.

13,297—Edward Posson, Chicago.
Reissued Oct. 3, 1911.

This patent covers a carline which is especially designed to brace the roof against diagonal strains. As clearly shown in the illustration, it consists of a flanged beam having a web split in from the ends and spread apart so as to constitute braces.

VEHICLE TRUCK.

1,005,340—Robert Siegfried, Pittsburgh, assignor to Westinghouse Electric & Manufacturing Co., Pittsburgh, Pa.
Patented Oct. 10, 1911.

The object of this invention is to provide a vehicle truck so constructed as to obviate the necessity of employing means for opposing the torques of reaction exerted upon the stationary members of the propelling motors which shall be independent of the means employed for resiliently supporting the motors. The necessity for employing a torque-opposing member is obviated, the hanger rods of the motors serving both as suspension means and as torque-opposing means. This result is effected by providing a single rigid frame surrounding all of the motors and employing hanger rods upon both sides of the motors and by also interposing resilient means between both sides of lugs upon the motors and suitable seats carried by the hanger rods.

1,000,549.

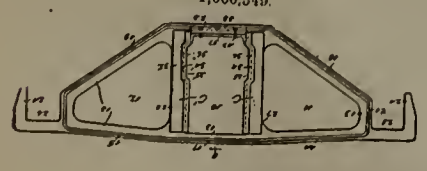

1,006,632.

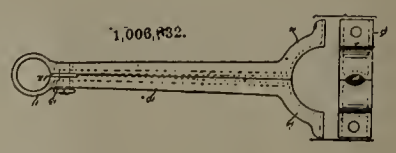

STEEL CONNECTING ROD.

1,006,632—L. W. Coppock, Decatur, Ind.

A pressed-steel connecting rod for engines consisting of a central body portion formed of two longitudinal parts welded together, and having an eye at one end formed by centrally bending the material constituting the connecting rod and the other end of each welded half of the connecting rod spread into the arc of a circle; a semi-circular member having a tongue punched out of the same centrally, means for securing the member to the bifurcated end of the connecting rod, and a split bushing with one-half riveted to the spread end of the connecting rod and the other half provided wth a hole that registers with the punched out opening through the semi-circular member.

The Cleveland Welding & Manufacturing Co., has been incorporated at Cleveland, O., by E. I. Heinsohn, H. J. Holden, L. E. Yaggi, M. L. Williams and C. D. Sword, all of Cleveland; capital $150,000.

Mr. C. J. Nash, who has been with the Westinghouse Air Brake Co., as special representative in the draft gear department, has resigned to engage in the railroad supply business and will make a specialty of draft gear attachments, with headquarters at Pittsburgh, Pa.

Mr. Geo. W. Greene, formerly Pittsburg manager of the American Bureau of Inspection and Tests, has severed his connection with the above concern and is now associated with the Hildreth-Jones Co., of Chicago, and Hildreth & Co., of New York, in the capacity of mechanical engineer.

Mr. Gano Dunn has just returned from abroad, where, as a representative of the United States government and as president of the American Institute of Electrical Engineers, he has been attending the International Electrical Congress at Turin and the meeting of the International Electro-Technical Commission. Mr. Dunn, who for many years was first vice-president and chief engineer of the Crocker-Wheeler Co., has been elected a director and a vice president of J. G. White & Co., Inc., New York.

Frank G. Goehler, who has lately been engaged in the railway supply business, and formerly connected with the purchasing department of the A. T. & S. F., has been made manager of the Railway & Supplymen's Mutual Catalog Co., with offices in the Railway Exchange, Chicago, Ill.

RAILWAY MASTER MECHANIC

Established 1878

Published by THE RAILWAY LIST COMPANY

WILLIAM E. MAGRAW, Pres. and Treas.

CHAS. S MYERS, Vice-Pres. LYNDON F. WILSON, Managing Editor
C. C. ZIMMERMAN, Bus. Mgr. OWEN W. MIDDLETON, Assoc. Editor
J. M. CROWE, Mgr. Central Dist. KENNETH L. VAN AUKEN, Assoc. Editor

Office of Publication: Manhattan Building, Chicago
Telephone, Harrison 4948
Eastern Office: 50 Church Street, New York
Telephone Cortlandt 5765
Central Office: House Bldg., Pittsburg, Pa.

A Monthly Railway Journal

Devoted to the interests of railway motive power, car equipment, shops, machinery and supplies.
Communications on any topic suitable to our columns are solicited.
Subscription price, $2.00 a year; to foreign countries, $2.50, free of postage. Single copies, 20 cents. Advertising rates given on application to the office, by mail or in person.
In remitting, make all checks payable to The Railway List Company.
Papers should reach subscribers by the 16th of the month at the latest. Kindly notify us at once of any delay or failure to receive any issue and another copy will be very gladly sent.

Entered as Second-Class Matter June 18, 1895, at the Post Office at Chicago, Illinois, Under Act of March 3, 1879.

Vol. XXXV Chicago, December, 1911 No. 12

CONTENTS.

Editorial—
Mallets Tests 533
Safety Appliance Act 533
Accident Statistics 533
Developments in British Rolling Stock 534
Mallet Locomotive Tests, N. Y. C. & H. R. R. R. 535
Fire Fighting Engines 540
Association of Railway Electrical Engineers 540
Swedish Steels 541
Grand Rapids Roundhouse, P. M. R. R 543
Largest Tank Car Ever Constructed 544
Railway Business Association Dinner 545
Oxy-Acetylene Welding 548
Safety Bureau, C. G. W. R. R 548
The Last Gasp of a Gondola 549
Relative Advantages of Group and Individual Motor Drive 551
Notes on Steel Tires for High Speed Locomotives 552
Shop Kinks—
Chicago & Alton R. R 554
Progress in Railway Electrification 557
The Light for Safety 559
Locomotive Netting Machine 560
Modification of the Walschaert Valve Gear 561
Use of Denatured Alcohol in Railway Service 562
Development in Railway Electrical Apparatus During the Past Year 564
Personals 565
Obituary 566
Among the Manufacturers—
Fenestra Steel Window Sash 567
Hunter Inserted Tooth Saw Blade 568
Practical Washing Machine for the Shop 568
New Literature 568
Industrial Notes 569
Recent Railway Mechanical Patents 570

Particular attention is due the article describing the Mallet locomotive tests on the New York Central & Hudson River, which appears on another page of this issue. The data obtained is most interesting from a number of view points. One of the most important results is the first definite information on the practicability of the superheater applied to the Mallet. The American Locomotive Co., consistent in its conservative policy, has until recently declined to recommend specifically such use of superheater equipment. Its avowed policy of recommending this combination in the future is probably based mainly, if not entirely, upon the results of these tests.

The use of a highly developed and practical simpling system, in the articulated compound locomotive, is, by these tests, proven a necessity in efficient operation; not inferring that the advisability of its use was ever doubted.

The data on the machine efficiency of the Mallet can only be noted with universal surprise. Comparisons with that of the more compact heavy passenger locomotive, are most favorable to the Mallet. A comparatively low machine efficiency would naturally be expected in the engine with the larger number of bearings and moving parts. In general the results of the tests in question point, logically, to a prospect of the Mallet becoming the standard type of locomotive for freight service in both flat and mountainous territory.

About the first of November the United States Supreme Court handed down a decision that all equipment on any road which is a highway of interstate commerce must comply with the safety appliance act. The decision was the result of a case of the government versus the Southern railway to determine whether the federal law was applicable when a shipment was made from one point in Alabama to another, in an improperly equipped car. At the same time it was also held that the safety appliance law was constitutional. This decision should clear things up considerably by letting the roads know where they stand and should relieve the friction between the interstate commerce commission and the various state commissions in matters of this sort. It, of course, strengthens the position of the interstate commerce commission and many believe that it will lead the way to absolute control of railways by the national commission. In such an event the state commissions might become subordinate branches of the national commission, with authority only over intrastate matters.

According to the accident statistics of the Interstate Commerce Commission, for the year ending June 30, 1911, the total number of railway employees killed by industrial accidents was 439. By industrial accidents is meant accidents on bridges, at stations and shops; that is, where the movement of rolling stock was not concerned. The number injured under the same classification was 79,237; however these include many minor accidents such as bruising and cutting of fingers. But the figures show that the "Safety First" campaign of the Chicago & North-Western may well be emulated by other roads and that much is yet to be done in safeguarding the lives of shop men, as well as those of other railway men.

DEVELOPMENTS IN BRITISH ROLLING STOCK.

The Great Northern Railway in England a few years ago found that some of its old six-wheeled passenger coaches were in too good repair to break up, and were also comparatively modern in type. It was therefore resolved to make some interesting experiments with them. They were refitted with trucks on the plan of three four-wheeled bogies to two coaches—that is to say, they became twin carriages through the adjoining ends being supported on one bogie. The rigidity of the six-wheeled coach was done away with, whilst the same number of wheels were employed. Two new trains have now been built at Doncaster for suburban traffic which are mounted in pairs on bogies in the same way. Each train consists of eight carriages, there being twelve four-wheeled bogies amongst them. These coaches are of the widened type, have steel underframes and have the high elliptical roof in the Great Northern style. They are arranged to accommodate twelve passengers, six-a-side in the second and third-class compartments, and five-a-side in the first-class. There is a total seating arrangement for 80 first-class, 180 second-class and 372 third-class passengers, or 632 in all. Incandescent gas lamps are employed and the weight of the train is 147 tons.

The Great Northern was the first to introduce the "Atlantic" type of passenger engine in England. Mr. Ivatt, like others who have followed his example, used outside cylinders driving on to the rear pair of coupled wheels, and the first engine turned out was the celebrated "990." A number of these engines were built, and then a larger and heavier class were turned out, which, with some slight modifications, remain the standard express engines on the Great Northern today. Mr. Ivatt had also built a four-cylinder simple Atlantic engine, No. 271, with cylinders 15 in. by 20 in., all driving on the leading pair of coupled wheels, but otherwise of the "990" class. The valve gear of this was afterwards altered, but the engine has now been rebuilt with two inside cylnders only, 18½ by 26 in., with piston valves. The engine is also fitted with a superheater and the Wakefield mechanical lubricator, now extensively used on the London and North-Western super-heated engines. Ramsbottom double safety-valves are employed, and except for wheel arrangement the engine has a certain similarity to the London and North-Western engines. A noteworthy point is that the Lancashire and Yorkshire Railway only just missed having the honor of introducing the Atlantic type of engine into England, as they followed the Great Northern immediately, but all their Atlantic engines have inside cylinders and much higher pitched boilers than those of the altered Great Northern engines.

These are regarded as good examples of what can be done in the way of re-building locomotives. The practice has, of course, been common on railways from the earliest times. Some transformations have been so great as to be noteworthy. The Great Western has done a great deal of this. Some of its single-driver express engines were turned out just before the alteration of the broad gauge to narrow, and were specially built so as to be easily changed. But after running some time as narrow-gauge engines with a 2-2-2-wheel arrangement, they were rebuilt with a leading truck, and some have latterly again been rebuilt, with the standard coned domeless boiler. Again, with the six-coupled 4-6-0 express engines a trial was made with the Atlantic type, and one of the six-coupled was altered to this latter; but on the decision to build no more Atlantics it was again rebuilt in its previous 4-6-0 form. On the London and North-Western Mr. Web made a point of rebuilding the Ramsbottom engines, and though Mr. Whale and latterly, Mr. Bowen-Cooke, have scrapped the Webb three-cylinder compound engines, they have rebuilt, and Mr. Cooke is still rebuilding, the mineral compound engines as simple two-cylindered locomotives; and he has also dealt in the same way with some of the four-cylinder compound passenger engines. On the North Eastern a drastic alteration was made some time since, when a two-cylindered Worsdell von Borries compound was rebuilt as a three-cylindered compound engine on the Smith system, while at the present time the London, Brighton and South Coast Railway has rebuilt two six-coupled tank engines with large modern boilers and cabs, quite transforming them. One of these was built by Mr. Stroudley as far back as 1883 and the other by the late Mr. Billinton. The former engine originally had a total heating surface of only 852 feet, but now has one of 1,053.6 square feet.

The Great Eastern Railway has running a number of powerful four-coupled express engines of James Holden's design which were rebuilt some time since with much larger boilers; but the most remarkable change on that line probably was the alteration of the "decapod" tank engine to a smaller but still heavy mineral eight-wheeled freight engine. On many of the lines the conversion of small passenger tank engines to so-called motor cars is noteworthy.

Particulars have also just been published regarding another new type of locomotive which has been designed for the North-Eastern Railway by Vincent L. Raven, the company's chief mechanical-engineer, and a series of these engines have been built at Glasgow. The engines have four wheels coupled, a leading truck, and a pair of trailer wheels under the firebox. The coupled wheels are 6 ft. 10 in. in diamater, the truck wheels, 3 ft. 7¼ in. in diameter and the trailer wheels are 4 ft. in diameter. The cylinders are three in number, and are all cast together, one central and two outside the frames, and are 15½ in. in diameter, with a stroke of 26 in., and are fitted with piston valves. Ten engines are built for saturated steam and ten for superheated steam (Schmidt's system). The superheated engines have cylinders 16½ in. diameter; all other parts are similar to the saturated steam engines.

These engines are the first passenger engines built for any English railway with three cylinders and piston valve chambers in one casting. They are intended to deal with the heavy East Coast passenger traffic between York, Newcastle and Edinburgh, and have for some weeks past been dealing satisfactorily with this service, hauling trains varying from 300 to about 500 tons behind the tender at average speeds up to 53 miles per hour. The consumption of coal by the saturated steam engines is lighter than that of the previous engines working the same traffic, while the consumption of coal by the superheated engines is still lighter.

All the Scottish railways have now experimented with superheated steam on locomotives, and have decided that the system is a great improvement. The Caledonian Railway began about two years ago, when its officials fitted the Schmidt apparatus on a four-coupled passenger express engine. The trials were satisfactory, and four additional engines of the same type were fitted similarly. The company is now running seven engines with superheated steam, two are being fitted, and four new engines are to be equipped with the apparatus. It has been found that the working pressure can be reduced from 180 pounds to 200 pounds to 160 pounds and 165 pounds. In the earlier engines fitted the cylinders have been increased from 19 in. diameter to 20 in., while in the later locomotives the diameter is 21 in.

The North British Railway is equipping four of its express locomotives with superheating apparatus. Two have been running for some time with the Phoenix or "smokebox" type, and two new 4-4-0 engines of the "Walter Scott" class will have the Schmidt type. Recently the Highland Railway built a locomotive fitted with the Phoenix superheater, but it has not yet been in service. The Great North of Scotland company is also making arrangements for giving superheated steam a trial. It is interesting to note, in this connection, that the Scottish companies are restricting the use of superheated steam, for the present at least, to main line locomotives, as they believe that the best results are obtained on long-distance runs.

Mallet Locomotive Tests, N. Y. C. & H. R. R. R.

An increase of 40 per cent in the operating capacity of a single track division without the construction of a single mile of new track is one of the savings resulting from the installation of 26 Mallets in place of heavy consolidation locomotives in slow freight road service on the Pennsylvania division of the New York Central & Hudson River Railroad. Where formerly 1,000 cars daily was the maximum, 1,400 cars can now be handled in 24 hours.

Mallet Compound Built for the N. Y. C. & H. R. by the American Locomotive Co.

Other equally important results from a commercial standpoint, and improvements in operating conditions secured by the introduction of the Mallet and the explanation of how these locomotives effect such results as shown by the records of careful and exhaustive comparative tests are given below.

A large volume of slow freight traffic is handled over this single track division. The profile illustrated shows the grade conditions. There are numerous curves, some of 8 degrees. Formerly, the traffic was handled by consolidation locomotives designated as class G. 6. G. and having a total weight of 236,000 pounds and a tractive power of 45,700 pounds.

With the assistance of another engine of the same class on the ruling grades, a single G. 6. G. consolidation could take a maximum train of 3,500 tons over the road at an average speed of 15 to 18 miles per hour.

Sixty locomotives of this class were required to handle the traffic. Of these, 31 were used in road service and the remainder in pusher service. Twenty pushers were stationed at Stokesdale Junction, two were used in helping around the Wye at Axis; one at Corning; four were assigned to transfer service at Beaver Dams and two at Newburgh Junction. With this motive power, the maximum operating capacity of the single track was so nearly reached that overtime, always expensive, was excessive.

To secure greater operating capacity meant either double tracking the line or increasing the weight of the train by the adoption of heavier power. Questions of economy dictated the adoption of the latter course.

The management desired to procure a locomotive capable, without assistance, of handling a train of 70 cars—the maximum capacity of the existing sidings—over the division at an average speed of 10 to 14 miles per hour.

Because of the large tractive power available in the Mallet this type seemed to offer the best means of accomplishing the end in view and steps were taken to thoroughly investigate its merits for this division. The adoption of the Mallet type on another division of the New York Central had previously been considered and a design of the 2,662 type of wheel arrangement had been constructed by the American Locomotive Company for trial purposes.

In order to secure reliable data by which to accurately determine whether further investment of money in the Mallet type of locomotive would be justified and upon which to develop a design best adapted to the service conditions on the Pennsylvania division a thorough and exhaustive test of the trial locomotive (though not designed for this division) was made in competition with two of the consolidation type operated under identical conditons.

Two separate series of tests were made, the first being so conducted as to determine the comparative economic performance of the Mallet as designed, at various speeds.

In this series, the Mallet gave considerable economy in fuel per unit of work as compared with the consolidation, when operated under the conditions for which it was origi-

nally designed; namely, low speed heavy freight service in which its maximum draw bar pull at slow speeds was obtained over a considerable percentage of the division. But in order to adapt this design to a wider range of operating conditions such as obtained in the service on the Pennsylvania division, and to secure greater economy and increased capacity at higher speeds, the testing committee recommended the application of a superheater.

Although the possible advantages of the application of the superheater to the Mallet were thoroughly appreciated the American Locomotive Company had not hitherto felt fully justified in recommending such practice except as an experiment. In spite of long and thorough investigation, sufficiently accurate and complete data as to the economic performance of the Mallet with and without superheater were not available. The company therefore welcomed an opportunity to definitely determine the best practice by a thoroughly comparative test participated in jointly by the New York Central and Pennsylvania railroads and the American Locomotive Company.

The Mallet was returned to the Schenectady plant and was equipped with a superheater and otherwise prepared for the tests and for the operating conditions of the road at large expense. The changes included the application of a "Security" brick arch. A second test of the Mallet as modified was then made. In comparison with the results of the first test, the second test proved conclusively that highly superheated steam used in conjunction with compound cylinders gave greater economy in operation as a result of the improved cylinder performance thereby secured.

Acting on the basis of the data secured, the American Locomotive Company has strongly recommended the application of fire tube superheaters to Mallet engines subsequently built by them.

These tests thus mark an important step in the development of this type of locomotive to a still higher degree of efficiency. As a result of the successful performance of the Mallet in the final tests, the additional twenty-five Mallets now in service were purchased.

These were built to practically the same specification as the original Mallet as modified except that both the high and low pressure cylinders were increased one inch in diameter to 21½ and 34 inches respectively and the boiler pressure was reduced from 210 to 200 pounds. The net result of these changes was an increase of 900 pounds in the normal maximum tractive power over that of the engine which was tested or from 66,600 to 67,500 pounds. The total weight of the engine was also increased 2,000 pounds, or from 352,000 to 354,000 pounds. Comparison between the design finally adopted and that of the locomotive tested is given in table No. 1.

These locomotives thus represent a design correctly proportioned for the work to be done on the basis of a careful analysis of accurate data, showing the effect of each of the parts on the performance of the locomotive as a whole; and one which is equipped with all the fuel-saving devices whose value has been tried and proven in actual service. To this fact their success and the economies they have effected are due.

A single Mallet hauls a 4,000 ton train over the division without assistance. As a result, pusher service has been eliminated; and in place of the 60 engines previously required, 26 Mallets alone now handle the entire traffic.

With the increased maximum train load, trains daily over the division have been decreased by 10 each way. In addition, congestion of traffic has been relieved and overtime has been reduced 80 per cent. Because of their higher efficiency, the Mallets save on the average, 35 per cent in fuel burned per ton-mile. This means that they make 54 per cent more ton-miles per ton of coal than the consolida-

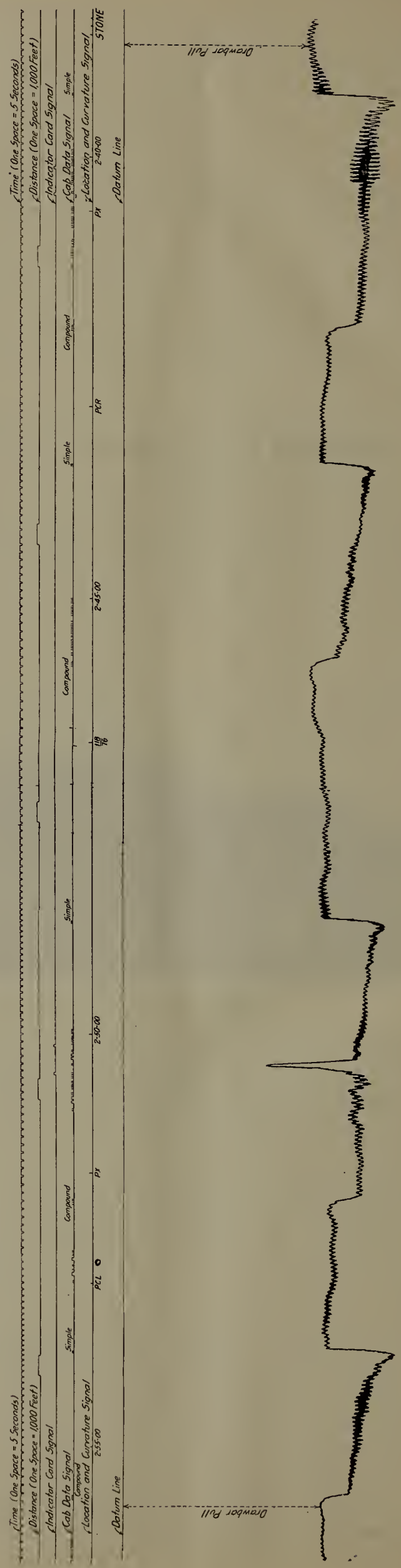

Portion of Dynamometer Chart Showing Results of Simpling Feature of Mallet Locomotive, New York Central Tests.

tions which they replaced. This increase is not theoretical; but as good and even better results are realized in actual service as the comparison in Table No. 3 shows.

The test of the original trial engine, from the results of which the adoption of the Mallet locomotive for road service on the Pennsylvania division directly followed, was the first thorough and complete test of this type of locomotive. The management of the New York Central & Hudson River R. R. invited both the American Locomotive Company and the Pennsylvania R. R. to assist in making the test, the aid of the latter being of a special value because of its well known wide experience in work of this character. A committee composed of one expert from each of these three companies was appointed and the test conducted under their personal direction.

The three primary objects of the test were to determine the capacity and economic performance of the Mallet locomotive; to discover what modifications in design, if any, were needed to develop it to the highest efficiency for the service for which it was intended and to determine whether the Mallet locomtive could be operated at maximum speeds of 30 miles per hour for protracted periods without injury to track or locomotive.

Of the consolidation locomotives selected for comparison with the Mallet, one was a New York Central class G. 6. G. and the other :: Pennsylvania class H. 8. B. Each represented the best design of the type on its respective road.

Following the completion of the final tests, the committee reported the following conclusions as to the advantages of the Mallet:

"Economy in train operation due to larger output in ton-miles per locomotive."

"Greater economy in coal per unit of power due to the larger boiler available, and especially to the use of compound cylinders and superheated steam."

"Judging from the construction of the parts of this locomotive and its riding qualities with the ability to take curvatures as represented on the division over which the tests were made, there would seem to be no reason to expect any undue injury to the locomotive itself when running at a speed of 30 miles per hour.

"On return trips from Stokesdale, a number of the runs were made at speeds which would indicate that 30 miles per hour would not be at all detrimental to the locomotive itself."

"As to injury to the track at speeds of 30 miles per hour, the weight per axle for the Mallet locomotive is very much below that which is common practice with passenger locomotives, where as high as 60,000 pounds per axle is often employed and from this standpoint, it is considered that no undue injury would be occasioned to the track suitable for consolidation locomotives similar to the G. 6. G. with a locomotive of this type."

In all, the tests extended over a period of two months and a half, and like the Norfolk & Western tests described on page 452, October issue of the *Railway Master Mechanic*, gave, in an exceptional degree, a complete and accurate basis for analyzing the effect of the separate features of the design on the economic performance of the locomotive as a whole.

As a comparison between the modern up-to-date powerful freight locomotive and the most approved design of, say five years ago, for the same class of service, it is an important contribution to locomotive data, and shows the remarkable improvement toward economy in operation that has been successfully accomplished in locomotive design during the past few years.

The two consolidation locomotives were so similar in design that the average of the results obtained with both, in comparison with the records of the Mallet, serve as an accurate measure of the relative efficiency of the three designs.

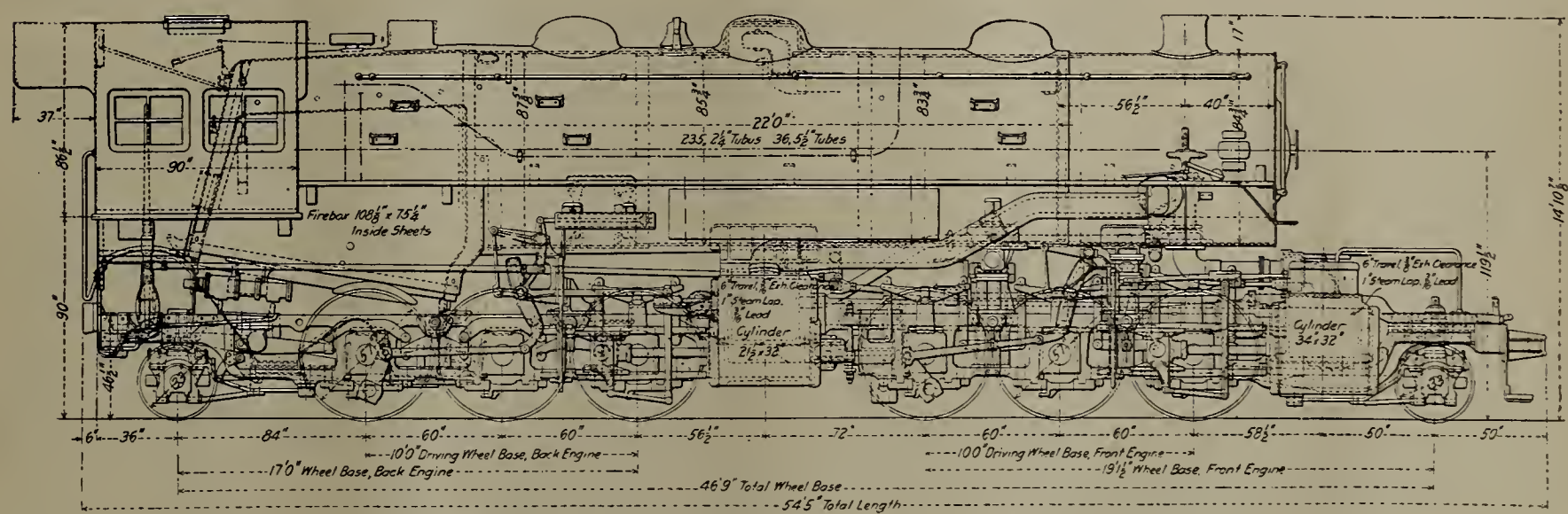

Elevation, Mallet Compound Locomotive, N. Y. C. & H. R. R. R.

The Mallet locomotive had approximately 47 per cent more total weight and 44 per cent more weight on driving wheels than either of the consolidation.

All tests were made over the portion of the road from Avis yard, Jersey Shore, to Stokesdale Junction, Pa., a distance of 63.07 miles. Reference to the profile illustrated will show the grades and curves. The runs for all locomotives were confined exclusively to the northbound movement, the engines being turned at Stokesdale Junction and returned light to Avis. Descending grade from Stokesdale to Corning, the end of the division, made a continuance of the run through to the latter point unnecessary.

All observations were begun at Torbert 4.24 miles north of Avis. This made it possible to occupy this distance to get the locomotive in good running condition and the fire built up ready for taking observations.

From the profile, it will be seen that the remaining distance of 58.83 miles from Torbert to Stokesdale Junction is entirely ascending grade, with the exception of about 4.5 miles of level track distributed over six places; and 1.19 miles of descending grade occurring at two points.

As nearly as possible, all the runs of the Mallet in the second test were made under the same conditions as those in the first. The same crew operated the lomomotive and the weather and rail conditions were approximately the same.

Fuel.

The coal used in both tests was good and of uniform quality. By far the greater proportion came from the

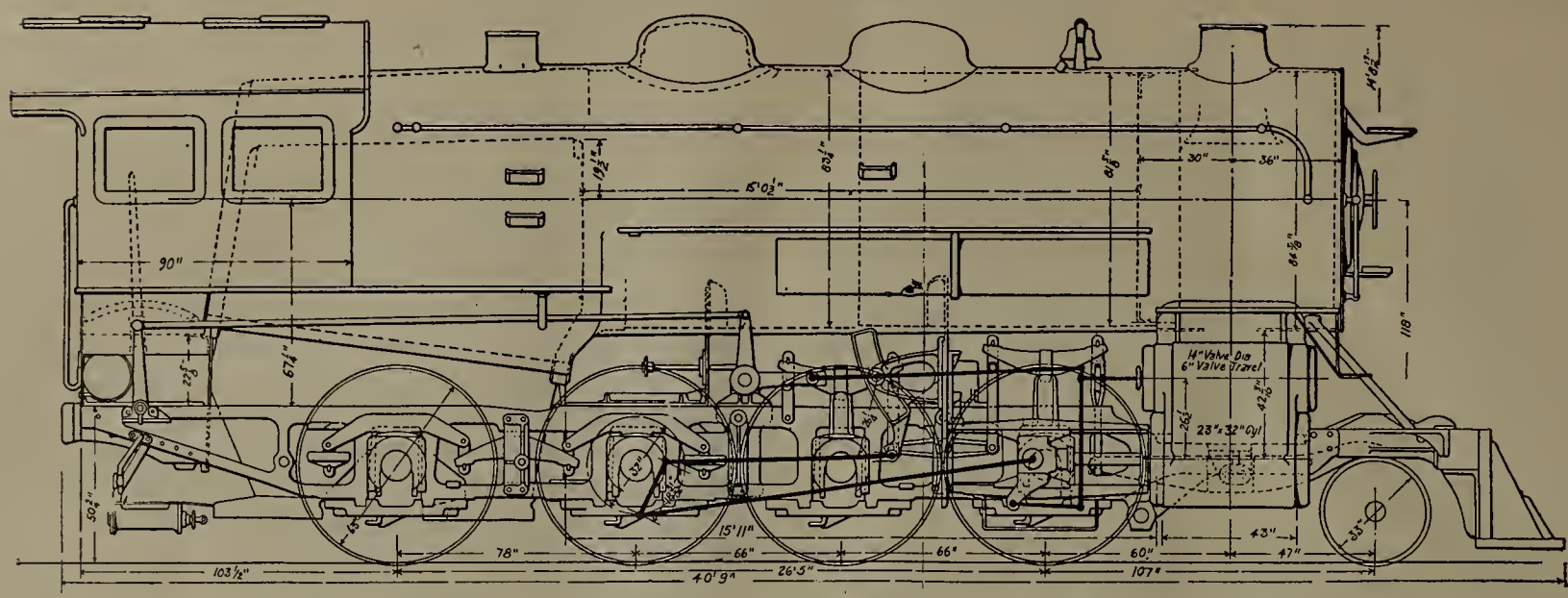

Elevation of New York Central Consolidation Locomotive.

same mines. The average of the samples analyzed showed:

Volatile matter	25.26 %
Fixed carbon	64.28 %
Ash	10.44 %
Moisture	3.444%
Sulphur	1.922%
B. T. U. (Dry coal)	13802

General Performance.

The most important comparison shown in Table No. 2 is the saving of 39.6 per cent in coal burned per ton-mile in favor of the Mallet.

This is very little higher than the average of 35 per cent which, as previously mentioned, is secured in actual daily service. The significance of the economy in fuel per unit of work done effected by the Mallet when expressed in commercial values is strikingly brought out by the comparison in Table No. 3.

From these figures, it will be seen that because of the saving of 39.6 per cent in the fuel consumed per ton-mile, the Mallet makes, at the minimum, 61.2 per cent more ton-miles than the consolidations on the same amount of coal.

Another interesting fact shown in Table No. 2 is that, with the range of speeds in which it is operated in actual service, the increase in the normal theoretical maximum tractive power of the Mallet as compared with the simple locomotives is fully realized at the draw bar. With a theoretical tractive power 45 and 47 per cent greater respectively, than the New York Central and the Pennsylvania consolidation locomotives, the Mallet hauled approximately 49 per cent more tonnage then the average of the two at approximate speeds of 12½ miles per hour. On these runs, both consolidation locomotives were loaded to their full capacity.

At approximate speeds of 15 miles per hour, the Mallet shows a still greater relative hauling capacity. In this case, however, it is possible that the consolidation locomotives did not have the maximum tonnage they could handle at that speed.

The records for the lower speed may consequently be most conservatively taken as an accurate measure of the relative hauling capacities of the three classes of locomotives in slow speed drag service.

One run of the series was made to determine the maximum train load that the Mallet locomotive would haul over the division without stalling. The locomotive was given 63 steel cars and a caboose, making a total load of 4,465 tons behind tender.

This run demonstrated clearly the advantage of the reserve capacity available with the system of compounding which makes it possible to secure an increase of 20 per cent in power by the use of steam direct from the boiler in both the high and low pressure cylinders, the separate exhaust from the high pressure cylinders and the intercepting valve.

By means of these special devices, the back pressure on the high pressure cylinders is reduced when working simple and the increased power is secured without sacrificing the equal distribution of the work between the two engines. With this reserve power to use in a pinch and get the train over the critical points an otherwise prohibitive train load was taken over the division without stalling. The hardest portion of the line was from mile posts 123 to 118, and simpling was resorted to at a number of critical points. By the same means, the hard pull north of Cedar Run was successfully accomplished. The total amount of the time during which the locomotive was simpled was approximately

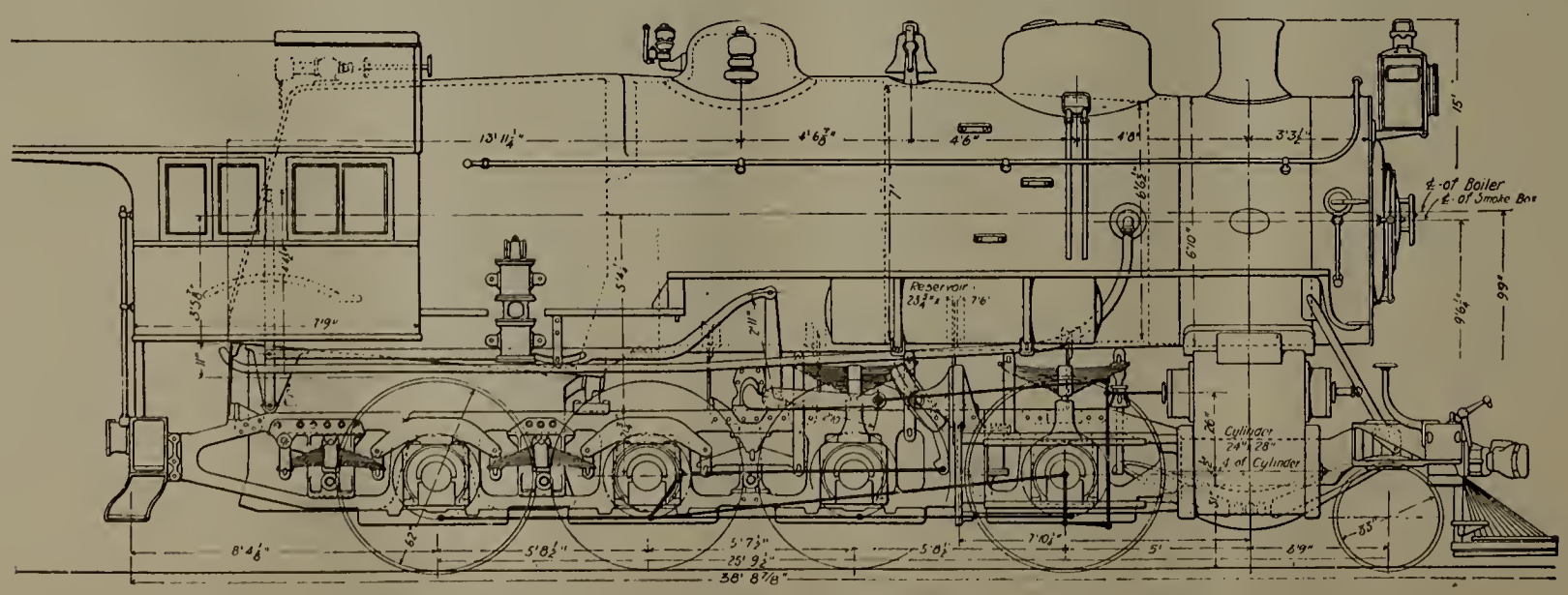

Elevation of Pennsylvania Consolidation Locomotive.

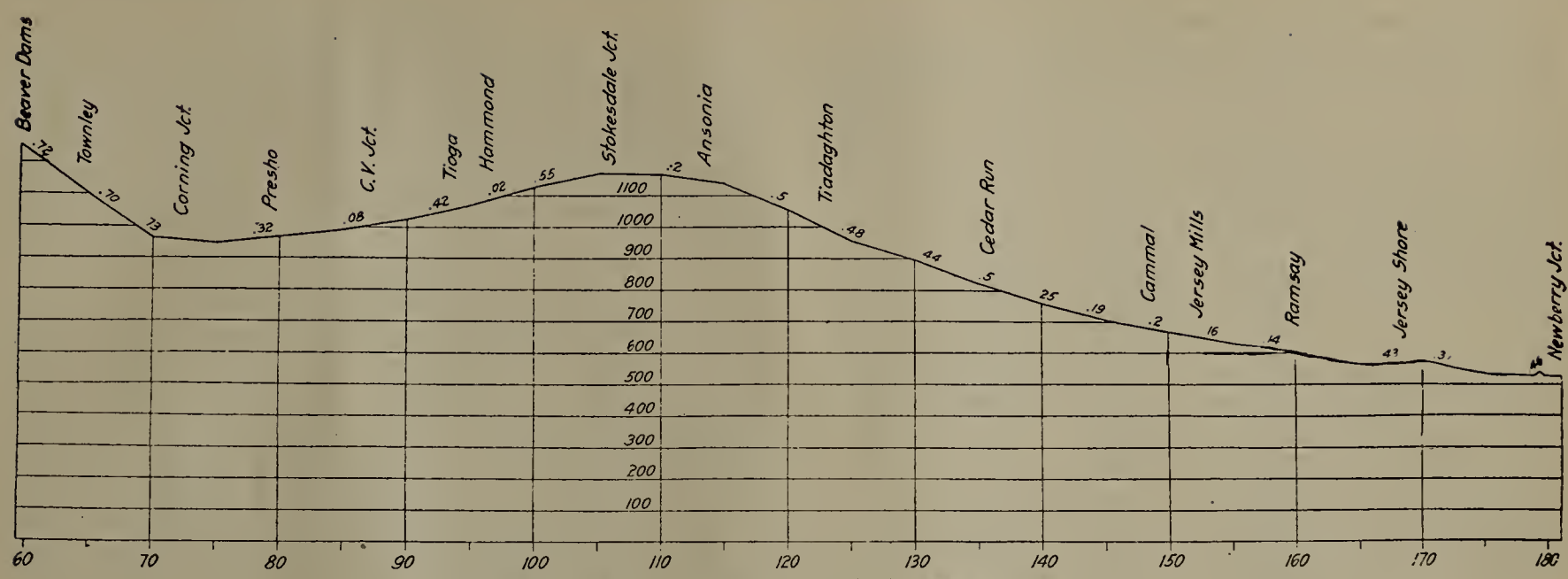

Profile of Part of Division on Which Tests Were Run.

8 per cent of the time the throttle was open; and an average speed of 10.6 miles per hour was made.

On many roads, short grades on a division, though not of sufficient importance to warrant pusher service, necessitate, nevertheless, the reduction of 500 tons or more in the maximum train load which could otherwise be taken over the division.

With the increase of 20 per cent in power, actually available in Mallets for such emergencies these critical points can be surmounted and so much through tonnage gained.

Table 1.—General Dimensions of Locomotives Tested.

	N. Y. C. Consolidation. Class G.6.G.	P. R. R. Consolidation. Class H.8.B.	Mallet as Modified in Second Test.	Mallet as Finally Ordered.
Maximum tractive effort, lbs....	45,700*	45,300*	66,600	67,500
Maximum tractive effort (working simple) lbs.	.....	.....	79,900	81,000
Wt. on driving wheels, lbs.....	211,000	211,700	304,500	301,500
Wt. on leading truck, lbs.....	25,000	26,900	25,000	26,000
Wt. on trailing truck, lbs.....	.....	.....	22,500	26,500
Wt., total of engine, lbs.....	236,000	238,600	352,000	354,000
Wt. of tender, lbs.....	147,400	158,000	152,700	153,700
Wt., total of engine and tender, lbs.	383,400	396,600	504,700	507,700
Wheel base, rigid, ft. and in....	17- 6	17- ½	10-0	10-0
Wheel base, driving, ft. and in..	17- 6	17- ½	30-8½	30-8½
Wheel base, total of engine, ft. and in.	26- 5	25-9½	46-4	46-9
Wheel base, total of engine and tender, ft. and in.....	60-11½	59-5⅝	74-8	75-8
Cylinders, diameter, in.....	23	24	20½ & 33	21½ & 34
Cylinders, stroke, in.....	32	28	32	32
Wheels, diameter of driving, in..	63	62	57	57
Wheels, diameter of truck, in....	33	33	33	33
Wheels, diameter of trailing, in..	..	..	33	33
Wheels, diameter of tender, in..	33	36	33	33
Boiler pressure, lbs. per sq. in...	200	205	210	200
Boiler, type	St. top	Belpaire	St. top	St. top
Boiler, outside diameter, in.....	82	80	83¾	83¾
Firebox, length, in.....	108⅛	110¼	108⅛	108⅛
Firebox, width, in.....	75¼	72	75¼	75¼
Tubes, number	446	465	235—2¼ 36—5½	235—2¼ 36—5½
Tubes, diameter, in.....	2	2	2¼ & 5½	2¼ & 5½
Tubes, length, ft. and in.....	15-½	15.0	22.0	22
Heating surface, tubes, sq. ft....	3,512	3,665.91	4,168	4,168
Heating surface, firebox, sq. ft...	184	181.0	185	197.9
Heating surface, water tubes, sq. ft.	27	..	13	27.1
Heating surface, total, sq. ft....	3,702	3,846.91	4,366	4,393
Superheating surface, sq. ft.....	...	....	966.3	966.3
Grate area, sq. ft.....	56.5	55.05	56.5	56.5
Tender, water capacity, gals....	7,500	7,000	8,000	8,000
Tender, coal capacity, tons.....	12	17½	12	12

*Calculated on the basis of a mean effective pressure of 85 per cent. of the boiler pressure.

Boiler Performance.

The comparison in Table No. 4 emphasizes the advantage in fuel economy of the large boiler with ample margin of capacity above the average demands on it.

At approximately the same rate of combustion, the Mallet gave an increase in equivalent evaporation per pound of coal varying from a maximum of 18.8 per cent to a minimum of 13.58 per cent.

In the thermal efficiency of the boiler, the Mallet showed a distinct superiority over the consolidation locomotives ranging from a maximum of 17.7 per cent to a minimum of 13.62 per cent.

Performance of Locomotives as a Whole.

The true and absolute measure of the relative economy in coal consumption of two locomotives is the comparative amount of dry coal burned per dynamometer horse power per hour. In such a comparison, local conditions, such as profile and variation in train loading are eliminated.

On this basis, Table No. 5 shows an economy in fuel in favor of the Mallet, ranging from a maximum of 39.8 per cent, at speeds of 12½ miles per hour, to 34.4 per cent at 15 miles per hour.

The comparatively low figures for the machine friction of the Mallet, which were verified by a subsequent test made

Table 2.—Comparison of General Performance of Mallet and Consolidation Locomotives Under Different Speed Conditions.

	Approximate average speeds.	Type of Locomotive. 2-8-0	2-6-6-2	Per cent. in favor of Mallet as compared with consolidations,
Number of cars.....	12.5	41.5	65.3	57.3
	15.0	36.7	58.2	58.6
	17.5	....	40.	....
	21.0	25.5	....	....
Average weight per car, tons	12.5	60.15	57.2	....
	15.0	55.12	59.5	....
	17.5	.....	64.7	....
	21.0	60.47	....	....
Total tonnage behind tender.	12.5	2,495.5	3,734	49.6
	15.0	2,017.5	3,461	71.5
	17.5	.....	2,588	....
	21.0	1,542	.....	....
Total elapsed time, hours....	12.5	5.89	6.86	....
	15.0	4.65	5.00	....
	17.5	3.51	4.51	....
	21.0	....	....	....
Running time, hours.....	12.5	4.605	4.58	....
	15.0	3.765	3.87	....
	17.5	.....	3.37	....
	21.0	2.82	....	....
Average speed, running time, m.p.h.	12.5	12.75	12.9	....
	15.0	15.7	15.2	....
	17.5	....	17.5	....
	21.0	21.4	....	....
Coal per ton-mile, lbs.....	12.5	0.1275	0.077	39.6
	15.0	0.1392	0.084	39.6
	17.5	.....	.....	....
	21.0	0.1418	0.086	....

*This relatively higher percentage in favor of the Mallet is probably due to the fact that the consolidations were not loaded to their full capacity at 15 miles per hour.

Table 3.—Comparative Performance in Ton-Miles Per Ton of Coal of Mallet and Consolidation Locomotives.

Approximate average speeds.	Ton-Miles Per Ton of Coal. 2-8-0 Type.	2-6-6-2 Type	Per cent. in favor of Mallet as compared with consolidations.
12.5.....	16,219.5	26,610	63.9
15.0.....	14,807.5	23,872	61.2
17.5.....	.....	23,148	....
21.0.....	14,898	.....	....

TABLE 4.—COMPARISON OF BOILER PERFORMANCE OF MALLET AND CONSOLIDATION LOCOMOTIVES.

	Approximate average speeds.	Type of Locomotive. 2-8-0	2-6-6-2	Per cent. in favor of Mallet as compared with consolidations.
Dry coal fired per hour	12.5	4,033.5	3,680	....
	15.0	4,420.5	4,423	....
	17.5	.....	3,985	....
	21.0	4,957	.....	....
Equivalent evaporation per hour, lbs.	12.5	33.957.5	36,849	8.5
	15.0	36,807.	41,819	13.6
	17.5	.....	36,203	....
	21.0	39,859.5	.....	....
Equivalent evaporation per pound dry coal	12.5	8.42	10.01	18.8
	15.0	8.32	9.45	13.58
	17.5	....	9.08	....
	21.0	8.04	....	....
Equivalent evaporation per hour per sq. ft. of heating surface, lbs.	12.5	10.15	9.32	....
	15.0	11.008	10.58	....
	17.5	.....	9.16	....
	21.0	11.914	....	....
Coal fired per sq. ft. grate per hour for time throttle was open	12.5	72.34	65.13	....
	15.0	79.26	78.28	....
	17.5	.....	70.54	....
	21.0	88.91	.....	....
Boiler horsepower	12.5	984.25	1,069.1	8.6
	15.0	1,066.9	1,212.1	13.6
	17.5	.....	1,049.4	....
	21.0	1,155.35	.....	....
Temperature in smokebox	12.5	616.	519.	....
	15.0	633.	522.9	....
	17.5	....	495.2	....
	21.0	633.5	.....	....
Temperature in firebox	12.5	1,805.5	1,742	....
	15.0	1,783.5	1,936	....
	17.5	.....	1,785	....
	21.0	1,868	.....	....
Thermal efficiency of boiler, per cent.	12.5	58.68	69.07	17.7
	15.0	58.63	66.62	13.62
	17.5	....	68.60	....
	21.0	57.51	.....	....

TABLE 5.—COMPARISON OF PERFORMANCE AS A WHOLE OF MALLET AND CONSOLIDATION LOCOMOTIVES.

	Approximate average speeds.	Type of Locomotive. 2-8-0	2-6-6-2	Per cent. in favor of Mallet as compared with consolidations.
Average speed running time, miles per hour	12.5	12.75	12.9	....
	15.0	15.7	15.2	....
	17.5	....	17.5	....
	21.0	21.4	....	....
Average drawbar pull, lbs.	12.5	22,726	34,071	49.9
	15.0	19,883	31,360	56.9
	17.5	.....	23,424	....
	21.0	15,930	.....	....
Maximum starting drawbar pull, lbs.	....	46,280	66,000 working compound	42.6
			80,000 working simple	72.8
Machine efficiency, per cent.	12.5	88.85	89.21	....
	15.0	86.17	89.16	....
	17.5	.....	86.60	....
	21.0	85.35	.....	....
Machine friction in lbs. of drawbar pull	12.5	3,066.5	4,468	....
	15.0	3,517.	4,083	....
	17.5	.....	4,044	....
	21.0	3,288.5	.....	....
Dry coal per dynamometer horsepower per hour, lbs.	12.5	5.235	3.15	39.8
	15.0	5.295	3.47	34.4
	17.5	.....	3.65	....
	21.0	5.465	....	....
Water per dynamometer horsepower, lbs.	12.5	33.465	26.80	22.9
	15.0	33.56	26.83	20.05
	17.5	.....	27.08	....
	21.0	33.685	.....	....
Thermal efficiency of locomotive, per cent.	12.5	3.50	5.59	59.7
	15.0	3.50	5.32	52.0
	17.5	....	5.43	....
	21.0	3.445	....	....

by hauling the locomotive with an electric locomotive, are of interest.

They reflect the advantage in the Mallet type of construction of the reduction in the unit weight on the moving parts and the shorter rigid wheel base.

In spite of the greater number of journals and moving parts, the Mallet showed a higher machine efficiency than the consolidation type.

These tests demonstrated the advantages of the Mallet in road service over the existing power on the division and determined its adoption by the railway officials in confidence of the wisdom of their decision and enabled them to specify the particular design which would secure the best results under the operating conditions. Moreover, it proved that as a road engine, the Mallet properly designed is not limited to only slow speed drag service.

Acknowledgment for the data in this article is hereby given the American Locomotive Co., 30 Church St., New York, N. Y.

FIRE FIGHTING ENGINES.

At its Chicago yards, the North Western has a switch engine equipped to fight small fires. Hose is carried in a box on the running board and connection is made to the boiler injector pipe. A similar arrangement has been perfected on the Missouri Pacific by W. R. Barton, fire prevention inspector. The Missouri Pacific engines carry 50 ft. of 1¼ in. steam hose on a reel under the running board of the engine. Steam hose is used, as the water which comes from the tank and is forced through the branch pipe is very hot, and in a short time would destroy the ordinary rubber hose. The connection is placed on the branch pipe between the boiler check and injector. When an engine reaches the scene of a fire in the yards a switchman jerks the hose from the reel and attaches it to the coupling leading from the branch pipe, and the engineer starts the injector, while the fireman goes out on the running board and opens the valve in the branch pipe leading to the boiler check. The cost of the apparatus installed is about $35.

At a recent test of the apparatus in the St. Louis yards a stream of water was thrown 65 ft. in the air with 200 lbs. of steam pressure on the boiler. It was such a success that all of the yard engines on the entire system are to be equipped with it. Many disastrous fires in railroad yards are caused by the difficulty encountered by the city fire apparatus in getting close to the blaze and by equipping switch engines in this manner, a number of valuable minutes should be saved in getting to the scene. This is especially true in large yards. In smaller yards it should also be valuable because it supplies an additional source of fire protection which is often much needed.

ASSOCIATION OF RAILWAY ELECTRICAL ENGINEERS.

The fourth annual convention of the Association of Railway Electrical Engineers was held at the Hotel La Salle, Chicago, on November 6 to 10. Although this association is comparatively young, it is one with a bright future because of the increasing importance of electric operation, and the 1911 convention was entirely successful. The attendance was not large but the subjects were handled and discussed in a very efficient manner and those in attendance received a maximum amount of benefit. Among the subjects reported by the committees were "Shop Practice," "Train Lighting Practice," and "Illumination."

The entire ball room floor on the 19th floor was given over to the exhibit of the supply men and consisted of thirty booths. This exhibit was very comprehensive and due to the use of various lighting effects, it was very attractive and artistic. The following officers were elected for the coming year: President, F. R. Frost, electrical engineer on the Santa Fe at Topeka, Kan.; first vice-president, D. J. Cartwright, electrical engineer, Lehigh Valley, Phillipsburg, N. J.; second vice-president, C. R. Gilman, chief electrician, C. M. & St. P., Milwaukee, Wis.; secretary, Joseph Andreucetti, assistant electrical engineer, C. & N. W., Chicago. The semi-annual meeting is to be held at Atlantic City next June on the day before the opening of the Master Car Builders' convention. The next annual meeting will be held at Chicago.

SWEDISH STEELS*

By A. R. Roy.

Within the century one finds that steel was being made all over Europe, in Spain, Italy, Germany, France, Austria and England. Spanish steel was considered the best for armors and sharp instruments required for violent usuage. They hid the process of their manufacture with a great secrecy. Even to-day nothing certain is known about that process. However, a recent analysis of a piece of armor made of Toledo steel showed traces of tungsten. Perhaps this was their whole secret, the accidental introduction of tungsten in the process of manufacture. And they attributed the quality of the steel to the process instead of the tungsten, about which there is no evidence of their knowledge. One must not forget that science, as we understand it, is the offspring of but yesterday.

While Spain had been spreading her reputation for her wonderful steel all over Europe, other countries were not idle. France and Germany were making progress in the manufacture of steel, but they appear to have confined themselves to the manufacture of natural steel, as identified from steels made out of imported irons and artificial mixtures. England, too, was very active in this industry. She was making and buying a lot of iron and steel but keeping it all to herself. Dating as far back as Edward the Third one finds laws against the exportation of iron and steel of any kind, whether of indigenous or foreign origin. The penalty was a fine in double the measure of the amount of material exported.

England began gaining celebrity for her manufacture of steel for tools, knives, cutlery, etc., only at a later date.

History does not tell us when steel manufacturers began to use Swedish iron, but research would further the belief that their reputation was coincident with the employment of Swedish iron for their steel. In fact we do not find a standard in the quality of any steel in any produced in Europe until the mention of the use of Swedish iron as a factor.

In 1740 Huntsman perfected his process of manufacturing cast steel. It is remarked in a curious pamphlet, now preserved at Wortley Hall, that Huntsman used the purest Swedish iron from the Dannemora mines, which had been discovered in 1448. By the use of this steel and his process Huntsman substituted, in England, the use of Wootz steel, made in India, which was bought before his time at the extraordinary price of five guineas ($30.00) a pound, for making dies for coins and for other uses where a steel was necessary of uniform quality and toughness.

After Huntsman, the Sheffield cutlers and steel manufacturers used a large quantity of Russian iron, bought from the Ural mountains, as well as Swedish steel for other work. They used the Russian iron for an inferior quality of steel, but the Swedish was used for the very best work they had.

When Bessemer perfected his process the use of Russian steel fell off completely. Nothing but Swedish iron was used and this, says J. S. Jeans, is the cause of Sheffield's celebrity for tool steel. He says, in manufacturnig tool steel of the highest quality, Bessemer found it preferable to use the best Swedish pig iron.

That it was recognized in England that Swedish iron was the best base for making the highest grade of steel is shown by a patent taken out by Joseph John William Watson in January, 1853. His patent was worded: "For producing carburization in soft iron to form steel and carburized iron, whereby common English iron may be as readily converted as the finest Swedish iron." Now, this shows that as early as 1853 the manufacturers of steel had come to the conclusion that there was no iron better than Sweden's product for the manufacture of high grade steel.

But we have seen that as far back as 1750 this truth had been slowly forcing itself into the minds of steel manufacturers. The only iron indeed that came into competition at that time with Swedish iron in the English market prior to the introduction of the Bessemer process was that imported from the Ural in Russia.

Turning again to the continent of Europe, we find that the steel manufacturers of France, especially in the district of St. Etienne, employed Swedish iron for their product up to 1850. The steel from these mills was considered the best in France.

It will be recognized by these facts quoted above that Swedish iron really is the best base for the manufacture of steel and it has been recognized as such for a long time. Not only that but there has not yet been found any other iron to substitute this product of Sweden. There are many countries richer than Sweden in the luxuries of life, but no country, at least in Europe, equals Sweden's wealth in iron, and of such a quality. Sweden knows it and has made iron manufacturing one of her main industries since the beginning of the 14th century.

In 1784 there existed in Sweden 495 foundries, 599 large hammers, 971 small hammers, and the produce for that year was 40,600 tons, a large quantity of which was devoured by England and the Continent of Europe. Since then there has been a reduction in the number of foundries but an increase in the output. Great Britain, alone, in 1902, bought 173,726 tons of Swedish iron for her manufactories. Germany bought more than four times that amount.

Consul McGregor reports there are individual deposits in certain districts "with not many equals in size in Europe or America." He computes in figures that run into billions of tons the amount of ore above the level of the lakes, besides incalculable quantities below that level. The country is divided into districts, one containing richer ore than another.

Now, having established the fact that Swedish iron is the best, and Sweden has an enormous quantity of iron still unworked, a quantity that will last them at the present rate of consumption for several centuries, the questions arise:

1st: Why Swedish iron is the best?

2nd. Why does not Sweden export more steel, enough to overwhelm the English outputs?

3rd. Why Sweden allows other countries to gain money and celebrity by the use of her raw materials?

Now let us examine these questions in order:

Swedish iron is the best; 1st. Because nature gave Sweden the best iron ore in the world. Examining this fact, it is noticeable that the best quality of Swedish ore is dependent largely on the environment that it is buried in. It would appear that the chemical amalgams inherent in the ore in the state of nature are such that when the ore is worked it imparts to the final product qualities not to be found in other irons, although much of this amalgam is apparently eliminated in the process of manufacture. The most recent discovery appears to be that vanadium is found present in the natural ore. Analysis of Swedish iron shows no trace of vanadium. It is possible that in the furnace the heat eliminates all trace of vanadium, but not before it has imparted to the iron the purity that makes the ore of Sweden so famous.

2nd. Charcoal, the purest fuel, is used in Sweden of necessity, as Sweden has no coal beds of her own. It may be unfortunate for the wealth of Sweden's iron masters that

*From a paper read before the New York Railroad Club.

there is no coal handy for use, but it is a decided advantage to the world in general. Could Sweden use coal in her furnaces the chances are that the quality of her iron would deteriorate. Charcoal is practically the only fuel that is used. In fact the laws of Sweden allow no mines to be opened unless there is a forest in the neighborhood large enough to supply the charcoal required for manufacture. The laws further protect the manufacturer by giving him the sole right to a certain amount of sylvan fuel in proportion to the size of the mine he operates. To make this clearer, suppose a family with the right to the charcoal supply of a forest is divided by any contingency, the law gives to the man who operates the mine, although he might have only a small interest in the whole property, the sole right to all the fuel of the forest assigned to his mine. These laws insure the use of charcoal for the making of iron. By using charcoal the gases that are impregnated into the molten fluid steel by the employment of coal or coke are completely avoided. Naturally, a steel is produced that is much purer than any that can be made with coke or coal, as is the custom in other countries. Further, large quantities of iron ore never produced at a time. The largest converters have a capacity of not more than 2½ to almost 12 tons, while in America and England there are converters with treble the capacity. The consequence of this is that greater care is taken in the manufacture and there is a more even quality and homogeneity in the steel produced for the simple reason that it is easier to boil more thoroughly a small quantity of matter than a larger one—and boil it evenly through and through.

3rd. Because greater care is taken in Sweden in manufacturing. The use of charcoal necessarily prohibits production on a large scale; therefore, quality not quantity is Sweden's principal aim. It has just been mentioned above that Sweden manufactures in small quantities and here is the reason for it. It is not possible to procure very large quantities of charcoal because the forests are naturally limited, so they are obliged to use small quantities and with great care. They have to make the most of what they have got. It is the law of self-preservation. Not only have they to make the most of the little they possess, but they have to be economical. Charcoal is not so cheap as coal. A few blasts down in the cavities of the earth will produce a few hundredweights of coal; but it means much more labor in producing a basketful of charcoal. A tree has to be cut, the wood has to be dried, and then it has to be burned with care by men skilled in the making of charcoal, for the wood must not be burned too much, before a basketful of charcoal can be put on the market. All this means time and labor and the two together make capital.

Here, then, are the three great reasons for the superiority of Swedish iron.

It may be remarked that much time has been spent in the recapitulation of the history of Swedish iron to prove the superiority of the ore in Sweden, when the fact is well known to every worker in steel. We have all learned in school the multiplication table, as high perhaps as 20 x 20, but, it would be interesting to know how many people are able to repeat this learning without hesitancy.

For instance let us project the questions:

Why has Swedish iron sold for many years for about double the price of other irons?

What is the connection between iron and steel?

What constitutes body in tool steel and how does it get there?

Facts in the prospective are generally blurred to the mind's eye and one cannot impress too strongly on the mind that Swedish iron is the very best base that can be used for a steel that will perform any kind of work requiring the highest grade in quality.

Why Sweden has allowed other countries to use its ore in the manufacture of steel without taking advantage of it, is explained by the fact that it was cheaper and more profitable to sell the iron because of the limited supply of fuel, than to make steel which would compete unfavorably in price with the steel of other countries.

It is a well known fact that up to a very recent period foreign capital was not employed in this industry of Sweden on account of the disfavor with which the Government and the people regarded it. This has in many ways handicapped the steel industry in Sweden. It also accounts for the small mills in the country which can put forth but a limited supply. But Sweden is now beginning to exploit her products of steel in countries hitherto untouched. She has found a large market in America. The Americans appreciate the quality of Swedish steel, but up to lately there had not been any man or firm enterprising enough to invest the capital required for stocking Swedish steel in America.

One of the greatest disadvantages of using Swedish steel in America has been the difficulty of getting large quantities of steel from that country in a hurry on account of the unfavorable transport facilities. The steel from Sweden has to be shipped to some foreign port from where it is forwarded to American ports. It will be readily seen that manufacturers requiring large quantities of steel for immediate use cannot afford to wait two or three months to get the steel, which, they may be convinced, is the best for their purpose.

One of the officers of a manufacturing firm of national reputation a short time ago at a discussion of the adoption of Swedish steel in the factory made the following remark:

"You know what it means to buy imported steels, and you know what happens when you are held up three or four months because they run short of a certain size of steel. If you can get nearly as good results from some steel you can depend upon obtaining when you want it, buy that particular steel but don't get tied up with a source of supply three or four thousand miles away and lose business because you cannot build machinery."

But in America we have progressive men, men whose minds are capable of undertaking daring enterprises, and a company has been formed (the Swedish Iron & Steel Company) which carries in the port of New York, a stock of Swedish steel, amounting to 4,000 tons ready for shipment at any time. None will deny that this, perhaps, is the largest stock carried by any individual firm in any part of the world. In this way one of the chief objections against Swedish steel in America has been removed. Firms of old reputation are still somewhat backward in taking advantage of this fact because they have been accustomed to use steels made by well established firms who claim superiority for their products on account of secret processes, mysterious compositions, etc.

To-day there is little in the manufacture of steel that is hidden from the public eye. There are no more secret processes. The analytical skill of chemists has completely removed the pretension of mysterious ingredients. One has only to take a piece of steel but three inches long to a chemist and he in a few days will be able to report, with an exactness that is marked by decimal points, on the various ingredients and proportions of elements in the composition of the steel.

The superiority of steel to-day consists not in the process or the various factors in its composition but in the iron base that is used in its manufacture.

There is another disadvantage in buying Swedish steel that cannot reasonably be overlooked, namely that it is sometimes difficult to buy the very best steel that is produced by that country. In Sweden, as in other countries, there are various grades of ore from which the steel is

made and advantage of this fact is taken by many importers. Iron ore has been brought into the country and converted into steel in coal or coke furnaces instead of charcoal furnaces as in Sweden. Therefore, the only thing Swedish about this home-made Swedish iron is that it contains Swedish ore lacking the charcoal fuel and the Swedish treatment—the all important factors that have raised Swedish iron to the pinnacle of quality and efficiency.

trough to the engine pit forms. The only closed pipe used was the last thirty feet or so which was attached to the end of the trough with a sort of swivel joint which, together with telescopic action with the end sections of pipes, allowed any point in the pits to be reached without trouble. About 125 to 150 yards per day was the average throughout the larger part of the job, which consisted of putting in a total of about 8,000 yards of concrete.

Entrance to Roundhouse, Pere Marquette R. R., Grand Rapids, M ich.

GRAND RAPIDS ROUNDHOUSE, P. M. R. R.

A forty-three stall roundhouse for the Pere Marquette at Grand Rapids, Mich., has just been completed by the contractor, Houser-Owen-Ames Co. The job was started on May 1. The diameter of the house is 386 feet and it is served by an 85-foot electric table made by the King Bridge Co. The building is built of reinforced concrete and one of the illustrations shows the job after it had been under way about six weeks. Two tracks were run into the building, separated enough to allow room between them for concrete mixer, hoisting engine, tower, etc., and so that cement cars could be placed on one side of the mixer and gravel cars on the other. It was necessary to have considerable track room as nearly a car of cement and about four or five cars of gravel were used per day. The gravel was unloaded with a William's single line one yard clam shell dumping directly from the cars into the storage bin back of the mixer, and there was no trouble in handling the gravel faster than it could be used.

The concrete was all hoisted in a concrete bucket and dumped into a bin built at the top of the tower. From this point it was distributed by means of an open sheet-iron

The building contains about half a million brick and about six hundred thousand feet of lumber, there being altogether in the neighborhood of six hundred cars of building material used on the job, aside from some twenty thousand yards of gravel filling inside the building between pits to bring the site which was quite low up to the proper level.

The photograph taken at the entrance to the house shows a small addition on the right of the tracks which is for tool room, toilet and locker rooms and roundhouse foreman's office. Previous to the construction of this roundhouse the Pere Marquette was using a 24-stall house with an electric transfer table. This is now being remodeled for an addition to the shops by taking off a large part of the roof, and putting in steel columns and trusses.

An article in Engineering (of London) on crane specifications speaks of voluminous specifications drawn up with great care and expense but which are often hazy on basic requirements. As a violent contrast it mentions an inquiry which reads as follows: "Please quote us for a crane to lift five tons—must be stout." Surely being "stout" is an essential requirement in a crane.

Construction View of Grand Rapids Roundhouse, Pere Marquette R. R.

LARGEST TANK CAR EVER CONSTRUCTED.

The Chicago Steel Car Co. exhibited the largest oil tank car ever built, at the Illinois Central Station, Chicago, during the week ending November 4th. Prominent railroad men and tank car operators were invited to inspect this car and a large number took advantage of the opportunity. It has a capacity of 14,650 gallons, but on account of its unique design the ordinary 50-ton M. C. B. truck is sufficient to carry the structure and load. Its construction is on original lines, which are a wide departure from present accepted standards, combining simplicity and fewer parts in such a manner that it insures durability and low cost of upkeep.

To the casual observer the car is not of extraordinary size, being a few inches higher than the standard 8,000 gallon car, while the length over all is increased but little. One of the striking features which appeals to the operating man is: light weight for large capacity, practically 72 per cent of the gross weight is revenue bearing. The low center of gravity enables the cars to ride easily on rough and uneven track without damage and with less flange friction than with ordinary cars. It is estimated that the car will withstand a buffing force greater than would be the case with ordinary construction. The heavy bottom sheet receiving the major portion of impact has a sectional area of more than double the M. C. B. requirements of an underframe car and lies below the line of draft. By special arrangement of front section of bottom sheet, which acts as a tension member to the section between body bolsters, the rivets holding the bottom center sheet to the body bolster and which receive the buffing force, are protected from the liquid contents, therefore loose rivets, should they occur, cannot produce leakage at this point. As one car takes the place of two, the purchaser is relieved of one-half of the switching charges and cost of repairs and track room in congested terminals and sidings is minimized. The car is built strictly in accordance with the latest safety appliance standards.

DRAMATIC LOCOMOTIVE MISHAP.

An unusual and thrilling locomotive mishap is reported to have occurred recently at Paterson, N. J., when the engineer of an Erie R. R. express attempted to bring his train to a stop at the station in that city. "When the engineer," says the report, "eased up on the throttle preparatory to stopping at the station, the engine, with its six heavily laden passenger cars, rushed on with increasing speed. He closed the throttle, but there was no response. With his engine running away with the train, there was but one chance—the emergency brakes. He jammed on the air, and the train was brought to a stop one hundred feet beyond the station. For an instant the engine's brakes gripped the wheels. Then, with a roar, the engine shook and heaved and the wheels revolved as though the locomotive was traveling 90 miles an hour. Showers of sparks flew into the air, but the train did not move. The emergency steam valves were thrown wide open, and to prevent the fire from generating steam faster than it could be blown off, several pails of water were thrown on it. Soon the engine spent its power, and the wheels slowed down. Investigation showed that the throttle had broken inside the boiler. It was fortunate that the air brakes held, for the engine would have jarred the throttle wide open and the train would never have made the sharp curves within the city limits without disaster." As a fitting acompaniment to this thrilling drama, one can fairly hear the engineer shouting: "A notch, another notch, my family pass for a middle notch in the reverse quadrant!"—*Railway and Engineering Review.*

The Western Maryland is reported to have plans under way for the expenditure of about $250,000 at Hagerstown, Md., for improvements. These will include a new roundhouse, new coal chutes, additional tracks and ash pits aside from a new passenger station.

Largest Steel Tank Car Ever Constructed.

Railway Business Association Dinner

The annual dinner of the Railway Business Association was held at the Waldorf-Astoria, New York, Nov. 22. Nearly 900 were in attendance, including officers of railways, officers of supply companies, and officers of various industrial organizations. The speakers were Governor Emmett O'Neal of Alabama; Walker D. Hines, chairman of the executive committee of the Atchison, Topeka & Santa Fe; A. C. Rulofson, president of the California Home Industrial League, and H. J. Pettengill, member of the executive committee of the Texas Commercial Secretaries' Association. President George A. Post of the association was toastmaster.

Business Meeting of the Association.

The annual business meeting of the association was held earlier in the day. The report of the executive committee briefly was as follows:

The Railway Business Association has no part in party politics. The ideal condition as we view it would be for all parties everywhere and always to declare so boldly for adequate railway earnings that the question would never be an issue between them. To that end we should exert our energy and influence and by directing our argument to all the parties alike we can, while retaining our independence, press our propaganda with the makers of platforms.

The part taken by the railway supply manufacturers (in promoting better relations between the railways and the public) has been accomplished by reasoning with their neighbors and securing their organized co-operation. That way lies future achievement. To business bodies let us appeal. We may now count on a quick and sure response from business men. They now have problems of regulation.

Through the first two years of our existence as an organization, we frequently found it desirable to make public appearances in the discussion of particular situations. During 1911, in the absence of occasions for that type of activity, we have been able to develop a kind of effort more fundamental and of greater permanent value. That work is the thorough study from time to time of some specific phase of public relations, resulting in the publication of a piece of vital, fresh information, illustrating our policy of conciliation, and disseminated in the form of a bulletin.

The committee on Plan and Scope made recommendations, which were unanimously adopted, to enlarge the scope the activities of the association by taking part in discussions on subjects other than regulation. The constitution was amended to make this possible and also to facilitate further amendments. The report of the Committee on Finance showed an increase in revenue of $5,000 over last year and a decrease in expenditures of $8,000 from last year, largely due to diminished activities in matters of legislation.

The cash balance of the association increased $9,000 during the year.

Election of Officers.

Officers were elected as follows for the ensuing year: President, George A. Post, Standard Coupler Company, New York; vice-presidents, H. H. Westinghouse, Westinghouse Air Brake Company, Pittsburgh, Pa.; W. H. Marshall, American Locomotive Company, New York; A. H. Mulliken, Pettibone, Mulliken & Company, Chicago; A. M. Kittredge, Barney & Smith Car Company, Dayton, Ohio; O. H. Cutler, American Brake Shoe & Foundry Company, Mahwah, N. J.; W. E. Clow, James B. Clow & Sons, Chicago, and George W. Simmons, Simmons Hardware Company, St. Louis, Mo.; secretary, F. W. Noxon; treasurer, C. A. Moore, Manning, Maxwell & Moore, New York; and assistant treasurer, M. S. Clayton, Manning, Maxwell & Moore.

Alphabetical List of Those Present.

A. H. Ackerman, C. B. Adams, H. H. Adams, E. L. Adreon, R. E. Adreon, William B. Albright, Thomas Aldcorn, J. S. Alexander, A. A. Allen, John H. Allen, W. F. Allen, Azel Ames, John McE. Ames, A. A. Anderson, John C. Anderson, Frank B. Archibald, Collin Armstrong, W. C. Arp, W. C. Arthurs, E. B. Ashby, J. B. Austin, Jr., William L. Austin, E. A. Averill, A. R. Ayres, H. F. Ayres. F. R. Babcock, C. W. Baker, Henry F. Baker, Thomas S. Baker, W. H. Baldwin, W. W. Balkwill, H. F. Ball, E. H. Bankard, A. F. Banks, W. P. Barba, William Barbour, C. E. Barrett, Henry Bartlett, G. M. Basford, J. Y. Bassell, R. L. Baugh, H. A. Beale, Jr., John N. Beckley, F. A. Bedford, J. H. Beek, A. T. Bell, J. M. Belleville, L. Bender, H. A. Benedict, D. P. Bennett, H. T. Bentley, L. S. Berg, W. G. Besler, Leigh Best, Jos. W. Bettendorf, Ernest Biadot, D. W. Bigoney, J. P. Bird, G. C. Bishop, Robert Black, H. W. Blake, J. R. Blakeslee, James A. Blanchard, F. L. Blendinger, Bradford Boardman, F. Boardman, George S. Boudinot, B. F. Bourne, George L. Bourne, Roland H. Boutwell, W. C. Bower, J. C. Bradley, J. E. Bradley, Daniel M. Brady, J. B. Brady, Frank Brainard, G. D. Branston, F. W. Brazier, Herbert L. Bridgman, O. P. Briggs, J. M. Brigham, J. J. Brooks, Jr., P. M. Brotherhood, Alfred L. Brown, Clyde Brown, Henry M. Brown, W. C. Brown, George F. Brownell, Matthews C. Brush, A. G. Bryan, E. G. Budd, E. G. Buckwell, H. M. Burgan, George H. Burgess, Curtiss R. Burnett, William Burnham, H. S. Burr, B. F. Bush, S. P. Bush, O. E. Butterfield. B. D. Caldwell, A. E. Calkins, R. L. Calkins, R. McL. Cameron, G. H. Campbell, L. O. Cameron, L. T. Canfield, W. H. Canniff, R. C. Caples, J. R. Cardwell, G. E. Carson, Edward Cary, Frank M. Case, C. E. Chambers, J. S. Chambers, John Claflin, F. H. Clark, J. H. Clark, W. L. Clark, L. L. Clarke, T. E. Clarke, M. S. Clayton, F. C. Cleaver, B. A. Clements, A. D. Cloud, H. B. Clow, William E. Clow, C. C. Cluff, Thomas E. Coale, F. R. Coates, William M. Coates, Ralph G. Coburn, A. D. Coffin, J. S. Coffin, Walter E. Coffin, E. R. Coleman, W. R. Collins, Morris G. Condon, Jno. J. Cones, E. K. Connelly, Fred W. Cooke, R. S. Cooper, William H. Corbin, J. S. Cornwell, Walter H. Cottingham, F. W. Cram, J. Sergeant Cram, W. S. Crandell, J. P. Crane, D. F. Crawford, Harris Creech, M. Jackson Crispin, O. C. Cromwell, S. A. Crone, Oliver Crosby, A. S. Crozier, W. J. Cunningham, Elliott Curtiss, W. C. Cushing, T. DeWitt Cuyler, Samuel M. Curwen, James C. Currie, Otis H Cutler. Thomas A. Dalton, C. F. Daly, George L. Danforth, Frederick Darlington, J. E. Davidson, R. J. Davidson, Frank H. Davis, H. W. Davies, H. W. Davis, Joseph Davis, H. P. Davison, Richmond Dean, Martin S. Decker, E. A. Deeds, H. M. Deemer, John F. Deems, William Dekrafft, C. E. Denney, A. P. Dennis, C. B. Denny, J. N. Derby, J. Desmond, Gordon Dexter, S. K. Dickerson, F. C. Dillard, F. S. Dinsmore, W. P. Dittoe, Charles E. Dix, Frank Haigh Dixon, George T. Dixon, J. A. Dixon, R. M. Dixon, William C. Dodd, Cleveland H. Dodge, C. J. Donahue, F. O. Donnell, I. S. Downing, J. S. Doyle, L. F. Doyle, F. W. Dressel, J. A. Droege, C. H. Duell, W. D. Duke, B. W. Dunn, S. O. Dunn, W. O. Duntley, Raymond DuPuy, R. N. Durborow, Philip S. Dyer. Albert B. Eastwood, Frederick H. Eaton, H. C. Ebert, R. H. Edmonds, S. O. Edmonds, F. W. Edmunds, W. M. Edwards, Joseph R. Ellicott, H. Elliot, A. G. Elvin, Theo N. Ely, N. Emmons, Jr., Newman Erb, F. B. Ernst, H. M. Estabrook, S. J. Estey, John E. Eustis, R. J. Evans. Edward H. Fallows, E. C. Farlow, Thomas Farmer, Jr., R. L. Farnham, W. H. Farraday, J. F. Farrell, S. M. Felton, R. S. Fife, W. W. Finley, Harrington Fitzgerald, F. F. Fitzpatrick, J. Rogers Flannery, B. P. Flory, S. F. Forbes, William Forsyth, Walter H. Foster, F. P. Frazler, M. Fuhrer. Edward Gagel, F. F. Gaines, R. D. Gallagher, Jr., Frank S. Gannon, Frank S. Gardner, W. A. Gardner, W. L. Garland, O. C. Gayley, A. W. Gibbs, George Gibbs, David Gibson, D. L. Gillespie, William Gisriel, Sr., William Gisriel, Jr., E. E. Gold, C. S. Goldsborough, C. A. Goodnow, R. L. Gordon, Charles A. Gould, Charles M. Gould, William S. Gould, William C. Gove, John M. Glenn, Eugene G. Grace, F. D. Graves, E. H. R. Green, Frank H. Greene, Crafton Greenough, E. W. Grieves, George H. Grone, R. S. Gross, E. M. Grove, Barton H. Grundy, R. S. Hall, H. G. Hammett, A. T. Hardin, John F. Harrigan, Irving T. Hartz, Carnell S. Hawley, W. P. Hawley, Ross F. Hayes, Scott R. Hayes, W. C. Hayes, Hugh Hazelton, Frank Hedley, B. A Hegeman, Jr., C. Heitzmann, Jr., A. S. Henry, J. S. Henry, H. C. Hequembourg, E. M. Herr, Gustav Hessert, Howard G. Hetzler, Charles M. Hewitt, H. H. Hewitt, F. N. Hibbits, S. Higgins, John M. High, Thomas Hilliard, B. S. Hinckley, Francis L. Hine, W. D. Hines, Frank Hitchcock, H. B. Hodges, George F. Hoffman, S. Hoffman, C. H. Hogan, George E. Holten, W. E. Hooper, Frank Hopewell, T. H. Hopkirk, H. J. Horn, Elmer Hornig, H. S. Hoskinson, Clarence H. Howard, John Howard, E. T. Howson, Robert Huff, H. O. Hukill, A. L. Humphrey, A. C. Humphreys, C. A. Hunter, C. W. Huntington, Charles R. Huntley, F. P. Huntley, E. E. Hughes, L. S. Hungerford, J. H. Hustis, James Imbrie, G. R. Ingersoll, H. L. Ingersoll, W. L. Jacoby, W. O. Jacquette, George T. Jarvis, E. T. Jeffery, B. T. Jellison, C. D. Jenks, P. S. Jennings, Richard D. Jennings, Alba B. Johnson, G. P. Johnson, J. Will Johnson, L. E. Johnson, S. G. Johnson, J. T. Johnston, W. F. Jones, Henry L. Joyce, Alfred J. Jupp, H. C. Kahl, Sol Kahn, E. S. S. Keith, C. D. Kellogg, Willard Kells, R. B. Kendig, John S. Kennedy, M. C. Kennedy, Harry A. Kenney, H. R. Kent, Alfred W. Kiddle, J. B. Kilburn, J. A. Kinkead, John Kirby, Jr., G. W. Kirtley, A. M. Kittredge, H. G. Kittredge, George Kittredge, A. F. Klink, Harvey Klock, C. E. Knickerbocker, Seymour H. Knox, J. Kruttschnitt, J. A. Kucera, Charles Kydd. A. B. Lacey, W. A. Lake, E. T. Lamb, D. P. Lamoreux, Frank J. Lanahan, E. L. Langworthy, C. K. Lassiter, Austin

Lathrop, W. B. Leach, C. E. Lee, Henry Lee, H. W. Leeds, Jos. Leidenger, E. B. Leigh, Lester Leland, A. W. Lewis, H. H. Lewis, C. S. Lilly, J. C. Lincoln, T. S. Lloyd, W. F. Lockwood, E. E. Loomis, W. W. Loomis, S. C. Long, J. B. Lord, L. F. Loree, Harry Lowther, G. C. Lucas, W. W. Lukens, W. H. Lyford, W. J. Lynch, S. A. Lynde. William G. McAdoo, D. R. McBain, C. C. McCain, William McCarroll, P. F. McCarthy, W. S. McChesney, Jr., S. S. McClure, D. H. McConnell, John McCord, Walter I. McCoy, Archibald M. McCrea, John R. McGinley, W. A. McGonagle, J. Gibson McIlvain, Jr., R. Townsend McKeever. E. W. McKenna, George A. McKinlock, Edward N. McKinney, R. C. McKinney, C. H. McLellan, H. W. McMaster, Stuart McNamara, Archibald G. McNaughton, James McNaughton, Logan G. McPherson, D. W. Mc. Williams, J. S. McWhorter, Norman E. Mack, H. C. Macklin, J. R. Magarvey, Robert J. Magor, Edward A. Maher, N. D. Maher, F. W. Mahl, J. J. Maliay, Milo R. Maltbie, H. C. Manchester, E. S. Manee, J. H. Manning, Dwight S. Marfield, William Marshall, W. H. Marshall, A. W. Martin, W. B. Martin, R. L. Mason, Stephen C. Mason, W. R. Maurer, S. C. Mead, E. S. Meade, J. G. Mecheam, J. E. Meek, E. D. Meier, F. O. Melcher, L. B. Melville, H. P. Meredith, A. Messiter, P. W. Miller, R. S. Miller, Walter E. Miller, William S. Miller, I. H. Milliken, C. R. Mills, George G. Milne, Edward G. Miner, W. H. Miner, A. E. Mitchell, George E. Molleson, A. C. Moore, E. S. Moore, George D. Morgan, P. H. Morrissey, Burton W. Mudge, H. U. Mudge, A. H. Mulliken, William J. Mulholland, Frank A. Munsey, R. H. Munson, J. P. Murphy, P. F. Murphy, Paul J. Myler. L. F. Nagle, Harrison Nesbit, J. V. Neubert, A. Parker Nevin, Joseph E. Newburger, A. S. Nicholls, Benjamin Nields, Jr., W. T. Noonan. A. F. Old, George T. Oliver, Emmet O'Neal, Rudolph Ortmann, Charles W. Osborne, L. A. Osborne, E. H. Outerbridge, George B. Owen. Martin S. Paine, F. E. Paradis, John Pardee, La Grand Parish, R. H. Parks, W. L. Park, Frederic Parker, D. M. Parry, R. S. Parsons, J. H. Patterson, W. W. Peabody, W. G. Pearce, G. H. Pearsall, J. A. Pearson, G. L. Peck, H. G. Peck, C. R. Peddle, E. Pennington, Philip Peter, Ralph Peters, H. J. Pettingill, S. D. Pettit, J. M. Pickands, T. M. Pierce, Ira A. Place, J. G. Platt, F. A. Plummer, E. L. Pollock, D. E. Pomeroy, L. R. Pomeroy, A. J Poole, James W. Porch, George A. Post, G. L. Potter, Sereno S. Pratt, W. P. Pressinger, Edward F. Pride, Henry S. Priest, C. S. Prosser, H. G. Prout, F. A. Purdy, D. W. Pye. Robert Radford, George D. Rand, J. S. Ralston, J. C. Ramage, J. W. Rawle, George J. Ray, John Reed, J. H. Regan, W. L. Reid, Franklin Remington, J. O. Reynolds, J. N. Reynolds, W. C. Reynolds, William Barrett Ridgely, E. P. Ripley, W. E. Robertson, F. C. Robbins, George J. Roberts, Frank H. Robinson, J. R. Robinson, J. K. Robinson, L. D. Rockwell, Thomas Rodman, W. M. Rogovine, C. E. Rood, Mark A. Ross, Oren Root, David W. Ross, Elmer E. Ross, W. L. Ross, Daniel Royce, A. C. Rulofson, Thos. Rumney, F. A. Ryer. Charles H. Sabin, R. V. Sage, J. E. Sague, W. W.

Salmon, A. L. Salt, J. H. Sandford, William C. Sargent, Winthrop Sargent, Jr., J. D. Sawyer, C. E. Schaff, Pierce D. Schenck, Jacob H. Schiff, William Schlafge, Walter F. Schleiter, J. M. Schoonmaker, C. M. Schwab, J. H. Schwacke, Frank A. Scott, Isaac N. Seligman, E. V. Sedgwick, Coleman Sellers, Jr., R. C. Shaal, John Shannahan, R. T. Shea, C. M. Sheaffer, Charles H. Sherburne, Charles W. Sherburne, H. Sheridan, C. W. Sherman, L. B. Sherman, T. P. Shonts, Charles Shults, F. K. Shults, E. A. Simmons, Angus Sinclair, Ellsworth Sisson, George T. Slade, Ralph E. Slavin, John A. Sleicher, C. C. Smith, F. A. Smith, George T. Smith, J. Allan Smith, Montgomery Smith, R. D. Smith, R. E. Smith, S. L. Smith, Willard A. Smith, Fred W. Snow, W. W. Snow, J. B. Snyder, F. M. Souther, A. C. Soper, J. P. Soper, G. W. Spear, W. H. Speer, John C. Spooner, Frank J. Sprague, J. White Sprong, William St. John, B. E. D. Stafford, W. L. Stanley, Charles A. Starbuck, George Stanton, E. H. Stearns, L. F. Stearns, C. H. Stein, A. A. Stevenson, A. J. Stevens, Frank W. Stevens, G. W. Stevens, Alex. Stewart, Arthur E. Stilwell, Townsend Stites, Henry L. Stoddard, A. J. Stone, A. P. Storrs, Charles P. Storrs, L. S. Storrs, E. T. Stotesbury, A. B. Strange, A. C. Stratford, Isidor Straus, A. P. Strong, J. B. Strong, F. L. Stuart, George S. Stuart, J. C. Stuart, Valentine H. Surghnor, E. M. Sutcliffe, Gerald Swope, F. E. Symons. E. L. Taylor, H. D. Taylor, W. P. Taylor, H. B. Thayer, J. B. Thayer, R. E. Thayer, A. P. Thom, E. B. Thomas, George Thomas, 3rd., I. B. Thomas, A. W. Thompson, Lynn W. Thompson, W. A. Thomas, W. O. Thompson, W. V. S. Thorne, John L. Thurston, E. B. H. Tower, Henry R. Towne, J. W. Treat, R. Trimble, W. A. Trubee, J. L. Truden, William H Truesdale, A. G. Trumbull, Frank Trumbull, W. S. Twining, F. E. Tyng, William J. Tully, Alexander Turner. W. P. Underhill, Fred W. Upham, Carl M. Vail, E. W. Van Houten, Samuel M. Vauclain, R. C. Vilas, August Von Glahn, V. von Schlegell, Harry D. Vought. E. H. Walker, Roberts Walker, J. F. Wallace, Charles J. Walsh, James Walsh, P. T. Walsh, T. J. Walsh, W. J. Walsh, E. G. Ward, John E. Ward, J. H. Ward, Brainard H. Warner, G. P. Warner, Worcester R. Warner, Wm. D. H. Washington, T. J. Watson, R. Wayland-Smith, R. H. Weatherly, R. K. Weber, George S. Webster, W. F. Weller, Rolla Wells, George Westinghouse, H. H. Westinghouse, A. R. Whaley, Harry A. Wheeler, W. H. White, C. N. Whitehead, E. C. Whitmyer, Travis H. Whitney, H. B. Whittlesby, Albert H. Wiggin C. H. Wiggin S. B. Wight, S. B. Wight, G. W. Wildin, F. H. Wilkins, Daniel Willard, R. D. Willard, W. R. Willcox, W. W. Willett, H. (Capt.) Williams, Thomas Williams, Ward W. Willits, E. B. Wison, Hugh M. Wilson, L. F. Wilson, Edwin W. Winter W. C. Winter, Robert F. Wolfe, Guilford S. Wood, L. G. Woods, W. C. Wood, W. D. Wood, W. H. Woodin, G. H. Woodroffe, C. M. Woolley, Samuel Woolverton, C. N. Woodward, Edward S. Worth, George Worth, William Penn Worth, H. C. Wright, R. V. Wright, Farham Yardley, C. D. Young.

OXY-ACETYLENE WELDING.*

By H. T. Bentley—A. S. M. P.—C. & N. W. Ry.

On the Chicago & Northwestern we began in a humble way about 18 months ago to use the oxy-aceylene process and thought inside of a week or two we would be welding up flue sheets, putting patches in fire-boxes, repairing castings and a hundred other things our friends had told us could be done so easily, but apparently nothing went right, a crack would be welded in one place only to open up again or start another in a different location. We had some comfort in the fact that even the so called experts fell down, one case in particular being fresh in my mind: A casting was broken which we desired to have repaired at once and, having oxygen and acetylene on the ground, thought it would be a good opportunity to let some of the people, (who were so anxious to show us how it could be done), have a chance at it, which we did, and with miserable results, the operator claiming the iron was so poor that he could not get anything suitable to work on. After this, some of our men felt very discouraged at the results obtained and you could hear them saying "I told you so" but others were nearly as optimistic as I was, although after over four months' trials and tribulations, if a vote had been taken at that time, it would have been overwhelming in favor of dropping the whole thing. Finally, however, we were able to weld up some unimportant castings which gave us fresh courage. As we were having considerable trouble with cracked flue sheet bridges on certain engines, we thought it would be a good thing if we could weld them up and, before trying it on a flue sheet in place, we got an old one and experimented for days with it, sometimes having more cracks at night than we started with in the morning; at last we appeared to have solved the difficulty and started on a flue sheet in an engine and all we had learned on the flue sheet that could expand and contract without having anything to prevent it, had to be learned over again when the sheet was held rigidly in place without an opportunity to move in any direction. We were, after considerable experimenting, at last able to handle this kind of work in a satisfactory manner, and all having experience with boiler work will appreciate what it means to be able to do a job of this kind on a flue sheet that is otherwise in good condition.

One morning we were confronted with a rush job which, if successful, would mean a good deal to us. A superheater locomotive was in the shops with a cast iron steam pipe cracked for a distance of 14 in. Unfortunately, as it appeared at the time, we did not have a new steam pipe nor a pattern to make one, and the engine was badly needed, as engines generally are, especially when it looks as if you cannot get them. Fortunately, we had the oxy-acetylene apparatus and after a council of war, it was decided to try and weld up the steam pipe, although most of our men thought it could not be done satisfactorily. The attempt, however, was made, and much to our surprise a first-class job was the result, which tested out O. K. This gave us confidence and other jobs were undertaken, some of which turned out well and others were failures. At about this time we got hold of an operator who used his head while doing his work, and after that it was comparatively easy; nothing was too complicated to tackle and we are able to successfully weld up in fire-boxes, apply patches, weld in half side sheets, repair broken cylinders, weld up broken driving wheel spokes, build up worn parts on castings, air reservoirs, etc., repair broken castings of all kinds; so that now we cannot keep house without it. A saving of from $1,200 to $1,500 can easily be effected per month in a shop like ours by repairing things that otherwise would have found their way into the scrap; this amount simply covers the actual saving and does not in any way take into consideration the value of the time an engine or machine may be out of service.

*From a paper read before the Western Railway Club.

The University of Illinois published a Bulletin No. 45 in September, 1910, on "The Strength of Oxy-Acetylene Welds in Steel" by H. L. Whittemore which should be read by all who think of taking up the subject, as it contains valuable data and would, if studied, save lots of wasted time and material.

In May, 1911, this subject was fully discussed after the reading of a paper on "Acetylene Welding" by J. M. Morehead before the New York Railroad Club and a list of the possible uses was given, which should be studied by any person thinking of going into the business, and for the information of members who have not had an opportunity of reading Mr. Morehead's excellent paper, I am taking the liberty of quoting from it some of the things that can be done:

Reclaiming light and heavy castings from the sand with blow holes, sand holes, cold sheets, etc.

Reclaiming light or heavy cracked or broken castings whether of cast iron, cast steel, brass, bronze or aluminum.

Adding metal to parts that have been worn by friction, etc., making such parts serviceable as originally.

Repairing large or small boilers in place, welding in new par s or filling in cracks edge to edge.

Split piping of all kinds can be quickly welded when in place, usually without breaking connections.

Welding flanges on pipes.

Rivet heads quickly cut off and shanks driven out.

Tool steel can be added to common steel.

Bridges, boilers, arches, steamships, etc., can be wrecked by the cutting process.

Bolt and other holes worn beyond use can be restored to former size, etc.

Holes drilled in error can be filled in, dressed down and rendered undiscernable.

Teeth broken from gear wheels can be renewed.

In reading the discussion of the paper at New York, I was interested in noting what several motive power men had to say about their experience which had at that time been very limited, and it coincided so closely with what ours used to be that I could almost imagine it was our men talking as they did about ten months ago. I had confidence in the possibilities of the thing, but could not, for a time, get up much enthusiasm. All this had changed, however, and now if we are in a hole with some repair job, the first thing that is suggested is "try Oxy-Acetylene," and it seldom fails us. We do not recommend it for frame welding, as Thermit and oil does that more to our satisfaction than anything else.

SAFETY BUREAU, C. G. W. R. R.

The Chicago Great Western has taken initial steps toward the organization of a Safety Bureau, and the following named managing or central committee has been appointed: Messrs. Hiram J. Slifer, general manager; J. G. Neuffer, superintendent of motive power; L. C. Fritch, chief engineer; G. O. Perkins, superintendent of telegraph; Dr. G. N. Wassom, company surgeon, and J. H. Ambruster, chairman of educational committee.

A comprehensive plan is being developed, which will provide for a systematic watchfulness in all departments of the company's service, looking to the prevention of accidental personal injuries to employes and patrons of the road.

The A. T. & S. F. is preparing to construct yards, terminals and shops at East Hutchinson, Kan., requiring a tract of land over 1 mile in length and from 1,000 to 1,500 ft. in width. The improvement will include the construction of 28 separate tracks. The A. T. & S. F. has also given a contract to Oscar Ford, Corona, for the construction of a branch line from Corona, Cal., to a point in Temescal Canyon. It is stated that the Baltimore & Ohio shops at Garrett, Ind., are to be rebuilt. The work will be undertaken next summer.

THE LAST GASP OF A GONDOLA.

By J. T. Bougher.

"I could never understand," said a Gondola to an Oil Tank, as they lay tossed to one side after a main line mix-up, "as to why these people who try to write up the family history of us wandering critters invariably select our tight chested relations, commonly styled Box Cars, as the subject of their literary strain. For a quarter of a century I have heard occasional squeaks of the pen describing various stunts of the Box Car, but nary a squeak have I heard of the merits of other members of our great family of commercial travelers.

"In fact, what are they but two barn doors, a pair of stepladders and a roof garden tacked on to our original bodies," with a tall stepping-off place at each gable end? Yet the mysterious thread of antiquated romance continues to bind into literary clusters the Box Car in its wanderings, just because it affords a shelter to the knights of the rail and can ever boast of the wide variety of mysterious packages within its sealed up portals. Even in the harping of the printer's devil in the tales of many railways have I never heard a sound other than the echo of the Box Car boost."

"I have squandered a little time on that myself," said the battered up receiver of Standard Oil, "but, as for me, my fate is sealed in the character of my architectural makeup. I carry within me sufficient oil to loosen the silvery tongue of legions of Demosthenes, yet my inner habitation is as dark as Jacob's sepulchre, and my capacity for refined influence is frequently destroyed by a crude deluge of a Standard character, injected through my only skylight. But as for you," continued the Oil Tank, "you still have an opportunity before reaching the valley of the scrap heap shadow to arise, Hamlet-like, and hand down to posterity the greatest heritage of the age, a record of your useful life and sacrificial destruction."

"I accept the philosophy of your argument," said the Gondola, "and in this, my last will and testament, bequeath to my kin of the same class this claim for their perpetual recognition as the leading vehicle of the world's commerce:

"First of all, I shall cast no stones at my distinguished relatives, who are perhaps well shapen in their respective spheres, but will bring to view such virtues embodied in my construction as shall place us in the rank to which we, by right of inheritance, belong, and, to do this in the limited time my closing moments may permit me to speak, I need but refer to my creation, some early observations and my last journey from my native sphere.

"My first recollection of material existence came to me as I felt a chilly stencil placed against my left side by a short fellow with a set of January whiskers, who quickly lathered thereon the number 3741, which I afterward learned was a part of the name under which I was to work my way in the world. Prior to this I underwent a sort of embryonic sensitiveness, which I now recognize was the real making of me, but not until a blast of wind, like unto that of an Oklahoma cyclone, had swept the kinks out of my air hose did I begin to 'come to.'

"About the same time I began to move and was soon going down what they called a 10 per cent grade, which put a silvery shine on my brakeshoes and taught me a thing or two about how to play shortstop. From then on I learned rapidly and began to fully realize that I was fearfully and wonderfully made, and, being of an open-hearted nature in construction, I was not only able to see all that was going on but was also accessible, myself, to all comers, and in this way soon learned the full pedigree of everything on wheels from a hack to a battleship, and a sympathetic feeling for my less fortunate kin penetrated my entire body and on down into my running gear.

"But to keep to the defense of my makeup, I and others of the same 'high' and 'low' class seemed to be equal to anything, and, as for being accommodating, I have seen two or three of us get together and carry a chunk of bridge iron that would reach from Cook's Cave to Peary's Point and still extend six feet beyond the brake staff. As for capacity, nothing ever passed us, although compared with some other members of the family we are as easy to keep as a West Virginia mule, while a Box Car needs attention at every full moon and sometimes on the quarter. We range from forty to a hundred thousand pounds, and our guardians claim we are good for 10 per cent beyond our stencil marks.

"And here let me get in a word about our side pockets. I was indeed as proud as a boy in his first breeches on discovering two or three chestnut holders on each side of my body. In later years, however, I learned that some of our greatest joys bring us greatest troubles, for, as proud as I was of those side pockets and what they enabled me to do, I found they got me into all sorts of trouble when the loading man failed to do right. I recall an occasion when they could not use a Box Car, as usual, and two of us Gondolas received a load of tall telegraph poles. The M. C. B. protection was all right, but somebody blundered and used a bunch of violin strings to bind my standards together instead of the regulation hank of eighth-inch wire. When under way my pockets bulged like a bag of circus peanuts, and I neatly chiseled a two-inch channel in the limited. I did something more. I polished up the roof of the first tunnel I reached and brought to light three rusty tombstones, which some university professor with a microscope said surely belong to the prehistoric age. The subject of clearance I thus learned was of a scope and character that would fill five of Mr. Carnegie's libraries, yet a certain publication company has sucessfully boiled it down to pocket size at thirty cents per copy, guaranteed to show the clearance between every fence post and the upper outer edge of anything on wheels between Mr. Flagler's "bunch of keys" and the Yukon Valley. Shortly afterward I was taught the first principle in chemistry, which I understand is force; for, on being shunted by a green engineer, I made one of those patent irresistible bumpers resemble Rip Van Winkle's wood pile before he closed his eyes and slept. I, of course, shook from the shock but came out sound in all my members and made a note in one of my journals that those who viewed the result said that my escape was due to the style of truss which I wore.

"But to resume my claim, I solemnly declare that we are the only original class having the convenience of a drop bottom, although in my own immediate family are several thousand coal cars which can drop their load in the same way, so that everybody knows the advantage of a drop bottom, and when you couple up this convenience with that of a drop end and this convenience with that of a drop end and portable sides, are not the Box Car and all others outside of our class beaten to a frazzle?

"I should perhaps here remark that my native soil was in the East, near a point where the tide ebbed and flowed twice in twenty-four hours, but the trend of traffic was floating toward the West, and I was supposed to earn just as much away from home, empty or loaded, as when on my own road. This away-from-home business, they say, is a sticker, and that the 'A. R. A.' is collecting all kinds of data on the subject, and that some day there may not be any empty hauls, even by a shad net.

"But, to shorten my story right where I should like to make it the long meter: I was picked out one day for a load to a far western city, passed inspection O. K. and, under

the usual regulations, left home on April 29, 1907, via a southerly route, which seemed specially adapted to me, since I was built to better travel in the beauty and glory of the day. Having reached my destination and my burden having been discharged in good faith, I found myself being kicked about, until one day I was passing through the southernly gateway of St. Louis, where I was met by one whom I had often heard of through others of my kin as being a genial go-between for getting acquainted with the various routes in that locality. There was no demand made upon me by him, however, as I was under a load which seemed to give me right of way through his domain, and which, as I understand it, was somewhat contrary to history. After receiving various kicks and cuffs, I finally reached a road I shall call A, where they seemed inclined to give me my axle grease and mending for my keep. At least the record of my owners, which the Interstate Commerce Commission say shall be kept for a long time, showed that I was not being treated square, and they labored hard to secure my release and return, but without avail, until they were finally informed by the outfit which had been holding me that I had met with an accident. Pressure for further details brought out the admission on the part of my captors that the calamity occurred on road B two months previous. The latter, in switching me to a nearby industry for a load, allowed a draft of us to stand on the main track of road C, under some kind of a switching privilege, wherein it developed that the exact landmarks were unknown. An engine of road C came along and there occurred a mixup which severed me in twain. One part lay to the north and the other to the south, but finally my debris was gathered up and left on this hillock, where I now rest.

"My owners decided to at least keep up the search for my body, and in doing so there developed a marvelous four-cornered piece of correspondence lasting over one year, which would seem of itself to establish my worthiness for perpetual mention. In the meantime some fellow came along with brush and paint pot three months after I lay there in the condition named and effaced my original number, giving me a new one, 4082, a deed I never could understand, in view of my condemned condition.

"I am told that C would not stand for my destruction because I occupied space where I did not belong. B would not pony up for my loss, as I was merely being handled as an accommodation for A, and A positively refused to assume responsibility by reason of my blood having been spilled on foreign soil. It seemed that my case had no precedent in the statutes of American railway regulations.

"After an extended controversy, lasting well nigh onto two years, and the documents covering my case had assumed the proportions of Dickens' complete works, my owners were finally compensated for my loss, or at least that seemed to be the expression of those who took the final view of my remains.

"In the meantime choice chunks of timber now and then disappeared from my splintered sides, which I believe went toward the roasting of many a 'coon. But, be that as it may, I felt there was hope for decent disposition as long as old iron was one-half cent a pound and rubber still high, for my brake staff and running gear are still intact, and a section of my air hose lies concealed beneath my left bolster.

"And, sure enough, as the last spark of breath comes gurgling through my twisted air pipe, I hear the sound of the wreck train in the distance, and from a nearby darky's cabin the sunset zephyrs waft an old-time melody, to the tune of which I'll dedicate my dying thoughts:

"I looked over Jordan, and what did I see,
A-comin' for to carry me home?"
An engine with a wreck train, comin' after me,
A-comin' for to carry me home."

—Santa Fe Employes' Magazine.

RELATIVE ADVANTAGES OF GROUP AND INDIVIDUAL MOTOR DRIVE.*

By C. W. Drake.

Motor drive is not as some people are inclined to believe, a panacea for all industrial ailments, although there are but few plants in which motor drive properly applied will not improve conditions. Hence it may ordinarily be assumed that motors are to be installed, and the questions to be settled are: What type of drive to use, and whether to generate the power or to purchase it from a central station. It is not the purpose of this article to attempt to show how to lay out an electrical equipment for any special industry, but rather to call attention to some of the more important factors bearing on the type of drive to be used, and the power supply.

Motor drives are installed because they produce a greater profit in the industry, and not because they are the ruling fad. Increased profit may result from increased quantity, improved quality, reduced power consumption or a combination of these conditions. Consequently, before any action towards the installation of motors is taken, figures should be available showing what may be expected in the line of first cost, power consumption, maintenance, and improved manufacturing conditions from several systems of drives.

There are two general systems of drive; namely group and individual, and the choice between these two for various applications is often a question of dispute. The power cost in most industries is less than 5 per cent of the total manufacturing costs, so that a slight increase in production will quickly offset a large saving in power and consequently the item of prime importance in laying out motor drives is production, and after all items bearing on it are taken care of, the question of power cost and type of drive may be considered. Each installation is a separate problem in which there are many factors and the degree in which one or more of these various factors predominate determines the type of drive to be used.

*From a paper read before the Engineer's Society of Western Pennsylvania.

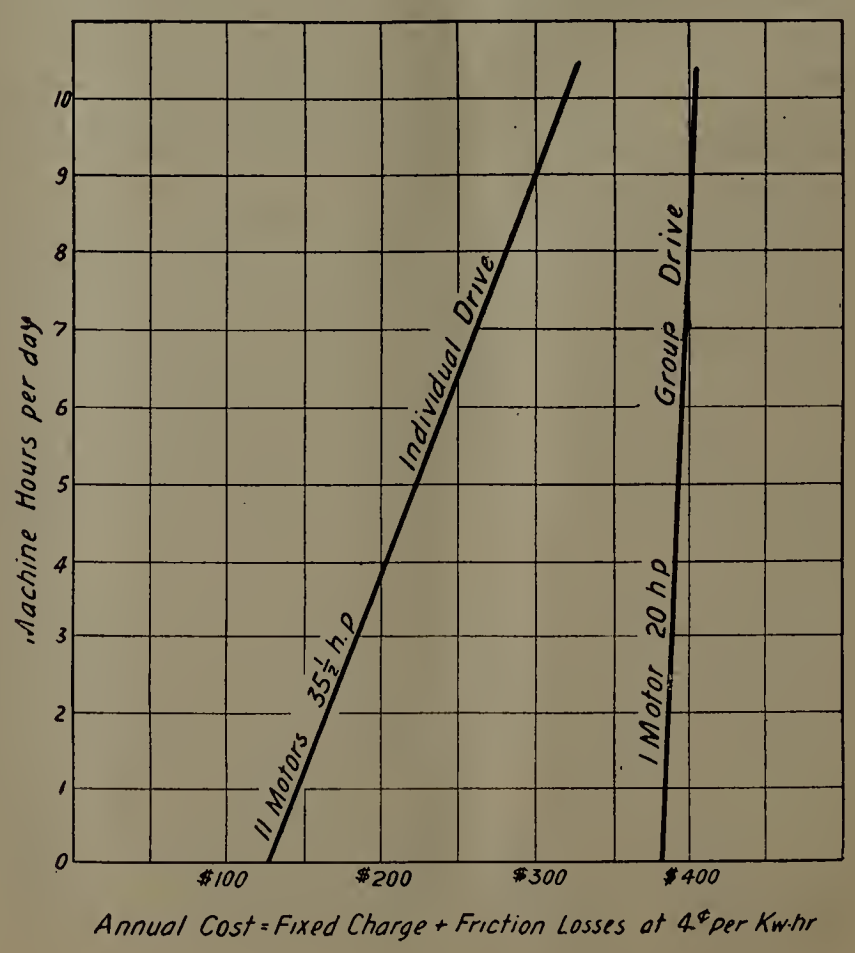

Fig. 1—Relative Annual Cost, Group and Individual Drive.

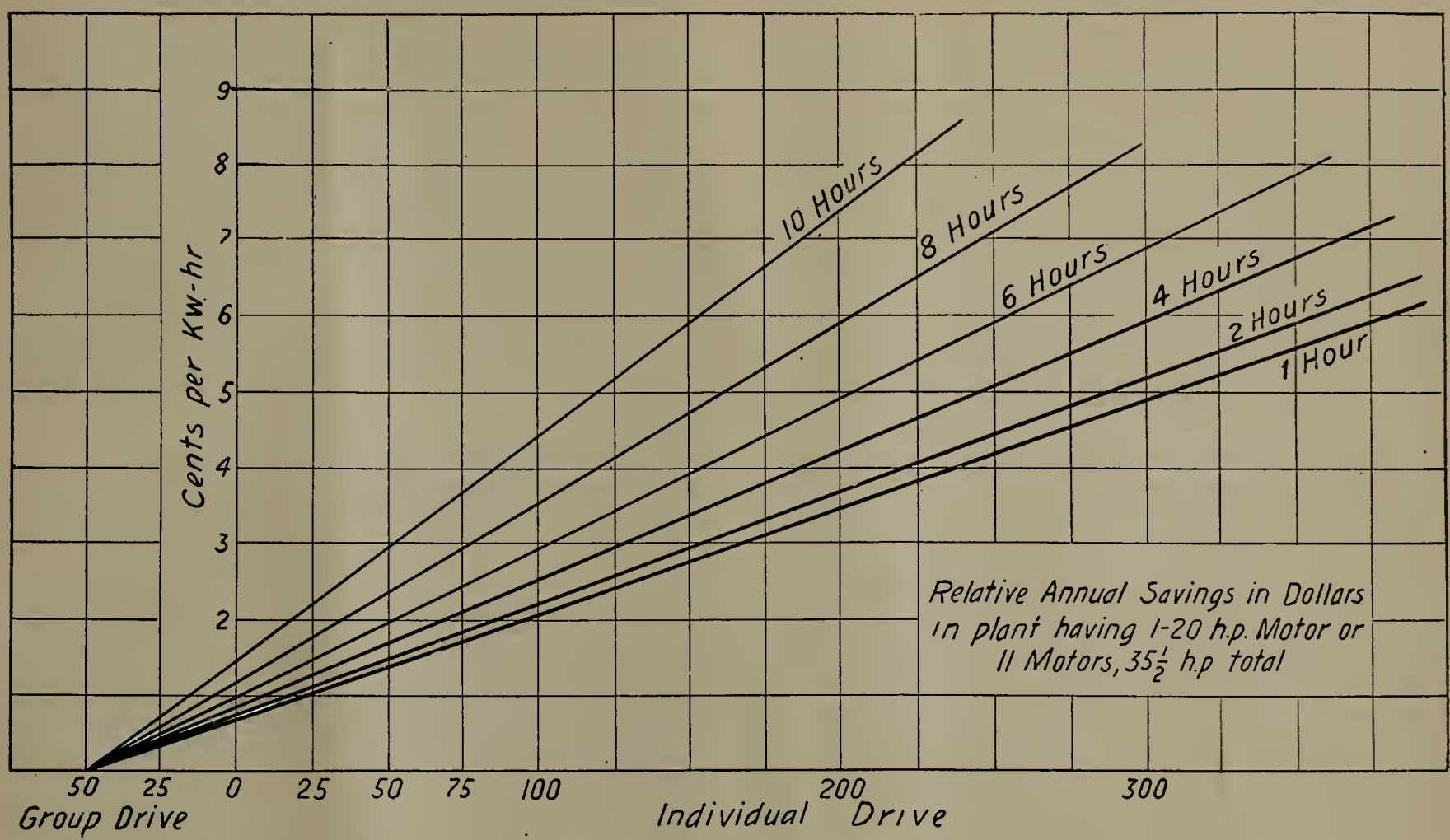

Fig. 2—Relative Annual Savings.

Outside of factors bearing directly on production, other points to consider when comparing group and individual drive are:

1. Investment.
2. Rate for power.
3. Machine load and time factor.
4. Shafting friction.
5. Maintenance.

Investment is one of the principal factors that prevent the installation of individual drives, since this figure can be quite accurately determined while the saving in energy is more or less approximate and problematical.

With individual motor drive the total horse power rating of the motors installed in a plant will be considerably greater than with group drive, but the maximum power demand of the plant is approximately the same in either case. Some power contracts with central stations are based on the horse power connected, or on the maximum demand considered as a certain percentage of the connected load. It is easily seen that a rate basis as above would tend to prevent the installation of individual drives since a group drive would obtain a lower basic rate, although the high efficiency of the individual drive would tend to reduce the actual power consumed. A more logical basis of charging for power would be on the actual maximum power demand which is either estimated or obtained by test, together with the actual energy consumed. On this basis the individual drive by reason of its lower transmission losses will show a lower power cost than the group drive.

In group drive there are two distinct loads, the variable load of the machines and the friction of the shafting and belting. The lower the machine load factor, the greater becomes the percentage of the friction load and the more inefficient the transmission.

In order to show more clearly the relative advantages of individual and group drives, an example has been made of an existing planing mill. At present a 20 h. p. 840 r.p.m. squirrel cage induction motor is installed driving eleven machines by means of a 60 ft. shaft (eight hangers) and six 2-hanger countershafts. The cost of the 20 h. p. motor for group drive is assumed as $297, and cost of the shafting and hangers, in place, as $210.

If, on the other hand, the eleven machines were operated by individual motors, the following table shows the size and speed that would be recommended for each machine.

Machine	Motor H. P.	Motor R. P. M.
30-in. single surfacer	7½	1120
8-in. four side moulder	7½	1120
16-in. hand feed rip saw	5	1700
20-in. swing cut off saw	3	1700
Single spindle shaper	3	1700
18-in. jointer	3	1700
Tenoner	3	1700
Mortiser	2	1700
Jig saw	½	1700
Drill	½	1700
Double emery wheel	½	1700

The cost of the eleven motors for individual drive is approximately $848.10. The fixed charge has been figured as 15 per cent, which for this class of service should cover depreciation, interest, taxes and insurance.

It is assumed that with individual drive when the machines are not running the motors are shut down, while with group drive the belts are on loose pulleys. The proper motor losses have been added in each case. The friction loss in each bearing is figured as 100 watts and an idler pulley is considered as a bearing. The actual load on the machines has been assumed the same with both drives and consequently is neglected. Figure 1 is based on the above assumptions and shows that for the plant in question the fixed and operating charges are lower for the individual drive, regardless of the machine hours per day, although for long hours of service the difference between the two drives becomes less. Practically all of the advantages from a production standpoint are with the individual drive so that there is very little excuse for using group drive in this case.

Figure 2 is an extension of Fig. 1, and has been made to

show the effect of the power rate on the relative advantages of the two systems of drive for various hours use of machines per day. From this curve it is seen that if all the machines worked six hours per day, or had a time factor of 60 per cent, that for all rates of one cent and above the advantage is in favor of the individual drive. For long hour service and very low rates the group drive has a lower total cost.

Both of these curves show that there is no sound reason for using group drive throughout in planing mills, and the example taken is entirely characteristic of this class of plants. Of the five factors mentioned in the early part of this article, all but the last one, maintenace, are graphically represented in Figs. 1 and 2. The plant with group drive has a total of 72 ft. of shafting, 20 hangers, 11 idlers and 18 belts, while with individual drive there would be at the most 11 belts and no overhead hangers or belts. To any one familiar with shop maintenance it is not difficult to see on which side of the book the balance for maintenance will be.

Although a concrete example was taken in order to obtain definite figures for the curves the same reasoning might be applied to plants of any size or in any industry. In large plants both individual and group drives are often used, the choice depending on the nature of the work done in the machines, the number of hours use per day and other factors as previously mentioned. It should be always borne in mind that the question of production predominates but that the actual power saving in individual drive by eliminating shafting and belts is sufficient to pay much more than the fixed charges on the increased investment.

NOTES ON STEEL TIRES FOR HIGH SPEED LOCOMOTIVES.*

By Dr. P. H. Dudley.

The development and running of the heavy loads of five to ten tons per wheel for high speed trains have indicated the fact that it is difficult for the manufacturer to produce sufficient mechanical work upon the metal of a thirty-three or thirty-six inch tender, coach or truck tire to give the steel of every tire of the ingot uniform physical properties for the entire circumference of the treads. This was possible for the lesser strains of the lighter wheel loads and slower trains of a decade ago. Higher and more uniform physical properties per ingot are required for the entire metal of the circumference of each tire per melt for heavy wheel loads and high speeds.

Figure 1 represents an eccentric steel tire which developed on a tender wheel originally of thirty-six inches in diameter but by being turned one or more times had reduced to thirty-two and one-half inches. Two-thirds of the circumference of the tire withstood the results of service, only those portions of the metal of lower physical properties being deformed, but this was sufficient to make an eccentric tire which not only shelled but caused severe impacts upon the rails under the rapidly moving trains. This is nearly typical of the eccentric tires which develop in the central thickness of the original metal after they have been turned one or more times. The texture of the steel is usually coarse and fragile, incident to the soaking in the furnaces at high temperatures to which it was subjected in fabrication.

Eccentric and shelled tires develop with greater rapidity in the winter than summer due in part to two distinct effects of the falling temperatures upon the metal of the tire.

The first effect is due to the contraction of the metal of the tire augmenting the shrinkage strains upon its wheel center.

*Bulletin of the International Railway Congress.

The second effect is due to the unequal contraction between the components of the mineral aggregates of the metal increasing its fragility in service as the temperature falls.

The metal in some tires has entrained impurities which become the starting point of the failure in the different portions of the tread. In other types of eccentric tires the deformation is local and confined to a few inches of the tread. These are known to have developed in some cases in one or two trips.

Figure 2 represents a tire from the mate wheel on the axle which has performed the same service and the metal in the entire circumference proved of adequate physical properties to sustain the wheel loads without irregular deformation.

Tonnage Upon Rails and Wheels.

Rails.—The tonnage supported by a given portion of the bearing surface of a rail due to a passing wheel contact is the static load of construction plus its generated wheel effects; therefore, the total tonnage is the product of only the number of passing static loads of construction and their generated wheel effects.

Wheels.—The tonnage sustained by the metal of the treads of the wheels is the static load of construction plus the generated wheel effects multiplied by the number of revolutions; therefore, the tonnage accumulates more rapidly than upon rails.

The total tonnage of the equipment is divided between two rails; therefore, the amount they will sustain before renewal accumulates many times slower than on wheels.

The tire receives and sustains its load each revolution upon every portion of its circumference. The thirty-six inch tender, coach and Pullman car wheels make five hundred and sixty and two-tenths revolutions per mile. The maximum load upon the tender wheels by construction is ten and two-tenth tons but the average load is about nine tons, or five thousand, forty-one and eight-tenths tons per mile, and for a run of one hundred and fifty miles in three hours and fifteen minutes would be a static load for each tender wheel of seven hundred and fifty-six thousand, two hundred and seventy tons. The generated wheel effects would add from twenty to fifty per cent additional at high speeds, depending upon how smooth or even the treads maintained their circumference. A tender tire which became eccentric ran twenty-nine thousand miles before it was removed and its total tonnage approximated one hundred and forty-six million tons for about six months' service.

The tonnage on Pullman car wheels of five tons per wheel is equivalent to a static load of two thousand, eight hundred and one tons per mile, and the tonnage per trips would be as follows:

Boston to Chicago 1,023 miles × 2,801 tons = 2,865,423 tons.

New York to Chicago: 964 miles × 2,801 tons = 2,700,164 tons.

New York to St. Louis: 1,158 miles × 2,801 tons = 3,243,558 tons.

New York to Cincinnati: 885 miles × 2,801 tons = 2,478,885 tons.

The generated wheel effects will add from twenty to forty per cent additional tonnage according to the smoothness of the tread and track.

While the total tonnage on the Pullman car wheels for a trip is much greater than that experienced upon the tender wheels of the locomotives, yet the intensity of the unit stresses upon the tender wheels is from two to three times as great for each individual repetition as occurs upon the Pullman car wheels. It is for this reason that they are able to withstand so many more repetitions of these lighter

loads before the treads shell or become visibly affected. The unit intensity of the stresses not being as much as on the tender wheels the wear and deformation of the tire is not as rapid, though some shelled and broke the past winter in America.

The locomotive drivers of large diameter though carrying a heavier wheel load do not accumulate tonnage upon the tread of the tires as rapidly as the tender wheels. The seventy-nine inch drivers make two-hundred and fifty-five and three-tenths revolutions per mile, and with a static load of fourteen and thirty-four hundredths tons, or three thousand, six hundred and sixty-one tons per mile for a trip of one hundred and fifty miles the total tonnage would be five hundred and forty-nine thousand, one hundred and fifty tons. The same drivers for one hundred thousand miles before shopping the total tonnage would be three hundred and sixty-six million, one hundred thousand tons, while the generated wheel effects would add from thirty to sixty per cent.

Generated Wheel Effects.

The opinion of previous reporters, and some of those present, is that the generated wheel effect might increase the total load upon the wheels fifty per cent. This would depend to some extent on the condition of the wheel tread. It is a well-known fact that the generated wheel effects upon the stiffer rails in present use are much less than those upon the stiffer lighter sections. The experience of running engines at sixty and seventy miles per hour shows that with the wheel treads in good condition the wheel effects do not rise to fifty per cent of the total load after acceleration and the uniform motion of the train has been attained. The application of the brakes for deceleration also increases the percentage of wheel effects. When the tread of the wheel becomes eccentric then the wheel effects may exceed fifty per cent of the load and in many cases more than double the total loads upon the wheel in its impact upon the rails.

The reporters upon special steels and tires state that in every country difficulties are experienced in securing metal which renders satisfactory service in tires. The ordinary carbon steels must be well deoxidized and purified for the metal to be of sufficeint physical properties to carry the heavy wheel loads of eight and ten tons per wheel for tires of thirty-three and thirty-six inches in diameter. The work upon the metal in fabrication is much less for the smaller diameter than occurs for the tires for the driving wheels. The service rendered by driving wheel tires on the Pacific type of locomotives, class K-2E, New York Central & Hudson River R. R., of which the average static wheel load is twenty-eight thousand six hundred pounds, is from one hundred thousand to one hundred and twenty-five thousand miles before they require shopping for re-turning. The thirty-six inch tire under the tender has a maximum static load of twenty-thousand three hundred and seventy-five pounds when loaded and few of these tires run more than thirty thousand miles before they require shopping for re-turning. The wheel effects under the tender tires are greater in proportion to their load and speed owing to the greater intensity of the wheel pressures and more rapid increase of the irregularity of the tread than under the locomotive drivers. More attention will be paid in the future to these differences of service and metal selected to meet the increased conditions of wear and deformation to make the tender tires do a greater service before they require re-turning. Tests are now being made of oil hardened and annealed tires for this service, also metal of higher grade of purity and more uniform physical properties in the entire circumference of the tread. Problems are now better understood than heretofore and there is but little question but that decided improvements will be made which will conduce to the betterment of the tires for service.

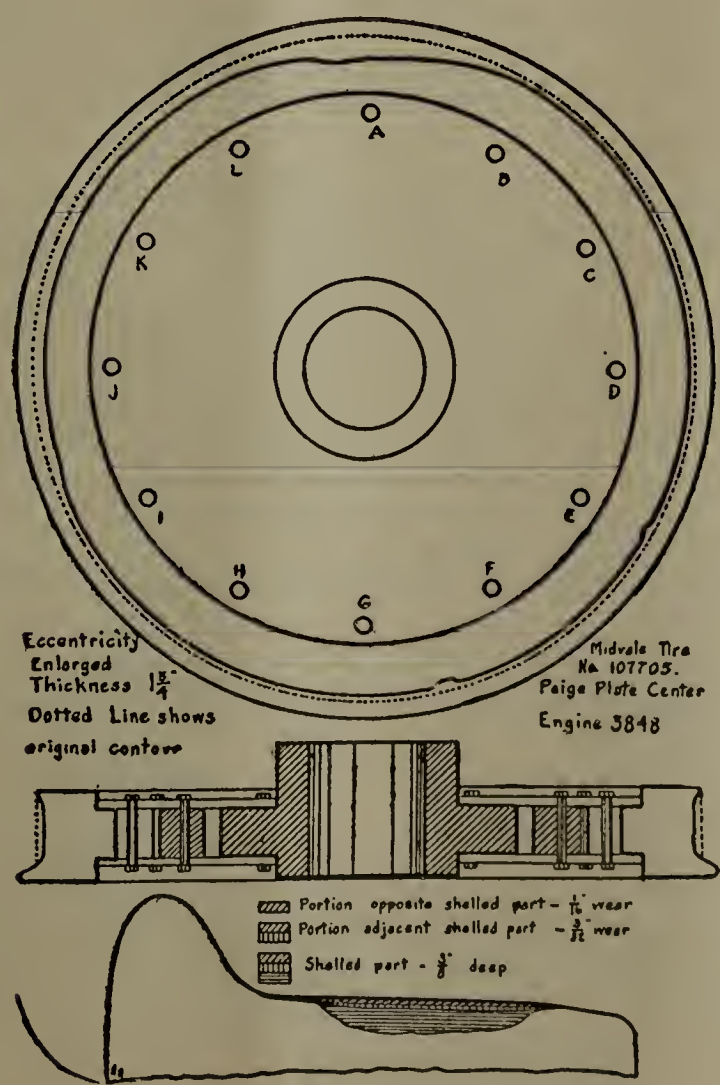

Fig. 1. — Eccentric and shelled tender tire.

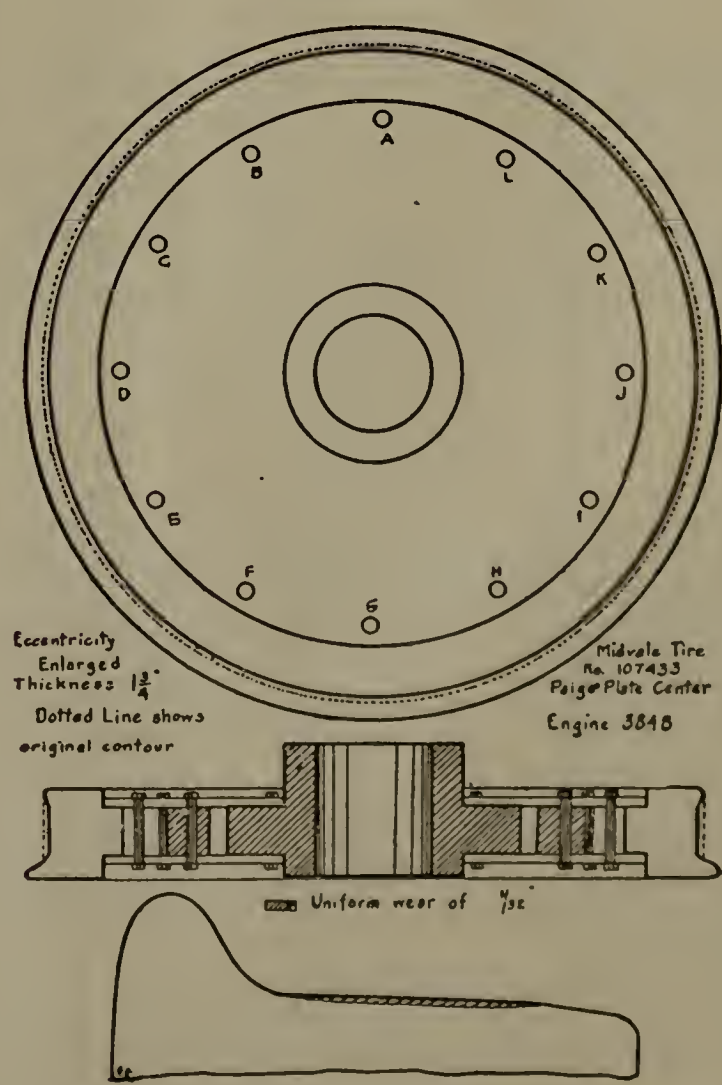

Fig. 2. — Unshelled mate from same axle as fig. 1.

Shop Kinks

An item good enough to publish is good enough to pay for

CHICAGO & ALTON R. R.

By R. J. McGrail.

(Continued from November Issue.)

Figure 8 shows a neat arrangement for a paint shop. A solid platform holds the rough barrels, which contain the various oils, paints and varnishes. These barrels in their natural state make an unsightly appearance and the idea was conceived of placing a casing over them, made of light steel or galvanized iron. These casings are painted neatly and each one is labeled. Under the faucets is placed a shallow trough, as shown in detail on sketch, thus eliminating, to a great extent, the possibility of a floor covered with a mixture of paints.

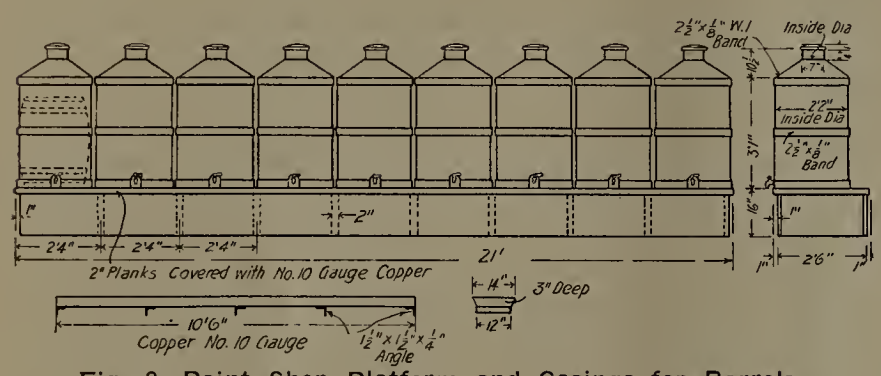

Fig. 8—Paint Shop Platform and Casings for Barrels.

Figure 9 shows a shaft hanger support and details, to be used under a balcony or elsewhere when the upper story or roof is supported by "I" beams. The support is made up of two 4-in. channels, spaced with blocks (s) and clamped together with bolts (b-1). The plates (p-1) and (p-2) are used for clamping the support to the "I" beams by means of bolts (b-2) and (b-3). (c-6) is a filler block used for filling in order to keep the support level where the "I" beams above

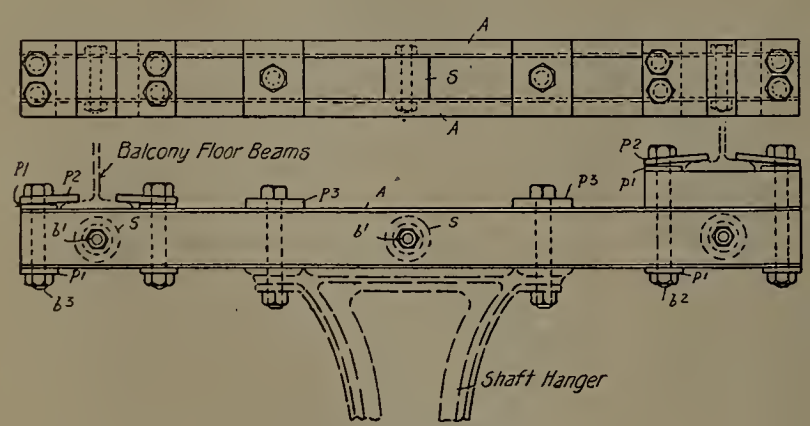

Fig. 9—Shaft Support.

are of unequal depth. This arrangement makes an easily adjusted device for supporting shaft hangers, one great advantage being that it can be easily shifted from one location to another, when changes in the location of machinery are necessitated.

Figure 10 shows a small forge for use in a pipe shop. It makes a very complete arrangement for heating copper pipes which require bending.

Figure 11 is a core-maker's bench. The legs are cast iron while the top and sides are composed of 2-in. plank, the top being covered with ⅛-in. steel plate. This combination, without the back and sides, makes a very desirable machinist's bench.

Figure 12 shows an arrangement for getting rid of the fumes of a lye vat placed inside a building. The vat shown here is located in a machine shop, wheel and truck department.

Suitable coverings are placed over the top of the vat by the

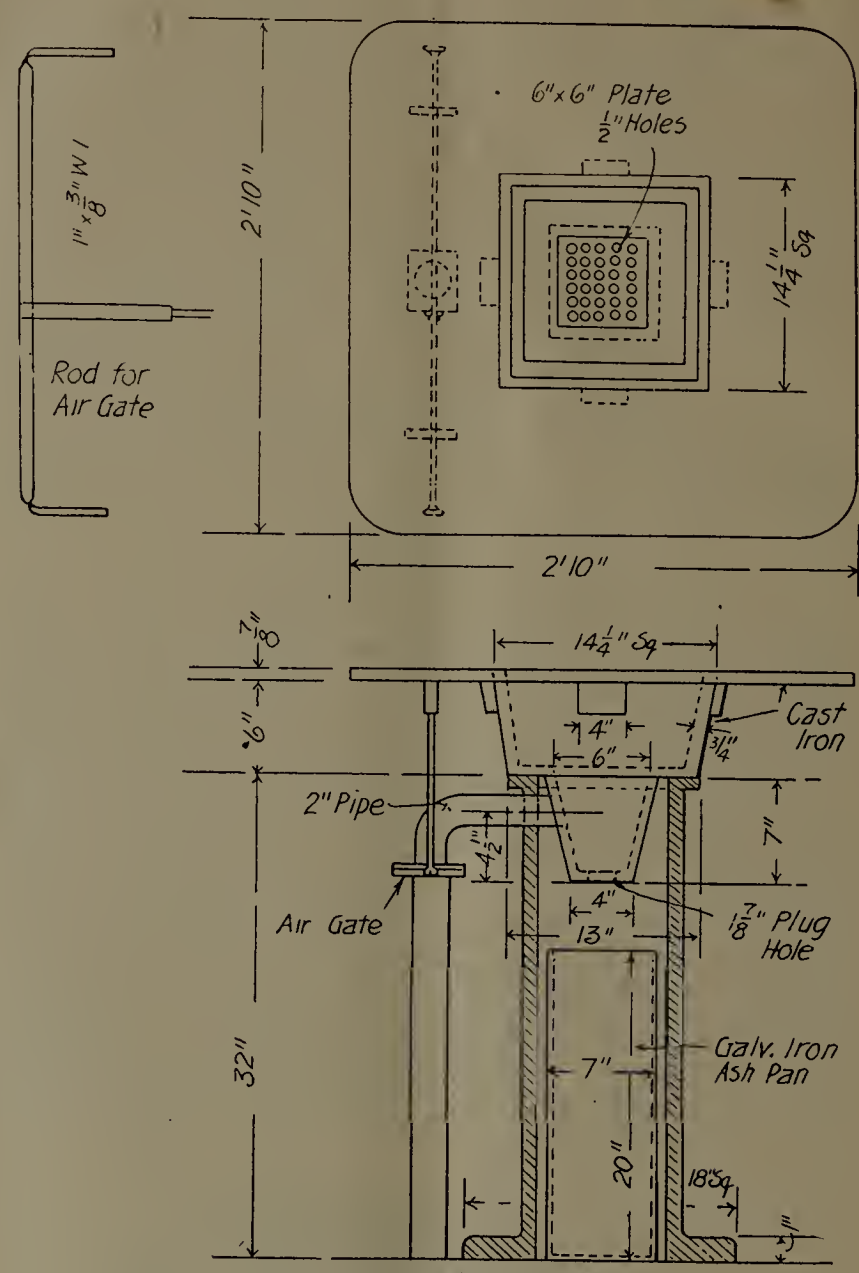

Fig. 10—Pipe Shop Forge.

traveling crane, and the fumes are taken off through the 1½-in. x 3-in. openings in the sides by means of an exhaust fan placed on the balcony. This fan, driven by a one horsepower motor, sucks the fumes from the vat and blows them out to the atmosphere through the roof. The idea of having a lye vat of so large proportions within a building does not appeal on first thought to most people who have had very much to do with it, but all will acknowledge the convenience of it, and with an exhaust equipment as shown here it is a very desirable acquisition to any department or shop which has to do with the handling of greasy parts of machinery for repairs.

Figure 13 is a mercury lamp outfit for blueprinting. The

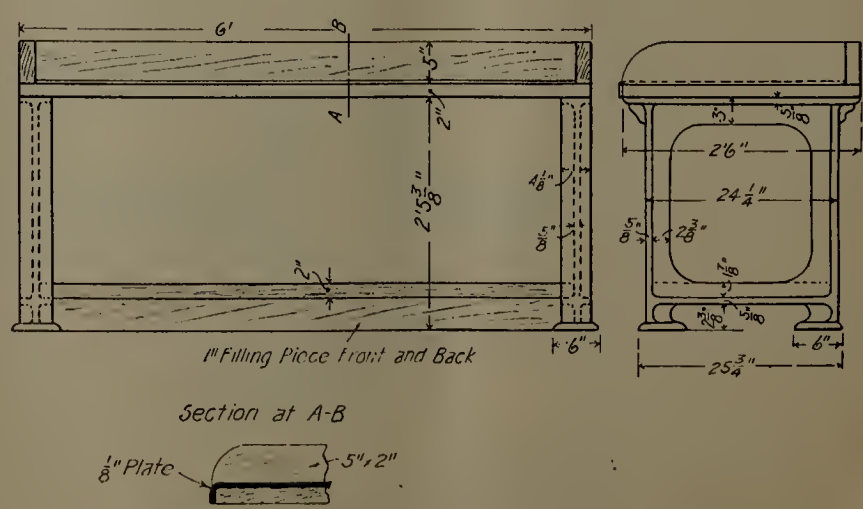

Fig. 11—Core Maker's Bench.

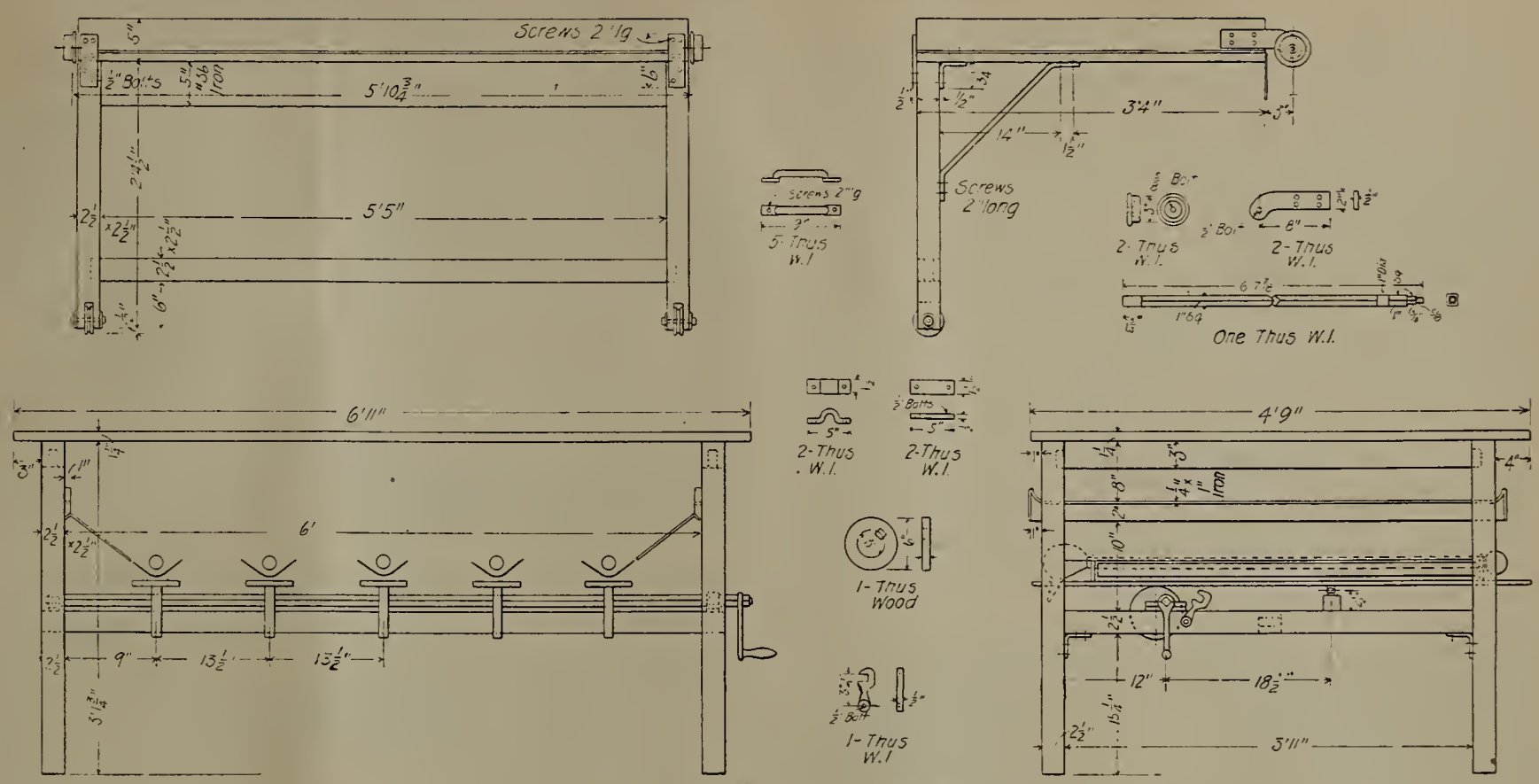

Fig. 13—Blue Printing Frame.

top is intended for use as a table for cutting and trimming blueprints. The printing frame is made so that it may be run in and out over the lights, which are placed below and reflect upwards. The lever to the right is for tilting the lamps when starting operations. This makes a very complete and inexpensive blueprinting outfit.

Figure 14 shows an arrangement of tools for laying off shoes and wedges. To those who have had the experience, the drawing will be self-explanatory, the tools being shown in their respective positions. The shoe and wedge are held in their places by the spreader (d). It had been the custom in this shop to lay off the shoes and wedges to a ¾ in- gauge (c), attached to parallel block (a), which rests on top of the frame and on which the T-square (b) is placed for scribing the lines to show the depth of planning required. The straight edge (e) and clip (f) are used for transferring the lines to the opposite frame.

Figure 15 shows a stand for giving boiler tubes a rolling and beading test and is a very useful arrangement where tests of this nature are made frequently. It occupies but little floor space and with its own tool equipment is a very compact little time saver, only requiring a few moments to make a test which otherwise would take considerable time in hunting up tools, etc.

Figure 16 shows a sectional view of a telescoping bolt starter. The device is placed in position and the air is admitted to the outer cylinder by opening the cock (a). This increases the pressure back of the inner cylinder at point (b), and forces it upward until the snap (c) is forced against

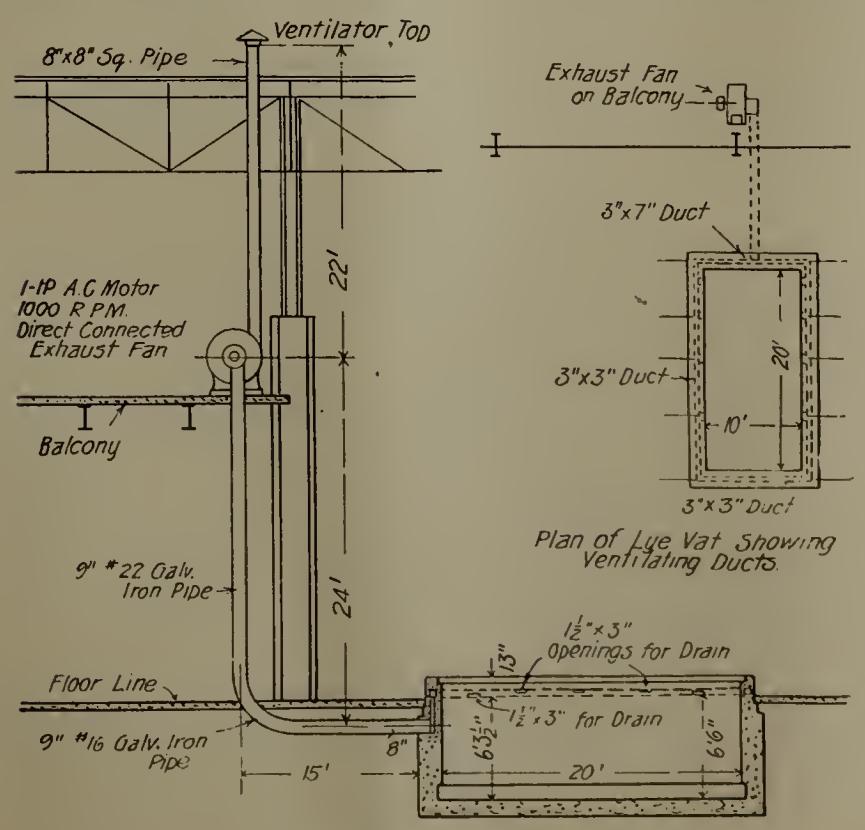

Fig. 12—Lye Vat Exhaust.

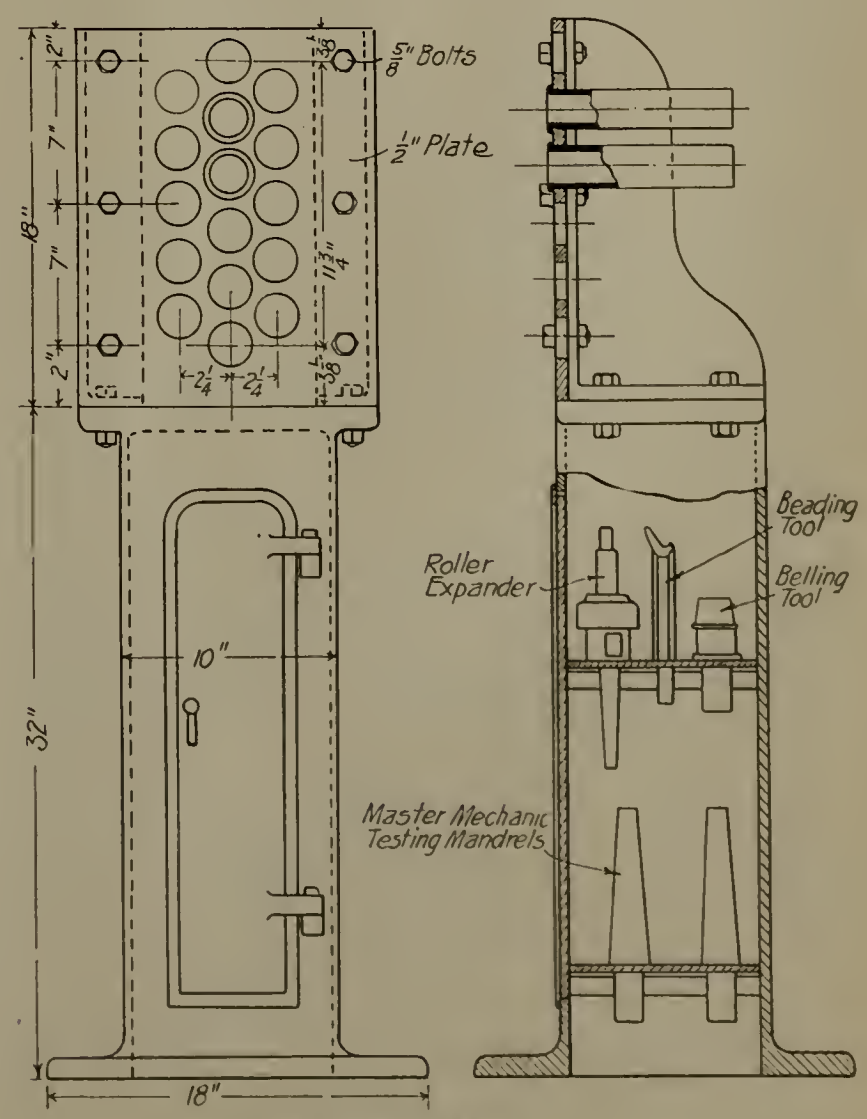

Fig. 15—Flue Tester.

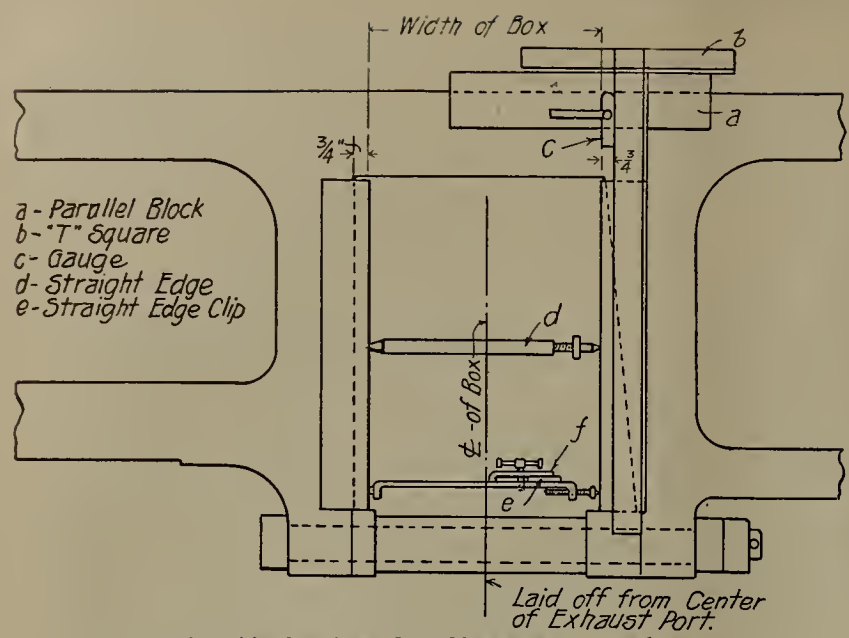

Fig. 14—Laying Off Shoes and Wedges.

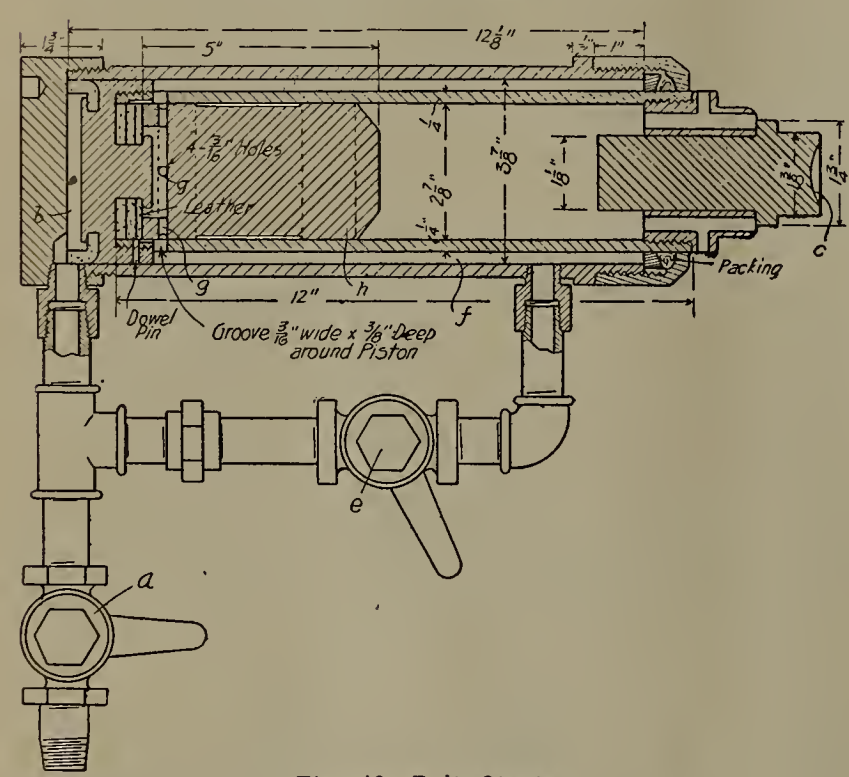

Fig. 16—Bolt Starter.

the bolt. Cock (e) is now opened, allowing the air to pass into the outer cylinder at point (f), and from there to the inner cylinder through the 3/16 in. opening shown at (g). This forces the plunger (h) against the snap (c) which in turn hits the bolt driving it out.

Figure 17 is a flue heating furnace, the main feature of which is the burner which is shown in detail. The oil is allowed to flow in through the pipe at the top of the burner, while the air under pressure from the end carries the drops of oil into the furnace as they trickle down the sloping part of the burner.

Figure 18 is a portable fuel oil heating and testing plant. With this arrangement locomotive boilers may be tested in the erecting shop or boiler shop, as desired. The outfit consists of a roller bearing truck on which is placed a tank for the purpose of holding fuel oil. The burner (a) is made from a piece of arch tube 3 in. x 13 in. long, plugged at one end. Into this plug is screwed 2½ in. x ¼ in. reducing

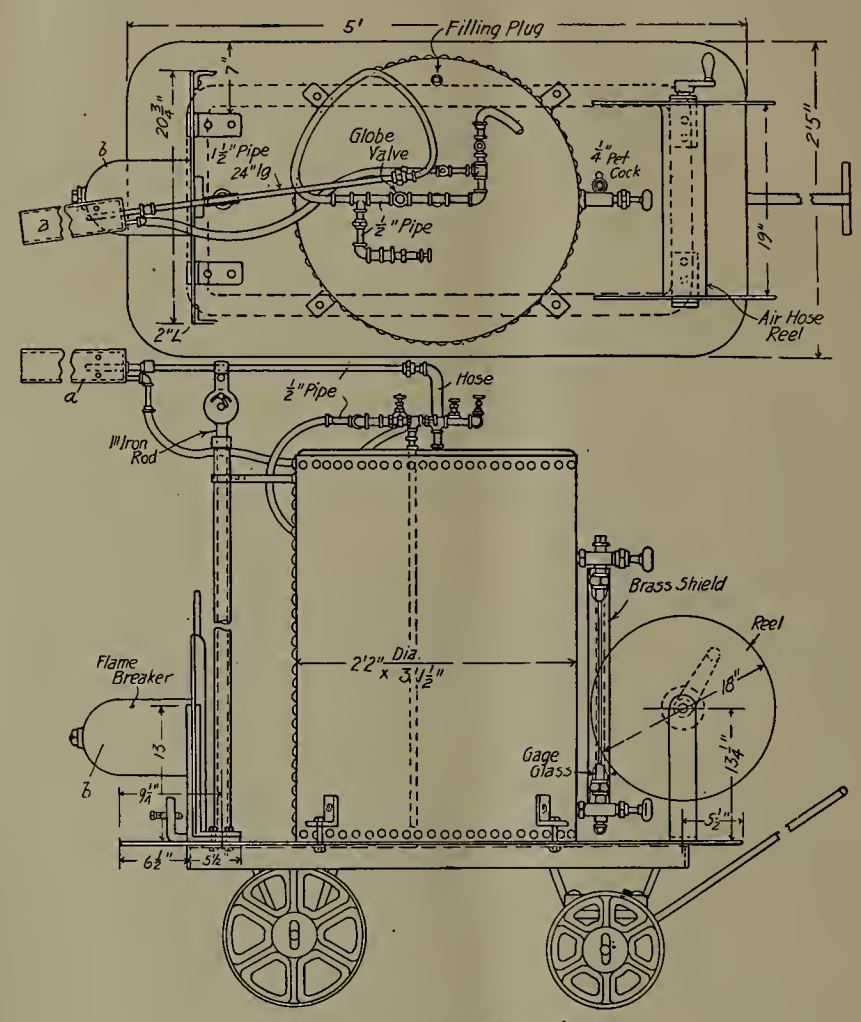

Fig. 18—Portable Fuel Oil Plant.

bushing with a piece of ¼ in. pipe, 4 in. long, projecting into the tube. This conveys the oil. About 3 in. from the back end of the burner is a series of holes ⅝ in. dia. to admit air, and in addition to this, compressed air is supplied through a ¼ in. pipe below the oil pipe. The truck is placed at the back of the boiler with the burner a few inches from the door.

The frame breaker (b) is arranged so that it can be clamped on the fire door, projecting inside the firebox. When the burner is ignited, the flame strikes this breaker spread-

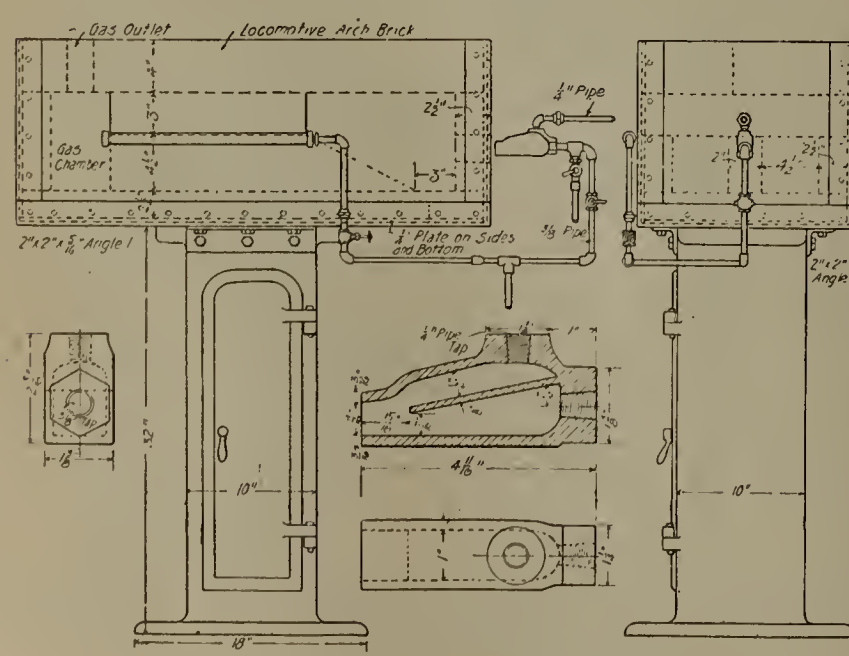

Fig. 17—Flue Heating Furnace.

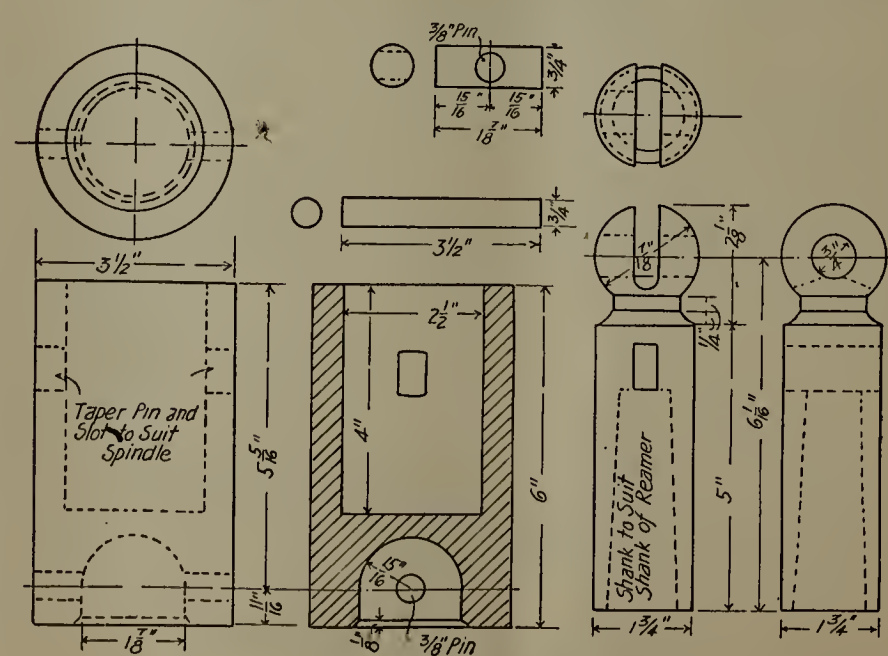

Fig. 19—Universal Joint for Reamer Socket.

ing it around inside the firebox, making a very effective heat.

Figure 19 shows a universal joint socket used on a drill press when using a large reamer. In using a reamer in an ordinary drill socket it was found that a number of these tools had become badly chipped, and on looking into the matter is was found that the drill socket held the reamer too rigidly. It was then decided to use a universal joint similar to that shown on sketch, and which has proved very satisfactory.

PROGRESS IN RAILWAY ELECTRIFICATION.

Among the noteworthy installations of complete electrical equipment and of motors and control that have been made or contracted for by the Westinghouse company during the past year may be mentioned the following:

Boston & Maine R. R., Hoosac Tunnel Electrification, 11,000 volts, single phase, complete equipment.

New York, West Chester & Boston R. R., 11,000 volts, single phase. Motors and control.

Rock Island Southern R. R., 11,000 volts, single phase. Motors and control.

Piedmont Traction Co., 1,500 volts, direct-current. Complete station, car and locomotive equipments.

Oakland & Antioch Traction Co., 600-1,200 volts, direct-current. Motors and control.

The Cambridge Subway, 600 volts, direct-current. Motors and control for all cars.

The Boston Elevated Ry., 600 volts, direct current. Motors and HL control for surface cars.

The Long Island R. R., 600 volts, direct-current. Motors and control equipment for extensions.

Interborough Rapid Transit Co., 600 volts, direct-current. One thousand (1,000) pneumatically operated line switches were furnished for New York subway cars.

Pennsylvania R. R., 600 volts direct-current, complete equipment for the New York City terminal electrification.

In the following paragraphs is outlined the general trend of progress and some illustrative examples of recent noteworthy installations are given.

Single-Phase System.

The single-phase system has been adopted for three very important projects: The Hoosac Tunnel electrification, the Rock Island and Southern, and the New York, Westchester and Boston installations. The fact that this system was selected after the most exhaustive studies effectively substantiates the claims of its advocates as to the advantages of single-phase operation for certain conditions. Seventeen additional single-phase locomotives have been purchased by the New York, New Haven & Hartford R. R. for operation on its main line. The single-phase operation of the recently electrified Hoosac Tunnel installation is eminently satisfactory.

High Voltage Direct-Current System.

The Piedmont Traction Co. has contracted for complete equipment for its 1,500 volt direct-current system, the details of which are outlined in the following paragraph. About 280 miles of track are to be electrified for passenger and freight service. This is the longest direct-current road in the country and the voltage is the highest ever used for a direct-current railway in the United States.

Interpole Railway Motors.

The demand for interpole railway motors has increased wonderfully during the past year. Many companies that did not at first sufficiently appreciate the advantages of interpole construction and were slow to change over from non-interpole motors are standardizing motors of one of the interpole types. Interpole motors are being specified for nearly all new equipment and can now be furnished for practically all commercial railway applications. The latest edition to the family is the Westinghouse, No. 323, a 32 h.p. motor designed for use on small cars. Interpole motors have not heretofore been made of such small capacity and many companies operating small cars that have not in the past been able to avail themselves of the advantages of interpole construction can now do so.

Forced Ventilation.

The advantages of forced ventilation for railway motors are now being appreciated by operators. Forced motor ventilation has been used for the Westinghouse motors installed on the Long Island R. R. and the Pennsylvania R. R. motor cars and has proven particularly successful. Forced ventilation has frequently been used on Westinghouse locomotives. The New York, New Haven and Hartford, the St. Clair Tunnel, the Spokane and Inland, and others have been so equipped.

Unit Switch Control.

There has been a feeling among operators that unit switch control can be used with economy only for the control of long trains or for heavy high speed cars. That this impression is erroneous is indicated by the order recently placed by the Boston Elevated for fifty equipments of unit switch control for its surface cars. This makes a total of 100 surface car unit switch equipments operated by this company. (See a following paragraph.) Unit switch control is becoming popular not alone because it tends to reduce car maintenance, but because it removes all heavy current carrying parts from car platforms and eliminates all annoying troubles and claims resulting from controller burn-outs.

Hoosac Tunnel Electrification.

The Hoosac Tunnel electrification included the equipment of a total of 12.31 miles of track for electrical operation and five electric locomotives and power house equipment. Of the total track electrified, 50,100 ft. is within the tunnel, which is double-tracked and 4.75 miles long, the longest tunnel in the country. Previous to electrification the tunnel limited the traffic on the division because of the steam and smoke incidental to steam operation. Block signals were not feasible because they could not be seen. Passenger traffic was inconvenienced by the dirt, smoke and gases. Since electrification the air in the tunnel is always pure and clean.

A Westinghouse electric locomotive hauls through every train and its steam locomotive with banked fires. Block signals are being installed and the capacity of the tunnel will be increased over 100 per cent. The Westinghouse Company furnished the entire equipment including all control apparatus station equipment and the 11,000 volt overhead line material. Six locomotives have been in service since the latter part of May, each having a rating of approximately 1,500 h.p. Half of these are geared for a speed of 30 miles per hour for hauling heavy freight trains. The others are geared for 50 miles per hour and are used for handling the passenger service.

Rock Island & Southern Railway.

The Rock Island Southern commenced operating its 11,000 volt single-phase road early in the year and the equipment has given complete satisfaction. The road is 49.7 miles long and the passenger cars are each equipped with four No. 132-C motors, rated at 100 h.p., and with unit switch control. One express is equipped with four No. 156 motors and unit switch control and one freight car is equipped with four No. 156 motors and unit switch control.

New York, West Chester & Boston Ry.

The New York, West Chester & Boston, a subsidiary of the New York, New Haven & Hartford, is also being electrified with the single-phase system at 11,000 volts. The equipments will be used for high speed passenger service with multiple unit cars and will be interchangeable with those on the New Haven line, but will operate on alternating-current only. This road will start from 180th street, New York City, and termiuate at White Plains, fifteen miles distant. A branch two miles long leaves the main line five miles from 180th street and extends to New Rochelle. Energy will be delivered to the cars at 11,000 volts, 25 cycles, and the equipment includes 30 motor cars each propelled by two Westinghouse No. 409-B motors with multiple

unit control, and one 80 ton switching locomotive equipped with quadruple No. 410 motors.

New York, New Haven & Hartford R. R.

The New York, New Haven & Hartford has been extending its electrified zone and has purchased seventeen additional Westinghouse single-phase locomotives with a view of establishing the best class of service. This order, coming in the wake of the initial orders, constitutes further and conclusive evidence as to the reliability of Westinghouse single-phase apparatus. The latest single-phase locomotive ordered by the New Haven Railroad is equipped with four driving axles, but has eight motors, two motors geared to a quill surrounding each axle. This equipment, which at first appears more complicated, is in reality lighter and cheaper than a locomotive of the same capacity having four motors of the same total capacity. This type permits the use of small motors for locomotives of large capacity and the matter of repairs is greatly simplified. Each of the small motors has practically one-half the number of brushes, brush-holders, and armature field coils, etc., as has one large motor, so that there is the same total number of these parts on the locomotive as on one equipped with large motors. Both motor pinions drive the same gear which permits the use of only one gear on the quill, while the large motor requires twin gears. It is believed that this type of locomotive marks a decided advance in the art of building electric locomotives.

The method of controlling the speed of electric railway motors by varying the strength of the field has been developed to a thoroughly commercial basis by the Westinghouse Company. The speed of the passenger locomotives on the New York, New Haven & Hartford Railroad, when operating on direct-current, is controlled by the varying strength of the motor fields. This system was so eminently successful, having been operated about four years, that the same plan was adopted for the Pennsylvania railroad locomotives for its New York City Terminal

Pennsylvania Railroad Electrification.

These, the most powerful motors in existence, haul all the trains from Manhattan Transfer near Newark, New Jersey, into the new station in the heart of New York City. The use of field control for speed regulation on these locomotives enables them to run when necessary at very high speeds and at the same time to start the heavy limited trains and to operate them over certain sections at low speeds with minimum power consumption. Each locomotive weighs, complete, 157 tons and exerts a maximum draw bar pull of 79,200 lbs. The normal speed with full train is 66 miles per hour. The operation of the Pennsylvania locomotive has been conspicuous for its very successful record.

On the Pennsylvania locomotives the motors are connected, first, with full field series; second, normal field series; third, full field parallel; fourth, normal field parallel. This method gives four highly efficient operating speeds. The full field gives an enormous tractive effort at slow speeds and the normal field permits them to haul comparatively heavy loads, at high speeds, thus enabling the motors to efficiently operate over a much wider range of speed than would be possible without the field control. This whole Pennsylvania installation has been remarkably successful. The commutation of the motors is perfect, irrespective of field strength. Their operation demonstrates conclusively the great flexibility of modern interpole railway motors, and their adaptability to conditions which could not be satisfied by non-interpole motors.

Pacific Electric Railway.

The Pacific Electric operates a network of 600 volt, ballasted and signalled, roads radiating from the city of Los Angeles, California. Los Angeles, with a population of but 320,000, operates more interurban trains per day than the nine most important middle western cities with an aggregate population of 4,000,000. The departures per day from Los Angeles recently amounted to 1,882 over 29 routes. The cars must operate at low speeds in the cities and at high speeds in the country, so that the current consumption at slow speeds will not be excessive; with the gear ratios necessary for high speed limited service, Westinghouse field control has been applied. Westinghouse field control is destined to be the solution for interurban problems, in that it permits, with moderate gear ratios, high interurban speeds and slow city speeds.

Piedmont Traction Company.

The Piedmont Traction Company and the Greenville, Spartanburg & Anderson Railway Company have contracted for equipment using 1,500-volt direct-current apparatus. These roads form two branches of a new railway system in North and South Carolina. This is the largest electrification project ever undertaken, as the property consists of about 280 miles of track and the equipment will include both cars and locomotives, the latter to be used for freight service.

Electro-pneumatic control—which is peculiarly adapted for use on high tension direct-current voltages—will be used, and while the motors will be of standard interpole construction, the matter of commutation has been given special attention. The control for the passenger cars, express cars, and locomotives will be standard HL unit switch type, but a special feature is in the dynamotor compressor. This form of compressor is designed for use in connection with the air-brake outfit. The air compressor is driven by a continuously running dynamotor instead of the usual intermittently running comprsessor motor. The dynamotor drives the compressor by means of a friction clutch of the standard automobile type, which is automatically cut in or out when the air reaches a certain pressure limit. The dynamotor ordinarily furnishes power for the control and lights, but in this case it serves also to operate the compressor making unnecessary the use of a separate motor.

Boston Elevated Railway.

The Boston Elevated is admittedly one of the most successful and economically administered city traction properties in the country. It was one of the first concerns to appreciate the advantages and economies of interpole motors and unit switch control and to adopt them. Fifty cars equipped with No. 306 motors and HL control gave such extraordinary satisfaction that fifty additional duplicate equipments were ordered. The cars on which these equipments are to be used, although they operate on the surface, connect with the Boston Elevated Lines. One of the factors that influenced the company to adopt HL control is that, with it, all heavy-current carrying parts are mounted under the car bodies away from the platforms. Hence there cannot be platform controller burn outs with their attendant delays in service, destruction of equipment and accidents to passengers that result in expensive claims. With HL control the contactors are forced together with air pressure and apart by powerful springs. Positive, reliable making and breaking of the contacts is assured regardless of the line voltage.

Cambria Subway.

The Cambria Subway in Boston is a new and notable rapid transit project. This subway, which is almost completed, will reduce the schedule between Harvard Square, Cambridge and Park Street to eight minutes. There are but two stations between terminals, one is in Central and the other in Kendall Square. The subway will cost $8,000,000. The electrical energy will be supplied to the cars at 600 volts direct-current. All of the car equipment, consisting of outfits of No. 300 interpole motors and AL unit switch control, will be furnished by the Westinghouse Electric & Manufacturing Company.

Long Island Railroad Electrification.

The Long Island is doubtless one of the most progressive and one of the most representative electrified steam railroads in the country. Its equipment has now been in service long enough to prove its adaptability. It operates at 600 volts, direct current. The trains operate from the Pennsylvania Station, New York, through the East River Tunnels, and from the Flatbush Avenue Terminal, through the Atlantic Avenue Tunnels, to the subur-

ban territory and resorts on Long Island. Nearly 200 miles of track have been electrified since 1903, in which year electrical operation was initially adopted. The direct-current, third rail system was adopted to permit interchange of cars with the subway and elevated lines of New York City.

A feature of the latter electrical equipment of the Long Island Railroad cars is the application of forced ventilation for the motors used on the high speed trains. It was desirable to obtain the highest possible outputs from the motors and maximum output was secured through the use of cooling air which is directed by a motor-driven fan into the motor frames. Forced ventilation is often advantageous and has frequently been used on electric locomotives by the Westinghouse Company with uniformly successful results, but it is only recently that operators are appreciating its advantages as applied to motor car applications. The Long Island car equipments consist of two 225 h.p. motors and automatic unit switch control.

Oakland & Antioch R. R.

The Oakland and Antioch, of California, has recently purchased quadruple 75 h.p., 600-1,200 volt motors, 115 h.p., 600-1,200 volt quadruple motors and one 47-ton locomotive provided with quadruple 120 h.p. motors. All are to be equipped with double and HL control. The 75 h.p., or No. 321, motors and the 115 h.p., or No. 322, motors are to be mounted on cars of the same weight. The car bodies for these will weigh approximately 20 tons and the trucks about 11 tons.

These equipments, as well as the locomotive, will operate over the lines of the San Francisco, Oakland & San Jose R. R. from the end of the Key Route to Claremont, a distance of about seven miles. At Claremont, the Antioch and Oakland cars will be uncoupled and will be operated individually; each car hauling one trailer over the lines of the Oakland & Antioch R. R. Company. On the line from the Key Route Pier to Claremont, the voltage will be 500. From Claremont to Walnut Creek, a distance of about five miles, the voltage will be 1,200, direct current. The HL control equipments will be designed to operate the motors on both 600 and 1,200 volts. On 600 volts, the motors will be in full parallel and on 1,200 volts, two will be in series and two pairs in parallel.

On the Oakland & Antioch line between Claremont and Walnut Creek, there is 4,000 or 5,000 feet of 4% grade. Later new track will be laid which will increase the distance but will reduce this grade to 2%. The road passes through a tunnel about four miles long with a 2% grade, and from this point the track is practically level to Walnut Creek.

Line Switches for Manhattan Elevated.

On systems where many cars or trains, requiring considerable power, operate in a section served by one feeder from a high capacity station, considerable difficulty has been experienced at times when a short circuit or flash over occurred on any car in a train. At such times the voltage on the entire section drops for an instant to a very low value (due to the heavy draught of current), until the fuse or circuit breaker on the car in trouble opens and stops the heavy current flow. When the heavy current flow is suddenly ruptured by the circuit breaker or fuse on the car in trouble, an abnormally high voltage is instantaneously impressed across all of the motors in the section. The abnormal voltage is due to the "inductive kick" caused by suddenly rupturing the heavy current. This high voltage frequently causes many of the motors on the tram to flash over. The original difficulty is aggravated and delays ensue.

By installing a Westinghouse line switch on each car, the possibility of trouble due to this condition is reduced to a minimum. When the voltage drops, because of the heavy current, the line switch relay acts, opens the switch, and when the surge occurs there is no circuit through the motors. Hence the only car affected is the one in which the original trouble developed. The line switch, which is in effect a very powerful circuit breaker with a no voltage and an overload release, is readily closed by the motorman by the operation of an auxiliary switch.

The Manhattan Elevated has purchased 1,000 of these electro-pneumatic line switches for its cars which are operated with type M General Electric control, and 80 complete Westinghouse HL control and interpole motors.

THE LIGHT FOR SAFETY.

By Frank R. Fortune.

Natural light has always been the criterion of that which is most desirable to obtain by artificial lighting. The broad problem in artificial lighting is how to obtain, with the comparative feeble flux of light we have at our command from artificial sources, as close an approach as possible to the character of lighting obtained from the enormous flux of daylight. With the well-known limitations of artificial light, it would, at first sight, appear impossible to reproduce in effect the conditions which obtain in daylight illumination.

The development of the science of illuminating engineering has, however, demonstrated that step by step we are changing our methods of artificial lighting and approaching more nearly the ideal conditions. The handicap of artificial light is not nearly so great as would appear.

The ability of the eye to adjust itself to a very low-working intensity of illumination makes it possible to simulate daylight conditions in the design of the artificial lighting of interiors. While we recognize this possibility, we realize that before the completion of an ideal design, there remains to be performed a mass of experimental work, investigation and research, involving a close analysis of conditions of illumination of which we have practically no data at present, and in general, a complete study of the problem from the physical, physiological and psychological standpoints.

Up to the present time, lighting by artificial sources has, for the most part, been carried on by illumination from substantially point sources. These are the sources with which we have to do for the most part at present.

In studying the principles underlying the application of artificial light to the illumination of interiors, it would be well to consider several subjects; first, flux of light; second, diffusion and direction of light; third, quality or color of light; and these studies may be defined in several items such as

Character of the illuminant
Intensity of illumination
System of illumination, etc., etc.

Let us first look at the spectrum, running from red through to violet. Considering light as a physiological effect, it will be noted that with some of the colors of the spectrum one can see more rapidly than by others. This quality is known as luminosity. The relative luminosities of the colors of the spectrum are about as follows:

Ultra-red	0
Red	12
Yellow	280
Green	1000
Violet	16
Ultra-violet	0

Therefore, it will be readily seen that the colors in which the acuity of vision is greatest are yellow and green. Let us refer to the illustration, showing the physiological effect of the spectrum, and which is the average, i. e., a medium intensity between the high and low intensities. This you will note shows a larger number of luminosities in the green than any other color.

The curve of the spectrum of the Cooper Hewitt lamp, shows a very thin band of red and orange to beyond the edge of the yellow and then takes an abrupt rise in the yellow and green and gradually decreases into the violet, while the other illuminants have almost a straight curve, practically, across the entire spectrum.

There seems to be many differences of opinion at this time as to what monochromatic light really ought to be, and I

am sure we are safe in accepting the theories of Dr. H. E. Ives and Dr. Louis Bell.

As Dr. Ives points out, the most efficient monochromatic radiation is almost in the position of the green mercury line which furnishes a very large percentage of the light of the mercury arc. For light of this wave length, Dr. Ives figures an efficiency of about 65 spherical candles per watt. The highest possible efficiency of white light in a continuous spectrum he reckons at 26 spherical candles per watt, so that the monochromatic source has a prodigious theoretical advantage and practically a considerable additional gain.

A peculiarity of the mercury light is that by taking two units, both of the same intensity, one for instance, yellow, as the flaming carbon arc and the bluish green light as the mercury lamp, by going near the lamps, the yellow seems to increase more rapidly in intensity than the green and for a very short distance the flame appears glaringly bright, while the latter disappears and shows nowhere near the same intensity, when going farther and farther away from the two lamps; and the yellow light seems to fade out more rapidly than the bluish green and has practically disappeared while the bluish green is still markedly visible. The mercury lamp, therefore, can be seen from a distance, while a flaming arc is practically invisibie.

It would therefore seem that the light of the Cooper Hewitt lamp is more penetrating than a light of a continuous spectrum. This is particularly true in mills and shops where smoke and dirt arises from the floor.

It would seem that conservation of sight should be one of the most important lines to work on in the broad subject of safety. Let us sum up now the different thoughts that come to us, first, looking at a spectrum of various illuminants, we would say that the mercury lamp has a maximum color in the yellow green, which we have shown has the greatest luminosity or seeing value.

Also on account of the length of the light giving area of the mercury lamp, shadows are eliminated more than with other form of illumination. You realize, however, that for special illumination, it is necessary to have sufficient direct light to mark the edge of the objects by their shadows and thereby improve the distinction, but at the same time, there must be sufficient diffused light to see clearly in the shadows, that is to say a proper proportion of direct and diffused light is necessary. Sharp shadows, however, are dangerous.

One of the most dangerous things in working around a mill or shop at night is going in and out of a well-lighted building. One usually finds a momentary blindness after leaving a lighted mill or shop and going into the darkness. This is due to the contraction of the pupil generally caused by the eye being under a strain in a light of high intrinsic brilliancy.

In this connection the following table which was prepared by Messrs. Ives and Luckiesh, showing the candle power per square inch, is interesting.

Carbon Arc, crater,	84,000
Flaming Arc,	5,000
Nernst Glower,	3,010
Tungsten - 1.25 w.p.c,	1,060
Carbon—3.5 w.p.c.,	400
Welsbach Mantle,	31
Cooper Hewitt,	14.9
Kerosene Flame,	9

It is a very interesting experiment to take two mills or shops with comparatively the same intensity of illumination, one lighted with Cooper Hewitt Lamps and the other with arcs or flaming arcs, and go from the Cooper Hewitt room out into the dark and perceive how readily and easily you can see almost instantly; while going from the other mill or shop, the same being lighted with arcs or flaming arcs, it is necessary as soon as one steps into the dark to stop and

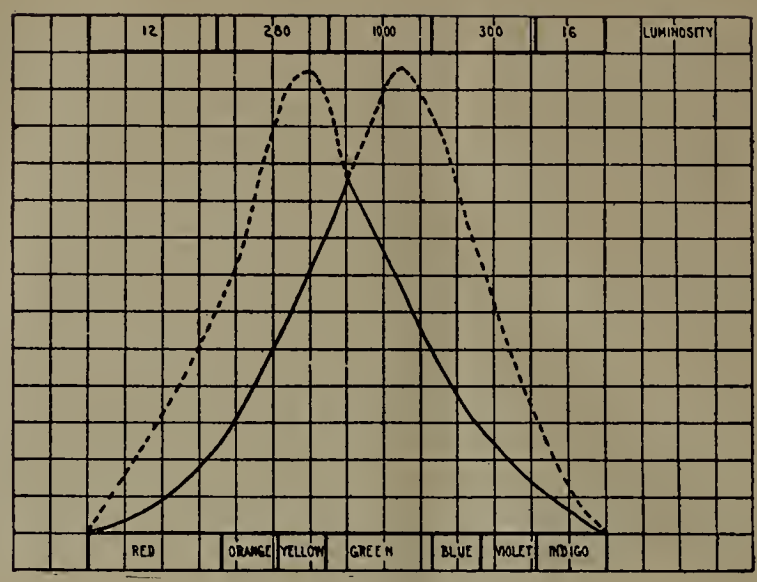

Light for Safety.

allow the eye to readjust itself for the new conditions. There is a blindness which seems to come over one. This is an important item which also should appeal to the "safety side" of industrial illumination.

And in closing, I wish to bring out very forcibly the subject of glare. At a recent meeting of the London Illuminating Engineering Society, the best definition for glare seemed to be "Light of Place." I believe that glare and high intrinsic brilliancy go hand in hand and should be dealt with as a dangerous foe to safety. I do not think that I can impress too strongly the advisability of adopting a system of illumination that has a low intrinsic brilliancy and has an absence, to the greatest possible degree, of glare.

LOCOMOTIVE NETTING MACHINE.

The accompanying illustration shows a manipulating machine for locomotive front end netting. The device was built by J. T. McGrath, superintendent of rolling stock of the Chicago & Alton at the time he was in charge of the Battle Creek shops of the Grand Trunk.

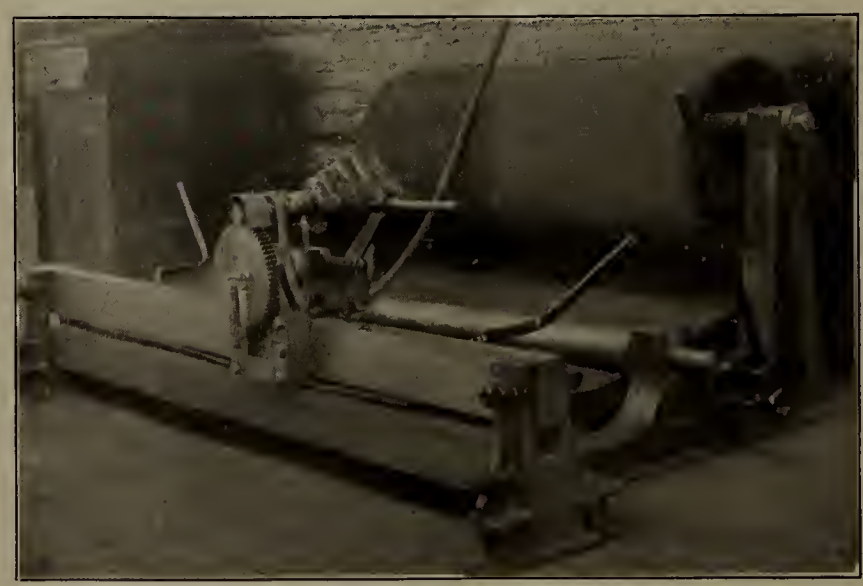

Locomotive Netting Machine.

The customary practice in cutting netting in most shops is to use from three to four men to unroll it, and one more to cut to a line with a hammer and chisel.

With a machine of this kind a roll of netting is placed on the machine on its receipt from the manufacturers. One man can operate it, handling the roll of netting simply by manipulating the ratchets shown on the side of the photograph, thereby doing away with the labor of from two to three men and cutting as many pieces of netting as required without any damage to the strands of netting in the balance of the roll.

MODIFICATION OF THE WALSCHAERT VALVE GEAR.

By M. R. Reed.

The first locomotives equipped with Walschaert Valve Gear to be used on the Vandalia R. R., were of the Mogul type for freight service and were built in July, 1906. There were only three of these engines, but in the following July eleven more were purchased, making fourteen in all of the type.

These locomotives were equipped with twelve-inch piston valves, having 7/8 inch steam lap and a constant lead of 3-16 inch. From the outset these locomotives gave poor service and no amount of "doctoring" seemed to do them any good. They could not begin to compare with another class of Mogul freight engines of the same size and design with the exception of slide valves and Stephenson link motion.

They were all very extravagant in the consumption of coal and water and would not start or haul more than three-fourths of their rated tonnage. From observations on the road it was apparent that this amount of lead in full gear was excessive for starting a heavy train, hindering rather than helping. The extravagant use of coal and water was attributed to the short steam lap of the valves and was overcome by substituting valves having 1 1/8 inch steam lap. The problem now was to make these engines start and haul their rated tonnage.

The plan was finally evolved to retard or throw back the eccentric crank center enough more than 90 degrees behind the main crank pin to take away the lead in full gear forward motion. This being the only change made in the gear we would still get the amount of lead in mid-gear, and approximately so in running cut-off, that the combination lever was proportioned to give. Of course whatever amount of lead was taken away in full gear forward motion was added to the lead in back motion, but this was not found objectionable in road engines running forward practically all of the time.

This modification of the gear left us all the attendant advantages of an outside gear combined with the advantages of variable lead. This modification is made possible by the fact that the motion of the valve is derived from two sources, the eccentric crank and the combination lever. In full gear the motion of the valve is for the greater part controlled by the eccentric crank while in mid-gear the effect of the eccentric crank is entirely cut out and the motion is imparted to the valve by the combination lever only, and is equal of course to twice the amount of the lap plus lead. In hooking up the valve motion from full gear to mid-gear, the effect of the eccentric crank is gradually reduced and that of the combination lever gradually increased, so that in effect we made it a variable lead gear. This arrangement overcame all our troubles from this source and made the engines first class.

We have gone through this same experience with another class of locomotives, a heavy consolidation type, for freight service, the trouble, remedy and results being the same as cited above. As a consequence this modified gear is the

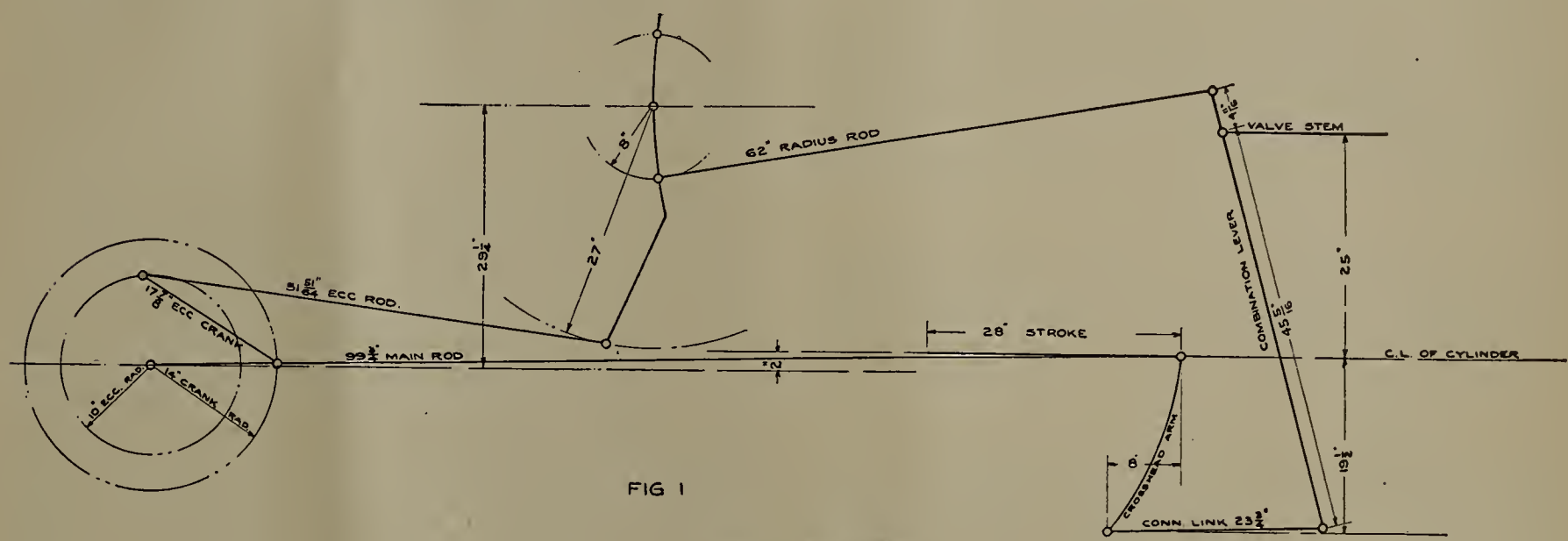

Modified Valve Gear.

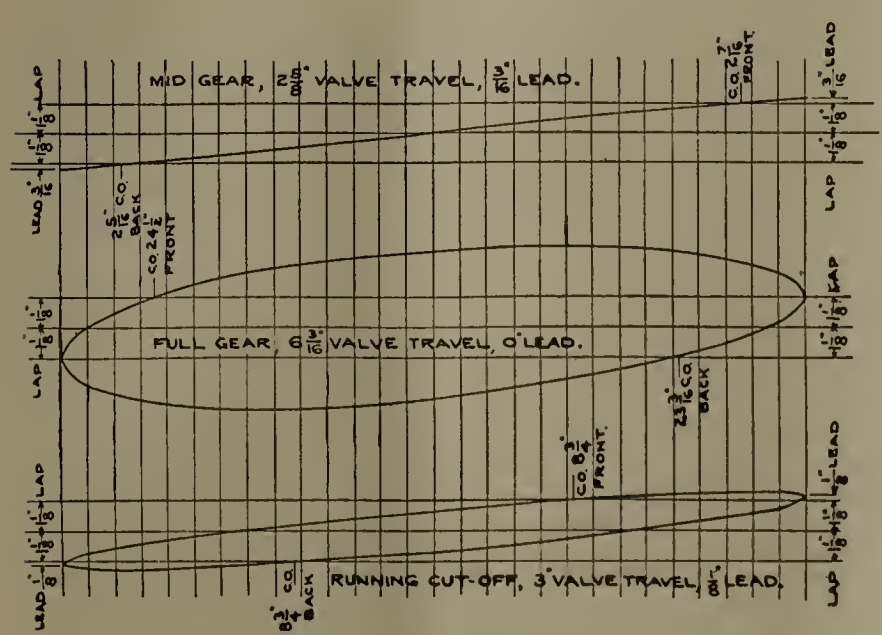

FIG. 2
Modified Valve Gear.

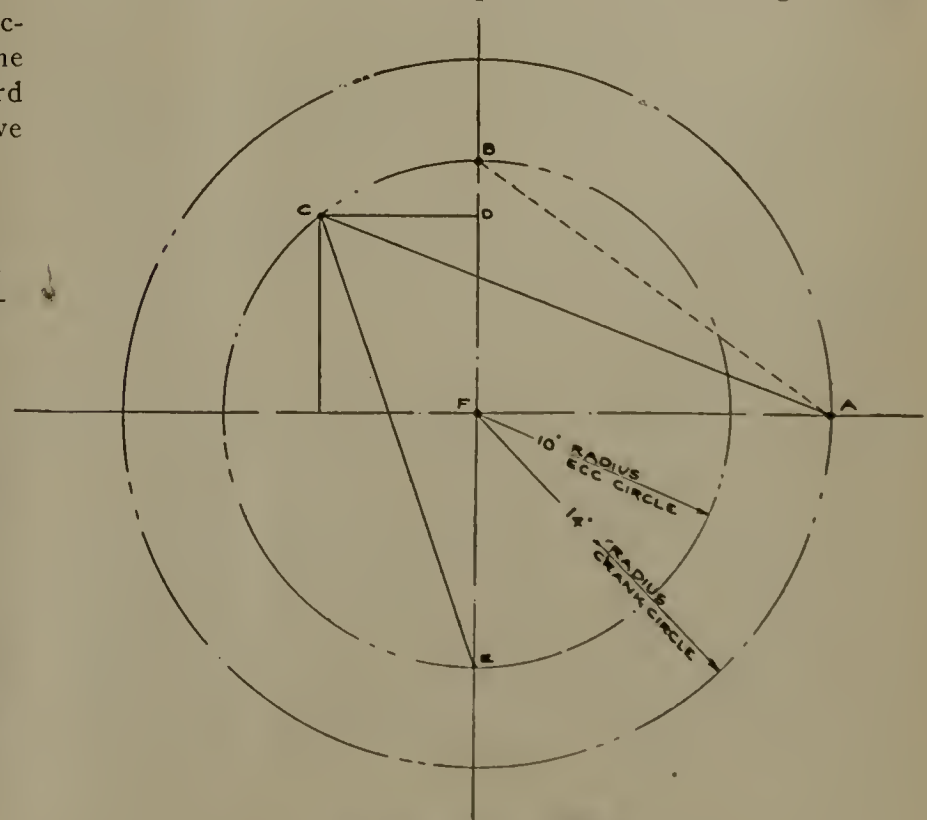

FIG. 3
Modified Valve Gear.

standard arrangement for all locomotives on the Vandalia Railroad, having the Walschaert gear; the Pacific type passenger locomotives, however, are set with 1-16 inch lead in full gear forward motion instead of line and line as are our freight engines.

Fig. 1 shows a diagram of the gear as applied to the Mogul type, freight locomotives having piston valve with inside admission; Fig. 2 a theoretical diagram of the valve motion in mid-gear, full gear and running cut-off, and Fig. 3 shows to an exaggerated scale the retardation of the eccentric crank.

In Fig. 3, A is the crank pin center, B the eccentric crank center for the standard Walschaert gear, C the eccentric crank center for the modified gear, and F is the wheel center. CD represents the amount the eccentric crank center is retarded, and AC the length of the new eccentric crank which is equal to

$$\sqrt{(AF + DC)^2 + \overline{DF}^2}$$

CD or the amount the eccentric crank center is retarded of course depends upon the reduction of lead wanted and the proportions of the valve gear parts. For the gear shown in Fig. 1, this amount is equal to

$$\frac{3}{16} \times \frac{50}{45.3125} \times \frac{27}{8} = .7 \text{ inches}$$

Having found the value of CD we can by similar triangles find the value of BD and therefore DF. For the gear in question BD is found to be .03 inches which makes DF = 9.97 inches. Consequently the length of AC of the new crank arm equals

$$\sqrt{\overline{14.7}^2 + \overline{9.97}^2} = 17.77 \text{ inches.}$$

In practice, however, we have found that it is necessary to retard the crank slightly, more than the theoretical amount in order to get the required reduction in lead in full gear, on account of the slight slip of the link block, lost motion, etc., which accounts for 17⅞ inches being shown for the length of the eccentric crank in Fig. 1, instead of 17.77 inches, the theoretical value.

The center C, of the new eccentric crank, must of course be kept on the same circle in order to maintain the same valve travel.—*Rose Technic.*

USE OF DENATURED ALCOHOL IN RAILWAY SERVICE.*

By Michael Schwarz.

Alcohol has been used in Europe to a great extent for the last twenty-five or thirty years. Especially in Germany it has been used with remarkable success for lighting, heating and cooking purposes, and in some instances for driving motors. Our government being encouraged by the successful use of alcohol in foreign countries, Congress passed a law removing the tax from denatured alcohol, amounting to $2.08 on each gallon.

Denatured alcohol is distinctly a product of agriculture. It may be distilled from corn, potatoes and other farm products. It is therefore the ordinary alcohol of commerce to which the word denatured is applied to signify that its nature has been changed, and rendered rather undrinkable.

While the extent to which denatured alcohol will be used in this country cannot be safely judged from the progress of the industry in other countries, some facts may indicate what is possible under present regulations. England has had denatured alcohol since 1855; but it is not an agricultural country, and therefore much of her alcohol has been imported. In Germany, an agricultural country, where the conditions most closely resemble those in the United States, and where the use of denatured alcohol has been increased from 3,600,000 gallons in 1887, to 26,000,000 gallons in 1904, or over seven times in fourteen years.

Mr. C. J. Zintheo, of the United States Department of Agriculture, finds: "Special documents showing that in the United States alcohol was used for lighting, cooking and industrial purposes in the early sixties, and that prior to 1861 the manufacture of spirits was free from all special taxes and supervision, as much on the part of the Union as on the part of the states which compose it. It resulted from this freedom that alcohol served a multitude of industrial uses. The production was enormous, amounting to 90,000,000 gallons annually, from the distillation of corn. Large quantities being used at that date for lighting purposes. In 1864 the city of Cincinnati alone used twelve thousand bushels of corn per day for distillation, and because of its low price, alcohol was used as fuel for the domestic kitchen and laundry. The establishment and successive increases of the tax on spirits had the result of changing all these industries and in some cases of destroying them."

For years the question of properly lighting railroad stations, not only the country flag station, but the waiting rooms in good sized towns and small cities as well, has been a serious one for the companies. Of all the dark, dreary, shadowy, "spooky" places in the universe, the average waiting room of the country station at night stands pre-eminent. This feeling of darkness and gloominess on the passenger's part is, of course, intensified by his irritability of "waiting," even though the train appears on scheduled time.

In the past it has been almost impossible to find a suitable fuel for illuminating these out-of-the-way places. Electricity and gas are out of the question in the country districts and villages, and even in the towns and smaller cities the railroad stations are frequently so far removed from the other sections of the town, that the lines do not reach them. So the only recourse was the kerosene lamp.

There is something about a kerosene lamp around a railroad station that arouses the ire of the traveler the moment he approaches. It may not be the lamp's fault, entirely. Station agents, as a rule, do not take kindly to cleaning chimneys and trimming wicks and filling the lamps from a greasy oil can, and so they neglect the lamp. Night after night the chimney gets a little more grimy, the wick a little more crisp, the supply of fuel a little lower and the light a little more feeble. No, it is not the fault of the kerosene lamp entirely, for, like Topsy, it was "made dat way." It can't be blamed for requiring so much attention. It is doing the best it can; but in the case of a public waiting room, the best a kerosene lamp can do is not good enough, and a number of years ago the Germans discovered the many advantages of denatured alcohol as a lighting fuel. A burner was patented which generates gas as the alcohol is fed into it from the lamp fount. The ordinary gas flame gives a light equal to ten candles, more or less. By using a mantle, the actual light is increased four or five times, and its quality, steadiness and color greatly improved. Thus one alcohol lamp produces a light of 45.2 candle-power, the equivalent to four or five gas jets, or three ordinary incandescent electric lights.

The Americans readily perceived the advantages of denatured alcohol, but the tax of $2.08 a gallon imposed by the Government made its use practically prohibitive. Recently, however, this tax has been removed, and Pyro or denatured alcohol is sold to-day at popular prices; or, in other words, it is cheaper to-day to burn denatured alcohol than to burn kerosene, in proportion to the amount of light used (in candle-power).

But the greatest advantage of the alcohol lamp, particularly in a railroad station, is that it takes care of itself.

*From a paper read before the Western Railway Club.

The station agent can neglect it all he sees fit, but, like a twinkling star, it will wink back at him, and keep on burning just as brightly as ever. All it asks is that the fount be kept filled, an operation requiring about a minute's work. True the lamp has a wick, which feeds the fuel to the burner, but it never comes in contact with the flame, and therefore requires no trimming. Alcohol is absolutely smokeless and the lamp chimneys will continue clean week after week. Mantles used for twelve hours every night, frequently last for six months, so that the only attention the lamp requires in all that time is the refilling.

Most of us know how familiar is the odor of the kerosene lamp. The atmosphere of the railway station reeks with it as the fuel oozes from the fount, and the smoke ascends from the chimney. Pyro, in addition to being smokeless, is as odorless as an electric bulb. And somewhere about the station, usually in a conspicuous place, is the well-known oil can. A great, greasy circle on the floor gives mute testimony of its whereabouts, and the fumes that arise add their corroborative evidence. There's nothing like that from the alcohol can. Alcohol does not ooze out, and if it did, it would evaporate. If, by chance, any is spilled upon the floor, it merely disappears. If spilled upon the finest fabric, it cleanses.

Not alone inside the waiting room, but in front of the station the alcohol lamp does yeoman service. A specially constructed lamp, with inverted mantle, gives a strong, steady white glow of 65 candle-power. Neither wind nor rain nor storm affects it, and it requires absolutely no attention except that the fount be kept filled. The regulation arc light is also made, which is particularly adapted for railway stations and used extensively for that purpose in Germany. The smaller ones give a light of 150 candle-power, while the larger ones have a brilliancy of 300 candle-power.

Possibly one of the most interesting features of denatured alcohol is the lighting system. And it is worth while to mention in passing that Kaiser Wilhelm's palace is lit with denatured alcohol lamps; also piazzas, hospitals and railway stations, and on some of the important streets in the German capital city denatured alcohol is very extensively used for lighting purposes, and has many advantages. If used in a closed room it consumes only a small portion of the oxygen that the same power kerosene lamp does. It is absolutely smokeless and odorless, besides being antiseptic.

The relative economy of denatured alcohol for illuminating purposes is clearly established by the official report of the Electrical Testing Laboratories of New York City, the recognized authorities in the United States for testing the candle power and rate of consumption of all kinds of lighting apparatus.

This report sets forth in detail the results of a test to determine the candle power and rate of fuel consumption of our household incandescent-mantle alcohol lamp-burner and a round-wick center-draught kerosene lamp (widely advertised as the most efficient and economical lamp on the market). The following is a summary of the official report of the electrical testing laboratories:

Description.	1 Gal. will last.	Av. Candle Power.	Candle Power Hrs.
Alcohol burner	38 hrs., 30 min.	45.2	1,740
Kerosene lamp	32 hrs., 42 min.	14.8	484

The candle power hours are obtained by multiplying the average candle power by the time required to consume one gallon. Thus, for illustration, the candle power hours obtained from one gallon of denatured alcohol were 1,740, which means that if the alcohol burner had been one candle power capacity, one gallon of denatured alcohol would have burned for 1,740 hours.

Since only 484 candle powers of light were obtained from one gallon of kerosene, it is manifest that over three and one-half times as much light may be obtained from one gallon of denatured alcohol as from one gallon of kerosene.

Therefore, for lighting purposes:

One gallon of alcohol at 60 cents a gallon, is as cheap as kerosene at 18 cents a gallon.

One gallon of alcohol at 55 cents a gallon, is as cheap as kerosene at 16 cents a gallon.

One gallon of alcohol at 50 cents a gallon, is as cheap as kerosene at 15 cents a gallon.

One gallon of alcohol at 45 cents a gallon, is as cheap as kerosene at 13 cents a gallon.

The cost to operate the household denatured alcohol lamp burner No. 201, which, as certified to by the Electrical Testing Laboratories, yields 45.2 candle powers of light and consumes one gallon of denatured alcohol in 38½ hours, would be:

Alcohol at 60 cents a gallon would cost less than 1 6-10 cents per hour.

Alcohol at 55 cents a gallon would cost less than 1½ cents per hour.

Alcohol at 50 cents a gallon would cost less than 1 3-10 cents per hour.

Alcohol at 45 cents a gallon would cost less than 1 2-10 cents per hour.

Denatured Alcohol in Dining Cars.

It is worth while to mention the fact that there has been considerable progress made in cooking with alcohol in the last few years. Many thousands of stoves have been sold, most of them for domestic purposes, and some for marine use. The stove is built on the type of the ordinary gas hot plates, with one, two or three burners. In fact, it can be made in any form required, and take the place of any other cooking range. It certainly eliminates all the trouble that a coal stove gives to a house-wife on a hot day. The expense to operate these stoves is very small; efficiency considered, the cost is not greater than other fuels. Recently the Pullman Company has adopted and use denatured alcohol stoves in its broiler and buffet cars, and is making quite a success of them. The writer has, on many occasions, investigated the efficiency of these stoves and found that the alcohol stove is considered superior to the gas stoves, which they had previously used. Leading concerns at the present time are selling cooking appliances, using denatured alcohol as fuel, and they are experimenting with the alcohol devices, and it is a matter of but a short time when alcohol will be used generally in the railroad cars, for the reason that it is more efficient and affords a greater element of safety. The reservoir tanks can be recharged at any terminal, and it is easier to obtain alcohol than gas.

Denatured Alcohol for Refrigerator Cars.

There is a growing demand which is being felt by all the railroads for a heated freight car for the protection of perishable products during the extreme winter weather, and there are a number of stoves on the market, burning different kinds of fuel, and which are being used for the purpose of heating freight cars. But in answer to a general demand to meet the requirements of the railroads, it is necessary to furnish a heater that will operate automatically and without requiring an attendant to go with each car or train; to furnish a heater that will burn continuously for a period of a week or more without attention; to furnish a heater that is automatically regulated by a thermostatic instrument, and a heater burning a fuel where the products of combustion can be used as a heating agent, without any liability of damage to the most delicate eatable products.

Such portable heaters are now on the market, using denatured alcohol. They have been in test, in actual service,

for more than a year; have been examined and approved by a number of railroad officials.

This heater is used as a gravity feed burner. Wicks and hand manipulated valves are entirely eliminated. They are regulated automatically, and will burn for a period of ten days without attention, as the burning of denatured alcohol does not require the admission of any free air into the car to support combustion, as the air is not vitiated to any appreciable extent, and the products of combustion are used as a heating agent. It does produce antiseptic conditions. There is no smoke or soot, therefore it seems to be the ideal fuel to use in the cars for the protection of eatable products.

This heater is made in two sizes, single and double burners, and can be applied to any car by setting it on the floor at the door, or by placing it in the ice box at the end of refrigerator cars.

DEVELOPMENT IN RAILWAY ELECTRICAL APPARATUS DURING PAST YEAR.

During the past year, considerable progress has been made in the development and improvement of electric railway apparatus. The increase in the number of applications of the single-phase system has been particularly noteworthy. The latest single-phase locomotive built by the Westinghouse company is equipped with four driving axles, and has eight motors, there being two single-phase motors geared to a quill surrounding each axle. This arrangement, which at first appears more complicated, is in reality, a lighter, cheaper and more simple construction than that involving four motors of the same total capacity.

Most of the troubles on pioneer single-phase railways were due to operation at abnormally high speeds, at speeds higher than those for which the equipments were designed. These high rates of speed were possible because the line voltage was always good and because the transformers were usually supplied with overvoltage taps. Furthermore, the motors had very steep speed characteristics, which permitted them to reach a higher speed than would be possible with a direct-current motor with the same gear ratio. This source of trouble is now eliminated in Westinghouse equipments by the use of an overspeed relay, which is electrically operated, and is controlled by the current and voltage applied to the motor through the control circuit. When the speed of the motor reaches a certain predetermined limit, the control circuit is opened on the higher notches of the controller. This makes it impossible to operate the cars above the limit unless there is a long stretch of downgrade, which is unusual on interurban lines. In any event, excess speeds are possible only when there is no power on the motors. This method of protection might safely be applied to direct-current motors, since extremely high speeds are not only dangerous, but in nearly all cases are unnecessary. High speeds are a source of expense because of the extra energy consumption involved, as well as because of the increased wear and tear of equipment.

The Westinghouse Electric & Manufacturing Co. has secured a contract for the entire equipment of one of the largest electric railway systems in the south. It will use 1500-volt direct-current apparatus. This voltage is considerably higher than that of any direct-current line of the present day, since 1,200 volts has been the highest pressure heretofore used. Standard types of interpole motors, especially arranged for operation on 1,500 volts, with two motors permanent connected in series, will be used.

One of the improved devices designed for service on 1500-volt, direct-current systems is a special dynamotor. This drives the compressor by means of a friction clutch of the standard automobile type, which is automatically cut in or out when the air reaches certain pressure limits. The dynamotor for high voltage lines, as heretofore arranged, furnished power for the control and lights, but with the Westinghouse system it serves also to operate the compressor, eliminating the necessity of a separate motor therefor. The dynamotor is so arranged that it will operate at normal speed on either 600 or 1200-volt lines. This allows the air compressor to perform its duty much more effectively than is possible where ordinary compressor motors are used which operate at normal speed on 1,200 volts and at half speed or less on 600 volts.

The use of forced ventilation to increase the capacities of railway motors has been thoroughly tried out on a large scale, and it has been conclusively demonstrated that its use will enable a motor to operate at a much higher continuous rating than would otherwise be possible. One method of applying forced ventilation is unique. A small motor-driven blower, with a fan on each end of the armature shaft, is mounted underneath the truck holster. Each fan furnishes air to the one motor. The air is taken from some distance up the side of the car so as to avoid, so far as possible, the introduction into the motor of dust and dirt from the roadbed. Forced ventilation has been used quite commonly for some years for locomotive motors, but it is only recently that forced ventilation has been so widely applied to car motors.

The success of field control on locomotives has been so encouraging that the Westinghouse Company decided to apply it for the control of the ordinary street car motors, for both slow speed city and high speed interurban service. The advantage in slow speed city service is that the motors may be wound for a very low speed with full field, which insures a minimum of operation on resistance, and with normal field it is possible to operate a car at higher speeds with less resistance when it reaches the suburban sections of the line. Field control virtually produces a high speed equipment which has an extremely small rheostatic loss in starting. The saving in power may be considerable, the exact amount depending on the amount that is ordinarily lost in the resistance. There is also saving in weight, as a decreased resistance loss means that there is less resistance to carry, and in many cases the motor is also lighter.

The advantage of Westinghouse field control in interurban service is largely due to the fact that the cars may be started with much smaller accelerating currents, and that they are therefore better adapted for local service. Yet it is possible by means of the field control, to operate the local cars in limited service at high speeds. Ordinarily, where direct-current cars are used interchangeably in local and limited service, either one or the other class of service must, necessarily, be somewhat slighted, or the equipments would be badly overworked. Through the use of field control this contingency is avoided. Heretofore the same car could not be operated successfully in both local and limited service, as two different gear ratios were required. With field control different gear ratios are not necessary, since the operation with the normal field permits the motors to run the cars at slow speeds in city streets and also to run them at speeds necessary for first-class, interurban, limited service. This system of field control may be used with either the multiple unit or hand control.

Marked progress has been made in the application of multiple unit control for the past year. The Westinghouse "HL" control has been well received, since it meets the demand for a single effective control, that will replace the hand platform control without any material increase in either cost or weight. In many cases the weight with "HL" control is even less than with hand controllers. The operating man favors this form of control, for he recognizes the advantages of a control wherein heavy currents are not handled on the car platform. In "HL" control the number of interlocks is reduced to such an extent that cost of maintenance will always be very low.

Personals

P. A. Crysler has been appointed a master car builder of the Canadian Pacific at Montreal.

C. H. Temple succeeds Grant Hall as superintendent of motive power of the Canadian Pacific, with office at Winnipeg.

C. H. Temple, S. M. P., Canadian Pacific Ry.

The office of J. S. Booth, master mechanic of the Carolina & North-Western, has been moved from Chester to Hickory, S. C. The stores and general shop are also now located at Hickory.

A. B. Enbody has been appointed assistant master mechanic of the Central R. R. of New Jersey, with office at Mauch Chunk, Pa.

F. J. Walsh succeeds H. M. Brown as master mechanic of the Chesapeake & Ohio at Hinton, W. Va.

N. J. Brooks succeeds R. J. McDonald as foreman of locomotive repairs of the Chicago & Alton, at Bloomington, Ill. Mr. McDonald has been made road foreman of engines with office at Bloomington.

J. F. Deems, Pres., Ward Equipment Co.

J. T. Lord succeeds W. O. Morton as locomotive foreman of the Chicago Great Western at Minneapolis.

M. W. Burrows succeeds H. W. Martin as foreman of car repairs of the Colusa & Lake. His office is at Colusa, Cal.

J. F. Prendergast, for many years with the Baltimore & Ohio, is now master mechanic of the East Broad Top R. R. & Coal Co. with office at Orbisonia, Pa.

O. M. Cross has been appointed master mechanic of the Florida Ry., vice Chas. Schneider, office at Alton, Pa.

L. Grimes has been appointed master mechanic of the Illinois Central at Jackson, Tenn.

O. E. Berry has been appointed assistant master mechanic of the Lake Erie & Western, vice W. T. Kuhn, with office at Lima, O.

I. Latham succeeds F. W. Johnston as master mechanic of the Nevada Copper Belt, with office at Mason, Nev.

T. R. Cook, formerly master mechanic of the Pennsylvania Lines West at Wellsville, O., has been promoted to assistant engineer of motive power at Pittsburgh. He is succeeded at Wellsville by P. T. Dunn, formerly master mechanic at Chicago. M. A. Le Mar is appointed master mechanic at Chicago.

J. W. Lowery has been appointed master mechanic of the Tombigbee Valley, vice J. B. Shaw, with office at Valvert, Ala.

W. G. Lamb succeeds W. Hartleif as master mechanic of the Waterloo, Cedar Falls & Northern, with office at Waterloo, Ia.

H. C. Manchester, formerly superintendent of transportation of the Maine Central, has been appointed superintendent of motive power of the Delaware, Lackawanna & Western, vice T. S. Loyd, resigned. Office at Scranton, Pa.

J. F. Deems, whose resignation as general superintendent of motive power of the New York Central Lines was announced in the November issue of the *Railway Master Mechanic*, was born at Brownsville, Pa., in 1856. He graduated from the South Western Institute of Pennsylvania and after a brief period of service on the Baltimore & Ohio he entered the service of the Burlington as a machinist at Beardstown, Ill. He rose through successive stages to the position of master mechanic and in April, 1900, was appointed assistant superintendent of motive power of the Burlington. In June, 1901, he was made superintendent of motive power, which office he resigned on March 1, 1902, to become general superintendent of the American Locomotive Co., at Schenectady, N. Y. In December, 1902, he was appointed to fill the new position of general superintendent of motive power of the New York Central Lines, which position he now leaves to become president of the Ward Equipment Co. of New York. The latter firm is engaged in handling car heating and ventilating systems.

With Mr. Deems' resignation the office of general superintendent of motive power has been discontinued and the mechanical heads of the various roads will hereafter be directly responsible for their organization.

Wm. Boughton, who recently resigned his position as general master mechanic of the Pere Marquette, has an interesting history of faithful service in the interests of one railway—the Pere Marquette. He started in 1877 as a call boy and was soon placed in the Saginaw shops as an apprentice, in which capacity he served for three years. Eight months in train service as a brakeman followed by service as a fireman ended Dec. 18, 1882. He was at this time promoted to engineer, in which capacity he worked until Nov 9, 1888, when he was promoted to the position of road foreman of engines. Jan. 25, 1904, he was made assistant master mechanic, with headquarters at Saginaw, Mich. In Oc-

Wm. Boughton.

tober, 1909, he was promoted to the head of the mechanical department with the title of general master mechanic, which position he resigned Oct. 8, 1911. Mr. Boughton is now a middle aged man with every prospect of a most useful future. At this time his intention is to take up industrial work, but it would not bring credit upon the "powers that be" in railway circles if his services are not retained. His success as the head of a large mechanical organization is unquestioned.

Bruce W. Benedict, for several years in the Motive Power Department of the Atchison, Topeka & Santa Fe Railway, and at one time editor of the *Railway Master Mechanic,* has been appointed director of the shop laboratories in the department of mechanical engineering at the University of Illinois. Mr. Benedict was born in Buda, Ill., in December, 1876. He graduated from the University of Nebraska with the class of 1901. He served an apprenticeship on the Chicago, Burlington & Quincy R. R. prior to entering college, and after graduating he occupied successively on the same railroad the following positions: machinist, assistant in testing laboratory, assistant road foreman of engines, road foreman of engines, general foreman of locomotive and car repairs, and mechanical inspector. He left the Chicago, Burlington & Quincy R. R. to become an editor of the *Railway Master Mechanic*, of Chicago, a position which he held for two years. Leaving Chicago, he became supervisor of schedules on the Atchison, Topeka & Santa Fe Ry., and still later bonus supervisor on the same road, which position he will give up before the first of the year to assume the duties at the University of Illinois to which he has been appointed.

OBITUARY.

Willis Chapman.

It is with genuine regret we announce the accidental death of Willis Chapman, chief joint car inspector of the New York Central & Hudson River and Pennsylvania Railroads at Canandaigua, N. Y., on October 12th. While Mr. Chapman was in the performance of his duties he was caught between a freight car and freight platform in the New York Central yards and almost instantly killed, his death resulting while being taken to the hospital. He had a very wide circle of personal friends who will feel keenly the loss sustained. Mr. Chapman was born near Bath, N. Y., December 26th, 1856, and united with the Baptist church of Wayne in 1876. On December 5th, 1877, he was married to Miss Mary Eveland. He was possessed of a sterling character and universally esteemed and respected by all who knew him. Mr. Chapman has been a member of the Chief Interchange Car Inspectors' and Car Foremen's Association of America for several years, and always took an active interest in the association and its welfare. The funeral services were attended by the following members of the Association: T. J. O'Donnell, Buffalo, N. Y.; F. Deyot, Buffalo, N. Y.; T. Donohue, Rochester, N. Y.: C. W. Thompson, Dewitt, N. Y.; James Scott, Geneva, N. Y.; F. X. Schuler, Auburn, N. Y.; Jos. Westervelt, Rochester, N. Y. Mr. Chapman is survived by his wife and daughter, Mrs. Hovey Griswold of Syracuse, N. Y., also two brothers, Rev. Adelbert Chapman of Hackensack, N. J., and Frank Chapman of Williamsport, Pa.

John J. Ryan.

John J. Ryan, superintendent of motive power of the Galveston, Harrisburg & San Antonio, Morgans' Louisiana & Texas, and the Texas & New Orleans, died November 20 of rheumatism, coupled with other complications. Mr. Ryan was born at East Boston, Mass., in 1849, and has been connected in various capacities with the Southern Pacific lines

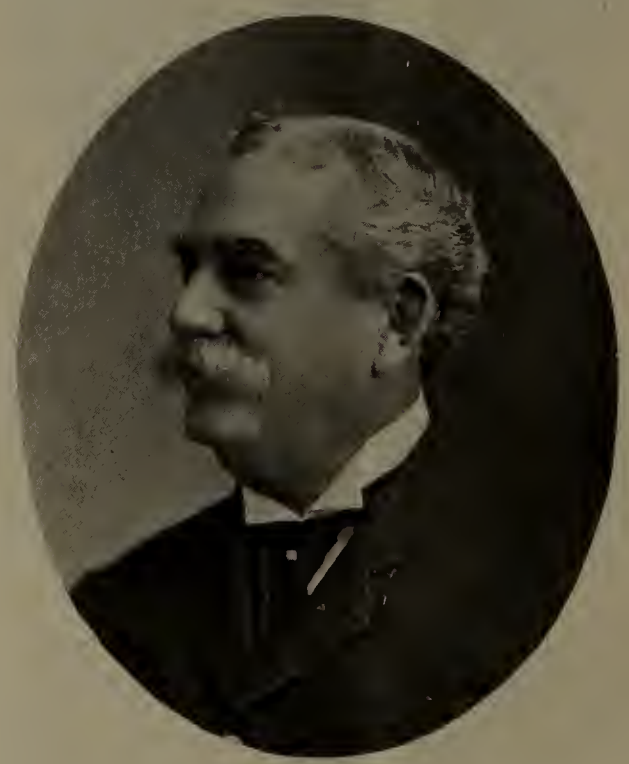

John J. Ryan.

since 1877. He has held his present position since 1895. His death was sudden and comes as a shock to his many friends who express nothing but praise for his character as a man and his ability as a railroad official.

George W. Hebard.

George W. Hebard, acting vice president of the Westinghouse Electric & Mfg. Co., died at his home in New York City, on Friday, November 17th. Mr. Hebard was born in Barre Center, Olean County, New York, in 1845, and was, therefore, 65 years of age. He had been in poor health for some time previous to his death.

Besides his active participation in his chosen profession, Mr. Hebard was also very active in social, religious and philanthropic work in New York. He was a member of the Tompkins Avenu Congregational Church; having been superintendent of the sunday school for some time. He was a man of genial disposition, keen judgment, and a business man with a wonderful grasp of affairs. He was a member of the Union League, The Lawyers', The Engineers,' and several other clubs.

Mr. Hebard leaves, residing in New York, a wife and two children; Charles R., engaged in the cotton business; Arthur,

engaged in the ammunition business, in which his father was engaged prior to entering the electrical profession. Mr. Hebard was sole executor of the Marcellus Hartley estate, which owned the Union Metallic Cartridge Co. and the

Geo. W. Hebard.

Remington Arms Co., all of which he settled in a most satisfactory manner to all concerned.

The death of Mr. Hebard has removed from the electrical profession one of the pioneers of this industry. He was indentified with the early history of the manufacture of electrical apparatus, becoming president of the United States Electric Lighting Co., of Newark, in 1882, and had associated with him, as directors, Marcellus Hartley, Anson Phelps Stokes, Charles R. Flint, Henry B. Hyde, Charles F. Brooker, Leonard Curtis, and other well known men. Mr. Hebard was connected with the early history of the generation and distribution of electric lighting in New York City as a director and stockholder of the United States Illuminating Company. In this position he had to do with the equipment of the Weston lighting system on Brooklyn Bridge, parts of which are still in service. Later, as president of the United Electric Light & Power Company, he was closely affiliated with the introduction of the Westinghouse alternating current system in New York City by means of the overhead system. He was active later on in the change of the distribution system from the overhead to underground. The improvement of the system of distribution from the standpoint of the manufacturers of the current was also one of his most successful labors. At the time the United States Company was taken over by the Westinghouse Company, Mr. Hebard was president of the United Company, and in the re-organization was made Vice President of the Westinghouse Company, and, in 1888, when this company took over the Sawyer-Man Company, Mr. Hebard was given charge of the newly acquired organization.

The death of Mr. Hebard is the third one to occur in the last few months among the higher officials of the Westinghouse Electric & Mfg. Co., residing in New York, the others being Mr. Edward St. John, treasurer, and Mr. Robert Mather, chairman of the board of directors, the latter's death a few weeks ago having been a great shock to his wide circle of acquaintances.

Among The Manufacturers

"FENESTRA" STEEL WINDOW SASH.

The accompanying illustrations show an interesting application and the details of steel sash construction as manufactured by the Detroit Steel Products Co., Detroit, Mich., under the trade name, "Fenestra." In the past three years this name has become fairly familiar and a description of the construction may prove interesting.

"Fenestra" solid steel window sash is manufactured from specially rolled solid section and the composition of the material is such that the window has at once the strength of steel and the weather resisting qualities of iron. Because of the strength of the joint, it is possible to use sections that will permit the delivery of 25 per cent more light through a given opening than heretofore available. No frame, sash weights, heavy mullions, etc., are required. The cost of steel windows is thus reduced to a minimum. The construction is equally strong against wind from without and pressure from within; the latter quality is important in case of fire.

The "Fenestra" joint is shown in one of the illustrations. A slot is first punched in the web of the vertical muntin wide enough to allow the web of the horizontal member to pass. The head of the vertical bar is then pressed so that its inner surface has the same curve as the outer

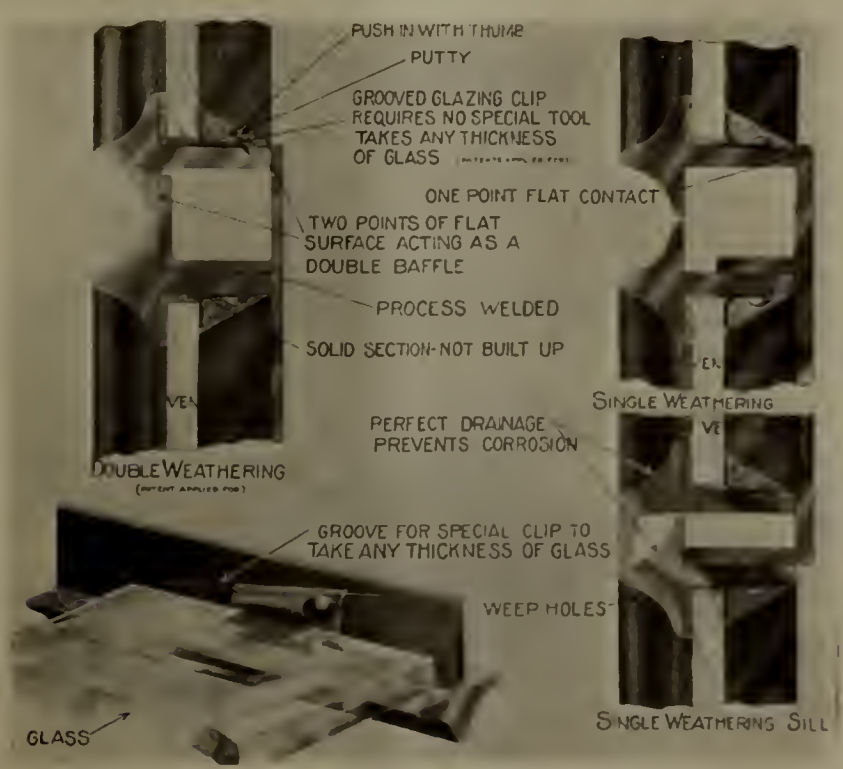

Details of Fenestra Sash Construction.

Section of Roundhouse Showing Fenestra Sash Equipment.

surface of horizontal muntin. The locking wing is then opened to such distance as to clear the horizontal muntin. The horizontal muntin has only a small notch which acts as a lock against any side movement. To assemble this joint, the horizontal muntin is slipped through the vertical and the locking wing forced in place. It will be readily seen that the amount of material removed is thus exceedingly small. It is not possible to construct a mitre joint unless 50 per cent of the material is removed.

Each unit is complete in itself with individual operating device. The ventilators are fitted with a peg and stay, the latter being so arranged as to allow different degrees of opening. The stays are forged and not pressed metal. When two ventilators are in one unit, one above the other, a connecting bar is furnished so that they work from a single peg and stay. Ventilators beyond convenient floor distance will be equipped, if so specified, with a spring catch without extra charge. When it is desired to operate a long line of ventilators from one station as in monitor sash, a mechanical device is furnished at a slight extra charge.

HUNTER INSERTED TOOTH SAW BLADE.

The accompanying illustration shows a recently perfected duplex inserted tooth saw blade, manufactured by the Hunter Saw & Machine Company, Pittsburg, Pa. This blade is de-

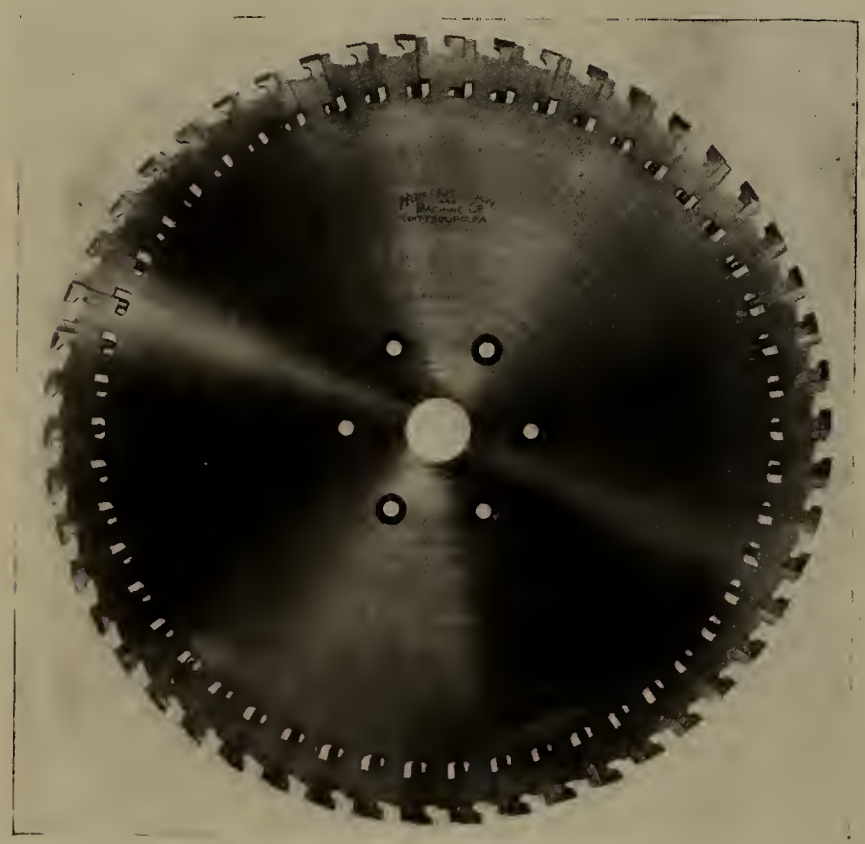

Hunter Duplex Saw Blade.

signed for cutting forgings, steel castings, bars, rails, frogs and switches, etc., and is manufactured in sizes ranging from 6 in. to 84 in. in diameter any thickness most practical for the kind of material to be cut.

The body of the blade is made of the best grade of vanadium alloy tool steel, while the teeth are made of the finest grade of high speed steel obtainable for metal cutting and are properly hardened and treated.

The teeth are secured by interchangeable tool steel wedges, lowered to brass adjusting screw. The roughing or round tooth is adjusted higher than the finishing or flat tooth, so that a parting cut can be made taking the remaining portion of material with the flat or finishing tooth.

Recent tests have been made with a 30-in. blade, wherein 1,275 cuts were made in 65½ hours on .61 carbon steel splice bars at a lateral feed of nine-sixteenths inch per minute, bars being piled four high.

A 40-in. blade cutting .45 carbon round bars of hammered machinery steel gave the following results:

12 -in. diameter,	5 minutes.	
9 -in. diameter,	3 minutes.	
6½-in. diameter,	1 minute 30 seconds.	
6 -in. diameter,	1 minute 22 seconds.	
5 -in. diameter,	1 minute.	
3½-in. diameter,	35 seconds.	

PRACTICAL WASHING MACHINE FOR THE SHOP.

The Kalamazoo Washer Co. of Kalamazoo, Mich., is introducing a washing machine which does away with hand-rubbing and which will wash greasy overalls, jumpers or any shop clothes with minimum effort. It is constructed of

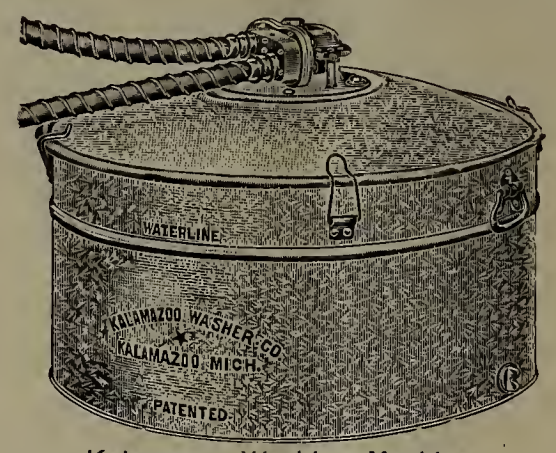

Kalamazoo Washing Machine.

heavy galvanized iron and is practically indestructible. It consists of a tub with a removable corrugated lining, a dome-shaped cover fitting tightly, and an agitator shaft with two wood wings attached.

The power may be either hand or motor, as desired. The illustration shows the device arranged for operation by water motor.

By the action of the agitator a vacuum is created which draws the clothes against the rubbing surface and at the same time forces the air and soap solution through the fabric. The manufacturers claim that it will wash the finest fabric without injury.

New Literature

The Carnegie Steel Co., of Pittsburgh has issued a booklet on "Heat Treated Axles, Shafts and similiar parts." It contains results of experimental tests and is well illustrated.

* * *

A folder dealing with "Scott" adjustable car window screens has been distributed by the American Car Screen Co., of Pittsburgh, Pa.

* * *

The Ingersoll-Rand Co., of New York, has issued one of its standard forms (No. 4003) descriptive of "Little Giant" rock drills.

* * *

Bulletin 22 of the Coates Clipper Mfg. Co., Worcester, Mass., consists of 66 pages devoted to electric drills, grinders, polishing outfits and chipping hammers. These tools are all supplied with "Coates" flexible shafts.

* * *

Burton W. Mudge & Co., Chicago, have issued another of their attractive booklets, this one having to do with the Garland heating and ventilation system for refrigerator cars.

* * *

A catalogue on furnaces for heating, forging and welding, has been published by Tate, Jones & Co., of Pittsburgh, Pa. A variety of blacksmith and rivet forges and also a flue

welding furnace are shown. Larger heating furnaces for oil or gas fuel are described and the catalogue as a whole is very creditable.

* * *

Catalogue number 2 entitled "Couplers and parts" has been issued by the National Malleable Castings Co., of Cleveland. A number of very good phantom views are given showing the operation of the Sharon coupler. It also shows all of the sizes, and styles of shanks for use on freight and passenger cars, pilots and tenders, together with illustrations of all of the parts of each of these couplers and catalog numbers for same.

* * *

The Detroit Steel Products Co., of Detroit, in its latest catalog gives complete information regarding "Fenestra" steel window sashes which is well worthy the attention of anyone interested. It gives complete dimensions and details which will enable building plans to be laid out for "Fenestra" sashes.

* * *

Catalogue 252 has been issued by the H. W. Johns-Manville Co., of New York, and is a complete catalogue of asbestos magnesia and electrical railroad supplies handled by this firm. It is gotten up in book form, is attractively bound in cloth and contains 342 pages. A complete index of all products is included at the rear.

* * *

The Okonite Company, 253 Broadway, New York City, has published an attractive booklet entitled, "Economy in Joint Making, With Instructions." It contains information which should be very much in demand at this season of the year as now is the time to make repairs in the way of insulating and protecting joints so that short circuits, with their accompanying troubles, may be avoided during the winter to come.

Industrial Notes

The Alvey Bros. Machinery Co., St. Louis, has been organized by Gus Alvey, P. C. Alvey and others, of Elizabethtown, Ky., for the manufacture of conveying machinery.

Allens Nut Lock Co., has been incorporated at New Orleans, La., by Oglesby Allen, Jr., president, Joseph G. Allen, vice-president, and Francis Allen, secretary-treasurer.

L. R. Pomeroy has opened an office as consulting engineer at 50 Church street, New York. He is prepared to design railway and industrial plants, to advise as to the rehabilitation of shops, to analyze machine tool operation with reference to electric and effective operation, and to make reports and appraisals of railway and manufacturing properties. Mr. Pomeroy has been chief engineer of the railway and industrial division of J. G. White & Company, New York, assistant to the president of the Safety Car Heating & Lighting Company, New York, special representative in the railway field for the General Electric Company, Schenectady, N. Y., and assistant general manager of the Schenectady Locomotive Works.

The Verona Steel Castings Co. has applied for a charter at Pittsburg, Pa., and will engage in the manufacture of steel castings. The incorporators are: J. M. Hansen, William Bierman and E. E. Jones, who are officers of the Standard Steel Car Co. This company owns a plant at Verona, Pa.

The National Boiler Washing Co., has been given a contract for the boiler washing system in a new round house to be constructed by the Lake Shore & Michigan Southern at Englewood, Chicago.

The Cleveland Construction Company, Cleveland, Ohio, has placed an order with the Westinghouse Electric and Manufacturing Company for two quadruple equipments of 307 motors and K-35 control.

Edward C. Brown, manager foreign department, Dearborn Drug & Chemical Works, after spending the last two years in the Orient, has just returned to Chicago. Through his endeavors a branch office was established in the Philippines, and agencies covering Japan, Formosa, Korea, and China, have been established. Many of the principal railways in China and the Philippines are using Dearborn water treatment while tests are being run on the Japan lines.

F. R. Fortune, district sales manager for Cooper-Hewitt Electric Co. has resigned to take effect Jan. 1, 1912. Mr. Fortune goes to Texas (Ft. Worth) to engage in private business. He was oldest in point of service in the Cooper-Hewitt Co. sales department.

The Kerr Turbine Co., Wellsville, N. Y., advises that over 700 of their machines, aggregating more than 50,000 horsepower, are in active service and that more unfilled orders are now booked than at any previous time in the history of the company. Although their plant has been materially enlarged, a night shift has been necessary for the past two and a half years. Among recent orders are the following: One 350-kw. turbo-alternator for the Brooklyn Refinery of the Standard Oil Co.; two 2,800 gal. per min. turbo-pump units for Tidewater Oil Co.; two 75-kw. and one 35-kw. lighting sets to American Shipbuilding Co. for the new steamer "City of Detroit"; two 75-kw. lighting sets for water works service, City of Chicago.

The Pacific Mills at Lawrence, Mass., have recently placed an order with the Westinghouse Electric & Manufacturing Company, East Pittsburg, Pa., for one 30-panel marble switchboard for controlling several 2,300 volt alternating-current generators, and also one 6-panel switchboard for the control of several heavy capacity direct-current generators. These boards are in addition to boards previously purchased from the Westinghouse Companies, and are to take care of the increased load on the plant handled by this company.

The Elaborated Ready Roofing Co., 693 Broadway, Buffalo, N. Y., has purchased a site on Chandler street and the New York Central & Hudson River R. R. belt line, near Manton place, and will build a plant for the manufacture of roofing materials.

The New York, New Haven & Hartford is having 21 locomotives of various type, including Pacific, Atlantic, ten-wheel, and mogul, fitted with superheaters for experimental purposes. The Locomotive Superheater Company, New York, will furnish the superheaters.

The Triumph Electric Company, of Cincinnati, Ohio, have recently opened a district office at No. 2219 Farmers' Bank Bldg., Pittsburg. D. D. Gill will be in charge of the new office. The Remy Electric Company, of Anderson, Ind., which recently absorbed the American Electric Headlight Co. and which now makes the American electric headlight for steam locomotives, has purchased outright all patents, designs, good will and manufacturing rights of the Peters electric headlight for steam locomotives.

Recent Railway Mechanical Patents

GRAIN DOOR.

1,009,046—Paul F. Busch, Cleveland, O.

A car having a door opening in its side and a guideway for the door beneath the car communicating with the opening, the door having a flexible toothed rack on its inside along each edge and extending below the lower edge of the door; a shaft having pinions is located in the angle between the guideway and the door opening, and a hand controlled shaft controls the door, whereby the door can be raised in the opening with its lower edge above the floor of the car and a space is provided through which the car can be unloaded.

DEVICE FOR SUPPLYING ENGINE TENDERS WITH WATER.

1,009,072—R. W. Johnson, Springfield, Neb.

This device is the combination with an engine tender, of a track arranged above the same, a dumping bucket supported to move upon the track, a source of supply for the bucket, means to control the source of supply to the bucket by the amount of water in the bucket, means controlled by the engineer for dumping the water from the bucket into the tender and moving the same along the track with the tender, means to raise the bucket out of the path of the moving device, means for returning the bucket to normal after the contents have been dumped, and means operated upon the return of the bucket to refill the same.

TRUCK FRAME.

1,009,112—V. M. Summo, St. Louis, Mo.

In a car truck, a bolster, side frames provided with openings to receive the ends of the bolster, and channel beams connected at their ends to the sides of the openings and having their webs in vertical planes, the channel beams having a comparatively narrow central portion and flaring outwardly and downwardly at the ends.

CAR VENTILATOR.

1,009,135—Edward Day, Cleveland, O.

A car ventilator comprising a box having upper and lower oppositely inclined passages therein, longitudinal through passages communicating with the outer ends of the passages respectively, and dampers in the longitudinal passages.

EMERGENCY CAR COUPLING.

1,009,174—Edward Posson, Chicago, Ill., assignor to Grain Belt Car Specialty Co.

This device consists of a car body, a transverse beam exterior to the beam resting against the end of the car body, an emergency coupling head, means for attaching the coupling to the car body; emergency head has a horizontal web resting upon a part of the permanent head, a vertical web abutting against the transverse beam, and means securing the beam and temporary head together.

CAR DOOR HANGER.

1,009,221—Otto Butler, Pittsburg, Kan.

The combination with a car-door, of a hanger, stub-shafts carried thereby and arranged in triangular relation, rollers carried by the shafts and having angular peripheries, and a track embodying, in a one-piece structure, a web and a pair of flanges, the later having like-shaped grooves to be engaged by the rollers, the track being reversible so that should the groove in the lower flange become pitted from the vibrations of the door, a new guide groove will be presented to the lower rollers, by transposing the position of the track.

EMERGENCY AND STRAIGHT-AIR BRAKE.

1,009,286—J. S. Custer, assignor to the Westinghouse Air Brake Co.

In a combined straight air and emergency brake, the combination with a reservoir, train pipe, brake cylinder, and straight air pipe, of a brake valve for controlling the supply of air to the straight air pipe and having a chamber under reservoir pressure, from which air is supplied to the train pipe, and a reducing valve for limiting the pressure of air supplied to the straight air pipe.

CENTER BEARING FOR CARS.

1,009,306—J. J. Hennessey, Milwaukee, Wis.

The combination of a car truck and a car body, each provided with a center bearing plate, which have faces provided with annular ridge and groove portions adapted to fit each other, and a removable plate adapted to be interposed between the center bearing plates. The removable plate having one of its faces provided with annular ridge and groove portions similar to those on the truck center plate and has on its opposite side annular ridge and groove portions similar to those on the car body center plate.

BRAKE.

1,009,505—Frank Gostiner, Port Huron, Mich.

The combination with a car truck, of an axle journaled therein, wheels carried by the axle, a brake flange on the inside of each wheel, and braking mechanism comprising a band partially encircling the flange; friction brake shoes are carried by the band, and a suspender member is supported in the truck frame and has a central portion connecting the ends of the band; a spring encircles the central portion and normally forces the ends of the band apart; a brake bar extends between the brakes of the wheels and bears against the ends of the bands; means are provided for exerting a pull upon the bar to set the brakes.

1,009,072.

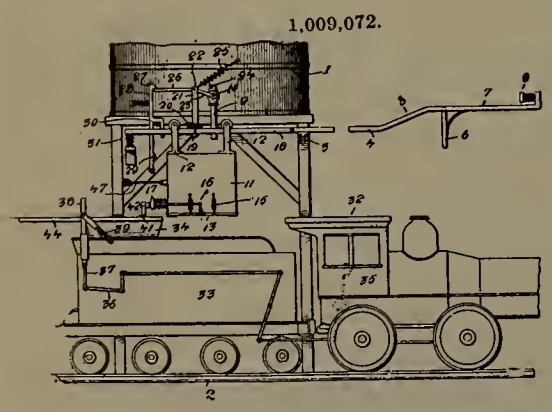

1,009,221.

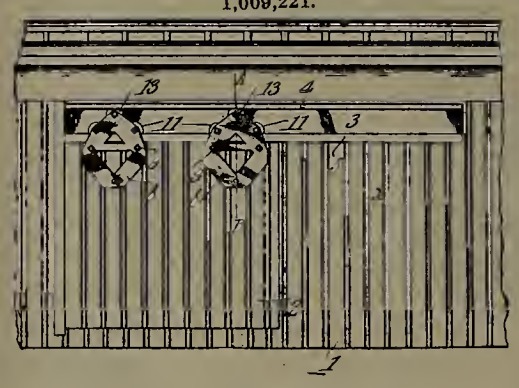

1,009,112.

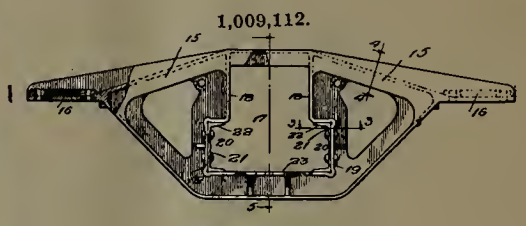

1,009,174.

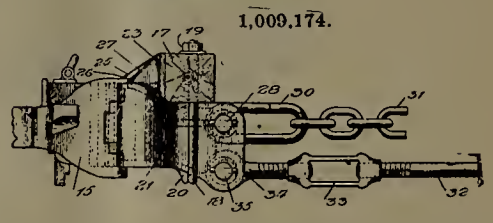

1,009,505

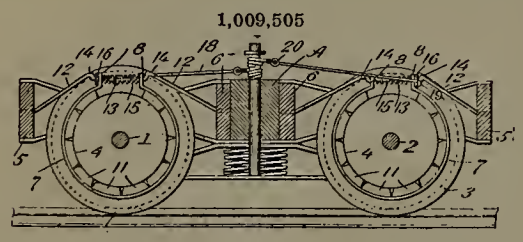

1,009,135.

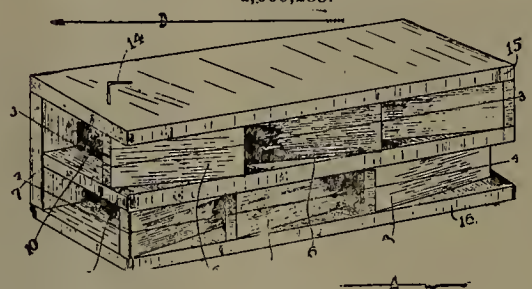

1,009,306.

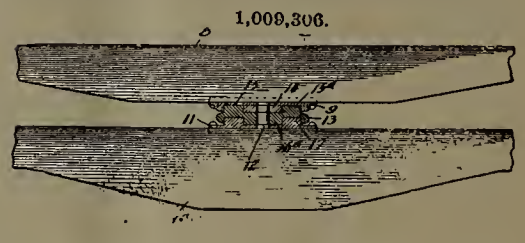

1,009,046.

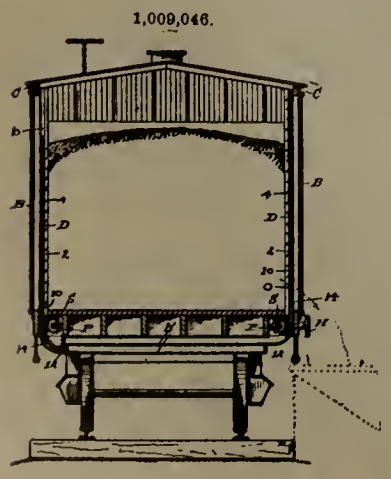

1,009,286.

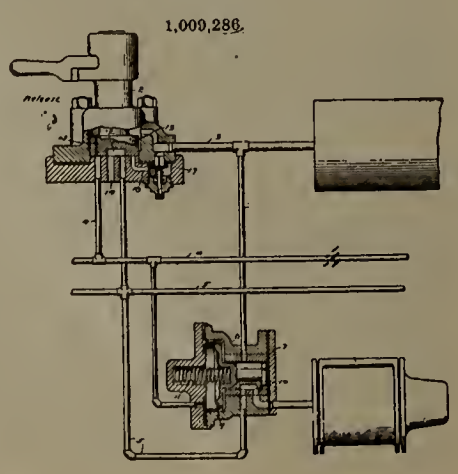

Motive Power.

The Georgia has ordered two six-wheel switching locomotives and two ten-wheel locomotives from the Baldwin Locomotive Works.

The Kinston Manufacturing Co., it is said has ordered one logging locomotive from the Baldwin Locomotive Works.

The Lorain Steel Co. has ordered one six-wheel switch engine from the Baldwin Locomotive Works.

The New York Central Lines have ordered 30 locomotives from the Baldwin Locomotive Works.

The Porto Rico Irrigation Service have placed an order with the Vulcan Iron Works, Wilkes-Barre, Pa., for one 8 x 14 in. special Forney type locomotive. This company has also received an order from the Warrior Black Creek Coal Co., Warrior, Ala., for an 8 x 12 in. saddle-tank locomotive and a 19 x 26 in. Mogul locomotive.

The Canadian Pacific has given an order for 1,000 steel frame box cars of 80,000 pounds capacity to the Western Steel Car & Foundry Co.

JUL 25 1966

Author 621.051 Shelf No. R15

Title Railway Master Mechanic

Edition Vol. 35. Year 1911

Date Borrowed	90520 SIGN HERE	Returned
May	Leon Chocolatier	
May 1	[illegible]	
	G. C. Rauch	

ENGINEERING LIBRARY
OF THE
Mass. Institute of Technology.

SIGN THIS CARD AND LEAVE IT at the desk.

NO BOOK shall be taken from the room EXCEPT WHEN REGISTERED in this manner.

Students must return books before 10 A. M. of the next school day, unless granted special permission to keep them longer.

RETURN this book to the DESK.

Form L-39-1000 30-Ja -'11